IN THE UNITED STATES DISTRICT COURT
FOR THE WESTERN DISTRICT OF MICHIGAN
SOUTHERN DIVISION

SOLMETEX, LLC,	)	Case No. 1:24-cv-00954-RJJ-MV
	)	
	)	The Honorable Robert J. Jonker
Plaintiff, Counter-Defendant	)	
	)	
v.	)	
	)	
	)	
ASCENTCARE DENTAL PRODUCTS, INC.,	)	
	)	
	)	
	)	
Defendant, Counter-Plaintiff.	)	

DEFENDANT'S INITIAL INVALIDITY CONTENTIONS

TABLE OF CONTENTS

I. INTRODUCTION 1

II. THE ASSERTED PATENTS 3

A. Utility Patents 3

1. United States Patent No. 11,589,969 (The ’969 Patent) 3

2. United States Patent No. 11,744,686 (The ’686 Patent) 4

3. United States Patent No. 11,589,970 (The ’970 Patent) 4

4. United States Patent No. 11,826,217 (The ’217 Patent) 4

5. United States Patent No. 12,011,329 (The ’329 Patent) 4

6. United States Patent No. 12,167,948 (The ’948 Patent) (Second Family) 5

7. United States Patent No. 12,290,418 (The ’418 Patent). 5

B. Design Patents 5

1. United States Patent No. D962,438 (The ’438 Patent). 5

2. United States Patent No. D962,439 (The ’439 Patent) 7

3. United States Patent No. D1,037,436 (The ’436 Patent) 9

C. The Asserted Claims 11

III. THE ASSERTED INVALIDATING PRIOR ART 12

A. Utility Patents 17

1. The ’969 Patent 17

2. The ’686 Patent 19

3. The ’970 Patent 21

4. The ’217 Patent 23

5. The ’329 Patent 25

6. The ’948 Patent 28

7. The ’418 Patent 30

B. Design Patents 30

1. The ’438 Patent 30

2. The ’439 Patent 34

3. The ’436 Patent 39

IV. THE PHOSITA/DOSA. 42

V. THE ASSERTED PATENTS ARE INVALID AS ANTICIPATED OR OBVIOUS UNDER 35 U.S.C § 102 AND/OR 103. 43

A. The Scope and Content of the Prior Art, the Skill of a PHOSITA/DOSA, and Rationales to Combine or Modify a Primary Reference. 56

B. As Demonstrated in Ascentcare’s Invalidity Charts, the Prior Art Renders the Asserted Patents Anticipated and/or Obvious. 61

1. The ’969 Patent 62

2. The ’686 Patent 66

3. The ’970 Patent 68

4. The ’217 Patent 74

5. The ’329 Patent 80

6. The ’948 Patent 87

7. The ’418 Patent 91

8. The ’438 Patent 91

9. The ’439 Patent 91

10. The ’436 Patent 91

C. Solmetex Has Failed to Identify any Secondary Considerations of Nonobviousness. 91

VI. THE ASSERTED PATENTS ARE INVALID UNDER 35 U.S.C. § 112. 92

A. The Asserted Utility Patents Are Invalid Under 35 U.S.C. § 112. 92

B. The ’438 and ’439 Design Patents are Invalid as Indefinite Under 35 U.S.C. § 112 98

Solmetex Ex. 2011
Ascentcare Dental Products v. Solmetex - IPR2025-01059

1. The ’438 and ’439 Patents are Indefinite. 98

2. The ’436 Patent is Indefinite. 102

VII. THE ASSERTED DESIGN PATENTS ARE NOT ELIGIBLE FOR DESIGN PATENT PROTECTION UNDER 35 U.S.C. § 171 AS PARTIAL DESIGNS OR ARTICLES OF MANUFACTURE. 103

VIII. THE ASSERTED DESIGN PATENTS ARE INVALID AS ENTIRELY FUNCTIONAL UNDER 35 U.S.C. § 171. 105

IX. CONCLUSION 107

Solmetex Ex. 2011
Ascentcare Dental Products v. Solmetex - IPR2025-01059

I. INTRODUCTION

Defendant Ascentcare Dental Products, Inc. ("Ascentcare") hereby provides the following Initial Invalidity Contentions to Plaintiff Solmetex, LLC ("Solmetex") in accord with this Court's Scheduling Order. These contentions relate to the invalidity of:

- U.S. Patent No. 11,589,969;
- U.S. Patent No. 11,589,970;
- U.S. Patent No. 11,744,686;
- U.S. Patent No. 11,826,217;
- U.S. Patent No. 12,011,329;
- U.S. Patent No. 12,167,948;
- U.S. Patent No. 12,290,418;[1]
- U.S. Design Patent No. D962,438;
- U.S. Design Patent No. D962,439; and
- U.S. Design Patent No. D1,037,436.

(collectively the "Asserted Patents"). These contentions are responsive to Solmetex's Initial Infringement Contentions. For example, Solmetex has not contended as to any infringement of D988,505 given its representations that it has been dropped from the case. Accordingly, Ascentcare reserves the right to amend its contentions to the extent Solmetex amends its own contentions.

These disclosures are based on Ascentcare's current understanding of the meaning and scope of the Asserted Patents. They are made without knowledge of Solmetex's claim construction

[1] Pursuant to this Court's Order (Dkt. No. 32), Ascentcare's Contentions regarding the United States Patent No. 12,290,418 ("The '418 Patent) will be served no later than August 18, 2025.

Solmetex Ex. 2011
Ascentcare Dental Products v. Solmetex - IPR2025-01059

positions, if applicable, or the Court's claim constructions, if applicable. Ascentcare's contentions do not constitute admissions or adoptions of any particular claim scope or construction. Ascentcare has made reasonable assumptions, to the extent necessary and appropriate, as to the design features found in the Asserted Patents for the purpose of these contentions only and has used these assumptions to prepare these contentions. Additionally, Ascentcare's Initial Invalidity Contentions may take into account alternative and potentially inconsistent positions as to claim construction and scope. Ascentcare reserves the right to amend and/or supplement these disclosures and/or seek leave to do so when claim construction is completed, in reply to Solmetex's response to these disclosures, if any, or in accord with the deadlines set forth in any court order related to same. Unless otherwise stated, Ascentcare has assumed all aspects of the designs depicted in the Asserted Design Patents are ornamental. Ascentcare notes that to the extent any elements of the design are determined to be functional, Solmetex is not entitled to protection over those aspects of the design and Ascentcare reserves the right to request that certain elements of the design be identified as functional.

Ascentcare's investigation of the Asserted Patents is ongoing, as is discovery in this action. For example, and by way of illustration, Ascentcare has not had the opportunity to begin expert discovery, and Solmetex is currently withholding discovery. Ascentcare's investigation and analysis of the prior art, and the knowledge and experiences of designers of ordinary skill in the art is ongoing. Ascentcare reserves the right to amend and/or supplement these disclosures and/or seek leave to do so after discovery is complete and the deadline for final invalidity contentions has passed. Ascentcare also intends to offer expert witness opinions in connection with identifying and analyzing the similarities and any differences between the Asserted Patents and the prior art references.

Further, contained herein are Ascentcare's contentions regarding invalidity due to indefiniteness. To the extent the Asserted Patents are not invalid as indefinite, the Asserted Patents are invalid under §§ 102-103. For the purposes of these Initial Invalidity contentions, and unless stated otherwise, Ascentcare interprets the claims as broadly as Solmetex is for their assertions of infringement, but such interpretation does not constitute a waiver of any arguments to be made at claim construction.

Regarding anticipation and obviousness, Ascentcare's Invalidity Contention claim charts are set forth below and in Exhibits A through J hereto. The citations to prior art provided in Ascentcare's claim charts are intended to be exemplary, not exhaustive. The images used in these charts are representative only, and Ascentcare also relies upon alternative images and photos of the prior art references relied upon herein as well as actual samples of the designs depicted in these references, as well as alternative publications that depict the mouthguards upon which the contentions are based. Ascentcare also relies upon alternative representations of the prior art, including patent drawing representations of the prior art. Ascentcare also relies upon additional or a more specific description of similarities between the prior art references and Solmetex Patents.

II. THE ASSERTED PATENTS

A. Utility Patents

1. United States Patent No. 11,589,969 (The '969 Patent)

The '969 Patent was filed on March 27, 2014 and is a continuation of U.S. Patent No. 8,911,232. The '969 Patent, despite being filed in 2014, did not issue until February 28, 2023 (just under 9 years of prosecution). The '969 Patent claims a priority date of December 7, 2012, which was the filing date of a provisional application ("'939 Provisional"). The '969 Patent is directed to an "Intraoral device with mesh" and generally describes a dental isolation mouthpiece with the same basic structure as a conventional isolation mouthpiece.

2. United States Patent No. 11,744,686 (The '686 Patent)

The '686 Patent was filed on March 27, 2014 and is a continuation of U.S. Patent No. 8,911,232. The '686 Patent, despite being filed in 2014, did not issue until September 5, 2023 (just under 9 years of prosecution). The '686 Patent claims a priority date of December 7, 2012, which was the filing date of the '939 Provisional. The '686 Patent is directed to an "Intraoral device" and generally describes a dental isolation mouthpiece with the same basic structure as a conventional isolation mouthpiece.

3. United States Patent No. 11,589,970 (The '970 Patent)

The '970 Patent was filed on March 27, 2014 and is a continuation of U.S. Patent No. 8,911,232. The '970 Patent, despite being filed in 2014, did not issue until February 28, 2023 (just under 9 years of prosecution). The '970 Patent claims a priority date of December 7, 2012, which was the filing date of the '939 Provisional. The '970 Patent is directed to an "Intraoral device with detachable mouth prop" and generally describes a dental isolation mouthpiece with the same basic structure as a conventional isolation mouthpiece with a detachable bite block.

4. United States Patent No. 11,826,217 (The '217 Patent)

The '217 Patent was filed on May 8, 2020, claiming priority to Provisional Application No. 62/846,353 filed on May 10, 2019 and was issued on November 28, 2023. The '217 Patent is directed to a "Dental mouthpiece" and generally describes a dental mouthpiece with the same basic structure of a conventional isolation mouthpiece, including "intervening walls."

5. United States Patent No. 12,011,329 (The '329 Patent)

The '329 Patent was filed on June 30, 2023 and is a continuation to U.S. Patent No. 8,911,232 and was issued on June 18, 2024. The '329 Patent claims a priority date of December 7, 2012, which was the filing date of the '939 Provisional. The '329 Patent is directed to an

"Intraoral device" and generally describes a dental isolation mouthpiece with the same basic structure of a conventional isolation mouthpiece, including "sidewalls."

6. United States Patent No. 12,167,948 (The '948 Patent) (Second Family)

The '948 Patent was filed on October 3, 2023, claiming priority to U.S. Application No. 16/870,745 (now U.S. Patent No. 11,826,217) and to Provisional Application No. 63/846,353, filed on May 10, 2019, and was issued on December 17, 2024. The '948 Patent is directed to a "Dental mouthpiece" and generally describes a dental isolation mouthpiece with the same basic structure of a conventional isolation mouthpiece, including "intervening walls."

7. United States Patent No. 12,290,418 (The '418 Patent).

Pursuant to this Court's Order (Dkt. No. 32), Ascentcare's Contentions regarding the '418 Patent will be served no later than August 18, 2025.

B. Design Patents

1. United States Patent No. D962,438 (The '438 Patent).

The '438 Patent was filed on May 7, 2021. Solmetex contends that the '438 Patent claims priority to Application No. 14/100,323 ("the '323 Application"), with a priority date of December 9, 2013, and was issued on August 30, 2022. To the extent that it is Solmetex's belief that the '438 Patent is disclosed in the '323 Application, Solmetex has failed to file a terminal disclaimer, as the '438 Patent expires later than the '232 Patent while simultaneously retaining the '232 Patent priority date. As such, the '438 Patent constitutes an improper extension of the lifetime of a patent under statutory, or in the alternative, non-statutory double patenting, and further constitutes patent misuse.

The ’438 Patent has one claim for the ornamental design for a mouthpiece, as shown and described in its four figures. The four figures and descriptions of the ’438 Patent are reproduced below:

’438 Patent Figures and Descriptions	
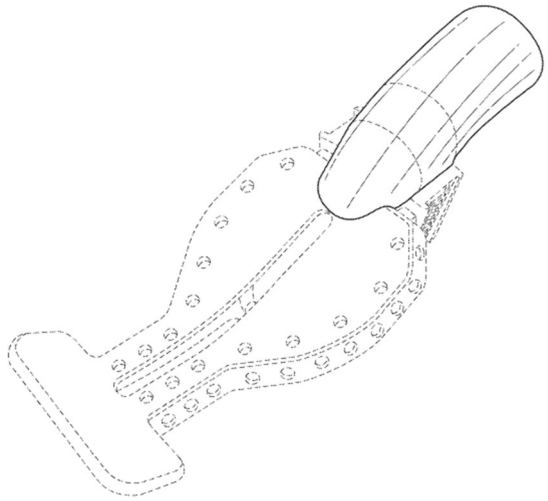 “FIG. 1 is a perspective view of a mouthpiece showing our new design.” *Id*.	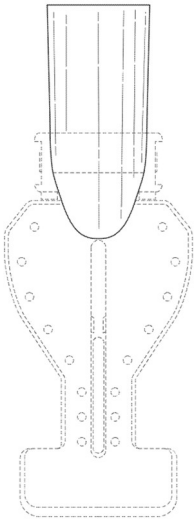 “FIG. 2 is a top view thereof.” *Id*.

’438 Patent Figures and Descriptions	
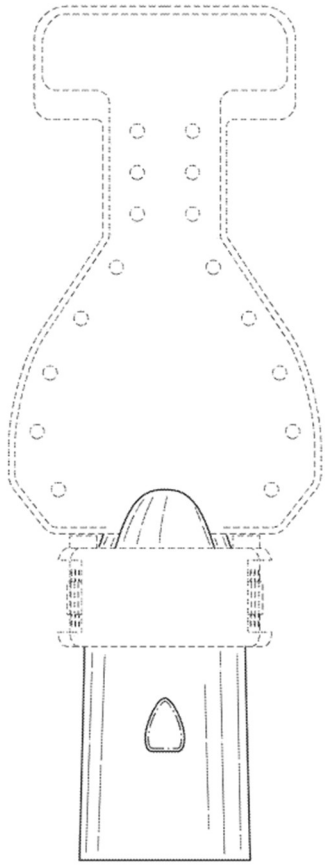 “FIG. 3 is a bottom view thereof.” *Id*.	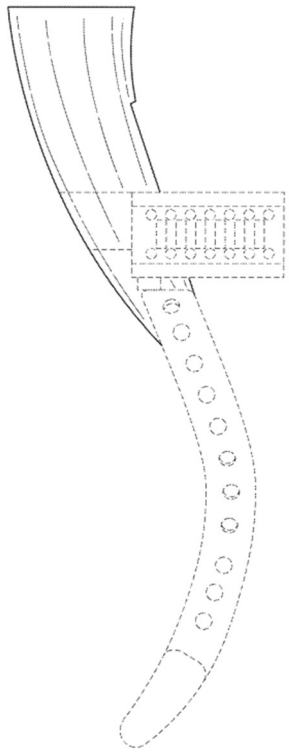 “FIG. 4 is a left side view thereof, with the right side view being a mirror image thereof.” *Id*.
“The broken lines shown in the Figures show portions of the mouthpiece that form no part of the claimed design. The dash-dot broken lines represent the boundary of the claimed design and form no part thereof.” *Id.*	

2. United States Patent No. D962,439 (The ’439 Patent)

The ’439 Patent was filed on May 7, 2021. Solmetex contends that the ’439 Patent claims priority to Application No. 14/100,323 (“the ’323 Application”), with a priority date of December 9, 2013 and was issued on August 30, 2022. To the extent that it is Solmetex’s belief that the ’439 Patent is disclosed in the ’323 Application, Solmetex has failed to file a terminal disclaimer, as the ’439 Patent expires later than the ’232 Patent while simultaneously retaining the

’232 Patent priority date. As such, the ’439 Patent constitutes an improper extension of the lifetime of a patent under statutory, or in the alternative, non-statutory double patenting, and further constitutes patent misuse.

The ’439 Patent has one claim for the ornamental design for a mouthpiece, as shown and described in its four figures. The four figures and descriptions of the ’439 Patent are reproduced below:

’439 Patent Figures and Descriptions	
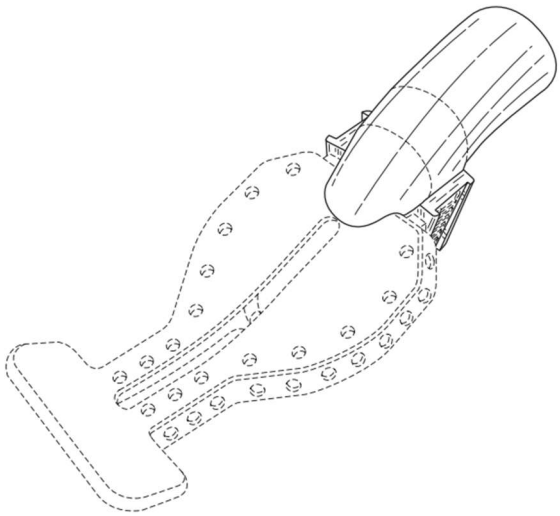 “FIG. 1 is a perspective view of a mouthpiece showing our new design.” *Id*.	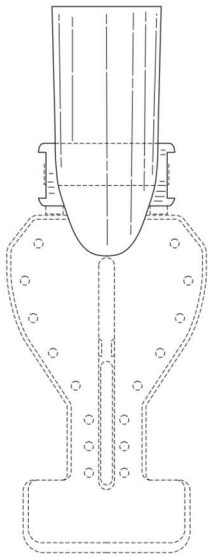 “FIG. 2 is a top view thereof.” *Id*.

’439 Patent Figures and Descriptions	
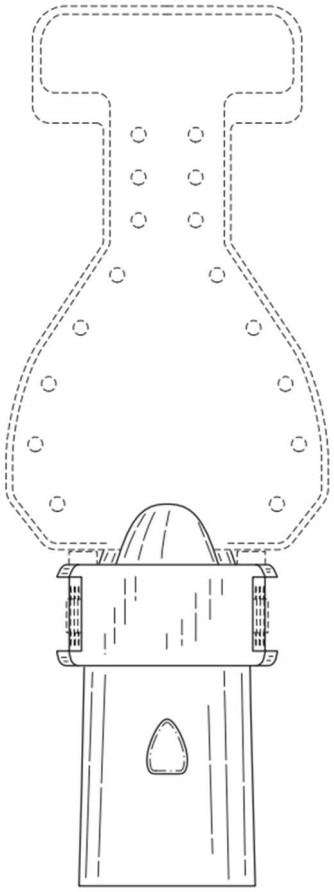 “FIG. 3 is a bottom view thereof.” *Id*.	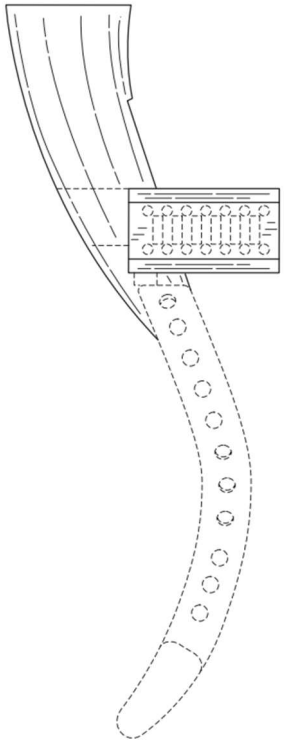 “FIG. 4 is a left side view thereof, with the right side view being a mirror image thereof.” *Id*.
“The broken lines shown in the Figures show portions of the mouthpiece that form no part of the claimed design. The dash-dot broken lines represent the boundary of the claimed design and form no part thereof.” *Id.*	

3. United States Patent No. D1,037,436 (The ’436 Patent)

The ’436 Patent was filed on June 5, 2023. Solmetex contends that the ’436 Patent is a continuation of 29/782,643 and claims a priority of May 8, 2020 and was issued on July 30, 2024.

The ’436 Patent has one claim for the ornamental design for a mouthpiece, as shown and described in its five figures. The five figures and descriptions of the ’436 Patent are reproduced below:

’436 Patent Figures and Descriptions	
“FIG. 1 is a perspective view of a mouthpiece showing our new design.” *Id*.	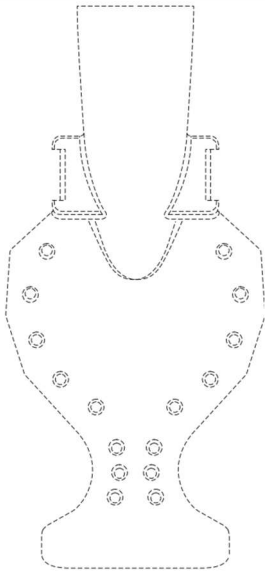 “FIG. 2 is a top view thereof.” *Id*.
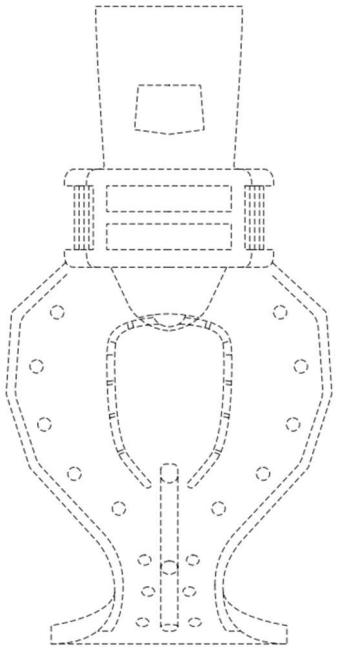	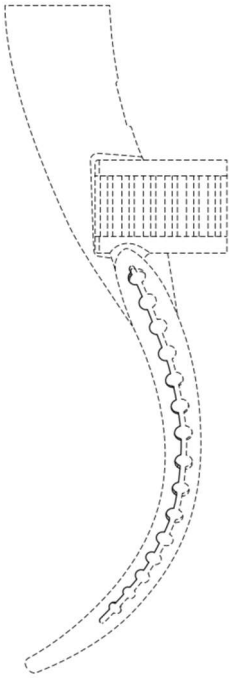

’436 Patent Figures and Descriptions	
“FIG. 3 is a bottom view thereof.” *Id.*	“FIG. 4 is a left side view thereof, with the right side view being a mirror image thereof.” *Id.*
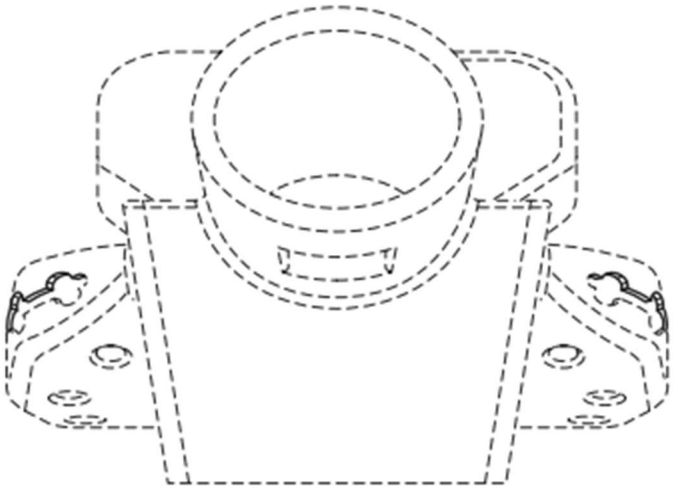 “FIG. 5 is a rear view thereof.”	
“The broken lines shown in the Figures show portions of the mouthpiece that form no part of the claimed design. The dash-dot broken lines represent the boundary of the claimed design and form no part thereof.” *Id.*	

C. The Asserted Claims

In its Initial Infringement Contentions, Solmetex alleges that Ascentcare’s First VacuLux Mouthpiece (VM1) infringes the following claims of the Asserted Utility Patents:

- Claim 19 of the ’969 Patent;
- Claims 1, 9, 10, 11, 12, 13, 15, 16, 18 of the ’970 Patent;
- Claims 12, 13, 14, 15, 17, 18, 20 of the ’686 Patent;
- Claims 17, 18, 19, 20, 21, 22, 23 of the ’217 Patent; and
- Claims 1, 4, 5, 6, 7, 9, 10, 11, 12, 13, 14, 30, 31 of the ’329 Patent.

Solmetex also alleges that Ascentcare’s Second VacuLux Mouthpiece (VM2) infringes the following claims of the Asserted Utility Patents:

- Claim 19 of the ’969 Patent;

- Claims 1, 9, 10, 11, 12, 13, 15, 16, 18 of the ’970 Patent;
- Claims 9, 10, 11, 12, 13, 14, 30 of the ’329 Patent; and
- Claims 20, 21, 22, 23, 24, 25, 26, 27, 28, 29, 30, and 31 of the ’948 Patent; and
- Claims 1, 2, 3, 4, 5, 6, 8, 11, 12, 13, 14, 15, 16, 20, 21, 22, 24, 25, 26, 28 of the ’418 Patent.

Solmetex further alleges that Ascentcare’s First Vaculux Mouthpiece infringes the following Asserted Design Patents:

- The ’438 Patent; and
- The ’439 Patent.

Solmetex further alleges that Ascentcare’s Second Vaculux Mouthpiece infringes the following Asserted Design Patents:

- The ’438 Patent;
- The ’439 Patent; and
- The ’436 Patent.

Ascentcare limits its invalidity contentions to the claims asserted by Solmetex. This limitation of invalidity contentions is not an admission that any of the claims in any of Solmetex’s patents are valid, and Ascentcare reserves the right to supplement these contentions as to any additional claims Solmetex asserts.

III. THE ASSERTED INVALIDATING PRIOR ART

At this stage of the case, Ascentcare contends that the relevant prior art—standing alone or in combination with other prior art and/or the knowledge of a person of ordinary skill in the art (“PHOSITA”) or an ordinary designer in the pertinent art (“DOSA”) —renders the Asserted Patents invalid as anticipated and/or obvious under 35 U.S.C. §§ 102 & 103.

The citations to prior art provided in the claim charts are intended to be exemplary, not exhaustive. The images used in these charts are representative only, and Ascentcare relies upon and incorporates herein by reference alternative images and photos of the prior art references relied

upon herein as well as actual samples of the designs depicted in these references, as well as alternative publications that depict the mouthpieces upon which the contentions are based. Ascentcare further relies upon treatises, published industry standards, and similar documents, regardless of whether they are identified in these contentions, to demonstrate the knowledge of a designer skilled in the art:

Table 1

Prior Art Title	Availability Date	Exemplary Bates
U.S. Patent No. 8,029,280 ("Black")	September 26, 2008	Ascentcare 00003583-Ascentcare 00003643
Korean Patent No. KR10-1082826 ("Park")	January 20, 2010	Ascentcare 00003537-Ascentcare 00003546
U.S. Patent No. 3,101,543 ("Baughan")	May 15, 1961	Ascentcare 00003569-Ascentcare 00003573
U.S. Patent No. 4,017,975 ("Johnson")	March 22, 1976	Ascentcare 00003574-Ascentcare 00003582
U.S. Patent Application Publication No. 2003/0134253 ("Hirsch")	February 27, 2003	Ascentcare 00003547-Ascentcare 00003568
U.S. Patent No. 9,532,858 ("Hirsch 2")	May 31, 2016	Ascentcare 00003661-Ascentcare 00003676
Chinese Patent Application Publication No. 200420094338.X ("Zheng")	October 25, 2004	Ascentcare 00003529-Ascentcare 00003536
D495,799	February 27, 2003	Ascentcare 00003677-Ascentcare 00003680
D735,858	May 22, 2014	Ascentcare 00003681-Ascentcare 00003687
AirBug Mouthpiece	As early as 2009	Ascentcare 00003481 Ascentcare 00003485 Ascentcare 00003486 Ascentcare 00003487

Prior Art Title	Availability Date	Exemplary Bates
		Ascentcare 00003488 Ascentcare 00003489 Ascentcare 00003490 Ascentcare 00003491 Ascentcare 00003492 Ascentcare 00003493 Ascentcare 00003494 Ascentcare 00003495 Ascentcare 00003496 Ascentcare 00003497 Ascentcare 00003498 Ascentcare 00003499 Ascentcare 00003500 Ascentcare 00003501 Ascentcare 00003502 Ascentcare 00003503 Ascentcare 00003504 Ascentcare 00003505 Ascentcare 00003506 Ascentcare 00003507 Ascentcare 00003508 Ascentcare 00003509 Ascentcare 00003510 Ascentcare 00003511 Ascentcare 00003512 Ascentcare 00003513 Ascentcare 00003514 Ascentcare 00003515 Ascentcare 00003529 Ascentcare 00003537 Ascentcare 00003547 Ascentcare 00003569 Ascentcare 00003574 Ascentcare 00003583 Ascentcare 00003644 Ascentcare 00003661 Ascentcare 00003677 Ascentcare 00003681 Ascentcare 00003688 Ascentcare 00003689 Ascentcare 00003742 Ascentcare 00003780 Ascentcare 00003781 Ascentcare 00003782 Ascentcare 00003783

Prior Art Title	Availability Date	Exemplary Bates
		Ascentcare 00003784 Ascentcare 00003785 Ascentcare 00003786 Ascentcare 00003788 Ascentcare 00003787 Ascentcare 00003789 Ascentcare 00003797 Ascentcare 00003802 Ascentcare 00003803 Ascentcare 00003804 Ascentcare 00003805
Mr. Thirsty Mouthpiece[2]	As early as 2012	Ascentcare 00003504 Ascentcare 00003505 Ascentcare 00003506 Ascentcare 00003507
Isolite Mouthpiece	As early as 2002	Ascentcare 00003498 Ascentcare 00003499 Ascentcare 00003500 Ascentcare 00003501 Ascentcare 00003502 Ascentcare 00003503 Ascentcare 00003504 Ascentcare 00003505 Ascentcare 00003506 Ascentcare 00003507 Ascentcare 00003508 Ascentcare 00003509 Ascentcare 00003510 Ascentcare 00003511 Ascentcare 00003512 Ascentcare 00003513 Ascentcare 00003514 Ascentcare 00003515 Ascentcare 00003529 Ascentcare 00003537 Ascentcare 00003547 Ascentcare 00003569 Ascentcare 00003574 Ascentcare 00003583

[2] Discovery is ongoing. Upon information and belief, the Mr. Thirsty Mouthpiece is also prior art to all of the Asserted Patents. To the extent that there are any differences between Mr. Thirsty and AirBug, including any addition of perforations, Mr. Thirsty may be used in place of AirBug in limitations concerning perforations and demonstrate that there was a motivation to add perforations.

Prior Art Title	Availability Date	Exemplary Bates
		Ascentcare 00003644 Ascentcare 00003661 Ascentcare 00003677 Ascentcare 00003681 Ascentcare 00003688 Ascentcare 00003689 Ascentcare 00003742 Ascentcare 00003780 Ascentcare 00003781 Ascentcare 00003782 Ascentcare 00003783 Ascentcare 00003784 Ascentcare 00003785 Ascentcare 00003786 Ascentcare 00003788 Ascentcare 00003787 Ascentcare 00003789 Ascentcare 00003797
DryShield Autoclavable Mouthpiece (DM1)	As early as 2012	Ascentcare 00003485 Ascentcare 00003486 Ascentcare 00003487 Ascentcare 00003488 Ascentcare 00003489 Ascentcare 00003490 Ascentcare 00003491 Ascentcare 00003492 Ascentcare 00003493 Ascentcare 00003494 Ascentcare 00003495 Ascentcare 00003496 Ascentcare 00003497
KR10-1217041	September 17, 2010	Ascentcare 00003813- Ascentcare 00003826
KR10-0654392	September 13, 2005	Ascentcare 00003806- Ascentcare 00003812
CN102631180 (“Kwong”)	April 20, 2012	Ascentcare 00003515- Ascentcare 00003528
US4,024,642 (“Zorovich”)	August 26, 1975	Ascentcare 00003846- Ascentcare 00003850
2014/0349249 (“Reyes”)	May 24, 2013	Ascentcare 00003827- Ascentcare 00003836

Additionally, as discussed below in Section V, Ascentcare relies on additional references, in addition to the above, to demonstrate the scope and content of the prior art, the skill of a PHOSITA/DOSA, and motivations to combine references.

A. Utility Patents

1. The ’969 Patent

INVALIDATING PRIOR ART APPLICABLE TO THE ’969 PATENT (ALLEGED PRIORITY DATE: DECEMBER 7, 2012)

Ascentcare incorporates Table 1 above. Ascentcare provides the following prior art combinations for its Initial Invalidity Contentions in relation to the ’969 Patent:

- Claim 19 is anticipated under pre-AIA 35 U.S.C. § 102 in view of patent and/or printed publication in Black.
- Claim 19 is anticipated under pre-AIA 35 U.S.C. § 102 in view of the public use or sale of AirBug.
- Claim 19 is rendered obvious under pre-AIA 35 U.S.C. § 103 in view of patent and/or printed publication Black in combination with the skill of a PHOSITA.
- Claim 19 is rendered obvious under pre-AIA 35 U.S.C. § 103 in view of the public use or sale of AirBug in combination with the skill of a PHOSITA.
- Claim 19 is rendered obvious under pre-AIA 35 U.S.C. § 103 in view of patent and/or printed publication Black in combination one or two of printed publication Park or Hirsch, and the skill of a PHOSITA.
- Claim 19 is rendered obvious under pre-AIA 35 U.S.C. § 103 in view of patent and/or printed publication Black in combination one or two of the public use or sale of Isolite Mouthpiece, and the skill of a PHOSITA.
- Claim 19 is rendered obvious under pre-AIA 35 U.S.C. § 103 in view of the public use or sale of AirBug in combination one or two of patent, printed publication, public use, or sale of Park, Hirsch, or Isolite Mouthpiece, and the skill of a PHOSITA.
- Claim 19 is rendered obvious under pre-AIA 35 U.S.C. § 103 in view of patent and/or printed publication Park in combination with the skill of a PHOSITA.
- Claim 19 is rendered obvious under pre-AIA pre-AIA 35 U.S.C. § 103 in view of patent and/or printed publication Park in combination with one or two of patent or printed publication Black, Baughan, or Johnson, and the skill of a PHOSITA.

- Claim 19 is rendered obvious under pre-AIA 35 U.S.C. § 103 in view of patent and/or printed publication Park in combination with one or two of the public use or sale of AirBug and the skill of a PHOSITA.

- Claim 19 is rendered obvious under pre-AIA 35 U.S.C. § 103 in view of patent and/or printed publication Hirsch in combination with one or two of patent or printed publication Baughan, Johnson, Black, Reyes.

- Claim 19 is rendered obvious under pre-AIA 35 U.S.C. § 103 in view of the public use or sale of Isolite Mouthpiece in combination with one or two of patent or printed publication Baughan, Johnson, Black, Reyes, and the skill of a PHOSITA.

- Claim 19 is rendered obvious under pre-AIA 35 U.S.C. § 103 in view of patent or printed publication KR101217041 in combination with one or two of patent or printed publication Baughan, Black, Reyes, or Johnson, and the skill of a PHOSITA.

- Claim 19 is rendered obvious under pre-AIA 35 U.S.C. § 103 in view of patent or printed publication KR100654392 in combination with one or two of patent or printed publication Baughan, Black, Reyes, or Johnson, and the skill of a PHOSITA.

- Claim 19 is rendered obvious under pre-AIA 35 U.S.C. § 103 in view of patent or printed publication KR100654392 in combination with AirBug, and the skill of a PHOSITA.

- Claim 19 is rendered obvious under pre-AIA 35 U.S.C. § 103 in view of patent or printed publication Johnson in combination with one or two of patent or printed publication KR101217041, KR100654392, Black, or Hirsch, and the skill of a PHOSITA.

- Claim 19 is rendered obvious under pre-AIA 35 U.S.C. § 103 in view of patent or printed publication Johnson in combination with one or two of the public use or sale of AirBug or Isolite Mouthpiece, and the skill of a PHOSITA.

- Claim 19 is rendered obvious under pre-AIA 35 U.S.C. § 103 in view of patent or printed publication Kwong and the skill of a PHOSITA.

- Claim 19 is rendered obvious under pre-AIA 35 U.S.C. § 103 in view of patent or printed publication Kwong and Johnson, and the skill of a PHOSITA.

- Any combinations or replacements as disclosed Exhibit A-0.

The prior art noted renders the Asserted Patents anticipated, or in the alternative obvious, in combination with the knowledge of a PHOSITA and/or the secondary references cited, renders the Asserted Patents as obvious. Ascentcare also incorporates by reference each and every item of prior art identified or described in the prosecution of the Asserted Patents and related applications, including the statements made by the applicant(s), and any additional prior art discussed herein to establish the state of the art at the purported time of invention.

2. The ’686 Patent

INVALIDATING PRIOR ART APPLICABLE TO THE ’686 PATENT (ALLEGED PRIORITY DATE: DECEMBER 7, 2012)

Ascentcare incorporates Table 1 above. Ascentcare provides the following prior art combinations for its Initial Invalidity Contentions in relation to the ’686 Patent:

- Claims 12-15, 17-18, and 20 are rendered obvious under pre-AIA 35 U.S.C. § 103 in view of Black in combination with the skill of a PHOSITA.
- Claims 12-15, 17-18, and 20 are rendered obvious under pre-AIA 35 U.S.C. § 103 in view of patent and/or printed publication Park in combination with the skill of a PHOSITA.
- Claims 12-15, 17-18, and 20 are rendered obvious under pre-AIA pre-AIA 35 U.S.C. § 103 in view of patent and/or printed publication Park in combination with one or two of patent or printed publication Black, Baughan, or Johnson, and the skill of a PHOSITA.
- Claims 12-15, 17-18, and 20 are rendered obvious under pre-AIA pre-AIA 35 U.S.C. § 103 in view of patent and/or printed publication Park in combination with one or two of the public use or sale of AirBug and the skill of a PHOSITA.
- Claims 12-15, 17-18, and 20 are rendered obvious under pre-AIA 35 U.S.C. § 103 in view of patent and/or printed publication Black in combination with the skill of a PHOSITA.
- Claims 12-15, 17-18, and 20 are rendered obvious under pre-AIA 35 U.S.C. § 103 in view of the public use or sale of AirBug in combination with the skill of a PHOSITA.
- Claims 12-15, 17-18, and 20 are rendered obvious under pre-AIA 35 U.S.C. § 103 in view of patent and/or printed publication Black in combination one or two of

patent or printed publication Park, Baughan, or Johnson, with the skill of a PHOSITA.

- Claims 12-15, 17-18, and 20 are rendered obvious under pre-AIA 35 U.S.C. § 103 in view of the public use or sale of AirBug in combination one or two of patent or printed publication Park, Baughan, or Johnson, with the skill of a PHOSITA.

- Claims 12-15, 17-18, and 20 are rendered obvious under pre-AIA 35 U.S.C. § 103 in view of patent and/or printed publication Hirsch in combination one or two of patent or printed publication Black, with the skill of a PHOSITA.

- Claims 12-15, 17-18, and 20 are rendered obvious under pre-AIA 35 U.S.C. § 103 in view of patent and/or printed publication Hirsch in combination one or two of the public use or sale of AirBug, with the skill of a PHOSITA.

- Claims 12-15, 17-18, and 20 are rendered obvious under pre-AIA 35 U.S.C. § 103 in view of the public use or sale of Isolite Mouthpiece in view of one or two of patent, printed publication, public use, or sale of Black or AirBug, with the skill of a PHOSITA.

- Claims 12-15, 17-18, and 20 are rendered obvious under pre-AIA 35 U.S.C. § 103 in view of patent and/or printed publication Hirsch in combination with one or two of patent or printed publication Baughan, Johnson, Black, Reyes.

- Claims 12-15, 17-18, and 20 are rendered obvious under pre-AIA 35 U.S.C. § 103 in view of the public use or sale of Isolite Mouthpiece in combination with one or two of patent or printed publication Baughan, Johnson, Black, Reyes, and the skill of a PHOSITA.

- Claims 12-15, 17-18, and 20 are rendered obvious under pre-AIA 35 U.S.C. § 103 in view of patent or printed publication KR101217041 in combination with one or two of patent or printed publication Baughan, Black, Reyes, or Johnson, and the skill of a PHOSITA.

- Claims 12-15, 17-18, and 20 are rendered obvious under pre-AIA 35 U.S.C. § 103 in view of patent or printed publication KR100654392 in combination with one or two of patent or printed publication Baughan, Black, Reyes, or Johnson, and the skill of a PHOSITA.

- Claims 12-15, 17-18, and 20 are rendered obvious under pre-AIA 35 U.S.C. § 103 in view of patent or printed publication KR100654392 in combination with AirBug, and the skill of a PHOSITA.

- Claims 12-15, 17-18, and 20 are rendered obvious under pre-AIA 35 U.S.C. § 103 in view of patent or printed publication Johnson in combination with one or two of patent or printed publication KR101217041, KR100654392, Black, or Hirsch, and the skill of a PHOSITA.

- Claims 12-15, 17-18, and 20 are rendered obvious under pre-AIA 35 U.S.C. § 103 in view of patent or printed publication Johnson in combination with one or two of the public use or sale of AirBug or Isolite Mouthpiece, and the skill of a PHOSITA.

- Claims 12-15, 17-18, and 20 are rendered obvious under pre-AIA 35 U.S.C. § 103 in view of patent or printed publication Kwong and the skill of a PHOSITA.

- Claims 12-15, 17-18, and 20 are rendered obvious under pre-AIA 35 U.S.C. § 103 in view of patent or printed publication Kwong and Johnson, and the skill of a PHOSITA.

- Any combinations or replacements as disclosed Exhibit B-0.

The prior art noted renders the Asserted Patents obvious in combination with the knowledge of a PHOSITA and/or the secondary references cited, renders the Asserted Patents as obvious. Ascentcare also incorporates by reference each and every item of prior art identified or described in the prosecution of the Asserted Patents and related applications, including the statements made by the applicant(s), and any additional prior art discussed herein to establish the state of the art at the purported time of invention.

3. The ’970 Patent

INVALIDATING PRIOR ART APPLICABLE TO THE ’970 PATENT (ALLEGED PRIORITY DATE: DECEMBER 7, 2012)

Ascentcare incorporates Table 1 above. Ascentcare provides the following prior art combinations for its Initial Invalidity Contentions in relation to the ’970 Patent:

- Claims 1, 9, 10, 11, 12, 13, 15, 16, and 18 are rendered obvious under pre-AIA 35 U.S.C. § 103 in view of patent and/or printed publication Black in combination with the skill of a PHOSITA.

- Claims 1, 9, 10, 11, 12, 13, 15, 16, and 18 are rendered obvious under pre-AIA 35 U.S.C. § 103 in view of patent and/or printed publication Park in combination with the skill of a PHOSITA.

- Claims 1, 9, 10, 11, 12, 13, 15, 16, and 18 are rendered obvious under pre-AIA pre-AIA 35 U.S.C. § 103 in view of patent and/or printed publication Park in combination with one or two of patent or printed publication Black, Baughan, or Johnson, and the skill of a PHOSITA.

- Claims 1, 9, 10, 11, 12, 13, 15, 16, and 18 are rendered obvious under pre-AIA pre-AIA 35 U.S.C. § 103 in view of patent and/or printed publication Park in combination with one or two of the public use or sale of AirBug and the skill of a PHOSITA.

- Claims 1, 9, 10, 11, 12, 13, 15, 16, and 18 are rendered obvious under pre-AIA 35 U.S.C. § 103 in view of patent and/or printed publication Black in combination with the skill of a PHOSITA.

- Claims 1, 9, 10, 11, 12, 13, 15, 16, and 18 are rendered obvious under pre-AIA 35 U.S.C. § 103 in view of the public use or sale of AirBug in combination with the skill of a PHOSITA.

- Claims 1, 9, 10, 11, 12, 13, 15, 16, and 18 are rendered obvious under pre-AIA 35 U.S.C. § 103 in view of patent and/or printed publication Black in combination one or two of patent or printed publication Baughan or Johnson, with the skill of a PHOSITA.

- Claims 1, 9, 10, 11, 12, 13, 15, 16, and 18 are rendered obvious under pre-AIA 35 U.S.C. § 103 in view of the public use or sale of AirBug in combination one or two of patent or printed publication Baughan, or Johnson, with the skill of a PHOSITA.

- Claims 1, 9, 10, 11, 12, 13, 15, 16, and 18 are obvious under pre-AIA 35 U.S.C. § 103 in view of patent and/or printed publication Hirsch in combination with one or two of patent or printed publication Baughan, Johnson, Black, Reyes.

- Claims 1, 9, 10, 11, 12, 13, 15, 16, and 18 are rendered obvious under pre-AIA 35 U.S.C. § 103 in view of the public use or sale of Isolite Mouthpiece in combination with one or two of patent or printed publication Baughan, Johnson, Black, Reyes, and the skill of a PHOSITA.

- Claims 1, 9, 10, 11, 12, 13, 15, 16, and 18 are rendered obvious under pre-AIA 35 U.S.C. § 103 in view of patent or printed publication KR101217041 in combination with one or two of patent or printed publication Baughan, Black, Reyes, or Johnson, and the skill of a PHOSITA.

- Claims 1, 9, 10, 11, 12, 13, 15, 16, and 18 are rendered obvious under pre-AIA 35 U.S.C. § 103 in view of patent or printed publication KR100654392 in combination with one or two of patent or printed publication Baughan, Black, Reyes, or Johnson, and the skill of a PHOSITA.

- Claims 1, 9, 10, 11, 12, 13, 15, 16, and 18 are rendered obvious under pre-AIA 35 U.S.C. § 103 in view of patent or printed publication KR100654392 in combination with AirBug, and the skill of a PHOSITA.

- Claims 1, 9, 10, 11, 12, 13, 15, 16, and 18 are rendered obvious under pre-AIA 35 U.S.C. § 103 in view of patent or printed publication Johnson in combination with

one or two of patent or printed publication KR101217041, KR100654392, Black, or Hirsch, and the skill of a PHOSITA.

- Claims 1, 9, 10, 11, 12, 13, 15, 16, and 18 are rendered obvious under pre-AIA 35 U.S.C. § 103 in view of patent or printed publication Johnson in combination with one or two of the public use or sale of AirBug or Isolite Mouthpiece, and the skill of a PHOSITA.

- Claims 1, 9, 10, 11, 12, 13, 15, 16, and 18 are rendered obvious under pre-AIA 35 U.S.C. § 103 in view of patent or printed publication Kwong and the skill of a PHOSITA.

- Claims 1, 9, 10, 11, 12, 13, 15, 16, and 18 are rendered obvious under pre-AIA 35 U.S.C. § 103 in view of patent or printed publication Kwong and Johnson, and the skill of a PHOSITA.

- Any combinations or replacements as disclosed Exhibit C-0.

The prior art noted renders the Asserted Patents obvious in combination with the knowledge of a PHOSITA and/or the secondary references cited, renders the Asserted Patents as obvious. Ascentcare also incorporates by reference each and every item of prior art identified or described in the prosecution of the Asserted Patents and related applications, including the statements made by the applicant(s), and any additional prior art discussed herein to establish the state of the art at the purported time of invention.

4. The ’217 Patent

INVALIDATING PRIOR ART APPLICABLE TO THE ’217 PATENT (ALLEGED PRIORITY DATE: May 10, 2019)

Ascentcare incorporates Table 1 above. Ascentcare provides the following prior art combinations for its Initial Invalidity Contentions in relation to the ’217 Patent:

- Claims 17-23 are anticipated under 35 U.S.C. § 102 in view of patent and/or printed publication in Nguyen.

- Claims 17-23 are anticipated under 35 U.S.C. § 102 in view of the public use or sale of DM1.

- Claims 17-23 are rendered obvious under 35 U.S.C. § 103 in view of patent and/or printed publication in Nguyen in combination with the skill of a PHOSITA.

- Claims 17-23 are rendered obvious under 35 U.S.C. § 103 in view of the public use or sale of DM1 in combination with the skill of a PHOSITA.

- Claims 17-23 are rendered obvious under 35 U.S.C. § 103 in view of patent and/or printed publication Nguyen in combination one two of patent and/or printed publication of Black, Hirsch, or Hirsch 2, and the skill of a PHOSITA.

- Claims 17-23 are rendered obvious under 35 U.S.C. § 103 in view of patent and/or printed publication Nguyen in combination one or two of public use or sale of AirBug, Mr. Thirsty, or Isolite Mouthpiece, and the skill of a PHOSITA.

- Claims 17-23 are rendered obvious under 35 U.S.C. § 103 in view of the public use or sale of DM1 in combination one or two of the public use, sale, patent, or printed publication of Black, AirBug, Mr. Thirsty, Hirsch, Hirsch 2, Isolite Mouthpiece, and the skill of a PHOSITA.

- Claims 17-23 are rendered obvious 35 U.S.C. § 103 in view of patent and/or printed publication Hirsch in combination with the skill of a PHOSITA.

- Claims 17-23 are rendered obvious 35 U.S.C. § 103 in view of patent and/or printed publication Hirsch in combination one or two of patent and/or printed publication Nguyen and the skill of a PHOSITA.

- Claims 17-23 are rendered obvious 35 U.S.C. § 103 in view of patent and/or printed publication Hirsch in combination one or two of the public use or sale of DM1 and the skill of a PHOSITA.

- Claims 17-23 are rendered obvious 35 U.S.C. § 103 in view of the public use or sale of Isolite Mouthpiece in combination with the skill of a PHOSITA.

- Claims 17-23 are rendered obvious 35 U.S.C. § 103 in view of patent and/or printed publication Isolite Mouthpiece in combination one or two of patent and/or printed publication Nguyen and the skill of a PHOSITA.

- Claims 17-23 are rendered obvious 35 U.S.C. § 103 in view of patent and/or printed publication Hirsch in combination one or two of the public use or sale of DM1 and the skill of a PHOSITA.

- Claims 17-23 are anticipated under 35 U.S.C. § 102 in view of patent and/or printed publication Hirsch 2.

- Claims 17-23 are obvious under 35 U.S.C. § 103 in view of patent and/or printed publication Hirsch 2 and the skill of a PHOSITA.

- Claims 17-23 are rendered obvious under 35 U.S.C. § 103 in view of patent and/or printed publication Nguyen in in combination with one or two of patent and/or

printed publication KR10127041, KR100654392, Johnson, Baughan, or 2017/0156831, and the skill of a PHOSITA.

- Claims 17-23 are rendered 35 U.S.C. § 103 in view of the public use or sale of DM1 in combination with one or two of patent and/or printed publication KR10127041, KR100654392, Johnson, Baughan, or 2017/0156831, and the skill of a PHOSITA.
- Claims 17-23 are obvious under 35 U.S.C. § 103 in view of patent and/or printed publication KR101217041 and Nguyen and the skill of a PHOSITA.
- Claims 17-23 are obvious under 35 U.S.C. § 103 in view of patent and/or printed publication KR101217041 and DM1 and the skill of a PHOSITA.
- Claims 17-23 are obvious under 35 U.S.C. § 103 in view of patent and/or printed publication KR100654392 and Nguyen and the skill of a PHOSITA.
- Claims 17-23 are obvious under 35 U.S.C. § 103 in view of patent and/or printed publication KR100654392 and DM1 and the skill of a PHOSITA.
- Any combinations or replacements as disclosed Exhibit D-0.

The prior art noted renders the Asserted Patents obvious in combination with the knowledge of a PHOSITA and/or the secondary references cited, renders the Asserted Patents as anticipated and/or obvious. Ascentcare also incorporates by reference each and every item of prior art identified or described in the prosecution of the Asserted Patents and related applications, including the statements made by the applicant(s), and any additional prior art discussed herein to establish the state of the art at the purported time of invention.

5. The ’329 Patent

INVALIDATING PRIOR ART APPLICABLE TO THE ’329 PATENT (ALLEGED PRIORITY DATE: DECEMBER 7, 2012)

Ascentcare incorporates Table 1 above. Ascentcare provides the following prior art combinations for its Initial Invalidity Contentions in relation to the ’329 Patent:

- Claims 1, 4, and 5 are anticipated under pre-AIA 35 U.S.C. § 102 in view of patent and/or printed publication in Black.

- Claims 1, 4, 5, 6, 7, 9, 10, 11, 12, 13, 14, and 30 are rendered obvious under pre-AIA 35 U.S.C. § 103 in view of patent and/or printed publication Black in combination with the skill of a PHOSITA.

- Claims 1, 4, 5, 6, 7, 9, 10, 11, 12, 13, 14, and 30 are rendered obvious under pre-AIA 35 U.S.C. § 103 in view of patent and/or printed publication Black in combination one or two of printed publication Park or Hirsch, and the skill of a PHOSITA.

- Claims 1, 4, 5, 6, 7, 9, 10, 11, 12, 13, 14, and 30 are rendered obvious under pre-AIA 35 U.S.C. § 103 in view of patent and/or printed publication Black in combination one or two of the public use or sale of Isolite Mouthpiece, and the skill of a PHOSITA.

- Claims 1, 4, 5, 6, 7, 9, 10, 11, 12, 13, 14, and 30 are rendered obvious under pre-AIA 35 U.S.C. § 103 in view of the public use or sale of AirBug in combination one or two of patent, printed publication, public use, or sale of Park, Hirsch, or Isolite Mouthpiece, and the skill of a PHOSITA.

- Claims 1, 4, 5, 6, 7, 9, 10, 11, 12, 13, 14, and 30 are rendered obvious under pre-AIA 35 U.S.C. § 103 in view of patent and/or printed publication Park in combination with the skill of a PHOSITA.

- Claims 1, 4, 5, 6, 7, 9, 10, 11, 12, 13, 14, and 30 are rendered obvious under pre-AIA pre-AIA 35 U.S.C. § 103 in view of patent and/or printed publication Park in combination with one or two of patent or printed publication Black, Baughan, or Johnson, Hirsch, and the skill of a PHOSITA.

- Claims 1, 4, 5, 6, 7, 9, 10, 11, 12, 13, 14, and 30 are rendered obvious under pre-AIA pre-AIA 35 U.S.C. § 103 in view of patent and/or printed publication Park in combination with one or two of the public use or sale of AirBug or Isolite Mouthpiece, and the skill of a PHOSITA.

- Claims 1, 4, 5, 6, 7, 9, 10, 11, 12, 13, 14, and 30 are rendered obvious under pre-AIA 35 U.S.C. § 103 in view of patent and/or printed publication Hirsch in combination with one or two of patent or printed publication Baughan, Johnson, Black, Reyes.

- Claims 1, 4, 5, 6, 7, 9, 10, 11, 12, 13, 14, and 30 are rendered obvious under pre-AIA 35 U.S.C. § 103 in view of the public use or sale of Isolite Mouthpiece in combination with one or two of patent or printed publication Baughan, Johnson, Black, Reyes, and the skill of a PHOSITA.

- Claims 1, 4, 5, 6, 7, 9, 10, 11, 12, 13, 14, and 30 are rendered obvious under pre-AIA 35 U.S.C. § 103 in view of patent or printed publication KR101217041 in

combination with one or two of patent or printed publication Baughan, Black, Reyes, or Johnson, and the skill of a PHOSITA.

- Claims 1, 4, 5, 6, 7, 9, 10, 11, 12, 13, 14, and 30 are rendered obvious under pre-AIA 35 U.S.C. § 103 in view of patent or printed publication KR100654392 in combination with one or two of patent or printed publication Baughan, Black, Reyes, or Johnson, and the skill of a PHOSITA.

- Claims 1, 4, 5, 6, 7, 9, 10, 11, 12, 13, 14, and 30 are rendered obvious under pre-AIA 35 U.S.C. § 103 in view of patent or printed publication KR100654392 in combination with AirBug, and the skill of a PHOSITA.

- Claims 1, 4, 5, 6, 7, 9, 10, 11, 12, 13, 14, and 30 are rendered obvious under pre-AIA 35 U.S.C. § 103 in view of patent or printed publication Johnson in combination with one or two of patent or printed publication KR101217041, KR100654392, Black, or Hirsch, and the skill of a PHOSITA.

- Claims 1, 4, 5, 6, 7, 9, 10, 11, 12, 13, 14, and 30 are rendered obvious under pre-AIA 35 U.S.C. § 103 in view of patent or printed publication Johnson in combination with one or two of the public use or sale of AirBug or Isolite Mouthpiece, and the skill of a PHOSITA.

- Claims 1, 4, 5, 6, 7, 9, 10, 11, 12, 13, 14, and 30 are rendered obvious under pre-AIA 35 U.S.C. § 103 in view of patent or printed publication Kwong and the skill of a PHOSITA.

- Claims 1, 4, 5, 6, 7, 9, 10, 11, 12, 13, 14, and 30 are rendered obvious under pre-AIA 35 U.S.C. § 103 in view of patent or printed publication Kwong and Johnson, and the skill of a PHOSITA.

- Any combinations or replacements as disclosed Exhibit E-0.

The prior art noted renders the Asserted Patents obvious in combination with the knowledge of a PHOSITA and/or the secondary references cited, renders the Asserted Patents as obvious. Ascentcare also incorporates by reference each and every item of prior art identified or described in the prosecution of the Asserted Patents and related applications, including the statements made by the applicant(s), and any additional prior art discussed herein to establish the state of the art at the purported time of invention.

6. The ’948 Patent

INVALIDATING PRIOR ART APPLICABLE TO THE ’948 PATENT (ALLEGED PRIORITY DATE: May 10, 2019)

Ascentcare incorporates Table 1 above. Ascentcare provides the following prior art combinations for its Initial Invalidity Contentions in relation to the ’948 Patent:

- Claims 20-31 are rendered obvious under 35 U.S.C. § 103 in view of patent and/or printed publication in Nguyen in combination with the skill of a PHOSITA.
- Claims 20-31 are rendered obvious under 35 U.S.C. § 103 in view of the public use or sale of DM1 in combination with the skill of a PHOSITA.
- Claims 20-31 are rendered obvious under 35 U.S.C. § 103 in view of patent and/or printed publication Nguyen in combination one two of patent and/or printed publication of Black, Hirsch, or Hirsch 2, and the skill of a PHOSITA.
- Claims 20-31 are rendered obvious under 35 U.S.C. § 103 in view of patent and/or printed publication Nguyen in combination one or two of public use or sale of AirBug, Mr. Thirsty, or Isolite Mouthpiece.
- Claims 20-31 are rendered obvious under 35 U.S.C. § 103 in view of the public use or sale of DM1 in combination one or two of the public use, sale, patent, or printed publication of Black, AirBug, Mr. Thirsty, Hirsch, Hirsch 2, Isolite Mouthpiece, and the skill of a PHOSITA.
- Claims 20-31 are rendered obvious under 35 U.S.C. § 103 in view of patent and/or printed publication Hirsch in combination with the skill of a PHOSITA.
- Claims 20-31 are rendered obvious under 35 U.S.C. § 103 in view of patent and/or printed publication Hirsch in combination one or two of patent and/or printed publication Nguyen and the skill of a PHOSITA.
- Claims 20-31 are rendered obvious under 35 U.S.C. § 103 in view of patent and/or printed publication Hirsch in combination one or two of the public use or sale of DM1 and the skill of a PHOSITA.
- Claims 20-31 are rendered obvious under 35 U.S.C. § 103 in view of the public use or sale of Isolite Mouthpiece in combination with the skill of a PHOSITA.
- Claims 20-31 are rendered obvious under 35 U.S.C. § 103 in view of patent and/or printed publication Isolite Mouthpiece in combination one or two of patent and/or printed publication Nguyen and the skill of a PHOSITA.

- Claims 20-31 are rendered obvious under 35 U.S.C. § 103 in view of patent and/or printed publication Hirsch in combination one or two of the public use or sale of DM1 and the skill of a PHOSITA.

- Claims 20-31 are anticipated under 35 U.S.C. § 102 in view of patent and/or printed publication Hirsch 2.

- Claims 20-31 are obvious under 35 U.S.C. § 103 in view of patent and/or printed publication Hirsch 2 and the skill of a PHOSITA.

- Claims 20-31 are rendered obvious under 35 U.S.C. § 103 in view of patent and/or printed publication Nguyen in in combination with one or two of patent and/or printed publication KR10127041, KR100654392, Johnson, Baughan, or 2017/0156831, and the skill of a PHOSITA.

- Claims 20-31 are rendered 35 U.S.C. § 103 in view of the public use or sale of DM1 in combination with one or two of patent and/or printed publication KR10127041, KR100654392, Johnson, Baughan, or 2017/0156831, and the skill of a PHOSITA.

- Claims 20-31 are obvious under 35 U.S.C. § 103 in view of patent and/or printed publication KR101217041 and Nguyen and the skill of a PHOSITA.

- Claims 20-31 are obvious under 35 U.S.C. § 103 in view of patent and/or printed publication KR101217041 and DM1 and the skill of a PHOSITA.

- Claims 20-31 are obvious under 35 U.S.C. § 103 in view of patent and/or printed publication KR100654392 and Nguyen and the skill of a PHOSITA.

- Claims 20-31 are obvious under 35 U.S.C. § 103 in view of patent and/or printed publication KR100654392 and DM1 and the skill of a PHOSITA.

- Any combinations or replacements as disclosed Exhibit F-0.

The prior art noted renders the Asserted Patents anticipated, or in the alternative obvious, in combination with the knowledge of a PHOSITA and/or the secondary references cited, renders the Asserted Patents as obvious. Ascentcare also incorporates by reference each and every item of prior art identified or described in the prosecution of the Asserted Patents and related applications, including the statements made by the applicant(s), and any additional prior art discussed herein to establish the state of the art at the purported time of invention.

7. The ’418 Patent

Pursuant to this Court’s Order (Dkt. No. 32), Ascentcare’s Contentions regarding the ’418 Patent will be served no later than August 18, 2025.

B. Design Patents

1. The ’438 Patent

INVALIDATING PRIOR ART APPLICABLE TO THE ’438 PATENT (ALLEGED PRIORITY DATE: December 9, 2013)

Prior Art Title	Availability Date	Exemplary Bates
U.S. Patent No. 8,029,280 (“Black”)	September 26, 2008	Ascentcare 00003583- Ascentcare 00003643
AirBug Mouthpiece	As early as 2009	Ascentcare 00003481 Ascentcare 00003485 Ascentcare 00003486 Ascentcare 00003487 Ascentcare 00003488 Ascentcare 00003489 Ascentcare 00003490 Ascentcare 00003491 Ascentcare 00003492 Ascentcare 00003493 Ascentcare 00003494 Ascentcare 00003495 Ascentcare 00003496 Ascentcare 00003497 Ascentcare 00003498 Ascentcare 00003499 Ascentcare 00003500 Ascentcare 00003501 Ascentcare 00003502 Ascentcare 00003503 Ascentcare 00003504 Ascentcare 00003505 Ascentcare 00003506 Ascentcare 00003507 Ascentcare 00003508 Ascentcare 00003509 Ascentcare 00003510 Ascentcare 00003511 Ascentcare 00003512 Ascentcare 00003513 Ascentcare 00003514

Prior Art Title	Availability Date	Exemplary Bates
		Ascentcare 00003515 Ascentcare 00003529 Ascentcare 00003537 Ascentcare 00003547 Ascentcare 00003569 Ascentcare 00003574 Ascentcare 00003583 Ascentcare 00003644 Ascentcare 00003661 Ascentcare 00003677 Ascentcare 00003681 Ascentcare 00003688 Ascentcare 00003689 Ascentcare 00003742 Ascentcare 00003780 Ascentcare 00003781 Ascentcare 00003782 Ascentcare 00003783 Ascentcare 00003784 Ascentcare 00003785 Ascentcare 00003786 Ascentcare 00003788 Ascentcare 00003787 Ascentcare 00003789 Ascentcare 00003797 Ascentcare 00003802 Ascentcare 00003803 Ascentcare 00003804 Ascentcare 00003805
Korean Patent No. 10-1082826 ("Park")	January 20, 2010	Ascentcare 00003537- Ascentcare 00003546
D495,799	February 27, 2003	Ascentcare 00003677- Ascentcare 00003680
U.S. Patent Application No. 2003/0134253 ("Hirsch")	February 27, 2003	Ascentcare 00003547- Ascentcare 00003568
Isolite Mouthpiece	As early as 2002	Ascentcare 00003498 Ascentcare 00003499 Ascentcare 00003500 Ascentcare 00003501 Ascentcare 00003502 Ascentcare 00003503 Ascentcare 00003504

Prior Art Title	Availability Date	Exemplary Bates
		Ascentcare 00003505 Ascentcare 00003506 Ascentcare 00003507 Ascentcare 00003508 Ascentcare 00003509 Ascentcare 00003510 Ascentcare 00003511 Ascentcare 00003512 Ascentcare 00003513 Ascentcare 00003514 Ascentcare 00003515 Ascentcare 00003529 Ascentcare 00003537 Ascentcare 00003547 Ascentcare 00003569 Ascentcare 00003574 Ascentcare 00003583 Ascentcare 00003644 Ascentcare 00003661 Ascentcare 00003677 Ascentcare 00003681 Ascentcare 00003688 Ascentcare 00003689 Ascentcare 00003742 Ascentcare 00003780 Ascentcare 00003781 Ascentcare 00003782 Ascentcare 00003783 Ascentcare 00003784 Ascentcare 00003785 Ascentcare 00003786 Ascentcare 00003788 Ascentcare 00003787 Ascentcare 00003789 Ascentcare 00003797
CN102631180 ("Kwong")	April 20, 2012	Ascentcare 00003515- Ascentcare 00003528

Ascentcare incorporates Table 1 above. Ascentcare provides the following prior art combinations for its Initial Invalidity Contentions in relation to the '438 Patent:

- The ’438 Patent is rendered obvious under pre-AIA 35 U.S.C. § 103 in view of patent and/or printed publication in Black in combination with the skill of a DOSA.

- The ’438 Patent is rendered obvious under pre-AIA 35 U.S.C. § 103 in view of patent and/or printed publication in Black in combination with one or two of patent and/or printed publication Park, Hirsch, the ’799 Patent, or Kwong, and the skill of a DOSA.

- The ’438 Patent is rendered obvious under pre-AIA 35 U.S.C. § 103 in view of patent and/or printed publication in Black in combination with one or two of the public use or sale of AirBug or the Isolite Mouthpiece, and the skill of a DOSA.

- The ’438 Patent is rendered obvious under pre-AIA 35 U.S.C. § 103 in view of the public use or sale of AirBug in combination with the skill of a DOSA.

- The ’438 Patent is rendered obvious under pre-AIA 35 U.S.C. § 103 in view of the public use or sale of AirBug in combination with one of patent, printed publication, sale, or public use of Black, Park, the ’799 Patent, Hirsch, the Isolite Mouthpiece, or Kwong, and the skill of a DOSA.

- The ’438 Patent is rendered obvious under pre-AIA 35 U.S.C. § 103 in view of patent and/or printed publication in Park in combination with the skill of a DOSA.

- The ’438 Patent is rendered obvious under pre-AIA 35 U.S.C. § 103 in view of patent and/or printed publication in Park in combination with one of patent and/or printed publication Black, Hirsch, the ’799 Patent, or Kwong, and the skill of a DOSA.

- The ’438 Patent is rendered obvious under pre-AIA 35 U.S.C. § 103 in view of patent and/or printed publication in Park in combination with one of the public use or sale of AirBug or the Isolite Mouthpiece, and the skill of a DOSA.

- The ’438 Patent is rendered obvious under pre-AIA 35 U.S.C. § 103 in view of patent and/or printed publication in the ’799 Patent in combination with the skill of a DOSA.

- The ’438 Patent is rendered obvious under pre-AIA 35 U.S.C. § 103 in view of patent and/or printed publication in the ’799 Patent in combination with one of patent and/or printed publication Black, Park, Hirsch, or Kwong, and the skill of a DOSA.

- The ’438 Patent is rendered obvious under pre-AIA 35 U.S.C. § 103 in view of patent and/or printed publication in the ’799 Patent in combination with one of the public use or sale of AirBug or the Isolite Mouthpiece, and the skill of a DOSA.

- The ’438 Patent is rendered obvious under pre-AIA 35 U.S.C. § 103 in view of patent and/or printed publication in Hirsch in combination with the skill of a DOSA.

- The ’438 Patent is rendered obvious under pre-AIA 35 U.S.C. § 103 in view of patent and/or printed publication in Hirsch in combination with one of patent and/or printed publication Black, Park, the ’799 Patent, or Kwong, and the skill of a DOSA.

- The ’438 Patent is rendered obvious under pre-AIA 35 U.S.C. § 103 in view of patent and/or printed publication in Hirsch in combination with one of the public use or sale of AirBug or the Isolite Mouthpiece, and the skill of a DOSA.

- The ’438 Patent is rendered obvious under pre-AIA 35 U.S.C. § 103 in view of the public use or sale of Isolite Mouthpiece in combination with the skill of a DOSA.

- The ’438 Patent is rendered obvious under pre-AIA 35 U.S.C. § 103 in view of the public use or sale of Isolite Mouthpiece in combination with one of patent, printed publication, sale, or public use of Black, Park, the ’799 Patent, Hirsch, the Isolite Mouthpiece, or Kwong, and the skill of a DOSA.

- The ’438 Patent is rendered obvious under pre-AIA 35 U.S.C. § 103 in view of patent and/or printed publication in Kwong in combination with the skill of a DOSA.

- The ’438 Patent is rendered obvious under pre-AIA 35 U.S.C. § 103 in view of patent and/or printed publication in Kwong in combination with one of patent and/or printed publication Black, Park, or the ’799 Patent, Hirsch, and the skill of a DOSA.

- The ’438 Patent is rendered obvious under pre-AIA 35 U.S.C. § 103 in view of patent and/or printed publication in Kwong in combination with one of the public use or sale of AirBug or the Isolite Mouthpiece, and the skill of a DOSA.

The prior art noted renders the Asserted Patents anticipated, or in the alternative obvious, in combination with the knowledge of a PHOSITA and/or the secondary references cited, renders the Asserted Patents as obvious. Ascentcare also incorporates by reference each and every item of prior art identified or described in the prosecution of the Asserted Patents and related applications, including the statements made by the applicant(s), and any additional prior art discussed herein to establish the state of the art at the purported time of invention.

2. The ’439 Patent

INVALIDATING PRIOR ART APPLICABLE TO THE ’439 PATENT (ALLEGED PRIORITY DATE: December 9, 2013)

Prior Art Title	Availability Date	Exemplary Bates
U.S. Patent No. 8,029,280 ("Black")	September 26, 2008	Ascentcare 00003583- Ascentcare 00003643
AirBug Mouthpiece	As early as 2009	Ascentcare 00003481 Ascentcare 00003485 Ascentcare 00003486 Ascentcare 00003487 Ascentcare 00003488 Ascentcare 00003489 Ascentcare 00003490 Ascentcare 00003491 Ascentcare 00003492 Ascentcare 00003493 Ascentcare 00003494 Ascentcare 00003495 Ascentcare 00003496 Ascentcare 00003497 Ascentcare 00003498 Ascentcare 00003499 Ascentcare 00003500 Ascentcare 00003501 Ascentcare 00003502 Ascentcare 00003503 Ascentcare 00003504 Ascentcare 00003505 Ascentcare 00003506 Ascentcare 00003507 Ascentcare 00003508 Ascentcare 00003509 Ascentcare 00003510 Ascentcare 00003511 Ascentcare 00003512 Ascentcare 00003513 Ascentcare 00003514 Ascentcare 00003515 Ascentcare 00003529 Ascentcare 00003537 Ascentcare 00003547 Ascentcare 00003569 Ascentcare 00003574 Ascentcare 00003583 Ascentcare 00003644 Ascentcare 00003661 Ascentcare 00003677 Ascentcare 00003681 Ascentcare 00003688

Prior Art Title	Availability Date	Exemplary Bates
		Ascentcare 00003689 Ascentcare 00003742 Ascentcare 00003780 Ascentcare 00003781 Ascentcare 00003782 Ascentcare 00003783 Ascentcare 00003784 Ascentcare 00003785 Ascentcare 00003786 Ascentcare 00003788 Ascentcare 00003787 Ascentcare 00003789 Ascentcare 00003797 Ascentcare 00003802 Ascentcare 00003803 Ascentcare 00003804 Ascentcare 00003805
Korean Patent No. 10-1082826 ("Park")	January 20, 2010	Ascentcare 00003537- Ascentcare 00003546
D495,799	February 27, 2003	Ascentcare 00003677- Ascentcare 00003680
U.S. Patent Application No. 2003/0134253 ("Hirsch")	February 27, 2003	Ascentcare 00003547- Ascentcare 00003568
Isolite Mouthpiece	As early as 2002	Ascentcare 00003498 Ascentcare 00003499 Ascentcare 00003500 Ascentcare 00003501 Ascentcare 00003502 Ascentcare 00003503 Ascentcare 00003504 Ascentcare 00003505 Ascentcare 00003506 Ascentcare 00003507 Ascentcare 00003508 Ascentcare 00003509 Ascentcare 00003510 Ascentcare 00003511 Ascentcare 00003512 Ascentcare 00003513 Ascentcare 00003514 Ascentcare 00003515 Ascentcare 00003529

Prior Art Title	Availability Date	Exemplary Bates
		Ascentcare 00003537 Ascentcare 00003547 Ascentcare 00003569 Ascentcare 00003574 Ascentcare 00003583 Ascentcare 00003644 Ascentcare 00003661 Ascentcare 00003677 Ascentcare 00003681 Ascentcare 00003688 Ascentcare 00003689 Ascentcare 00003742 Ascentcare 00003780 Ascentcare 00003781 Ascentcare 00003782 Ascentcare 00003783 Ascentcare 00003784 Ascentcare 00003785 Ascentcare 00003786 Ascentcare 00003788 Ascentcare 00003787 Ascentcare 00003789 Ascentcare 00003797
CN102631180 ("Kwong")	April 20, 2012	Ascentcare 00003515- Ascentcare 00003528

Ascentcare incorporates Table 1 above. Ascentcare provides the following prior art combinations for its Initial Invalidity Contentions in relation to the '439 Patent:

- The '439 Patent is rendered obvious under pre-AIA 35 U.S.C. § 103 in view of patent and/or printed publication in Black in combination with the skill of a DOSA.
- The '439 Patent is rendered obvious under pre-AIA 35 U.S.C. § 103 in view of patent and/or printed publication in Black in combination with one of patent and/or printed publication Park, Hirsch, the '799 Patent, or Kwong, and the skill of a DOSA.
- The '439 Patent is rendered obvious under pre-AIA 35 U.S.C. § 103 in view of patent and/or printed publication in Black in combination with one of the public use or sale of AirBug or the Isolite Mouthpiece, and the skill of a DOSA.
- The '439 Patent is rendered obvious under pre-AIA 35 U.S.C. § 103 in view of the public use or sale of AirBug in combination with the skill of a DOSA.

- The ’439 Patent is rendered obvious under pre-AIA 35 U.S.C. § 103 in view of the public use or sale of AirBug in combination with one of patent, printed publication, sale, or public use of Black, Park, the ’799 Patent, Hirsch, the Isolite Mouthpiece, or Kwong, and the skill of a DOSA.

- The ’439 Patent is rendered obvious under pre-AIA 35 U.S.C. § 103 in view of patent and/or printed publication in Park in combination with the skill of a DOSA.

- The ’439 Patent is rendered obvious under pre-AIA 35 U.S.C. § 103 in view of patent and/or printed publication in Park in combination with one of patent and/or printed publication Black, Hirsch, the ’799 Patent, or Kwong, and the skill of a DOSA.

- The ’439 Patent is rendered obvious under pre-AIA 35 U.S.C. § 103 in view of patent and/or printed publication in Park in combination with one of the public use or sale of AirBug or the Isolite Mouthpiece, and the skill of a DOSA.

- The ’439 Patent is rendered obvious under pre-AIA 35 U.S.C. § 103 in view of patent and/or printed publication in the ’799 Patent in combination with the skill of a DOSA.

- The ’439 Patent is rendered obvious under pre-AIA 35 U.S.C. § 103 in view of patent and/or printed publication in the ’799 Patent in combination with one of patent and/or printed publication Black, Park, Hirsch, or Kwong, and the skill of a DOSA.

- The ’439 Patent is rendered obvious under pre-AIA 35 U.S.C. § 103 in view of patent and/or printed publication in the ’799 Patent in combination with one of the public use or sale of AirBug or the Isolite Mouthpiece, and the skill of a DOSA.

- The ’439 Patent is rendered obvious under pre-AIA 35 U.S.C. § 103 in view of patent and/or printed publication in Hirsch in combination with the skill of a DOSA.

- The ’439 Patent is rendered obvious under pre-AIA 35 U.S.C. § 103 in view of patent and/or printed publication in Hirsch in combination with one of patent and/or printed publication Black, Park, the ’799 Patent, or Kwong, and the skill of a DOSA.

- The ’439 Patent is rendered obvious under pre-AIA 35 U.S.C. § 103 in view of patent and/or printed publication in Hirsch in combination with one of the public use or sale of AirBug or the Isolite Mouthpiece, and the skill of a DOSA.

- The ’439 Patent is rendered obvious under pre-AIA 35 U.S.C. § 103 in view of the public use or sale of Isolite Mouthpiece in combination with the skill of a DOSA.

- The ’439 Patent is rendered obvious under pre-AIA 35 U.S.C. § 103 in view of the public use or sale of Isolite Mouthpiece in combination with one of patent, printed

publication, sale, or public use of Black, Park, the ’799 Patent, Hirsch, the Isolite Mouthpiece, or Kwong, and the skill of a DOSA.

- The ’439 Patent is rendered obvious under pre-AIA 35 U.S.C. § 103 in view of patent and/or printed publication in Kwong in combination with the skill of a DOSA.

- The ’439 Patent is rendered obvious under pre-AIA 35 U.S.C. § 103 in view of patent and/or printed publication in Kwong in combination with one of patent and/or printed publication Black, Park, or the ’799 Patent, Hirsch, and the skill of a DOSA.

- The ’439 Patent is rendered obvious under pre-AIA 35 U.S.C. § 103 in view of patent and/or printed publication in Kwong in combination with one of the public use or sale of AirBug or the Isolite Mouthpiece, and the skill of a DOSA.

The prior art noted renders the Asserted Patents anticipated, or in the alternative obvious, in combination with the knowledge of a PHOSITA and/or the secondary references cited, renders the Asserted Patents as obvious. Ascentcare also incorporates by reference each and every item of prior art identified or described in the prosecution of the Asserted Patents and related applications, including the statements made by the applicant(s), and any additional prior art discussed herein to establish the state of the art at the purported time of invention.

3. The ’436 Patent

INVALIDATING PRIOR ART APPLICABLE TO THE ’436 PATENT (ALLEGED PRIORITY DATE: May 8, 2020)

Prior Art Title	Availability Date	Exemplary Bates
U.S. Patent No. 8,911,232 (“Nguyen”)	December 7, 2012	Ascentcare 00003644- Ascentcare 00003660
DryShield Autoclavable Mouthpiece (“DM1”)	On or around 2012.	Ascentcare 00003485 Ascentcare 00003486 Ascentcare 00003487 Ascentcare 00003488 Ascentcare 00003489 Ascentcare 00003490 Ascentcare 00003491 Ascentcare 00003492 Ascentcare 00003493

Prior Art Title	Availability Date	Exemplary Bates
		Ascentcare 00003494 Ascentcare 00003495 Ascentcare 00003496 Ascentcare 00003497
D495,799 (“The ’799 Patent)	February 2, 2003	Ascentcare 00003677- Ascentcare 00003680
D735,858 (“The ’858 Patent)	May 22, 2014	Ascentcare 00003681- Ascentcare 00003687
U.S. Patent Application No. 2003/0134253 (“Hirsch”)	February 27, 2003	Ascentcare 00003547- Ascentcare 00003568
U.S. Patent No. 9,532,858 (“Hirsch 2”)	May 22, 2014	Ascentcare 00003661- Ascentcare 00003676
U.S. Patent No. 8,029,280 (“Black”)	September 26, 2008	Ascentcare 00003583- Ascentcare 00003643
AirBug	As early as 2009	Ascentcare 00003481 Ascentcare 00003485 Ascentcare 00003486 Ascentcare 00003487 Ascentcare 00003488 Ascentcare 00003489 Ascentcare 00003490 Ascentcare 00003491 Ascentcare 00003492 Ascentcare 00003493 Ascentcare 00003494 Ascentcare 00003495 Ascentcare 00003496 Ascentcare 00003497 Ascentcare 00003498 Ascentcare 00003499 Ascentcare 00003500 Ascentcare 00003501 Ascentcare 00003502 Ascentcare 00003503 Ascentcare 00003504 Ascentcare 00003505 Ascentcare 00003506 Ascentcare 00003507 Ascentcare 00003508 Ascentcare 00003509 Ascentcare 00003510

Prior Art Title	Availability Date	Exemplary Bates
		Ascentcare 00003511 Ascentcare 00003512 Ascentcare 00003513 Ascentcare 00003514 Ascentcare 00003515 Ascentcare 00003529 Ascentcare 00003537 Ascentcare 00003547 Ascentcare 00003569 Ascentcare 00003574 Ascentcare 00003583 Ascentcare 00003644 Ascentcare 00003661 Ascentcare 00003677 Ascentcare 00003681 Ascentcare 00003688 Ascentcare 00003689 Ascentcare 00003742 Ascentcare 00003780 Ascentcare 00003781 Ascentcare 00003782 Ascentcare 00003783 Ascentcare 00003784 Ascentcare 00003785 Ascentcare 00003786 Ascentcare 00003788 Ascentcare 00003787 Ascentcare 00003789 Ascentcare 00003797 Ascentcare 00003802 Ascentcare 00003803 Ascentcare 00003804 Ascentcare 00003805
Mr. Thirsty Mouthpiece	As early as 2012	Ascentcare 00003504 Ascentcare 00003505 Ascentcare 00003506 Ascentcare 00003507
US20140349249 ("Reyes")	May 24, 2013	Ascentcare 00003827- Ascentcare 00003836

Ascentcare incorporates Table 1 above. Ascentcare provides the following prior art combinations for its Initial Invalidity Contentions in relation to the '436 Patent:

- The ’436 Patent is anticipated under 35 U.S.C. § 102 in view of patent and/or printed publication in Nguyen.
- The ’436 Patent is anticipated under 35 U.S.C. § 102 in view of the public use or sale of DM1.
- The ’436 Patent is rendered obvious under 35 U.S.C. § 103 in view of patent and/or printed publication in Nguyen in combination with the skill of a DOSA.
- The ’436 Patent is rendered obvious under 35 U.S.C. § 103 in view of the public use or sale of DM1 in combination with the skill of a DOSA.
- The ’436 Patent is rendered obvious under 35 U.S.C. § 103 in view of patent and/or printed publication Nguyen in combination one or two of patent and/or printed publication of Black, the ’799 Patent, the ’858 Patent, Hirsch, or Hirsch 2, and the skill of a DOSA.
- The ’436 Patent is rendered obvious under 35 U.S.C. § 103 in view of patent and/or printed publication Nguyen in combination one or more of public use or sale of AirBug, Mr. Thirsty, or Isolite Mouthpiece, and the skill of a DOSA.
- The ’436 Patent is rendered obvious under 35 U.S.C. § 103 in view of the public use or sale of DM1 in combination one or two of the public use, sale, patent, or printed publication of Black, AirBug, Mr. Thirsty, the ’799 Patent, Hirsch, the ’858 Patent, Hirsch 2, Isolite Mouthpiece, and the skill of a DOSA.

The prior art noted renders the Asserted Patents anticipated, or in the alternative obvious, in combination with the knowledge of a PHOSITA and/or the secondary references cited, renders the Asserted Patents as obvious. Ascentcare also incorporates by reference each and every item of prior art identified or described in the prosecution of the Asserted Patents and related applications, including the statements made by the applicant(s), and any additional prior art discussed herein to establish the state of the art at the purported time of invention.

IV. THE PHOSITA/DOSA.

A PHOSITA in this case would be: a person having at least a degree in mechanical engineering or related field with at least 2 years of experience designing dental devices or suction devices. A DOSA in this case is a person having at least a degree in mechanical engineering, design, or related field with at least 2 years of experience designing dental devices or suction

devices. If a person has a higher level of education, less experience could be acceptable, and vice versa.

V. THE ASSERTED PATENTS ARE INVALID AS ANTICIPATED OR OBVIOUS UNDER 35 U.S.C § 102 AND/OR 103.

The Asserted Claims of the Asserted Patents are invalid under 35 U.S.C. §§ 102 and/or 103. The prior art discussed in this section, *see infra*, anticipate the Asserted Claims expressly or inherently, or in combination with each other, the knowledge of one of ordinary skill in the art, or the prior art cited in the prosecution history, render the Asserted Claims obvious. Exhibits A-I contain claim charts setting forth examples where in the prior art references each element of the Asserted Claims is found. Ascentcare reserves all rights to combine an anticipatory reference or a combination of references with the knowledge of a person having ordinary skill in the art ("PHOSITA") (or DOSA) or any other reference cited in these contentions. In addition, Ascentcare incorporates by reference each and every prior art identified or described in the prosecution of the Asserted Patents, counterpart applications, and related applications, including the statements made therein by the applicant, as well as the prior art discussed in the specification of the Asserted Patents. A list of prior art cited by Solmetex in its patents is below:

Patent/Publication#	Date	Country
2014202637	Dec-13	AU
2016200275	Dec-13	AU
2018213982	Dec-13	AU
2020274979	Dec-20	AU
1120140116377	Dec-13	BR
112021022474	Jan-22	BR
1120210224742	Dec-20	BR

2919142	Dec-13	CA
2851861	Jun-15	CA
3139689	Nov-20	CA
114302667	Apr-22	CN
102026587	Apr-11	CN
102247140	Nov-11	CN
104490483	Apr-15	CN
105578986	May-16	CN
201480039991.2	Dec-12	CN
202080043728.6	Dec-20	CN
16002647	Dec-15	CO
NC2021/0016591	Dec-20	CO
2903557	Aug-15	EP
3184076	Jun-17	EP
3965637	Mar-22	EP
14721736.8	Dec-13	EP
17150671	Dec-13	EP
20804801.7	Dec-20	EP
2992161	Dec-13	FR
2170106	Jul-86	GB
201617018861	Dec-15	IN
202117051466	Dec-20	IN
2015-563172	Dec-14	JP
2016-125196	Dec-13	JP
2017-518859	Jul-17	JP
2022-514453	Dec-20	JP
2022-533276	Jul-22	JP

100654392	Dec-06	KR
20220103035	Jul-22	KR
10-2016-7012389	Dec-15	KR
10-2021-7040518	Dec-20	KR
2021013694	Apr-22	MX
MX/a/2016/002240	Dec-15	MX
MX/a/2021/013694	Dec-20	MX
718848	Dec-15	NZ
782154	Dec-20	NZ
1-2016-500682	Dec-15	PH
1-2021-552855	Dec-20	PH
2016126980	Dec-15	RU
11202112319	Dec-20	SG
11201604442V	Dec-15	SG
202108088	Mar-21	TW
00/42939	Jul-00	WO
00/61031	Oct-00	WO
1999/037238	Jul-99	WO
2011/014952	Feb-11	WO
2015/088577	Jun-15	WO
2018/126150	Jul-18	WO
2020/231864	Nov-20	WO
PCT/US2014/032892	Dec-13	WO
PCT/US2020/032228	Dec-19	WO
50461	10/1/1865	US
1471207	Oct-23	US
1731322	Oct-29	US

2019612	Nov-35	US
2937445	May-60	US
3090122	May-63	US
3379192	Dec-67	US
3453735	Jul-69	US
3489141	Dec-69	US
3516160	Jun-70	US
3758950	Sep-73	US
3768477	Oct-73	US
3802081	Apr-74	US
3857181	Dec-74	US
3877691	Apr-75	US
3924333	Dec-75	US
4017975	Apr-77	US
4024642	May-77	US
4083115	Apr-78	US
4167814	Sep-79	US
4192071	Mar-80	US
4237574	Dec-79	US
4511329	Apr-85	US
4718662	Jan-88	US
4802851	Feb-89	US
4822278	Apr-89	US
4975057	Dec-90	US
5009595	Apr-91	US
5037298	Aug-91	US
5078602	Jan-92	US

5365624	Dec-93	US
5460524	Oct-95	US
5516286	May-96	US
5588836	Dec-96	US
5720275	Feb-98	US
5730599	Mar-98	US
5762496	Jun-98	US
5890899	Apr-99	US
6022214	Feb-00	US
6213772	Apr-01	US
6223376	Dec-00	US
6241521	Jun-01	US
6338627	Jan-02	US
6575746	Jun-03	US
6652276	Nov-03	US
6655960	Dec-03	US
6672305	Jan-04	US
6716029	Apr-04	US
6908308	Jun-05	US
6974321	Dec-05	US
7287981	Oct-07	US
7293990	Nov-07	US
7611354	Nov-09	US
8241035	Dec-11	US
8745802	Dec-13	US
9526597	Dec-15	US
10575976	Dec-19	US

10869541	Dec-19	US
10945593	Dec-20	US
11160644	Dec-20	US
11191624	Dec-20	US
11737739	Dec-22	US
11744686	Dec-22	US
11793617	Dec-22	US
11826217	Dec-22	US
12011329	Dec-23	US
10390734	19-Aug	US
10390916	19-Aug	US
10939979	21-Mar	US
11576764	23-Feb	US
11589969	23-Feb	US
11589970	23-Feb	US
14/100,323	Dec-13	US
14/228,046	Mar-14	US
14/228,050	Mar-14	US
14/228,054	Mar-14	US
14/228,057	Mar-14	US
14/228,061	Mar-14	US
16/870,745	May-20	US
18/217,304	Jun-23	US
18/376,309	Oct-23	US
2001/0008752	1-Jul	US
2002/0082544	Dec-01	US
2003/0134253	3-Jul	US

2004/0033468	4-Feb	US
2005/0214713	Dec-04	US
2006/0063126	6-Mar	US
2006/0063129	6-Mar	US
2006/0084031	6-Apr	US
2008/0166684	8-Jul	US
2008/0318183	Dec-08	US
2009/0117506	Dec-08	US
2009/0123886	9-May	US
2009/0208898	Dec-08	US
2009/0274991	Nov-09	US
2010/0062397	Dec-09	US
2011/0207076	11-Aug	US
2011/0311942	Dec-11	US
2012/0015317	12-Jan	US
2012/0015320	12-Jan	US
2012/0077144	Dec-11	US
2012/0115102	Dec-11	US
2012/0219926	Dec-11	US
2012/0237894	12-Sep	US
2013/0055513	Dec-12	US
2013/0081217	Dec-12	US
2013/0095450	13-Apr	US
2013/0252193	13-Sep	US
2014/0004478	14-Jan	US
2014/0162209	14-Jun	US
2014/0212837	14-Jul	US

2014/0212838	14-Jul	US
2014/0212839	14-Jul	US
2014/0212840	14-Jul	US
2014/0212841	14-Jul	US
2014/0272761	Dec-13	US
2014/0349249	Nov-14	US
2015/0305842	Oct-15	US
2015/0335409	Nov-15	US
2016/0270892	Dec-15	US
2017/0056143	Dec-16	US
2017/0156831	17-Jun	US
2017/0156832	17-Jun	US
2017/0156833	17-Jun	US
2018/0153637	18-Jun	US
2018/0368957	Dec-17	US
2020/0155284	20-May	US
2020/0178680	Dec-19	US
2020/0253369	Dec-19	US
2020/0352680	Nov-20	US
2020/0383560	Dec-20	US
2021/0204923	Jul-21	US
2022/0087799	Dec-21	US
2022/0378563	Dec-22	US
2023/0338124	Oct-23	US
2023/0363747	Nov-23	US
2024/0024072	Jan-24	US
2024/0115366	Dec-23	US

29/477,088	Dec-13	US
29/477,887	Dec-13	US
29/477,888	Dec-13	US
29/491,367	May-14	US
29/780,960	Apr-21	US
29/782,638	May-21	US
29/782,643	May-21	US
29/782,644	May-21	US
29/782,645	May-21	US
29/893,986	Jun-23	US
29/950,231	Jul-24	US
29/950,233	Jul-24	US
6267591	Jul-01	US
7748981	10-Jul	US
8029280	Oct-11	US
8057227	Nov-11	US
8057228	Nov-11	US
8075310	Dec-11	US
8297973	Oct-12	US
8529256	13-Sep	US
8535056	13-Sep	US
8911232	Dec-14	US
9084656	15-Jul	US
9089389	15-Jul	US
9358086	16-Jun	US
9788924	Oct-17	US
9968341	18-May	US

D1033650	Dec-23	US
D1037436	Dec-23	US
D267586	Jan-83	US
D364456	Nov-95	US
D495799	Sep-04	US
D497426	Oct-04	US
D615203	May-10	US
D663831	12-Jul	US
D666726	12-Sep	US
D696779	Dec-13	US
D734851	15-Jul	US
D735858	15-Aug	US
D737964	15-Sep	US
D782047	17-Mar	US
D782048	17-Mar	US
D787069	17-May	US
D787070	17-May	US
D809660	18-Feb	US
D833029	Dec-17	US
D868958	Dec-19	US
D876627	20-Feb	US
D962438	22-Aug	US
D962439	22-Aug	US

To the extent any element is not provided by an expressly enabling disclosure by the prior art cited in the attached claim charts, all elements of the Asserted Claims of the Asserted Patents would still be the inherent result of putting into practice the methods and apparatuses described by

the prior art referenced herein. In particular, each anticipatory prior art may be combined with: (1) information known to persons skilled in the art at the time of the alleged invention; (2) any of the other anticipatory prior art; and/or (3) any of the additional prior art identified above.

To the extent one or more prior art references are combined to render the Asserted Claims obvious, a PHOSITA or DOSA would have been motivated to make such combinations with a reasonable expectation of success. As the United States Supreme Court held in *KSR Int'l Co. v. Teleflex, Inc.*, "[t]he combination of familiar elements according to known methods is likely to be obvious when it does no more than yield predictable results." 127 S. Ct. 1727, 1739 (2007). The Supreme Court further held that, "[w]hen a work is available in one field of endeavor, design incentives and other market forces can prompt variations of it, either in the same field or a different one. If a person of ordinary skill can implement a predictable variation, § 103 likely bars its patentability. For the same reason, if a technique has been used to improve one device, and a person of ordinary skill in the art would recognize that it would improve similar devices in the same way, using the technique is obvious unless its actual application is beyond his or her skill." *Id.* at 1740.

Moreover, the Supreme Court held that a person of ordinary skill in the art is "a person of ordinary creativity, not an automaton" and "in many cases a person of ordinary skill will be able to fit the teachings of multiple patents together like pieces of a puzzle." *Id.* at 1742. Indeed, the Supreme Court held that it is sufficient that a combination of elements was "obvious to try," holding that "[w]hen there is a design need or market pressure to solve a problem and there are a finite number of identified, predictable solutions, a person of ordinary skill has good reason to pursue the known options within his or her technical grasp. If this leads to the anticipated success, it is likely the product not of innovation but of ordinary skill and common sense." *Id.* "In that

instance the fact that a combination was obvious to try might show that it was obvious under § 103." *Id.* "Rigid preventative rules that deny factfinders recourse to common sense, however, are neither necessary under our case law nor consistent with it." *Id.* Finally, the Supreme Court recognized that "[g]ranting patent protection to advances that would occur in the ordinary course without real innovation retards progress and may, in the case of patents combining previously known elements, deprive prior inventions of their value or utility." *Id.* at 1741.

Accordingly, one of ordinary skill in the art would have recognized that the results of certain combinations were predictable and would have been clearly motivated to modify and combine the prior art items identified above to arrive at the alleged inventions of Asserted Claims of the Asserted Patents. Indeed, at least the following rationales support a finding of obviousness based on the combinations set forth in detail below:

(A) combining prior art elements according to known methods to yield predictable results;

(B) simple substitution of one known element for another to obtain predictable results;

(C) use of a known technique to improve similar devices (methods, or products) in the same way;

(D) applying a known technique to a known device (method, or product) ready for improvement to yield predictable results;

(E) "obvious to try"—choosing from a finite number of identified, predictable solutions, with a reasonable expectation of success;

(F) known work in one field of endeavor may prompt variations of it for use in either the same field or a different one based on design incentives or other market forces if the variations would have been predictable to one of ordinary skill in the art; and

(G) some teaching, suggestion, or motivation in the prior art that would have led one of ordinary skill to modify the prior art reference or to combine prior art reference teachings to arrive at the claimed invention.

The above analysis also applies to design patents from the perspective of a DOSA. *See e.g. LKQ Corp. v. GM Glob. Tech. Operations LLC*, 102 F.4th 1280 (Fed. Cir. 2024). Here, there

exists a significant number of different prior art dental isolation mouthpieces, and it is customary to vary the shape and appearance of those parts to satisfy the preferences of the dental industry. In other words, the inventors of the Asserted Design Patents merely combined known design elements using ordinary skill—there is nothing new or unique about the designs other than perhaps the specific geometries and angles, which are minimally different, driven by the design of other parts, and obvious to a DOSA. Historically, such a design process and resultant design has been found to result in an obvious design. *See e.g. LKQ v. GM*, 102 F.4th at 1297 ("The Supreme Court explained that the record evidence showed that there were several hundred types of saddles, 'and that it was customary for saddlers to vary the shape and appearance of saddletrees [saddle frames] in numerous ways, according to the taste and fancy of the purchaser.' . . . Addressing the combination of the Granger and Jenifer saddles, the Court determined that '[n]othing more was done in this instance (except as hereafter noted) than to put the two halves of these saddles together in the exercise of the ordinary skill of workmen of the trade, and in the way and manner ordinarily done,' and that 'the addition of a known cantle to a known saddle, in view of the fact that such use of the cantle was common,' did not make the claimed saddle design inventive.") (quoting *Smith v. Whitman Saddle Co.*, 148 U.S. 674, 680 (1893)); *see also KSR*, 550 U.S. at 415-416 ("For over a half century, the Court has held that a 'patent for a combination which only unites old elements with no change in their respective functions . . . obviously withdraws what already is known into the field of its monopoly and diminishes the resources available to skillful men' . . . This is a principal reason for declining to allow patents for what is obvious. The combination of familiar elements according to known methods is likely to be obvious when it does no more than yield predictable results.") (citing *Great Atlantic & Pacific Tea Co. v. Supermarket Equipment Corp.*, 340 U.S. 147, 152-153 (1950).

Further, Solmetex contends that "each Asserted Patent enjoys a statutory presumption of validity. 35 U.S.C. § 282." However, given that each of the design patents were examined under the previous *Rosen-Durling* test which has since been overturned in May of 2024 in favor of a *Graham* factor analysis, and the latest-examined design patent issued in this case had a Notice of Allowance dated April 1, 2024, Ascentcare contends that Solmetex's design patents are not entitled to a presumption of validity.

A. The Scope and Content of the Prior Art, the Skill of a PHOSITA/DOSA, and Rationales to Combine or Modify a Primary Reference.

The scope and content of the prior art helps to inform the skill of a PHOSITA/DOSA and the rationales they use to modify a product or design. The scope and content of the prior art includes, at a minimum, every reference cited by patentee and the examiner during the course of the prosecution of any of the Asserted Patents. *See Elektra Ltd. v. Zap Surgical Systems*, 81 F. 4th 1368, 1375 (Fed. Cir. 2023). Given the vast array of prior art references Solmetex itself cited during the prosecution of its patents, including *inter alia*, saliva ejectors dating back to 1927 (*see* § V) (*see e.g.* United States Patent No. 1,731,322 cited on the face of the '969 Patent), dental appliances dating back to 1956 (*see e.g.* United States Patent No. 2,937,445 cited on the face of the '969 Patent), X-ray tube and x-ray screen supporting structures dating back to 1933 (*see e.g.* United States Patent No. 2,019,612 cited on the face of the '436 Patent) Solmetex admits that the scope and content of the prior art includes generally medical and dental products. The below analysis is exemplary analysis demonstrative of the scope and content of the prior art, the skill of a DOSA, and the rationales to combine or modify a primary reference.

Ascentcare further intends to rely on the history and development of dental isolation mouthpieces as evidence of the skill of a PHOSITA/DOSA and their rationales to combine or modify primary references. As just one example, dental isolation mouthpieces date back to the

1960s with the Erickson Vac-Ejector, a multi-part mouthpiece that provided evacuation, a bite block, and a tongue retractor (*see e.g.* United States Patent No. 3,090,122, cited on the face of the '969 Patent). However, the Erickson Vac-Ejector was burdensome to put together from multiple pieces (*see e.g.* https://www.youtube.com/watch?v=CJYqwim4wRw), and the desire for lighting within a patient's mouth, which led to the development of a an isolation mouthpiece in 1977 (*see e.g.* U.S. Patent No. 4,024,642 ("Zorovich"), cited on the face of the 969 Patent, which provided a dental appliance that combined a suction tube, a tongue shield, a cheek retractor, and a bite block. The Zorovich design eventually led way to Hirsch's design in 1998 (*see e.g.* United States Patent No. 6,022,214, cited on the face of the '969 Patent), which provided a multi-part mouthpiece with a bite block, tongue/cheek retractor attached via a neck, a suction connector, and a main body portion that effectuated the suction. Over the years, the inventors of the '214 Patent further iterated on those mouthpieces to make it a single piece, improve light distribution, improve the fit in patient's mouths, and improve manufacturability, and those improvements eventually resulted in additional patents (*see e.g.* United States Patent No. 6,575,746, cited on the face of the '969 Patent). Those mouthpieces eventually became the foundation of the Zyris Isolite system, which debuted in 2002. Since then, several iterations of these types of isolation mouthpieces with minor modifications, iterations, and changes have been part of the dental market all over the world, for example:

Patent	**Exemplary Figure Disclosed**

US3,090,122 (1961)	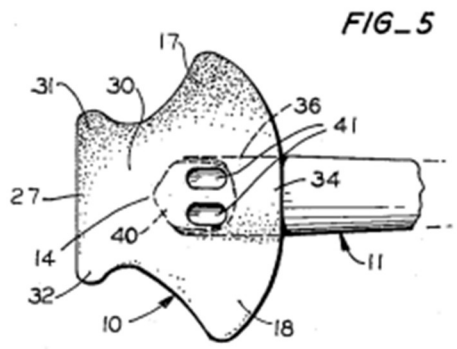
US4,024,642 (1975)	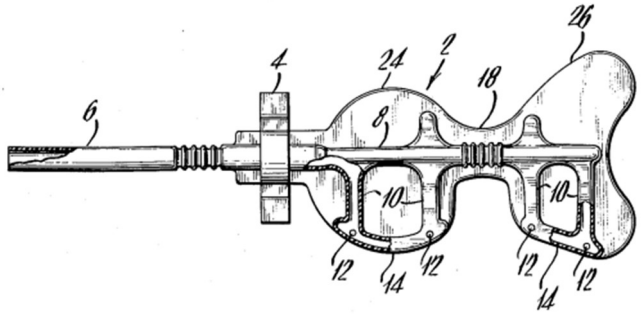
KR100654392 (2005)	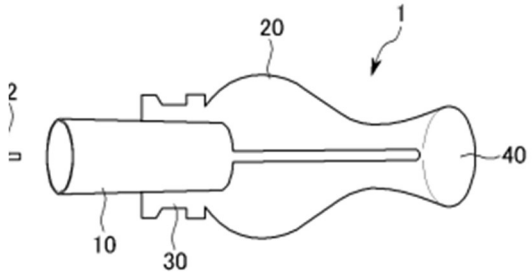

	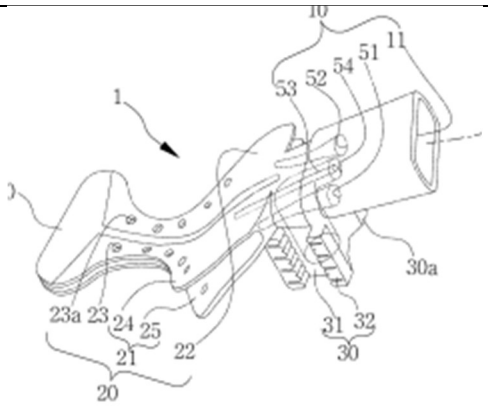
KR20100083207 (2009)	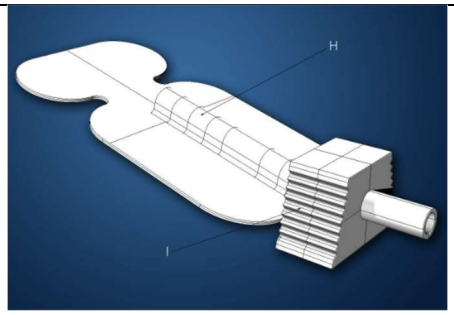
KR101217041 (2010)	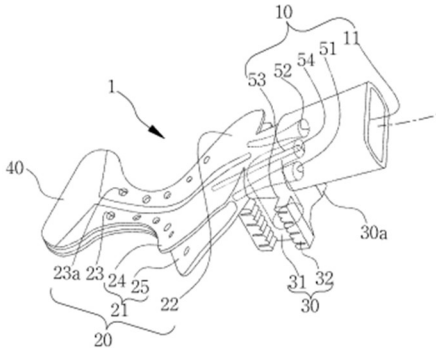
CN102631180 (2012)	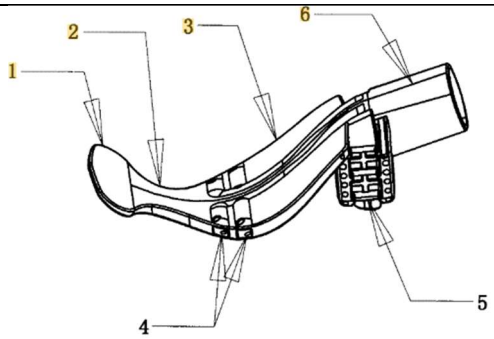

Izolation EZ DAM (Approx. 2014)	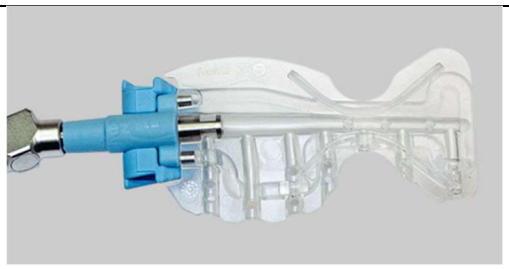
US D735,858 (2014)	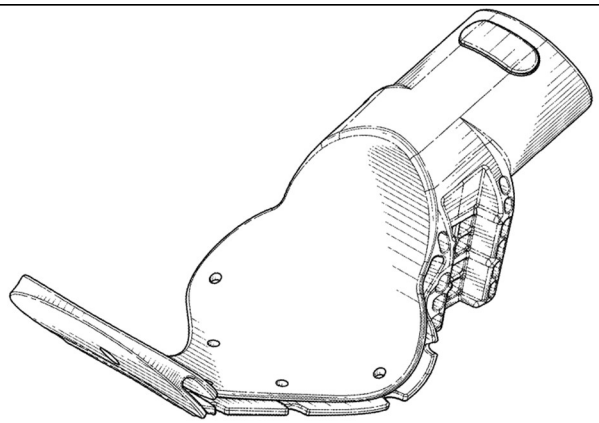
CN105342717 (2015)	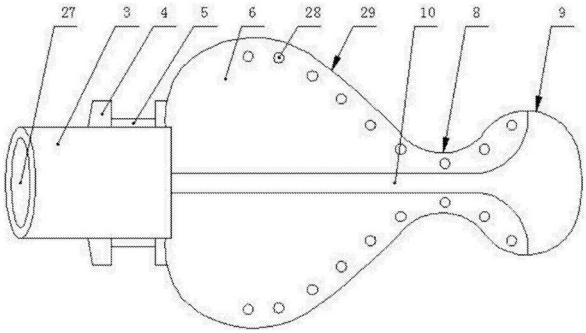
CN20151001367	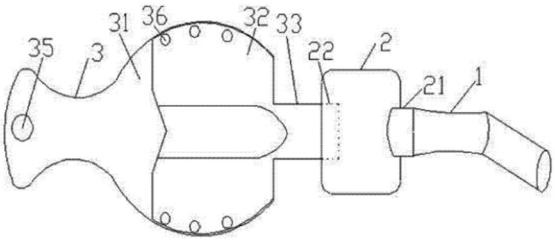 图 1

CN108042228 (2017)	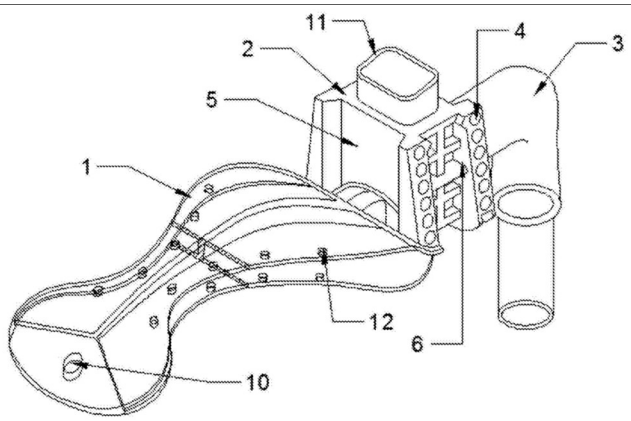

Further, although the above discusses generally isolation mouthpieces, each of the claimed elements of each mouthpiece, and all of the variations or iterations of those elements, are also well-known in the art by a PHOSITA/DOSA. For example, bite-blocks are well known to be quadrilateral (typically rhombus to accommodate the hinge nature of a human jaw) in shape, with minor variations in design for patient comfort. Likewise, it is also well known for cheek retractors, and their minor variations or iterations, to be shaped in a way such that the cheek retractor can make contact across a vertical axis on the cheek. It was equally well-known that mouthpieces should have a generally hour-glass shape with a wide part for the intraoral cavity, a narrow part to fit behind teeth, and another wider cheek retractor. Various anti-collapse structures were also known (spines, projections, transverse walls). Similarly, it is well known for suction connectors to be configured to attach to a suction adaptor of choice. In fact, every feature described in the Asserted utility patents is present in the prior art.

B. As Demonstrated in Ascentcare's Invalidity Charts, the Prior Art Renders the Asserted Patents Anticipated and/or Obvious.[3]

[3] Nearly every prior art reference cited within these charts contain elements common to all isolation mouthpieces. Such elements include, for example, a cheek retractor connected to the main body via a neck, a suction connector, and a bite block.

1. The ’969 Patent

Many of the features of the Asserted Patents are known in the prior art, as shown by the attached claim charts, and the table below. Ascentcare reserves the right to rely on references in the table below to supplement or replace the prior art in the attached claim charts. For example, Ascentcare reserves the right to use Hirsch or Isolite instead of Black or AirBug for the claim elements shown below:

US 11,589,969	Prior Art
Independent Claim 19. A dental mouthpiece comprising:	Hirsch ‘321: FIG. 1, Abstract[4] Black: Abstract KR101217041: FIG. 1 – applicator 1 KR101082826: FIGS. 2 and 3, Abstract KR100654392: FIG. 1, Abstract CN102631180: FIGS. 1-3 Johnson: FIG. 2, Abstract Zorovich: Abstract.
Limitation 19(a): a main body portion configured as a pocket at least partially enclosing an interior space, the pocket defined by:	Hirsch ‘321: FIG. 19A, Refs. 280, 410, claims 1 and 8 Black: FIGS. 4C, 23A-C “the proximal flap 40 a and/or the distal flap 40 b of the tongue shield aspirator 40 may be formed from a first (posterior) layer 48 a and a second (anterior) layer 48 b which are connected to, but spaced apart from, one another by transverse walls 48 c.” KR101217041: FIG. 1, tongue protector 20 KR101082826: FIGS. 2 and 3, Ref. 130 KR100654392: FIG. 1, “the tongue protection portion (20) is shaped in an arch to push the tongue inward, and suction holes (23) and

[4] Discovery is ongoing. To the extent that these charts reference Hirsch, such a reference also includes any embodiments of Hirsch including the Isolite Mouthpiece. To the extent that these charts reference Black, such a reference also includes any embodiments of AirBug and Mr. Thirsty.

	(23a) are formed in each wing (21) and (22) for sucking in oral substances" CN102631180: FIGS. 1-3, reference no. 3 Johnson: FIGS. 2 and 3, saliva ejector 10 Zorovich: FIG. 1, *e.g.*, shield member 2.
Limitation 19(b): a first wall that includes one or more perforations in communication with the interior space of the pocket, the first wall having a shape defined by one or more edges along one or more sides;	Hirsch '321: FIG. 19A, Col. 11 Ln. 52–67 Black: FIGS. 4C, 23A-C, "an open tongue shield aspirator including a first layer having a posterior side, an anterior side, a proximal edge, a distal edge, a bottom edge" KR101217041: FIG. 1, wing 24 and pores 23 KR101082826: FIGS. 2 and 3, anterior wall of tongue retractor 130; [0031] "In addition, multiple through holes (132) can be formed in the tongue traction portion (130)." KR100654392: FIG. 1, "the tongue protection portion (20) is shaped in an arch to push the tongue inward, and suction holes (23) and (23a) are formed in each wing (21) and (22) for sucking in oral substances" CN102631180: FIGS. 1-3, anterior wall of reference no. 3 Johnson: FIG. 3, Plate 32 Zorovich; FIG. 1; front wall of drain channel 8 of system 10 and apertures 12.
Limitation 19(c): a second wall having a shape that corresponds to the shape of the first wall, the shape of the second wall defined by one or more corresponding edges along one or more corresponding sides,	Hirsch '321: FIG. 19A, Col. 11 Ln. 52–67 Black: FIGS. 4C, 23A-C, "a second layer having a posterior side, an anterior side, a proximal edge, a distal edge, a bottom edge, and a top edge, wherein the proximal edges of the first and second layers are substantially flush with each other" KR101217041: FIG. 1, wing 25 KR101082826: FIGS. 2 and 3, posterior wall of tongue retractor 130; KR100654392: FIG. 1, "the tongue protection portion (20) is shaped in an arch to push the tongue inward, and suction holes (23) and

	(23a) are formed in each wing (21) and (22) for sucking in oral substances” CN102631180: FIGS. 1-3, posterior wall of reference no. 3 Johnson: FIG. 3, Plate 30 Zorovich: FIG. 1, rear wall of shield member 2.
Limitation 19(d): wherein the second wall includes a bridge structure that includes a plurality of protrusions integral with and protruding from an interior surface of the second wall within the interior space of the pocket, wherein the protrusions of the bridge structure protrude from the interior surface of the second wall toward the first wall in a wave shape comprising one or more crests and one or more troughs, and	Black: FIG. 23A-C, Ref. 348c Johnson: FIG. 3, Ribs 56, 58. It would be obvious to modify the ribs to have a waveform shape for better suction. Zorovich: protrusions on drain channel 8 near narrow central portion 18 CN102631180: FIGs. 1-3, protective layer 8 and flow passages 71, 72 To the extent any of Hirsch ‘321, KR101217041, KR101082826, KR100654392, and CN102631180 fail to teach limitation 19(d), it would have been obvious for an ordinarily skilled artisan to combine the described characteristics of one or more of the above references with those taught below. The resulting combination would satisfy the requirements of the claimed invention. As a non-limiting example, Hirsch may be combined with Black. The mouthpiece of Hirsch includes four flaps that tend to collapse under pressure and suction. Black teaches transverse walls that keep two parallel walls separated under suction and create channels for suction. In combination, Hirsch would include transverse walls between the anterior and posterior flaps to keep the flaps separated under suction. Hirsch may also be combined with Baughan or Johnson to include anti-collapse structure between the anterior and posterior flaps. Black: FIG. 23A-C, Ref. 348c Baughan: FIG. 2, Ref. 17 Johnson: FIG. 3, Ribs 56, 58. It would be obvious to modify the ribs to have a waveform shape for better suction.
Limitation 19(e):a connecting wall that connects the one or more edges of the first wall to the one or more	Hirsch ‘321: FIGS. 19A, 19C Col. 11 Ln. 52–67 Black: *e.g.,* FIGs. 23A-C, 1, 2A, 3A, 4C, 12, 13, 18 - wall near neck

corresponding edges of the second wall across a span between the first wall and the second wall;	KR101217041: FIG. 1, wall near tube coupling portion 10 KR101082826: FIGS. 2, sidewalls illustrated connecting anterior and posterior walls of tongue retractor 130 KR100654392: FIG. 1, wall near tube connecting portion 10 CN102631180: FIGS. 1-3, connector 6 Johnson: FIG. 3, Interconnecting section 72 Zorovich: FIG. 1, portion of drain channel 8 connecting system 10 to shield member 2
Limitation 19(f): a suction connector portion connected to a first end of the main body portion, the suction connector configured to connect a vacuum source to the interior space of the pocket; and	Hirsch '321: FIG. 19A, Ref. 570 Black: FIG. 4C, 23A-C "a neck 246 defining a transverse anterior opening 247 therethrough." KR101217041: FIG. 1, tube coupling portion 10 KR101082826: FIGS. 2 and 3, [0027] "The insertion port (110) serves as a portion for coupling with the device body (200), with one end open and the interior hollow." KR100654392: FIG. 1, "In addition, the tube connection portion (10) is formed with a tube connecting opening (11) on one side, where a light tube (3) is connected, which operates to suck in oral substances through air suction while the optical fiber (2) is integrated." CN102631180: FIGS. 1 and 3 Johnson: FIG. 2, Vacuum tube 12 Zorovich: FIG. 1, suction tube 6
Limitation 19(g): a cheek retractor connected to a second end of the main body portion, wherein the second end is opposite the first end of the main body portion.	Hirsch '321: FIG. 19A, Ref. 290 Col. 11 Ln. 45–50 Black: FIG. 23A-C – 340b KR101217041: FIG. 1, support portion 40 KR101082826: FIGS. 2 and 3, [0031] "The end of the tongue traction portion may have a slightly curved shape toward the back to ensure that it easily fits within the inside of the opposite cheek." KR100654392: FIG. 1, "During the procedure, the ball support (40) is supported against the inner side of the user's cheek, ultimately

	pushing the cheek outward to create a wider treatment space within the oral cavity." CN102631180: FIGS. 1 and 3 Zorovich: wider terminal portion 26 To the extent Johnson fails to teach limitation 19(g), it would have been obvious for an ordinarily skilled artisan to combine the described characteristics of one or more of Johnson with any of Hirsch '321, Black, KR101217041, KR101082826, KR100654392, CN102631180, or Zorovich. The resulting combination would satisfy the requirements of the claimed invention. As a non-limiting example, Johnson may be combined with Black. The mouthpiece of Johnson includes a flattened body. Black teaches a cheek retractor formed at an end opposite the suction connector to retract cheek tissue. In combination, Johnson would include a cheek retractor to retract cheek tissue during an dental procedure.

Ascentcare's Prior Art Invalidity Charts for the '969 Patent are Attached as Exhibit A-0 through A-3.

2. The '686 Patent

Many of the features of the Asserted Patents are known in the prior art, as shown by the attached claim charts, and the table below. Ascentcare reserves the right to rely on references in the table below to supplement or replace the prior art in the attached claim charts. For example, Ascentcare reserves the right to use Hirsch or Isolite instead of Black or AirBug for the claim elements shown below:

US 11,744,686	Prior Art
Independent Claim 12. A mouthpiece comprising:	Hirsch '321: FIG. 1, Abstract Isolite Mouthpiece Black: Abstract AirBug Mouthpiece Mr. Thirsty

	KR101217041: FIG. 1 – applicator 1 KR101082826: FIGS. 2 and 3, Abstract KR100654392: FIG. 1, Abstract CN102631180: FIGS. 1-3 Johnson: FIG. 2, Abstract Zorovich: Abstract.
Limitation 12(a): a main body having a first end opposite a second end, the first end wider than the second end, the main body comprising:	See Claim 19 of Ex. A-0.
Limitation 12(b): a first wall having a plurality of first edges and extending from the first end to the second end,	See Claim 19 of Ex. A-0.
Limitation 12(c): a second wall having a plurality of second edges and located at a distance from the first wall, the distance corresponding to a space between the first wall and the second wall, wherein the second wall also extends from the first end to the second end,	See Claim 19 of Ex. A-0.
Limitation 12(d): a connecting wall that connects one of the first edges of the first wall to one of the second edges of the second wall across the distance between the first wall and the second wall; and	See Claim 19 of Ex. A-0.
Limitation 12(e): a bridge structure that includes a plurality of protrusions integral with and protruding from an interior surface of the second wall, the bridge structure extending through the interior space towards the first wall, wherein the bridge structure is not attached to the first wall, and wherein the plurality of protrusions of the bridge structure protrude in a wave shape comprising one or more crests and one or more troughs;	See Claim 1 of Ex. C-0.
Limitation 12(f): a suction connector extending from the first end of the main body, wherein an evacuation conduit of the suction connector is in communication with the space between the first wall and the second wall,	See Claim 19 of Ex. A-0 and Claim 9 of C-0.

and wherein the suction connector includes a cutout shape configured to interlock with a corresponding protrusion shape of a vacuum adapter; and	
Limitation 12(g): a cheek retractor at the second end of the main body.	See Claim 19 of Ex. A-0.
Claim 13. The mouthpiece of claim 12, wherein the plurality of protrusions of the bridge structure comprise a plurality of contact points corresponding to the crests of the wave shape, and wherein the troughs correspond to spaces between the contact points.	See Claim 19 of Ex. A-0.
Claim 14. The mouthpiece of claim 12, wherein the first wall and the second wall are bendable, and wherein the bridge structure keeps the first wall separated from the second wall during suction.	See Claim 19 of Ex. A-0.
Claim 15. The mouthpiece of claim 12, wherein at least one of the first wall and the second wall includes one or more perforations distributed along one or more of the first edges or along one or more of the second edges.	See Claim 19 of Ex. A-0.
Claim 17. The mouthpiece of claim 12, wherein the main body is formed by injection-molding as one piece.	See Claim 15 of C-0.
Claim 18. The mouthpiece of claim 17, wherein at least one of the cheek retractor and suction connector is formed by injection-molding and integral with the main body.	See Claim 15 of C-0.
Claim 20. The mouthpiece of claim 12, further comprising a mouth prop connected to the suction connector.	See Claim 1 of C-0.

Ascentcare's Prior Art Invalidity Charts for the '686 Patent are Attached as Exhibit B-0 through B-3.

3. The '970 Patent

Many of the features of the Asserted Patents are known in the prior art, as shown by the attached claim charts, and the table below. Ascentcare reserves the right to rely on references in

the table below to supplement or replace the prior art in the attached claim charts. For example, Ascentcare reserves the right to use Hirsch or Isolite instead of Black or AirBug for the claim elements shown below:

US 11,589,970	Prior Art
Independent Claim 1. A mouthpiece comprising:	See Claim 19 of Ex. A-0.
Limitation 1(a): a main body portion configured as a pocket at least partially enclosing an interior space that extends from a first end to a second end of the main body portion, the pocket defined by:	See Claim 19 of Ex. A-0.
Limitation 1(b): a first wall extending from the first end to the second end, wherein the first wall is narrower at the second end than at the first end,	See Claim 19 of Ex. A-0.
Limitation 1(c): a second wall located at a distance from the first wall and extending from the first end to the second end, wherein the second wall is also narrower at the second end than at the first end,	See Claim 19 of Ex. A-0.
Limitation 1(d): the second wall comprising a bridge structure that includes a plurality of protrusions integral with and protruding from an interior surface of the second wall and extending across the distance between the first wall and the second wall, wherein the bridge structure is not attached to the first wall, and wherein the plurality of protrusions of the bridge structure protrude from the interior surface of the second wall in a wave shape comprising one or more crests and one or more troughs, and	See Claim 19 of Ex. A-0. To the extent any of the references fail to teach a bridge structure unconnected to the first wall, it would have been obvious to make the bridge structure separable. *In reDulberg,* 289 F.2d 522, 523, 129 USPQ 348, 349 (CCPA 1961); MPEP 2144.04(V)(C).
Limitation 1(e): a connecting wall that connects one or more edges of the first wall to one or more corresponding edges of the second	See Claim 19 of Ex. A-0.

wall across the distance between the first wall and the second wall;	
Limitation 1(f): a suction connector extending from the first end of the main body portion and integral to the main body portion, the suction connector including a cavity extending longitudinally from the main body portion, the cavity in communication with the interior space of the pocket and extending from a first opening of the suction connector at the first end of the main body portion and through a length of the suction connector towards a suction port opening opposite from the main body portion; and	See Claim 19 of Ex. A-0.
Limitation 1(g): a mouth prop molded in one piece, and wherein the suction connector extends through and past the mouth prop.	See Claim 19 of Ex. A-0.
Claim 9. The mouthpiece of claim 1, wherein the suction connector comprises a cutout corresponding to a protrusion on a vacuum adapter for an interlocking fit.	Hirsch '321: FIGS. 19D, Ref. 630 Black: FIG. 3A, Ref 47 KR101082826: FIG. 3, Ref 113 CN102631180: FIG. 8 To the extent any reference is silent regarding this limitation, changes in size/proportion are obvious. *n re Rose,* 220 F.2d 459, 105 USPQ 237 (CCPA 1955); *In re Rinehart,* 531 F.2d 1048, 189 USPQ 143 (CCPA 1976); MPEP 2144.04(IV)(A)
Claim 10. The mouthpiece of claim 1, wherein the suction connector connects the interior of the pocket to a vacuum source, wherein activation of the vacuum source provides suction of fluids from the interior of the pocket toward the vacuum source.	Hirsch '321: FIG. 19A, Ref. 570 "The connection section 570 is configured to extend outside of a patient's mouth and attach to a multi-lumen tube for delivering illumination and vacuum suction to the intraoral device 200" Black: FIG. 4C, "a neck 246 defining a transverse anterior opening 247 therethrough." KR101217041: FIG. 1, Ref. 10

	KR101082826: FIGS. 2 and 3, [0027] "The insertion port (110) serves as a portion for coupling with the device body (200), with one end open and the interior hollow." KR100654392: FIG. 1, "In addition, the tube connection portion (10) is formed with a tube connecting opening (11) on one side, where a light tube (3) is connected, which operates to suck in oral substances through air suction while the optical fiber (2) is integrated." CN102631180: FIGS. 1-3, Johnson: FIG. 2, Vacuum tube 12 Zorovich 1:10-18
Claim 11. The mouthpiece of claim 1, wherein at least one of the first wall, the second wall, or the connecting wall comprise a plurality of perforations.	See Claim 19 of Ex. A-0.
Claim 12. The mouthpiece of claim 11, wherein activation of a vacuum source associated with suction connector extending from the first end of the main body portion draws fluids from an exterior of the main body portion through one or more of the plurality of perforations into the interior space of the pocket of the main body portion.	Hirsch '321: FIG. 19A, Ref. 570 "The connection section 570 is configured to extend outside of a patient's mouth and attach to a multi-lumen tube for delivering illumination and vacuum suction to the intraoral device 200" Black: FIG. 4C, "a neck 246 defining a transverse anterior opening 247 therethrough." KR101217041: FIG. 1, Ref. 10 KR101082826: FIGS. 2 and 3, [0027] "The insertion port (110) serves as a portion for coupling with the device body (200), with one end open and the interior hollow." KR100654392: FIG. 1, "In addition, the tube connection portion (10) is formed with a tube connecting opening (11) on one side, where a light tube (3) is connected, which operates to suck in oral substances through air suction while the optical fiber (2) is integrated."
Claim 13. The mouthpiece of claim 1, further comprising a cheek retractor portion connected to the	See Claim 19 of Ex. A-0.

main body portion and having a surface that applies pressure when bent, wherein the pressure is based on resilience of the cheek retractor portion.	
Claim 15. The mouthpiece of claim 1, wherein the main body portion is formed by injection-molding as one piece.	Hirsch '321: Abstract KR101082826: "[0032] The described mouse prop (100) is designed to be inserted into the oral cavity, made of synthetic materials such as clear silicone" KR100654392: FIG. 1, "The material may be synthetic resin (plastic) such as silicone or its equivalents, and is not limited to any specific material. Moreover, it is preferable to form the entire unit as a single piece" CN102631180: "The function is to thicken the glue position of the inner flow channel 7 so as not to pull the inner flow channel 7 apart when the mold of the tongue glue 14 is opened during the injection process." Johnson: "The clamp body, handles and tongue are all integrally formed, preferably by injection molding, of a strong resilient and semi-rigid plastic." To the extent any reference is silent regarding forming in one-piece, it would have been obvious to make pieces integral. *In re Larson*, 340 F.2d 965, 968, 144 USPQ 347, 349 (CCPA 1965) ; MPEP 2144.04(V)(B) Moreover, using injection molding to form plastics was within the general knowledge of a POSA.
Claim 16. The mouthpiece of claim 1, wherein a material that forms the main body portion is a flexible, translucent, high heat-resistant, autoclavable silicone-based material.	Hirsch '321: Col. 11 Ln. 19–35 Black: Claims 3–7, 33, 34 KR101217041: [0025] KR101082826: "[0032] The described mouse prop (100) is designed to be inserted into the oral cavity, made of synthetic materials such as clear silicone" & "the mouse prop can be sterilized after use" KR100654392: FIG. 1, "The material may be synthetic resin (plastic) such as silicone or its equivalents, and is

	not limited to any specific material. Moreover, it is preferable to form the entire unit as a single piece" Moreover, using flexible, translucent, high heat-resistant, autoclavable silicone-based material to form a dental mouthpiece was within the general knowledge of a POSA.
Independent Claim 18. A mouthpiece comprising:	See Claim 19 of Ex. A-0.
Limitation 18(a): a main body portion configured as a pocket at least partially enclosing an interior space that extends from a first end to a second end of the main body portion, the pocket defined by:	See Claim 19 of Ex. A-0.
Limitation 18(b): a first wall extending from the first end to the second end, the first wall having an interior surface facing the interior space of the pocket, and	See Claim 19 of Ex. A-0.
Limitation 18(c): a second wall located at a distance from to the first wall and extending from the first end to the second end, the second wall having an interior surface facing the interior surface of the first wall,	See Claim 19 of Ex. A-0.
Limitation 18(d): the second wall comprising a bridge structure that includes a plurality of protrusions integral with and protruding from the interior surface of the second wall and extending across the distance between the first wall and the second wall, wherein the bridge structure is not attached to the first wall, and wherein the plurality of protrusions of the bridge structure protrude from the interior surface of the second wall in a wave shape comprising one or more crests and one or more troughs, and	See Claim 1 of Ex. C-0.
Limitation 18(e): a connecting wall that connects one or more edges of the first wall to one or more corresponding edges of the second	See Claim 19 of Ex. A-0.

wall across the distance between the first wall and the second wall;	
Limitation 18(f): a mouth prop molded in one piece and located at the first end of the main body portion; and	Hirsch '321: FIG. 19A, bite piece 250 Black: FIG. 2, Ref. 10 KR101217041: FIG. 1, Ref. 30 KR101082826: FIGS. 2 and 3, [0029] "The tooth support section (120) is formed to extend a certain length forward from the insertion port (110), with interlocking grooves formed on the upper and lower sides, allowing the patient's upper and lower teeth to interlock," KR100654392: FIG. 1, "The bite block (30)(30a) is provided between the tongue protection portion (20) and the tube connection portion (10), allowing easy securing in the oral cavity by being bitten by the user's teeth." CN102631180: FIGS. 1, 3 and 4 Johnson: FIG. 1, Chin holder 18
Limitation 18(g): a suction connector integral with the main body portion and extending from the first end of the main body portion past the mouth prop, wherein the suction connector includes a cavity in communication with the interior space of the pocket.	See Claim 19 of Ex. A-0.

Ascentcare's Prior Art Invalidity Charts for the '970 Patent are Attached as Exhibit C-0 through C-2.

4. The '217 Patent

Many of the features of the Asserted Patents are known in the prior art, as shown by the attached claim charts, and the table below. Ascentcare reserves the right to rely on references in the table below to supplement or replace the prior art in the attached claim charts. For example,

Ascentcare reserves the right to use Hirsch or Isolite instead of Black or AirBug for the claim elements shown below:

US 11,826,217	Prior Art
Independent Claim 17. A dental mouthpiece comprising:	See Claim 19 of Ex. A-0. Nguyen '232: FIG. 1A, Abstract Hirsch 2: FIG. 2, Abstract Hirsch: FIG. 1, Abstract
Limitation 17(a): a main body portion having a first end and a second end, the main body portion comprising:	See Claim 19 of Ex. A-0. Nguyen '232: FIG. 1B Ref. 110 Hirsch 2: FIG. 4, Ref. 280 Hirsch: FIG. 19A, Ref. 280
Limitation 17(b): an anterior wall,	See Claim 19 of Ex. A-0. Nguyen '232: FIG. 1B, "An exemplary main body portion 110, when placed in a mouth, may include an anterior wall facing the front of the mouth (e.g., the side with slit 170) and a posterior wall facing the back of the mouth. The two walls may connect at a superior wall and an inferior wall forming a body that is at least partially enclosed." Hirsch 2: FIG. 4, Refs. 310, 330 Hirsch: FIG. 19A, Refs. 310, 330
Limitation 17(c): a posterior wall spaced at a distance from the anterior wall, wherein an interior space corresponding to the distance between the anterior wall and the posterior wall is defined by the anterior wall and the posterior wall,	See Claim 19 of Ex. A-0. Nguyen '232: FIG. 1B, "An exemplary main body portion 110, when placed in a mouth, may include an anterior wall facing the front of the mouth (e.g., the side with slit 170) and a posterior wall facing the back of the mouth. The two walls may connect at a superior wall and an inferior wall forming a body that is at least partially enclosed." Hirsch 2: FIG. 8, Refs. 320, 340

	Hirsch: FIG. 19A, Refs. 320, 340
Limitation 17(d): at least one connector that connects the anterior wall to the posterior wall within the interior space,	Nguyen '232: FIGS. 1B-1C, 6B, front nose of suction connector 120 Hirsch 2: FIG. 11, Ref. 365, "The flaps 310, 320, 330, 340 all extend from and share a common, central spine 365." Hirsch: FIG. 19E, Ref. 365, "The flaps 320, 330, 340, 350 all extend from and share a common, central spine 365." Other prior art teaches such a connector, e.g., Black teaches transverse walls that meet this limitation.
Limitation 17(e): at least one intervening wall protruding from and extending along an edge of the anterior wall or the posterior wall, the at least one intervening wall having a span that extends partially across the distance of the interior space, and wherein an edge of the span of the at least one intervening wall has a plurality of alternating crests and troughs that extend different distances partially across the interior space, and	Hirsch 2: FIG. 6, 9: element 414. Nguyen '232: FIG. 1D, 3:40-54. To the extent Nguyen '232 fails to teach limitation 17(d), it would have been obvious for an ordinarily skilled artisan to combine the described characteristics of one or more of the above references with those taught below. The resulting combination would satisfy the requirements of the claimed invention. As a non-limiting example, Nguyen may be combined with Black. The mouthpiece of Nguyen '232 includes enclosed sidewalls with perforations. Black teaches open sided mouthpieces and the benefits thereof. In combination, Nguyen would include cut open sidewalls that include two intervening walls with alternating crests and troughs. Nyugen '232 may also be combined with Hirsch 2 to replace the sidewalls with two partial sidewalls having channels like the channels 416. It would have also been obvious to replace the sidewalls of Nguyen '232 with a second bridge structure 180, as adding a second bridge structure would be a mere duplication of parts. *In reHarza,* 274 F.2d 669, 124 USPQ 378 (CCPA 1960); MPEP 2144.04(VI)(B).

	To the extent Hirsch fails to teach limitation 17(d), it would have been obvious for an ordinarily skilled artisan to combine the described characteristics of one or more of the above references with those taught below. The resulting combination would satisfy the requirements of the claimed invention. As a non-limiting example, Hirsch may be combined with Nguyen '232. The mouthpiece of Hirsch includes four flaps that tend to collapse under suction. Nguyen '232 teaches a bridge structure 180 that prevents collapse under suction but still allows for passage of fluid. In combination, Hirsch would include a bridge structure that includes an intervening wall with alternating crests and troughs.
Limitation 17(f): a neck extending from the second end of the main body portion, wherein a width of the neck is less than a width of the main body portion at the first end;	Nguyen '232: FIG. 1B; "rectangular portion"; 4:4-11. Hirsch 2: FIG. 4, isthmus 300 Hirsch: FIG. 19E, isthmus 300
Limitation 17(g): a suction connector portion connected to the first end of the main body portion, the suction connector portion further configured to connect the interior space to a vacuum suction source; and	See Claim 19 of Ex. A-0. Nguyen '232: FIG. 1B, Ref. 120 Hirsch 2: FIG. 1, Ref. 570 Hirsch: FIG. 18A, Ref. 570
Limitation 17(h): a cheek retractor portion connected to the neck that extends from the second end of the main body portion, wherein the width of the neck is less than a width of the cheek retractor portion.	See Claim 19 of Ex. A-0. Nguyen '232: FIG. 1B, Ref. 130 Hirsch 2: FIG. 2, Ref. 240 Hirsch: FIG. 19A, Ref. 290
Claim 18. The mouthpiece of claim 17, wherein the at least one intervening wall includes a plurality of portions of varying heights relative to a longitudinal axis of the mouthpiece.	See Claim 17.
Claim 19. The mouthpiece of claim 17, further comprising a bite block integrated to the suction connector portion, wherein the bite	Hirsch: FIG. 19A, bite piece 250 Black: FIG. 2, Ref. 10

block provides crush-resistance during biting by a patient.	KR101217041: FIG. 1, Ref. 30 KR101082826: FIGS. 2 and 3, [0029] "The tooth support section (120) is formed to extend a certain length forward from the insertion port (110), with interlocking grooves formed on the upper and lower sides, allowing the patient's upper and lower teeth to interlock," KR100654392: FIG. 1, "The bite block (30)(30a) is provided between the tongue protection portion (20) and the tube connection portion (10), allowing easy securing in the oral cavity by being bitten by the user's teeth." CN108042228: FIGS. 1 and 2, Ref. 2 CN105342717: FIGS. 1, 3, and 4 CN104490483: FIGS. 1 and 4 CN102631180: FIGS. 1, 3 and 4 Johnson: FIG. 1, Chin holder 18 Nguyen '232: FIG. 1B, Ref. 160 Hirsch 2: FIG. 2, Ref. 250 Hirsch: FIG. 19E, Ref. 250
Claim 20. The mouthpiece of claim 17, wherein the main body portion, the suction connector portion, and the cheek retractor portion are formed by injection-molding as one piece.	Hirsch '321: Abstract KR101082826: "[0032] The described mouse prop (100) is designed to be inserted into the oral cavity, made of synthetic materials such as clear silicone" KR100654392: FIG. 1, "The material may be synthetic resin (plastic) such as silicone or its equivalents, and is not limited to any specific material. Moreover, it is preferable to form the entire unit as a single piece" CN102631180: "The function is to thicken the glue position of the inner flow channel 7 so as not to pull the inner flow channel 7 apart when

	the mold of the tongue glue 14 is opened during the injection process." Johnson: "The clamp body, handles and tongue are all integrally formed, preferably by injection molding, of a strong resilient and semi-rigid plastic." Nguyen '232: Abstract Hirsch 2: "The intraoral device 200 is preferably molded out of a translucent (e.g., transparent), flexible, soft, elastic, resilient, biocompatible thermoplastic elastomer." Hirsch: "The tongue and cheek retractor 22 is preferably produced by a gas-assist injection molding process in order to produce the internal vacuum channels described below."
Claim 21. The mouthpiece of claim 17, wherein the suction connector portion comprises a cutout corresponding to a protrusion on a vacuum adapter to provide an interlocking fit.	See Claim 9 of Ex. C-0 Nguyen '232: FIG. 2C, Ref. 230 Hirsch 2: FIG. 3 Hirsch: FIG. 19E, Ref. 630
Claim 22. The mouthpiece of claim 17, where in the suction connector portion connects to the vacuum suction source, wherein activation of the vacuum suction source provides suction of fluids from the interior space of the main body portion.	Hirsch '321: FIG. 1, Abstract Black: FIG. 1, Abstract KR101217041: FIG. 1 KR101082826: FIGS. 2 and 3, Abstract KR100654392: FIG. 1, Abstract CN108042228: FIGS. 1 and 2 CN105342717: FIGS. 1, 3, and 4 CN104490483: FIGS. 1 and 4 CN102631180: FIGS. 1 and 3 Nguyen '232: FIG. 1B, Ref. 120

	Hirsch 2: FIG. 1, Ref. 570 Hirsch: FIG. 18A, Ref. 570
Claim 23. The mouthpiece of claim 22, wherein the activation of the vacuum suction source further draws fluids from an exterior of the main body portion into the interior space of the main body portion.	Hirsch '321: FIG. 1, Abstract Black: FIG. 1, Abstract KR101217041: FIG. 1 KR101082826: FIGS. 2 and 3, Abstract KR100654392: FIG. 1, Abstract CN108042228: FIGS. 1 and 2 CN105342717: FIGS. 1, 3, and 4 CN104490483: FIGS. 1 and 4 CN102631180: FIGS. 1 and 3 Johnson: FIG. 2, Abstract Nguyen '232: FIG. 1B, Ref. 120 Hirsch 2: FIG. 1, Ref. 570 Hirsch: FIG. 18A, Ref. 570

Ascentcare's Prior Art Invalidity Charts for the '217 Patent are Attached as Exhibit D-0 through D-2.

5. The '329 Patent

Many of the features of the Asserted Patents are known in the prior art, as shown by the attached claim charts, and the table below. Ascentcare reserves the right to rely on references in the table below to supplement or replace the prior art in the attached claim charts. For example, Ascentcare reserves the right to use Hirsch or Isolite instead of Black or AirBug for the claim elements shown below:

US 12,011,329	**Prior Art**

Independent Claim 1. A mouthpiece comprising:	See Claim 19 of Ex. A-0.
Limitation 1(a): a main body having a first end opposite a second end that is narrower than the first end, the main body comprising:	See Claim 19 of Ex. A-0.
Limitation 1(b): a first wall having a plurality of first edges and extending from the first end to the second end,	See Claim 19 of Ex. A-0.
Limitation 1(c): a second wall having a plurality of second edges and located at a distance from the first wall, the distance corresponding to an interior space between the first wall and the second wall, wherein the second wall also extends from the first end to the second end,	See Claim 19 of Ex. A-0.
Limitation 1(d): a connecting wall that connects one of the first edges of the first wall to one of the second edges of the second wall across the distance between the first wall and the second wall, and	See Claim 19 of Ex. A-0.
Limitation 1(e): a bridge structure that includes a plurality of spaced protrusions protruding from an interior surface of the second wall, the bridge structure extending across the distance between the first wall and the second wall through the interior space towards the first wall; and	See Claim 19 of Ex. A-0.
Limitation 1(f): a cheek-retractor portion connected to the narrower second end of the main body portion and expanding outwardly away from the second narrower end, the first wall and the second wall of the main body transitioning into and being connected in the cheek-retractor portion to form the cheek-retractor portion, wherein the first wall and the second wall of the main body portion that transition into the cheek-retractor portion are spaced apart from each other for a distance within the cheek-retractor portion before being connected at the cheek-retractor portion.	See Claim 19 of Ex. A-0.
Claim 4. The mouthpiece of claim 1, further comprising a suction connector extending from the first end of the main body, wherein an evacuation conduit within the suction connector is in communication with the	See Claim 19 of Ex. A-0.

interior space between the first wall and the second wall.	
Claim 5. The mouthpiece of claim 4, wherein a wall thickness of the suction connector is greater than a wall thickness of the first wall or the second wall of the main body.	Black, FIG. 24D Hirsch, FIG. 19D To the extent any reference is silent regarding this limitation, changes in size/proportion are obvious. *n re Rose,* 220 F.2d 459, 105 USPQ 237 (CCPA 1955); *In re Rinehart,* 531 F.2d 1048, 189 USPQ 143 (CCPA 1976); MPEP 2144.04(IV)(A)
Claim 6. The mouthpiece of claim 4, wherein the suction connector further includes a cutout configured to interlock with a corresponding protrusion of a vacuum adapter, wherein a shape of the cutout follows a shape of a shield logo.	See claim 9 of '970 chart To the extent any reference is silent regarding this limitation, changing the shape is obvious. *In reDailey,* 357 F.2d 669, 149 USPQ 47 (CCPA 1966); MPEP 2144.04(IV)(B)
Claim 7. The mouthpiece of claim 1, further comprising a stability bar corresponding to a thickened area of the main body, the stability bar extending along a longitudinal axis of the main body between the first wall and the second wall, wherein a thickness of the stability bar reinforces at least a portion of the main body.	Black: FIG. 23A, longitudinal thickener 347 Hirsch '321: FIG. 19A, Col. 11 Ln. 52–67, spine 365 KR101217041: FIG. 1 – spine KR101082826 – FIG. 2-3 – line for light. CN102631180: FIGS. 1, 3 and 4 – spine To the extent any reference fails to teach claim 7, it would have been obvious for an ordinarily skilled artisan to combine the central spine taught by any of the above or the longitudinal stiffener or Black to an isolation mouthpiece. The resulting combination would satisfy the requirements of the claimed invention.
Independent Claim 9. An isolation mouthpiece for use with a suction system in a dental procedure, the mouthpiece comprising:	See Claim 19 of Ex. A-0.
Limitation 9(a): a main body portion having a first end and a second end, the main body portion including:	See Claim 19 of Ex. A-0.
Limitation 9(b): a first wall having a first edge and a second edge extending from the	See claim 19 of '969 Chart

first end of the main body portion towards the second end of the main body portion, the first wall including a first plurality of perforations formed adjacent to and extending along a portion of the first edge and a second plurality of perforations formed adjacent to and extending along a portion of the second edge,	Black: FIG. 4C, 13 KR101082826: FIG. 2 CN102631180: FIG. 3
Limitation 9(c): a second wall having a third edge and a fourth edge extending from the first end of the main body portion towards the second end of the main body portion, the second wall including a third plurality of perforations formed adjacent to and extending along a portion of the third edge, and a fourth plurality of perforations formed adjacent to and extending along a portion of the fourth edge,	See claim 19 of '969 Chart Hirsch: FIGs. 19A, 19E Black: FIG. 4C, 13 KR101082826: FIG. 2 CN102631180: FIG. 3
Limitation 9(d): wherein the second wall further includes a plurality of protrusions extending from an interior surface of the second wall towards the first wall in a shape having one or more crests and one or more troughs, and	See Claim 19 of Ex. A-0.
Limitation 9(e): a third wall connecting the first wall and the second wall such that the first wall is spaced from the second wall to define an inner cavity, wherein a portion of the first wall has a first width adjacent to the first end of the main body portion and a second width adjacent to the second end of the main body portion, wherein a portion of the second wall has a third width adjacent to the first end of the main body portion and a fourth width adjacent to the second end of the main body portion, wherein the first width is greater than the second width, and wherein the third width is greater than the fourth width;	See Claim 19 of Ex. A-0. To the extent any reference is silent regarding this limitation, changes in size/proportion are obvious. *In re Rose,* 220 F.2d 459, 105 USPQ 237 (CCPA 1955); *In re Rinehart,* 531 F.2d 1048, 189 USPQ 143 (CCPA 1976); MPEP 2144.04(IV)(A)
Limitation 9(f): a suction connector portion extending from the first end of the main body portion, the suction connector portion including:	See Claim 19 of Ex. A-0.
Limitation 9(g): a generally tubular conduit including:	See Claim 19 of Ex. A-0.

Limitation 9(h): an opening extending through the conduit and in fluid communication with the inner cavity, the opening being configured to receive a vacuum portion of the suction system therein, and	See Claim 19 of Ex. A-0.
Limitation 9(i): a cutout configured to engage a protrusion on the suction system to aid in coupling the mouthpiece to the suction system;	See Claim 19 of Ex. A-0.
Limitation 9(j): a mouth prop including a first side and a second side that are inwardly tapered from a top surface of the mouth prop towards a bottom surface of the mouth prop, the first side and the second side each including a plurality of ridges; and	Hirsch '321: FIG. 3 "The bite block 26 includes ribs 94 and ridges 96 along opposite faces 98 of the bite block 26." Black: FIG. 21A "Moreover, each of the upper member 324 and the lower member 326 may include, on its respective outer surface, shaped regions 329, which are adapted to serve as "tooth" or "molar" guides for a more secure fit between the patient's upper and lower jaws." KR101217041: FIG. 1, Refs. 30, 31, 32 CN02631180: FIG. 3, Ref. 5
Limitation 9(k): a cheek retractor portion having a first cheek-retractor end coupled to the second end of the main body portion and a second cheek-retractor end, the first cheek-retractor end and the second cheek-retractor end each having rounded edges, wherein the first wall and the second wall of the main body portion that transition into the cheek-retractor portion are spaced apart from each other for a distance within the cheek-retractor portion before being connected to each other in the cheek-retractor portion.	See Claim 19 of Ex. A-0.
Claim 10. The mouthpiece of claim 9, wherein the cutout has a shield shape.	See claim 9 of '970 chart To the extent any reference is silent regarding this limitation, changing the shape is obvious. *In reDailey,* 357 F.2d 669, 149 USPQ 47 (CCPA 1966); MPEP 2144.04(IV)(B)
Claim 11. The mouthpiece of claim 9, wherein the cutout is generally triangular and	See claim 9 of '970 chart

has a top edge, a first curved edge, and a second curved edge.	To the extent any reference is silent regarding this limitation, changing the shape is obvious. *In reDailey,* 357 F.2d 669, 149 USPQ 47 (CCPA 1966); MPEP 2144.04(IV)(B)
Claim 12. The mouthpiece of claim 9, wherein a wall thickness of the conduit is greater than a wall thickness of the first wall or the second wall of the main body.	Black, FIG. 24D Hirsch, FIG. 19D To the extent any reference is silent regarding this limitation, changes in size/proportion are obvious. *n re Rose,* 220 F.2d 459, 105 USPQ 237 (CCPA 1955); *In re Rinehart,* 531 F.2d 1048, 189 USPQ 143 (CCPA 1976); MPEP 2144.04(IV)(A)
Claim 13. The mouthpiece of claim 9, wherein the first plurality of perforations of the first wall and the second plurality of perforations of the first wall each include at least five perforations.	See Claim 9 of '329 Chart Duplication of parts is obvious. *In reHarza,* 274 F.2d 669, 124 USPQ 378 (CCPA 1960); MPEP 2144.04(VI)(B)
Claim 14. The mouthpiece of claim 13, wherein the third plurality of perforations of the second wall and the fourth plurality of perforations of the second wall each include at least three perforations.	See Claim 9 of '329 Chart Duplication of parts is obvious. *In reHarza,* 274 F.2d 669, 124 USPQ 378 (CCPA 1960); MPEP 2144.04(VI)(B)
Independent Claim 30. An isolation mouthpiece for use with a suction system in a dental procedure, the mouthpiece comprising:	See Claim 19 of Ex. A-0.
Limitation 30(a): a main body portion having a first end and a second end, the main body portion including:	See Claim 19 of Ex. A-0.
Limitation 30(b): a first wall having a first edge and a second edge extending from the first end of the main body portion towards the second end of the main body portion, the first wall including a first plurality of perforations formed adjacent to and extending along a portion of the first edge and a second plurality of perforations formed adjacent to and extending along a portion of the second edge,	See Claim 19 of Ex. A-0.
Limitation 30(c): a second wall having a third edge and a fourth edge extending from the first end of the main body portion towards the second end of the main body portion, the second wall including a third plurality of perforations formed adjacent to and extending	See Claim 19 of Ex. A-0.

along a portion of the third edge, and a fourth plurality of perforations formed adjacent to and extending along a portion of the fourth edge,	
Limitation 30(d): wherein the second wall further includes a plurality of protrusions extending from an interior surface of the second wall towards the first wall in a shape having one or more crests and one or more troughs, and wherein the first wall and the second wall are shaped such that the first edge of the first wall corresponds to the third edge of the second wall and the second edge of the first wall corresponds to the fourth edge of the second wall, and	See Claim 19 of Ex. A-0.
Limitation 30(e): a third wall connecting the first wall and the second wall such that the first wall is spaced from the second wall to define an inner cavity, wherein a portion of the first wall has a first width adjacent to the first end of the main body portion and a second width adjacent to the second end of the main body portion, wherein a portion of the second wall has a third width adjacent to the first end of the main body portion and a fourth width adjacent to the second end of the main body portion, wherein the first width is greater than the second width, and wherein the third width is greater than the fourth width;	See Claim 19 of Ex. A-0.
Limitation 30(f): a suction connector portion extending from the first end of the main body portion, the suction connector portion including:	See Claim 19 of Ex. A-0.
Limitation 30(g): a generally tubular conduit including:	See Claim 19 of Ex. A-0.
Limitation 30(h): an opening extending through the conduit and in fluid communication with the inner cavity, the opening being configured to receive a vacuum portion of the suction system therein, and	See Claim 19 of Ex. A-0.
a cutout configured to engage a protrusion on the suction system to aid in coupling the mouthpiece to the suction system;	See Claim 9 of Ex. C-0.

Limitation 30(i): a mouth prop including a first side and a second side that are inwardly tapered from a top surface of the mouth prop towards a bottom surface of the mouth prop, the first side and the second side each including a plurality of ridges; and	See Claim 9 of E-0.
Limitation 30(j): a cheek retractor portion having a first cheek-retractor end coupled to the second end of the main body portion and a second cheek-retractor end, the first cheek-retractor end and the second cheek-retractor end each having rounded edges.	See Claim 19 of Ex. A-0.

Ascentcare's Prior Art Invalidity Charts for the '329 Patent are attached as Exhibit E-0 through E-3.

6. The '948 Patent

Many of the features of the Asserted Patents are known in the prior art, as shown by the attached claim charts, and the table below. Ascentcare reserves the right to rely on references in the table below to supplement or replace the prior art in the attached claim charts. For example, Ascentcare reserves the right to use Hirsch or Isolite instead of Black or AirBug for the claim elements shown below:

US 12,167,948	**Prior Art**
Independent Claim 20. A mouthpiece comprising:	See Claim 17 of Ex. D-0.
Limitation 20(a): a main body portion comprising:	See Claim 17 of Ex. D-0.
Limitation 20(b): a first wall that includes two edges,	See Claim 17 of Ex. D-0.
Limitation 20(c): a second wall set at a distance from the first wall, wherein the first wall and the second wall define an interior space that corresponds to the distance between the first wall and the second wall;	See Claim 17 of Ex. D-0.
Limitation 20(d): wherein the first wall is configured at the two edges to have a ridged configuration with a plurality of ridges	See Claim 17 of Ex. D-0.

extending different distances partially across the distance between the first wall and the second wall, the two edges of the first wall being unconnected to the second wall, the plurality of ridges forming an open-meshed configuration between the first and second walls to allow for suction of fluids from a patient's mouth into the interior space between the first and second walls; and	
Limitation 20(e): a suction connector portion extending from a first end of the main body portion, wherein the suction connector portion includes an evacuation conduit opening into the interior space of the main body portion; and	See Claim 17 of Ex. D-0.
Limitation 20(f): a cheek retractor portion connected to a second end of the main body portion.	See Claim 17 of Ex. D-0.
Claim 21. The mouthpiece of claim 20, wherein the cheek retractor portion is connected to a neck of the main body portion, wherein the neck extends from the second end of the main body portion.	See Claim 17 of Ex. D-0.
Claim 22. The mouthpiece of claim 21, wherein a width of the cheek retractor portion is greater than a width of the neck.	See Claim 17 of Ex. D-0.
Independent Claim 23. A mouthpiece comprising:	See Claim 17 of Ex. D-0.
Limitation 23(a): a main body portion comprising:	See Claim 17 of Ex. D-0.
Limitation 23(b): a first wall that includes two edges,	See Claim 17 of Ex. D-0.
Limitation 23(c): a second wall set at a distance from the first wall, wherein the first wall and the second wall define an interior space that corresponds to the distance between the first wall and the second wall;	See Claim 17 of Ex. D-0.
Limitation 23(d): wherein the first wall is configured at the two edges to have a ridged configuration with a plurality of ridges extending different distances partially across the distance between the first wall and the second wall, the two edges of the first wall being unconnected to the second wall, the plurality of ridges forming an open-meshed	See Claim 17 of Ex. D-0.

configuration between the first and second walls to allow for suction of fluids from a patient's mouth into the interior space between the first and second walls; and	
Limitation 23(e): a suction connector portion extending from a first end of the main body portion, wherein the suction connector portion includes an evacuation conduit opening into the interior space of the main body portion; and	See Claim 17 of Ex. D-0.
Limitation 23(f): a neck that extends from the second end of the main body portion.	See Claim 17 of Ex. D-0.
Claim 24. The mouthpiece of claim 23, wherein the main body portion further includes a plurality of perforations that open into the interior space, the plurality of perforations being located in the first wall and in the neck.	See Claim 19 of Ex. A-0. Nguyen '232: FIG. 1B, Ref. 140 Hirsch 2: FIG. 5 Hirsch '389: FIG. 19A, Ref 410
Claim 25. The mouthpiece of claim 23, further comprising a connector wall that connects the first wall to the second wall, the connector wall extending within the interior space along a longitudinal axis of the main body portion.	See Claim 17 of Ex. D-0.
Claim 26. The mouthpiece of claim 25, wherein the connector wall extends through the neck at the second end of the main body portion.	See Claim 17 of Ex. D-0.
Claim 27. The mouthpiece of claim 26, wherein the main body portion is formed of a flexible material that allows for the two edges of the first wall to be pulled away from the second wall.	Hirsch '321: Col. 11 Ln. 19–35 Black: Claims 3–7, 33, 34 KR101217041: [0025] KR101082826: "[0032] The described mouse prop (100) is designed to be inserted into the oral cavity, made of synthetic materials such as clear silicone" & "the mouse prop can be sterilized after use" KR100654392: FIG. 1, "The material may be synthetic resin (plastic) such as silicone or its equivalents, and is not limited to any specific material. Moreover, it is preferable to form the entire unit as a single piece"

	CN108042228: "The tongue plate portion 1 requires soft texture and does not cause damage to the tongue. Therefore, in some embodiments, the tongue plate portion 1 is made of medical silicone material, but from the standpoint of single use and cost saving, The tongue plate 1 can be made of plastic material." CN105342717: In series, since the barrier sheet and the fins thereon are made of an approximately transparent silicone material, the LED lamp can provide good illumination for the entire mouth after being illuminated, and the doctor has a very simple operation and a very good field of vision. Nguyen '232: Abstract Hirsch 2: "The intraoral device 200 is preferably molded out of a translucent (e.g., transparent), flexible, soft, elastic, resilient, biocompatible thermoplastic elastomer." Hirsch '389: "The tongue and cheek retractor 22 is preferably produced by a gas-assist injection molding process in order to produce the internal vacuum channels described below."
Claim 28. The mouthpiece of claim 23, wherein the main body portion is formed of a flexible material that allows for the first wall to be pulled away from the second wall.	See Claim 27.
Claim 29. The mouthpiece of claim 28, further comprising a connector wall that connects the first wall to the second wall, the connector wall extending within the interior space along a longitudinal axis of the main body portion.	See Claim 17 of Ex. D-0.
Claim 30. The mouthpiece of claim 29, wherein the connector wall extends along the longitudinal axis along a portion of the main body portion.	See Claim 17 of Ex. D-0.

Ascentcare's Prior Art Invalidity Charts for the '948 Patent are Attached as Exhibit F-0 through F-1.

7. The '418 Patent

Pursuant to this Court's Order (Dkt. No. 32), Ascentcare's Contentions regarding the '418 Patent will be served no later than August 18, 2025.

8. The '438 Patent

Ascentcare's Prior Art Invalidity Charts for the '438 Patent are Attached as Exhibit H-1.

9. The '439 Patent

Ascentcare's Prior Art Invalidity Charts for the '439 Patent are Attached as Exhibit I-1.

10. The '436 Patent

Ascentcare's Prior Art Invalidity Charts for the '436 Patent are Attached as Exhibit J-1 through J-2.

C. Solmetex Has Failed to Identify any Secondary Considerations of Nonobviousness.

Secondary considerations of nonobviousness "simply cannot overcome a strong *prima facie* case of obviousness." *Wyers v. Master Lock Co.*, 616 F. 3d 1231, 1246 (Fed. Cir. 2010) (collecting cases). Indeed, where an "invention[] represent[s] no more than the 'predictable use of prior art elements according to their established functions' . . . the secondary considerations are ***inadequate*** to establish nonobviousness as a matter of law." *Id.* (citing *KSR*, 550 U.S. at 417). Here, as discussed above, Ascentcare's patents are just predictable combinations of the prior art, and any secondary considerations are insufficient to establish nonobviousness.

To date, Solmetex has not identified any secondary considerations of nonobviousness, despite being served Interrogatory No. 5, regarding the validity of its patents. To the extent

Solmetex complies with its discovery obligations and identifies secondary considerations of nonobviousness, Ascentcare reserves the right to supplement these contentions.

VI. THE ASSERTED PATENTS ARE INVALID UNDER 35 U.S.C. § 112.

A. The Asserted Utility Patents Are Invalid Under 35 U.S.C. § 112.

35 U.S.C. § 112 at ¶ 1 states:

> The specification shall contain a written description of the invention, and of the manner and process of making and using it, in such full, clear, concise, and exact terms as to enable any person skilled in the art to which it pertains, or with which it is most nearly connected, to make and use the same, and shall set forth the best mode contemplated by the inventor of carrying out his invention.

Furthermore, 35 U.S.C. § 112 at ¶ 2 states:

> The specification shall conclude with one or more claims particularly pointing out and distinctly claiming the subject matter which the applicant regards as his invention.

That is, "a patent is invalid for indefiniteness if its claims, read in light of the specification delineating the patent, and the prosecution history, fail to inform, with reasonable certainty, those skilled in the art about the scope of the invention." *Nautilus, Inc. v. Biosig Instruments, Inc.*, 572 U.S. 898, 901 (2014). In view of the foregoing, Ascentcare contends that the following claim limitations fail to comply with Section 112 due to lack of written description, not being enabled, and/or indefiniteness and thus, render the Asserted Claims in which they are recited invalid:

Claim Limitation[5]	Patent	Patent Claim(s)	§ 112 Grounds
"configured as a pocket at least partially enclosing an interior space"	'969 '970	19 1, 18	**Indefiniteness:** The specification fails to inform a PHOSITA about the scope of what constitutes a pocket or interior space.

[5] To the extent that any identical or similar claim limitation is present in any other asserted claim or patent, any omission of those identical or similar claim limitation shall not be considered a waiver, as Solmetex is on notice that shared claim language across shared specifications are similarly deficient.

"bridge structure"	'969 '970 '686 '329	19 1, 18 12 1	**Indefiniteness:** The specification fails to inform a PHOSITA of what constitutes a "bridge structure."
"a second wall having a shape corresponding to the defined shape of the first wall"	'969	19	**Indefiniteness:** The specification fails to inform a PHOSITA about the scope of what constitutes a "corresponding" shape.
"connecting wall"	'969 '970 '329 '686	19 1, 18 1 12	**Written Description:** The specification does not convey to a PHOSITA that the inventor had possession of a "connecting wall" as described in the claims. For example, in the '686 Patent, the claim requires a "connecting wall that connects one of the first edges," but the patent specification never discloses a mouthpiece that only connects one edge. **Indefiniteness:** The specification fails to inform a PHOSITA of the scope of a "connecting wall" and where it must be on the main body portion of the mouthpiece.
"perforations"	'970 '686 '329 '948	11 15 9, 13, 14, 30 8, 9, 10, 24, 31	**Indefiniteness:** The patent specification fails to inform a PHOSITA, with reasonable specificity, the scope of its claims and what constitutes a perforation as opposed to a general opening, a slit, an aperture, or "etc.".
"flexible"	'970	16	**Indefiniteness:** The patent specification fails to inform a PHOSITA, with reasonable specificity, the scope of its claims and what constitutes whether a material is flexible.
"high-heat resistant"	'970	16	**Indefiniteness:** The patent specification fails to inform a PHOSITA, with reasonable specificity, the scope of its claims and what constitutes whether a material is high-heat resistant.

"the pressure is based on the resilience of the cheek retractor"	'970	13	**Indefiniteness:** The patent specification fails to inform a PHOSITA, with reasonable specificity, the scope of its claims and what constitutes resilience.
"interior space corresponding to the distance between the anterior wall and posterior wall is defined by the anterior wall and the posterior wall"	'217	17	**Indefiniteness**: The specification fails to inform a PHOSITA, with reasonable specificity, the scope of its claims and what constitutes an "interior space" defined by only two walls.
"intervening wall"	'217	17	**Written Description:** The specification does not convey to a PHOSITA that the inventor had possession of an "intervening wall" protruding from an anterior ***or*** posterior wall, as the specification provides at "least one anterior intervening wall extends from the anterior wall partially towards the posterior wall, and at least one posterior intervening wall extends from the posterior wall partially towards the anterior wall." **Indefiniteness**: The specification fails to inform a PHOSITA, with reasonable specificity, the scope of its claims and what constitutes an "intervening wall."
"the distance corresponding to an interior space between the first wall and the second wall"	'329	1	**Indefiniteness:** The specification fails to inform a PHOSITA, with reasonable specificity, the scope of its claims and what constitutes "interior space between the first wall and the second wall."
"inner cavity"	'329	9, 30	**Indefiniteness:** The specification fails to inform a PHOSITA, with reasonable specificity, the scope of its claims and what constitutes "inner cavity."
"shield shape"	'329	10	**Indefiniteness:** The specification fails to inform a PHOSITA, with

			reasonable specificity, the scope of its claims and what constitutes a "shield shape."
"wherein the first wall and the second wall are shaped such that the first edge of the first wall corresponds to the third edge of the second wall . . ."	'329	30	**Indefiniteness**: The specification fails to inform a PHOSITA, with reasonable specificity, the scope of its claims and what constitutes whether something is shaped such that the first edge of the first wall corresponds to the third edge of the second wall.
"open-meshed configuration"	'948	20, 23	**Indefiniteness:** The specification is silent regarding what constitutes an open-meshed configuration between the walls.
"a main body portion comprising . . .the two edges of the first wall being unconnected to the second wall"	'948	20, 23	**Written Description**: The specification fails to describe or support a main body portion where the edges of the first and second walls are unconnected. The specification both depicts and describes the opposite. As a result, the specification does not reasonably convey to a PHOSITA that the inventor had possession of a mouthpiece with those claimed elements.
"First wall is configured at the two edges to have a ridged configuration with a plurality of ridges"	'948	20, 23	**Written Description:** The specification does not describe or even mention a first wall with ridges. The first mention is in independent claims 20 and 23. The specification only depicts and describes intervening walls with such ridges. As a result, the specification does not reasonably convey to a PHOSITA that the inventor had possession of a mouthpiece with those claimed elements.
"interior space that corresponds to the distance between the first wall and the second wall"	'948	20, 23	**Indefiniteness:** The specification fails to inform a PHOSITA, with reasonable specificity, the scope of its claims and what constitutes "interior space between the first wall and the second wall."

"wave shape" / "crests" / "troughs"	'969 '970 '686 '217 '329	19 1, 18 12, 18 17 9, 30	**Indefiniteness:** The specification fails to inform a PHOSITA, with reasonable specificity, the scope of its claims and what constitutes "wave," "crests" and "troughs."
"not attached to the first wall"	'686 '970	12 1, 18	**Written Description:** The specification does not describe a mouthpiece in which the bridge structures are not attached to the first wall. As a result, the specification does not reasonably convey to a PHOSITA that the inventor had possession of a mouthpiece with those claimed elements. **Indefiniteness:** The specification fails to inform a PHOSITA, with reasonable specificity, the scope of its claims and what constitutes whether something is not attached to the first wall. For example, to the extent the second wall and first wall are connected, then the bridge structures must be attached to the first wall.
"wherein the plurality of protrusions of the bridge structure comprise a plurality of contact points"	'686	13	**Indefiniteness:** The specification fails to inform a PHOSITA, with reasonable specificity, the scope of its claims and what constitutes a "plurality of protrusions of the bridge structure comprise a plurality of contact points."
"bendable"	'686	14	**Indefiniteness:** The specification fails to inform a PHOSITA, with reasonable specificity, the scope of its claims and what constitutes "bendable."
"a plurality of spaced protrusions"	'329	1	**Written Description:** The specification does not describe any "spaced protrusions." As a result, the specification does not reasonably convey to a PHOSITA that the inventor had possession of a mouthpiece with those claimed elements.

			Indefiniteness: The specification fails to inform a PHOSITA, with reasonable specificity, the scope of its claims and what constitutes "a plurality of spaced protrusions."
"distributed along one or more of the first edges or along one or more of the second edges"	'686	15	**Indefiniteness:** The specification fails to inform a PHOSITA, with reasonable specificity, the scope of its claims and what constitutes distribution along one or more of the first edges or along one or more of the second edges.
"the first wall including a first plurality of perforations formed adjacent to and extending along a portion of the first edge and a second plurality of perforations formed adjacent to and extending along a portion of the second edge"	'329	9	**Indefiniteness:** The specification fails to inform a PHOSITA, with reasonable specificity, the scope of its claims and what constitutes perforations formed adjacent to and extending along a portion of edges.
"second wall including a third plurality of perforations formed adjacent to and extending along a portion of the third edge, and a fourth plurality of perforations formed adjacent to and extending along a portion of the fourth edge"	'329	9 30	**Indefiniteness:** The specification fails to inform a PHOSITA, with reasonable specificity, the scope of its claims and what constitutes perforations formed adjacent to and extending along a portion of edges.
"a third wall connecting the first wall and the second wall such that the first wall is spaced from	'329	9 30	**Indefiniteness:** The specification fails to inform a PHOSITA, with reasonable specificity, the scope of its claims because it has failed to

the second wall to define an inner cavity"			particularly point out and distinctly claim the invention. **Enablement**: As discussed above, the claim has omitted essential elements, and a PHOSITA would not be able to practice the claim without undue experimentation.
"having a span that extends partially across the distance of the interior space"	'217	17	**Indefiniteness:** The specification fails to inform a PHOSITA, with reasonable specificity, the scope of its claims because it has failed to particularly point out and distinctly claim the invention.
"that extend different differences partially across the interior space"	'217	17	**Indefiniteness:** The specification fails to inform a PHOSITA, with reasonable specificity, the scope of its claims because it has failed to particularly point out and distinctly claim the invention.
"wherein the at least one intervening wall includes a plurality of portions of varying heights relative to a longitudinal axis of the mouthpiece."	'217	18	**Indefiniteness:** The specification fails to inform a PHOSITA, with reasonable specificity, the scope of its claims because it has failed to particularly point out and distinctly claim the invention.
"the two edges of the first wall being unconnected to the second wall"	'948	20, 23	**Indefiniteness:** The specification fails to inform a PHOSITA, with reasonable specificity, the scope of its claims because it has failed to particularly point out and distinctly claim the invention.

B. The '438 and '439 Design Patents are Invalid as Indefinite Under 35 U.S.C. § 112.

1. The '438 and '439 Patents are Indefinite.

The '438 and '439 Patents are invalid under 35 U.S.C. § 112 because their illustrations do not accurately and unambiguously convey the appearance of the claimed designs. Design patents are required, under § 112, to enable any designer skilled in the art to create the claimed design. More specifically, 35 U.S.C. § 112 states:

> The specification shall contain a written description of the invention, and of the manner and process of making and using it, in such full, clear, concise, and exact terms as to enable any person skilled in the art to which it pertains, or with which it is most nearly connected, to make and use the same, and shall set forth the best mode contemplated by the inventor or joint inventor of carrying out the invention.

Design patents must also comply with 37 CFR § 1.152 which states, "[t]he design must be represented by a drawing that complies with the requirements of § 1.84 and must contain a sufficient number of views to constitute a complete disclosure of the appearance of the design…. [a]lternate positions of a design component, illustrated by full and broken lines in the same view are not permitted in a design drawing." Additionally, M.P.E.P. 1503.02 states:

> Every design patent application must include either a drawing or a photograph of the claimed design. As the drawing or photograph constitutes the entire visual disclosure of the claim, it is of utmost importance that the drawing or photograph be clear and complete, and that nothing regarding the design sought to be patented is left to conjecture. When inconsistencies are found among the views, the examiner should object to the drawings and request that the views be made consistent. When the inconsistencies are of such magnitude that the overall appearance of the design is unclear, the claim should be rejected under 35 U.S.C. 112(a) and (b)…as nonenabling and indefinite. (Internal citations omitted).

The illustrations found in the '438 and '439 Patents are incomplete and unclear as to the appearance of the claimed designs. Further, they include multiple, internally inconsistent drawings. Therefore, the '438 and '439 Patents are invalid under 35 U.S.C. § 112 and 37 C.F.R. 1.152. *See* M.P.E.P 1503.02; *Furrion Prop. Holding Ltd. v. Way Interglobal Network, LLC*, 2019 WL 5587147,at *7 (N.D. Ind. Oct. 30, 2019) ("The purpose of requiring definiteness 'is to ensure that the disclosure is clear enough to give potential competitors (who are skilled in the art) notice of what design is claimed – and therefore what would infringe . . . Thus, a design patent is indefinite under § 112 if one skilled in the art, viewing the design as would an ordinary observer, would not understand the scope of the design with reasonable certainty based on the claim and visual disclosure.") *(*quoting *In re Maatita,* 900F. 3d 1369, 1376 (Fed. Cir. 2018)); *In re Maatita,* 900 F. 3d 1369, 1375 (Fed. Cir. 2018). *See also Three Times Clothier, LLC v. Spanx, Inc*, 2014

WL 1688130, at *7-9 (S.D.N.Y. 2014) (inconsistencies between material elements of figures rendered design patent indefinite); *Eclectic Prods., Inc. v. Painters Prod., Inc.,* 2015 WL 930045, at *3 (D. Or. Mar. 2, 2015) (inconsistencies between visual disclosure and claim language rendered patent indefinite); *Seed Lighting Design Co. v. Home Depot*, 2005 WL 1868152, at *9 (granting summary judgment for invalidity of design patent as indefinite in case where patentee argued differences and vagaries contained within the figures were inconsequential and insubstantial).

Specifically, as shown below, Figure 4 in both patents includes an indent or ridge extending from the bite block connector to some distance below the end of the suction connector that is not disclosed in any of Figures 1-3 of either patent.

The ’438 Patent	**The ’439 Patent**
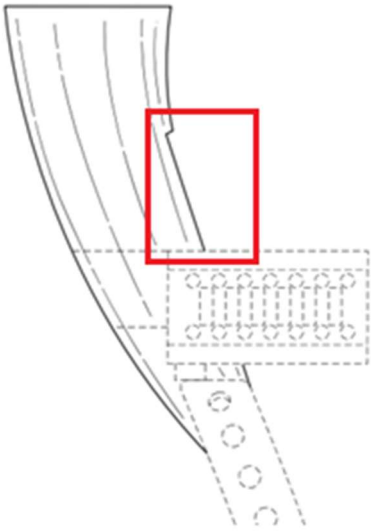 FIG. 4	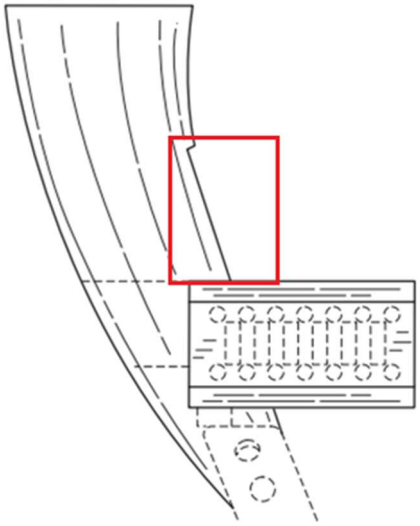 FIG. 4

This indent or ridge extending from the bite block connector to some distance below the end of the section connector is not visible in any of the other figures, even though it should be visible in Figure 3.

The ’438 Patent	The ’439 Patent
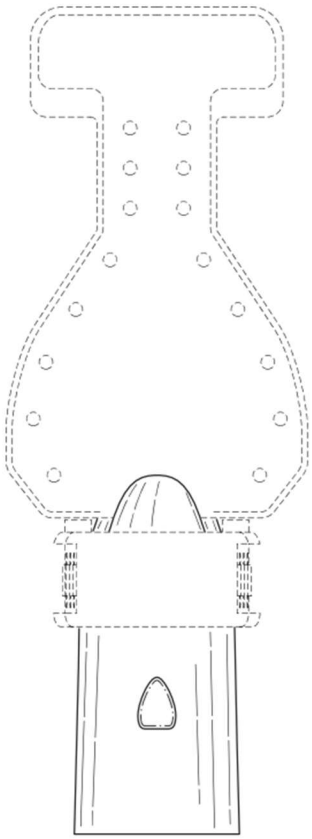 FIG. 3	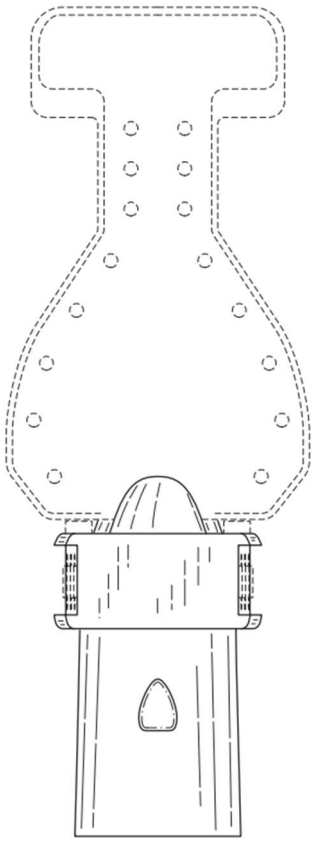 FIG. 3

Therefore, it is impossible for a DOSA to understand what is claimed and what is not.

These inconsistencies within the illustrations of the ’438 and ’439 Patents create ambiguities in the claimed designs that would leave the overall shape, style, and appearance of the designs claimed by the ’438 and ’439 Patents to conjecture for a designer of ordinary skill in the art. Therefore, because these ambiguities in the ’438 and ’439 Patents’ illustrations leave the actual appearance of the designs claimed to the conjecture of a designer of ordinary skill in the art, the ’438 and ’439 Patents are invalid under 35 U.S.C. § 112 and 37 C.F.R. 1.152.

2. The ’436 Patent is Indefinite.

As shown below, Figure 4 in the ’436 Patent, the ’436 Patent claims an ambiguous line that travels across the side profile of the unclaimed mouthpiece shape. However, that line terminates before the end of the “left side view” (according to the patent specification) profile. However, as seen in Figure 5, the line actually wraps around the back side of the mouthpiece, and so the line in Figure 4 should not terminate before the end of the side profile. In the alternative, since the line wraps around the back side of the mouthpiece, the shape, size, and orientation of the semi-circles joined by the line should not be uniform in size.

The ’436 Patent (Fig. 4)	The ’436 Patent (Fig. 5)
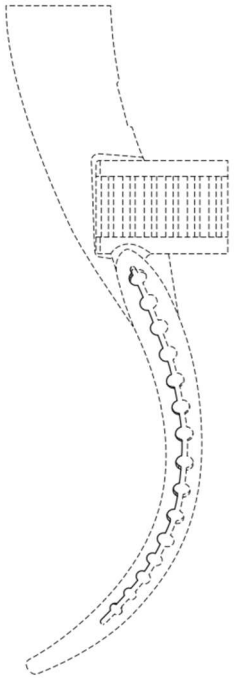 FIG. 4	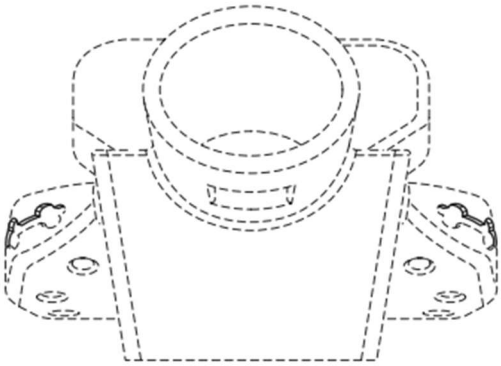 FIG. 5

These inconsistencies within the illustrations of the ’436 Patents create ambiguities in the claimed designs that would leave the overall shape, style, and appearance of the designs claimed by the ’436 Patents to conjecture for a designer of ordinary skill in the art. Therefore, because

these ambiguities in the ’436 Patent’s illustrations leave the actual appearance of the designs claimed to the conjecture of a designer of ordinary skill in the art, the ’436 Patents are invalid under 35 U.S.C. § 112 and 37 C.F.R. 1.152.

VII. THE ASSERTED DESIGN PATENTS ARE NOT ELIGIBLE FOR DESIGN PATENT PROTECTION UNDER 35 U.S.C. § 171 AS PARTIAL DESIGNS OR ARTICLES OF MANUFACTURE.

Under 35 U.S.C. § 171(a), only “designs” for “articles of manufacture” are eligible for design patent protection. The Asserted Design Patents are invalid under Section 171(a) for two separate and distinct reasons: (1) the patents do not disclose all material aspects of the design “invented,” but only portions thereof; and (2) the design claimed is not applied to an “article of manufacture” because the components upon which the claimed design has been applied are not complete in themselves.

Specifically, the ’438 Patent claims only the suction connector portion of the mouthpiece, with the remaining portions of the mouthpiece disclaimed.

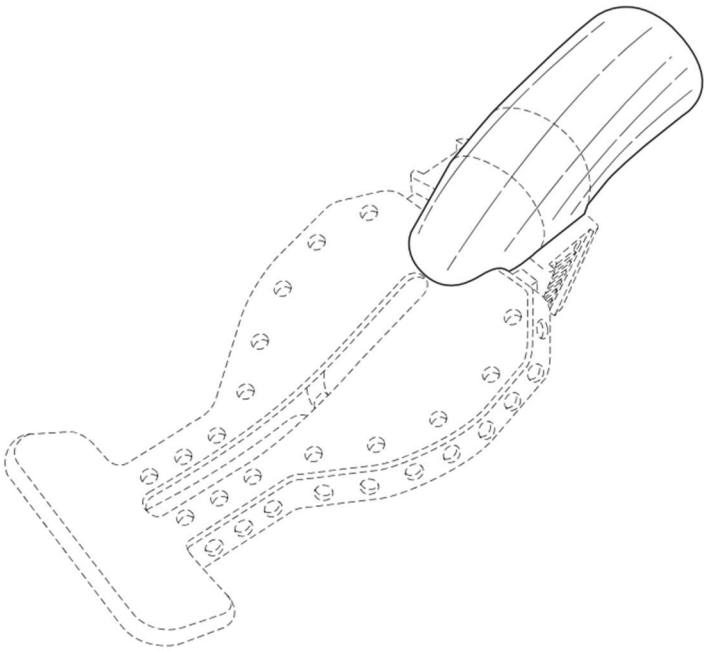

Likewise, the ’439 Patent claims the same suction connector with a bite block attached (and notably, the portion of the bite block that attaches to the suction connector is disclaimed):

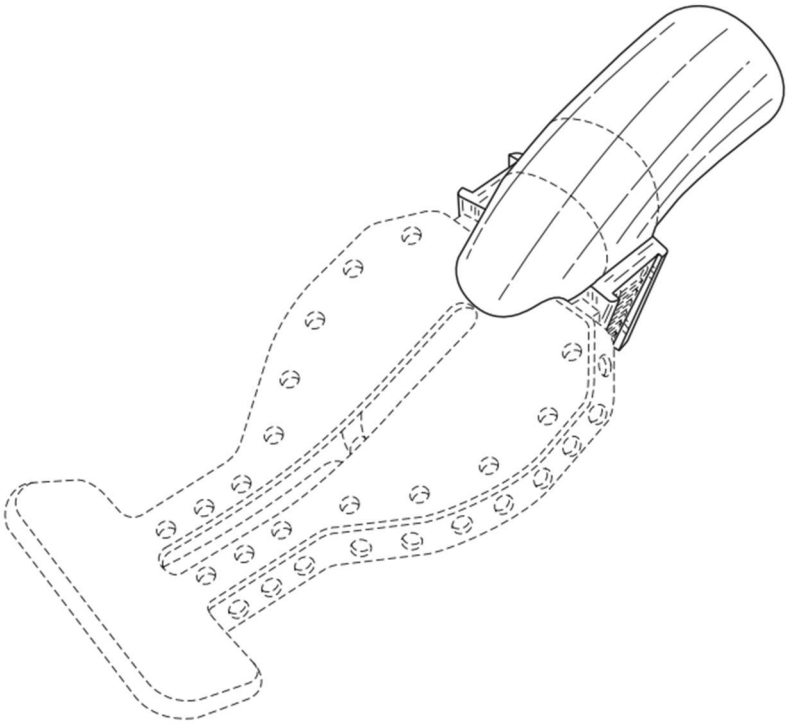

Finally, the ’436 Patent claims only a series of semicircles.

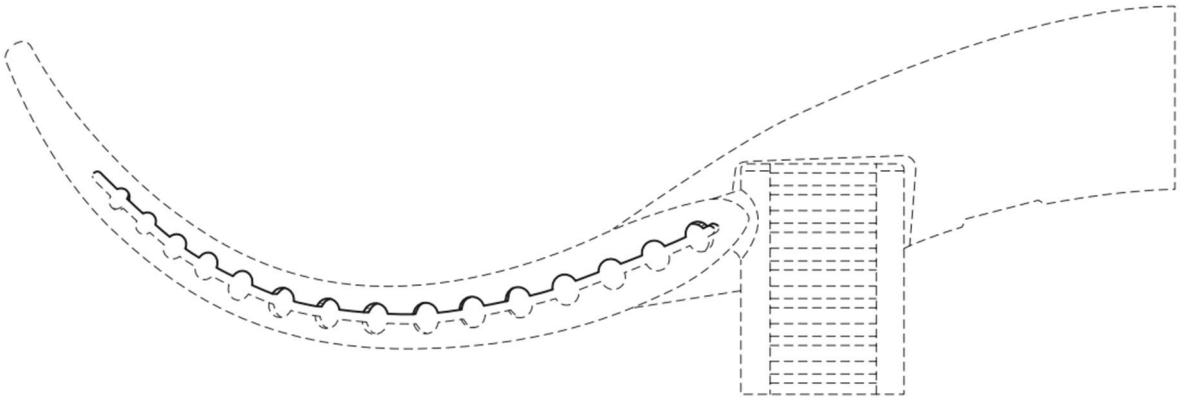

FIG.4

The designs claimed by the Asserted Patents are not patentable articles of manufacture. Early patent cases clearly illustrate that the understanding of an "article of manufacture" is a complete article in itself. For example, the Patent Office in *Ex parte Blanchard* denied an application because the "applicant admits that 'this mold board is adapted and applicable only to this single kind of plow.' It is, in other words, a mere fraction of a machine. If a material part [of the machine], it may be claimed as such, but it is not, in any proper sense, an article of manufacture." *Ex parte Blanchard*, 1870 Dec. Comm'r Pat. 59, 59. Further, a patentee in *Ex parte Northup* attempted to claim "[i]n an automobile body, the ornamental design for a forward corner," which the Board rejected as failing to represent a whole article of manufacture. *Ex parte Northup*, 24 U.S.P.Q. (BNA) ¶ 63 (Nov. 25, 1932). Cases following *Northup* maintained that understanding. *See In re Blum*, 374 F.2d 904, 907 (C.C.P.A. 1967) ("A design is a unitary thing and all of its portions are material in that they contribute to the appearance which constitutes the design.") (emphasis added).

VIII. THE ASSERTED DESIGN PATENTS ARE INVALID AS ENTIRELY FUNCTIONAL UNDER 35 U.S.C. § 171.

Ascentcare contends that all of the Asserted Design Patents are purely functional and therefore invalid. The Federal Circuit has set forth four factors to assess whether a claimed design or design element is dictated by function: (1) whether the claimed design is the best design; (2) whether the utility of the article would be adversely affected in alternative designs; (3) the existence of utility patents related to the claimed design; and (4) the existence of claimed elements or overall appearance that are clearly not functional. *PHG Technologies, LLC v. St. John. Cos.*, 469 F.3d 1361 (Fed. Cir. 2006). Here, and as discussed above, the accused, embodying, and prior

art products of dental isolation mouthpieces have similar overall elements: a main body, a cheek retractor attached to the main body portion with a neck, a bite block, and a suction connector.[6]

For just one of many examples, the ’438 Patent is directed to just the suction connector portion of dental isolation mouthpieces. But the suction connectors of dental isolation mouthguards are configured to fit flush with standard suction adaptors. Accordingly, the design of the ’438 is fully functional. *Best Lock Corp. v. Ilco Unican Corp.,* 94 F.3d 1563, 1566 (Fed. Cir. 1996) (“Clearly, different interfaces between key blades and corresponding lock keyways can be designed to permit the combination to function as a lock and key set. However, Best Lock's patent does not claim the combination of a lock and corresponding key. Instead, the claim in the '636 design patent is limited to a key blade, which must be designed as shown in the '636 patent in order to perform its intended function . . . we affirm [the] conclusion that the [] patent is invalid under 35 U.S.C. § 171 for failure to satisfy the statute’s ornamentality requirement”). The same is true of the cutouts in the suction connectors that are configured to provide a stop notch when attached to the suction adaptors. Indeed, all of Solmetex’s Asserted Utility Patents go through great lengths to define the structure and shape of the suction connector and the cutouts. Accordingly, the ’438 Patent is invalid as functional.[7]

Likewise ’439 Patent is directed to just the suction connector portion and a bite block of dental isolation mouthpieces. As discussed above, the suction connectors of dental isolation mouthguards are configured to fit flush with standard suction adaptors and are fully functional. In addition to the suction connector, the ’439 Patent also includes a bite block, which is a tapered quadrilateral shape configured to fit into a patient’s mouth. The tapered quadrilateral shape is not

---

[6] The analysis below is exemplary and Ascentcare intends to rely on expert testimony to demonstrate the full functionality of each of Solmetex’s claimed designs.

[7] Those suction adaptors typically follow an industry standard.

a design choice but instead shaped based on the hinged nature of the human jaw. Bite blocks have had the same shape for decades (see Zorovich). Accordingly, the '439 Patent is invalid as functional.

Additionally, the '436 Patent is directed to a partial[8] semi-circle pattern to evacuate fluids within a patient's mouth. But given that some form of hole is required to provide an avenue for suctioned fluids to escape, the '436 Patent is also fully functional. Further, all of Solmetex's Asserted Utility Patents go through great lengths to define the structure of these semi-circle patterns as waves, crests, and troughs on intervening walls, connecting walls, side walls, and bridge structures.

IX. CONCLUSION

Based on the foregoing, the Asserted Patents are anticipated and/or obvious in light of the prior art under 35 U.S.C. §§ 102 and 103 and/or further unpatentable under 35 U.S.C. §§ 112 and 171.

[8] Solmetex has not claimed the full design of its holes to aid in suction, but rather, a partial design in the hopes of improperly expanding the scope of its own claims to capture other products.

Dated: July 18, 2025

Respectfully submitted,

/s/ Nathan P. Sportel

Nathan P. Sportel (P87032)
D. Andrew Portinga (P55804)
Jacob L. Carlton (P84859)
45 Ottawa Avenue SW, Suite 1100
Grand Rapids, MI 49503
Telephone: (616) 831-1700
sporteln@millerjohnson.com

Jason Keener
Lisa Holubar
Daniel Zhang
Alexander Bennett
150 N. Wacker Drive,
Suite 700, Chicago, IL 60606
Telephone: (312) 667-6080
jkeener@irwinip.com

CERTIFICATE OF SERVICE

I certify that a copy of the foregoing document was served via electronic mail on July 18, 2025 upon all counsel of record.

/s/ *Jennifer Frangella*
Jennifer Frangella