Black

The mouthpiece of *Black* does not have each and every element discussed above with respect to the claimed mouthpiece. Exemplary mouthpieces disclosed by *Black* are provided below:

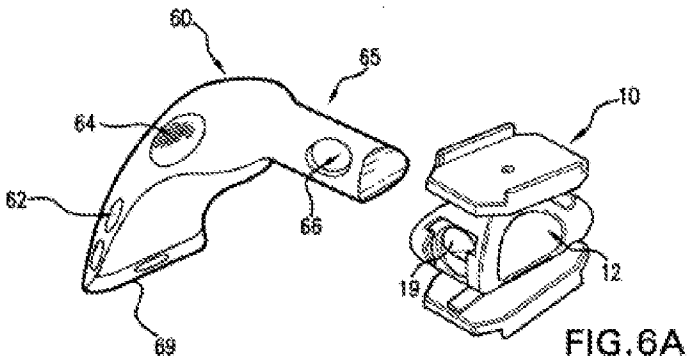

FIG.6A

The Examiner specifically refers to "tongue shield aspirator 60" as teaching the claimed 'main body.' *Office Action*, 2. The Examiner does not identify any anterior wall, any posterior wall, or side wall, however. Although the Examiner refers generally to paragraph 82 of *Black*, that paragraph refers to a different figure. And the "edges" referenced by paragraph 82 of *Black* are not disclosed as defining corresponding **shapes**, nor are there any teachings regarding a side wall that connects the edges.

On the contrary, paragraph 82 of *Black* indicates that there is no side wall. In particular, *Black* teaches that "top edge 40c of the proximal flap may be formed by the respective top edges of the posterior layer 48a and the anterior layer 48b," indicating that the edges are connected directly rather than via a distinct 'side wall,' as claimed. *Black* therefore fails to teach any 'side wall' (with perforations) that connects the anterior wall edge to the posterior wall edge.

McKelvey cannot cure *Black*'s failure to teach each any every element recited in the independent claims as *McKelvey* merely discloses a "dental saliva ejector" and wholly lacks

EX1032
Petitioner Ascentcare ('686 Patent)

any of the features discussed above (*e.g.*, 'anterior wall,' 'posterior wall,' 'side wall,' etc.). *See McKelvey*, Abstract.

"Because the hallmark of anticipation is prior invention, the prior art reference—in order to anticipate under 35 U.S.C. § 102—must not only disclose all elements of the claim within the four corners of the document, but must also disclose those elements 'arranged as in the claim.'" *Net MoneyIN, Inc. v. VeriSign, Inc.*, 545 F.3d 1359, 1370 (Fed. Cir. 2008) (citations omitted). To support a conclusion that the claim would have been obvious requires that "**all** the claimed elements were known in the prior art and that one skilled in the art could have combined the elements as claimed." MPEP 2143.02 (citing *KSR v. Teleflex*, 127 S.Ct. 1727, 1739 (2007)).

As discussed above, *Black* and *McKelvey*—individually or in combination -- fail to teach all the elements of the independent claims. Further, because each of the dependent claims incorporates by reference all the limitations of the independent claim from which it depends, the dependent claims are allowable for at least the same reasons.

Rejections Under 35 U.S.C. §102

Claims 2-14, 16, and 19-22 were rejected under 35 U.S.C. 102(b) as being anticipated by U.S. Patent Application Publication No. 2003/0134253 by Hirsch et al. ("Hirsch"). *Office Action*, 4-6. Applicants respectfully disagree. Applicants respectfully submit that *Hirsch* fails to teach at least the following limitations of the independent claims:

> a superior wall . . . wherein at least part of the superior wall **comprises a plurality of perforations** into the interior of the pocket, wherein the superior wall span **is less than a width of the anterior wall**,
>
> an inferior wall . . . wherein at least part of the inferior wall **comprises another plurality of perforations** into the interior of the pocket, and wherein the inferior wall span **is less than the width of the anterior wall**

Exemplary superior wall and inferior walls are shown in Figures 1A and 4 (provided below). The *Office Action* points to *Hirsch*'s component "54" and "any connecting material at edge 54" as purportedly teaching the claimed side wall, now amended to superior wall and additionally an inferior wall, and component "58A" as purportedly teaching the claimed plurality of perforations, shown below in Figure 10 and Figure 5. *Office Action*, 4. *Hirsch* refers to component 54 as "an upper roof portion" and to component 58A as "internal evacuation channels." *Hirsch*, [0047].

HIRSCH	APPLICANT
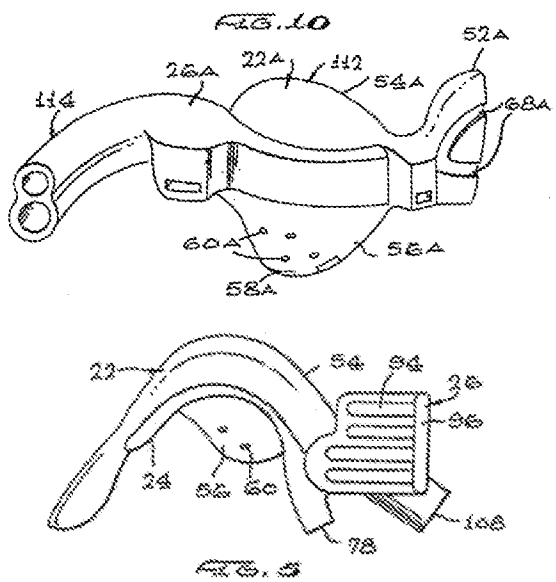	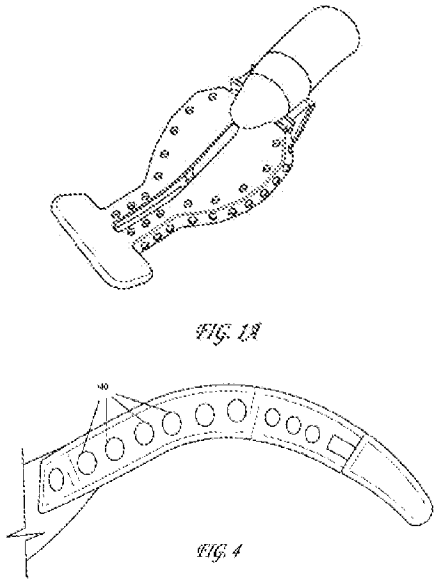

As illustrated above, component 54 is not an edge of a specific wall that is attached to another edge of another specific wall, but rather an "upper roof portion", as more clearly shown in Figure 5. Thus, *Hirsch* does not disclose a **superior wall spanning a distance between the anterior wall and the posterior wall** and that **is less than the anterior wall width**. Nor does *Hirsch* disclose an **inferior wall spanning a distance between the anterior wall and the posterior wall on a second side** and that **is less than the anterior wall width**.

Also illustrated above in *Hirsch*'s Figure 10, component 58A is not a plurality of perforations into the interior as claimed, but rather evacuation channels. Furthermore, component 58A is not located on a superior or inferior wall as described above. Rather, component 58A is located on the face of the device on the tongue retractor portion 56. *Hirsch*, [0047].

Furthermore, Figures 18A and 18B, presented below, which were discussed with the Examiner during the Examiner Interview, also do not teach the claimed features.

HIRSCH	APPLICANT
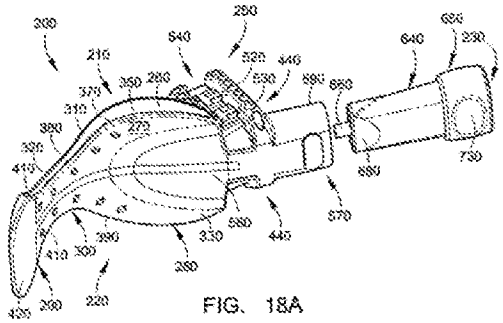 FIG. 18A 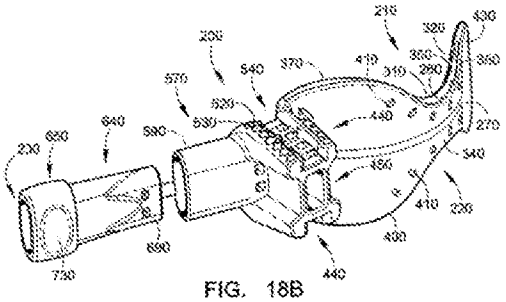 FIG. 18B	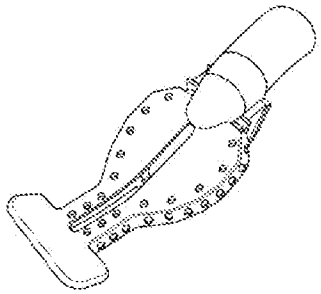 FIG. 1A 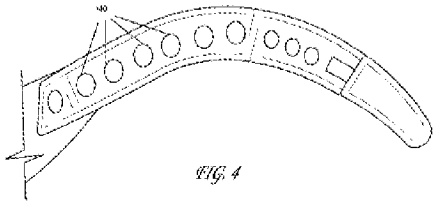 FIG. 4

As illustrated above, the evacuation holes 410 are located on the flaps 310, 320, 330, and 340. *Hirsch*, [0079]. In other words, the evacuation holes 410 are located on the face of the intraoral device 200. Nowhere does *Hirsch* teach or show a superior wall wherein at least part of the superior wall **comprises a plurality of perforations** into the interior of the pocket, wherein the superior wall span **is less than the anterior wall width**. Thus, *Hirsch* fails to disclose the claimed superior wall explicitly recited as comprising a plurality of perforations and having a superior wall span less than the anterior wall width.

Furthermore, nowhere does *Hirsch* teach or show an inferior wall wherein at least part of the inferior wall **comprises a plurality of perforations** into the interior of the pocket and that has an inferior wall span that **is less than the anterior wall width**. Thus, *Hirsch* fails to disclose the claimed inferior wall explicitly recited as comprising a plurality of perforations and having an inferior wall span less than the anterior wall width.

MPEP § 2131 states: "A claim is anticipated only if each and every element as set forth in the claim is found, either expressly or inherently described, in a single prior art reference." (*citing Verdegaal Bros. v. Union Oil Co. of California, 814 F.2d 628, 631, 2 USPQ2d 1051, 1053 (Fed. Cir. 1987)*). "Moreover, unless a reference discloses within the four corners of the document not only all of the limitations claimed but also all of the limitations arranged or combined in the same way as recited in the claim, it cannot be said to prove prior invention of the thing claimed and, thus, cannot anticipate under 35 U.S.C. § 102. *Net MoneyIn, Inc. v. VeriSign, Inc. 545 F.3d 1359 (Fed Cir. 2008)*." Applicants submit that the limitations allegedly taught by *Hirsch* are not arranged or combined in the same way as recited in the claims. Therefore, the claims are not anticipated under 35 U.S.C. § 102 by *Hirsch*.

Claim 22 discloses essentially the same claimed features as claim 21. Thus, for at least the same reasons as discussed above, withdrawal of the rejections for claim 22 is respectfully requested. Claims 2-14, 16, and 19-20 depend from independent claim 21. Thus, for at least the same reasons as discussed above, withdrawal of the rejections for claims 2-14, 16, and 19-20 are respectfully requested.

Rejections under 35 U.S.C. §103

Claim 5 was rejected under 35 U.S.C. 103(a) as being unpatentable over *Hirsch* in view of U.S. Patent No. 5,890,899 to Sclafani ("*Sclafani*"). *Office Action*, 7. Applicants respectfully disagree.

Sclafani fails to cure *Hirsch*'s failure to teach the claimed superior and inferior walls. Because claim 15 depends from independent claim 21, claim 15 is allowable for at least the same reasons as claim 21. Withdrawal of the rejection is respectfully requested.

Not all reasons for allowability and distinctions over the asserted combination of prior art references of record have been discussed, and no inference regarding such should be made.

CONCLUSION

Based on the foregoing, it is submitted that Applicants' invention as defined by the claims is patentable over the references of record. Issuance of a Notice of Allowance is solicited. Applicants' attorney welcomes the opportunity to discuss the case with the Examiner in the event that there are any questions or comments regarding the response or the application.

The Commissioner is hereby authorized to withdraw any additional fees that may be required or credit any overpayment to Deposit Account 50-1662, referencing the docket number above.

Respectfully submitted,
September 5, 2017 **POLSINELLI PC**

/Stephanie T. Vu/

Stephanie T. Vu, Reg. No. 73,063
Three Embarcadero Center, Suite 2400
San Francisco, CA 94111
Tel: (415) 248-2116
IPdocket@polsinelli.com

REMARKS

Status of the Claims

The Applicants have amended claims 8, 10, 21, and 22. Support for the amendments can be found throughout the *Specification*. No new matter has been added. As such, Claims 2-16 and 19-22 are pending.

Rejections under 35 U.S.C. §103

Claims 2-8, 11-14, 16, 19-20 and 21-22 were rejected under 35 U.S.C. 103(a) as allegedly being unpatentable over National Publication No. WO2011/014952 to Maycher et al. ("*Maycher*") in view of U.S. Publication No. 2009/0274991 to Black et al. ("*Black*"). *Office Action*, pg. 2. Applicants respectfully disagree.

Claim 21 has been amended to recite, "wherein the **interior open space of the pocket is defined** by the **defined shape of the anterior wall**, the **corresponding shape of the posterior wall**, the **superior wall** connecting the exterior edge of the anterior wall to the corresponding exterior edge of the posterior wall, and **the inferior wall connecting** the exterior edge of the anterior wall to the corresponding exterior edge of the posterior wall," and "wherein the **interior open space of the pocket extends into the rectangular portion**." The interior open space is shown below for reference:

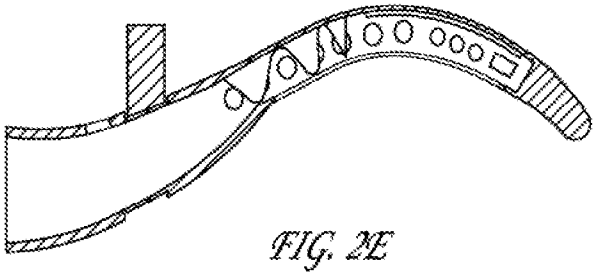

FIG. 2E

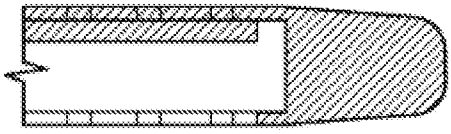

FIG. 7B

As shown above, interior open space extends to each of the anterior wall, the posterior wall, the superior wall, and the inferior wall.

Applicants submit that *Maycher* and *Black* fail to teach an interior open space defined by a defined shape of an anterior wall, a corresponding shape of a posterior wall, a superior wall connecting an exterior edge of the anterior wall to a corresponding exterior edge of the posterior wall, and an inferior wall connecting the exterior edge of the anterior wall to the corresponding exterior edge of the posterior wall. *Maycher* teaches a dental apparatus having an intraoral tip. *Maycher*, Abstract. *Maycher* further teaches the intraoral tip having a wall defining a cavity and a plurality of apertures. *Id.* at para. [0026]. Nowhere does *Maycher* teach an interior open space of a pocket **that extends into a rectangular portion**.

Indeed, the Examiner concedes that *Maycher* does not teach a rectangular portion and relies on *Black* to teach this feature. *Office Action*, pg. 3. However, *Black* does not cure the deficiencies of *Maycher*. *Black* teaches a tongue shield aspirator for fluid removal during a dental procedure. *Black*. at Abstract. *Black* teaches flaps connected by transverse walls located between each flap. *Id.* at para. [0079] - [0080]. Nowhere does *Black* teach an **interior open space defined by** a defined shape of **an anterior wall**, a corresponding shape of **a posterior wall**, **a superior wall** connecting an exterior edge of the anterior wall to a corresponding exterior edge of the posterior wall, and **an inferior wall** connecting the exterior edge of the anterior wall to the corresponding exterior edge of the posterior wall**, and an interior open space of a pocket that**

extends into a rectangular portion. As such, neither *Black* nor *Maycher* together or separately teach the feature of an interior open space defined by a defined shape of an anterior wall, a corresponding shape of a posterior wall, a superior wall connecting an exterior edge of the anterior wall to a corresponding exterior edge of the posterior wall, and an inferior wall connecting the exterior edge of the anterior wall to the corresponding exterior edge of the posterior wall, and an interior open space of a pocket that extends into a rectangular portion.

Independent claim 22 recites substantially the same amended features as independent claim 21 and is allowable for at least the same reasons as provided above.

For at least these reasons, claims 2-8, 11-14, 16, 19-20 and 21-22 are not obvious under 35 U.S.C. 103(a) by *Maycher* in view of *Black*. Thus, withdrawal of the rejection of claims 2-8, 11-14, 16, 19-20 and 21-22 is respectfully requested.

Dependent Claims 9-10

Claims 9-10 were rejected under 35 U.S.C. 103(a) as allegedly being unpatentable over Maycher in view of Black, as applied to claim 21, and further in view of U.S. Patent No. 1,471,207 to Riddle (*"Riddle"*). *Office Action*, pg. 6. Applicants respectfully disagree. Because claims 9-10 dependent from independent claim 21, claims 9-10 are allowable for at least the same reasons as claim 21. Withdrawal of the rejection is respectfully requested.

Dependent Claim 15

Claim 15 was rejected under 35 U.S.C. 103(a) as allegedly being unpatentable over Maycher in view of Black, and further in view of U.S. Patent No. 5,890,899 to Sclafani (*"Sclafani"*). *Office Action*, pg. 6. Applicants respectfully disagree. Because claim 15 depends from independent claim 21, claim 15 is allowable for at least the same reasons as claim 21. Withdrawal of the rejection is respectfully requested.

CONCLUSION

Based on the foregoing, it is submitted that Applicants' invention as defined by the claims is patentable over the references of record. Issuance of a Notice of Allowance is solicited.

Applicants are submitting this response with a petition for a one-month extension and the corresponding fee. Applicants believe no other fees or petitions are required. However, if any such petitions or fees are necessary, please consider this a request therefor and authorization to charge Deposit Account No. 50-1662 accordingly.

Applicant's undersigned representative welcomes the opportunity to discuss the case with the Examiner in the event that there are any questions or comments regarding the response or the application.

Respectfully submitted,

February 5, 2019

POLSINELLI LLP

/ Stephanie T. Vu/

Stephanie T. Vu, Reg. No. 73,063
Three Embarcadero Center, Suite 2400
San Francisco, CA 94111
Tel: (720) 931-1166
IPdocket@polsinelli.com

APPLICANT'S SUMMARY OF EXAMINER INTERVIEW

The Applicant's representative spoke with the Examiner on June 12, 2020 ("*Examiner Interview*") regarding the 35 U.S.C. 103 rejections of the *Office Action*.

During the Examiner Interview, the Applicant's representative noted that the 103 reference, *Hirsch*, fails to disclose 'a first set of perforations into the interior of the pocket' on the superior wall and 'a second set of perforations into the interior of the pocket' on the inferior wall. Further, *Hirsch* fails to disclose 'interior open space of the pocket' that spans the inferior wall to superior wall.

In particular, the claimed 'main body portion' has an 'interior open space' that is enclosed by and spans across the distance between anterior and posterior walls, as well as spanning across the superior and inferior walls. The recited 'walls' therefore enclose an interior space through which suction can be applied consistently throughout, while maintaining the structural integrity of the main body shape and enclosed interior space during suction. In contrast, *Hirsch* includes subdivisions (*e.g.*, via a spine) within its interior, as well as fails to teach any defined walls spanning across set distances as does the claimed superior and inferior walls.

The Examiner agreed with the Applicant that the current amendments overcome the current grounds for rejections. The Applicant and the Applicant's representative thank the Examiner for his time and courtesy during the *Examiner Interview*.

REMARKS

Amendments to the Claims

Claims 2-10, 12-16, and 19-22 are currently pending. Claims 21 and 22 have been currently amended. Support for the amended claims can be found in at least paragraphs [0030], [0033]-[0036], and FIG 1A of the *Specification*. The amended claims reflect subject matter to which the Applicant believes it is entitled to claim. As such, no new matter has been added.

Rejection under 35 U.S.C. § 103

Claims 2-8, 11-14, 16, and 19-22 are rejected under 35 U.S.C. § 103(a) as being unpatentable by *Maycher*(WO 2011/014952) in view of *Hirsch* (U.S. Patent Publication 2006/0063129). *Office Action*, 2. Claims 9-10 are rejected under 35 U.S.C. § 103(a) as being unpatentable over *Maycher* in view of *Hirsch*, as applied to claim 21, and further in view of *Riddle* (U.S. Patent 1,471,207). *Id.* at 6. Claim 15 is rejected under 35 U.S.C. § 103(a) as being unpatentable over *Maycher* in view of *Hirsch*, and further in view of Sclafani (U.S. Patent 5,890,899). *Id.* The Applicant respectfully disagrees and presents the following remarks.

Claim 21 has been currently amended to recite as follows (emphasis added):

- **a superior wall** connecting the exterior edge of the anterior wall across a superior wall span to the corresponding exterior edge of the posterior wall on a first side, wherein at least part of the superior wall comprises **a first set of perforations into the interior of the pocket,** and wherein the superior wall span between the anterior wall and the posterior wall **is less than a width of the anterior wall**,
- **an inferior wall** connecting the exterior edge of the anterior wall across an inferior wall span to the corresponding exterior edge of the posterior wall on a second side, wherein at least part of the inferior wall comprises **a second set of perforations into the interior of the pocket,** and wherein the inferior wall span between the anterior and the posterior wall **is less than the width of the anterior wall**, wherein a shape of **the interior open space of the pocket is enclosed by and spans across the defined shape of the anterior wall,** the corresponding shape of the posterior wall, the superior wall connecting the exterior edge of the anterior wall to the corresponding exterior edge of the posterior

wall, and the inferior wall connecting the exterior edge of the anterior wall to the corresponding exterior edge of the posterior wall,

Independent claim 22 has been similarly amended to incorporate the same language as in amended claim 21. The recited limitations find support in the *Specification*, which describes "an anterior wall facing the front of the mouth" and "a posterior wall facing the back of the mouth" connected by "a superior wall" that "rests against a roof of a patient's mouth" and "an inferior wall" that "rests against the floor of the patient's mouth." *Specification* at [0033]. These four sides of the walls connect together to form "a body that is at least partially closed." *Id.*; *see also id.* at [0047] (noting "removal of water, saliva, and debris from the at least **partially enclosed [] main body through a single, large evacuation conduit** within the suction connector portion"). The superior wall and the inferior wall include "a plurality of holes 140 distributed along the superior and inferior sides of the anterior and posterior walls," forming a "mesh along the walls of the superior and inferior edges." *Id.* at [0034].

The *Office Action* admits that *Maycher* does not disclose *inter alia* "the superior/side and inferior/side wall spans being less than a width of the anterior wall" but relies on *Hirsch* for this disclosure. *Office Action* at 3.

The "side walls 22" cited as being "less than a width of the anterior wall" in the *Office Action* refers to element 22, "cheek retractor 22" at the end of a main body and does not constitute a wall. *Id.*; *Hirsch,* at [0049], FIG. 1. Even assuming *arguendo* that element 54 in *Hirsch* which discloses "an upper roof portion" is similar to a superior wall in claim 1, FIG. 8A of *Hirsch* discloses that the element 54 comes to a point and **does not have an interior space** within. Thus, *Hirsch* fails to disclose 'a superior wall' and 'an inferior wall' which define the shape of the 'interior open space of the pocket.'

Even an alternate embodiment of *Hirsch* as seen in FIG. 18A below does not disclose 'superior' and 'inferior' walls. Elements 350 and 360 in *Hirsch* are "upper gap" and "lower gap" along the sides, which are open gaps, not connecting walls that enclose a space. *Hirsch,*

[0083]-[0084]. Thus, *Hirsch* fails to disclose 'a superior wall' which has a span 'less than a width of the anterior wall' and define the shape of 'the interior open space of the pocket' along with anterior wall, posterior wall, and inferior wall.' The specific teachings regarding "open gaps" further teach away from the claimed enclosed interior space.

HIRSCH

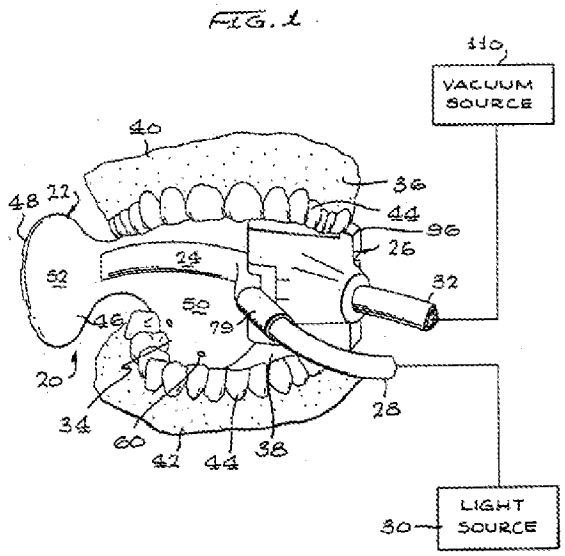

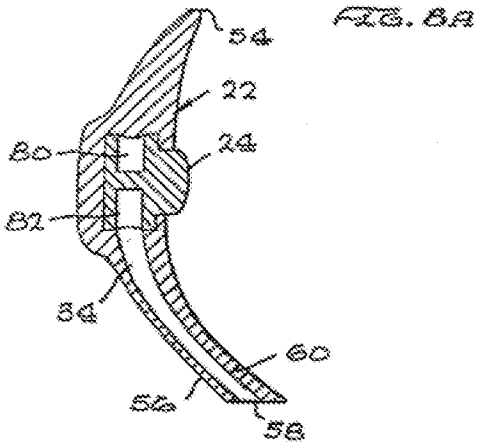

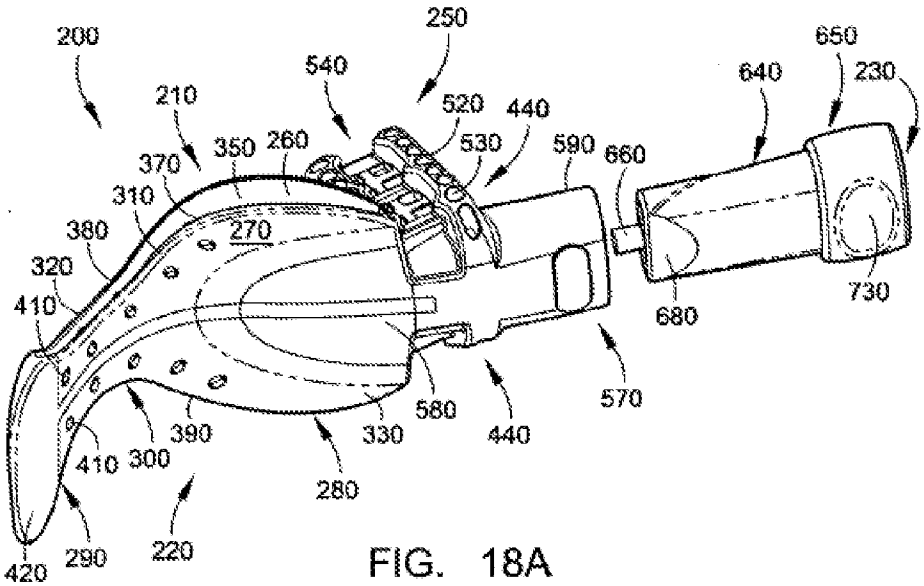

FIG. 18A

Moreover, there is no motivation to combine *Maycher* and *Hirsch*. *Maycher* discloses embodiments of the "intraoral tip 20" that are "circular," "square," "cylindrical," "rectangular, ovular, and bulbous" which describe geometric shapes regardless of the contours of the mouth. *Maycher*, [0040], FIGS. 4-9 (Figs, 4 and 9 presented below):

MAYCHER

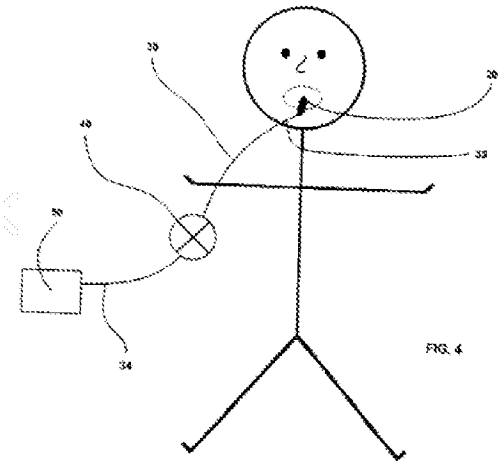

FIG. 4

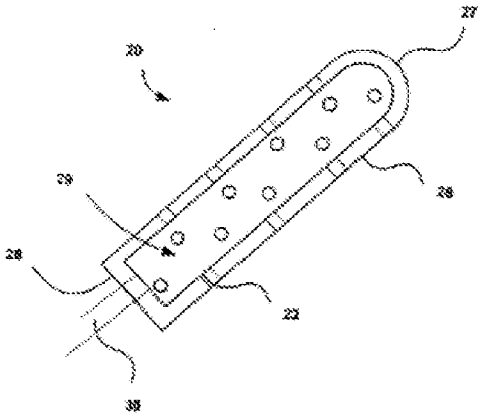

FIG. 9

Macyher's embodiments of the "intraoral tip 20" are not described in relations to any 'anterior' that refers to "facing front of the mouth" and 'posterior' that refers to "facing back of the mouth," 'superior' that refers to "the side that rests against a roof of a patient's mouth when placed therein" and 'inferior' that refers to "side that rests against the floor of the patient's mouth." *Specification* at [0033].

In contrast, *Hirsch* discloses an intraoral device that has specific parts with distinct shapes that follow the contour of a mouth of a patient. "The lower front flap 330 and lower rear flap 340" in FIG. 18A are "configured to rest or flex against the lingual area of mouth or tongue" and "the tongue and floor of the patient's mouth span the lower gap 360 and forms a seal along the lower edges 390, 400, creating a sealed lower internal evacuation channel in the lower gap 360." *Hirsch* at [0084]. Such close contact in the outer surfaces of the device with

the inside of a patient's mouth would render the "intraoral tip 20" of *Maycher* uncomfortable to use when the tip is "circular," "square," or "cylindrical," if not inoperable, because not enough space would exist between the "intraoral tip 20" and the patient's mouth to remove fluids. *Maycher* at [0040]. Moreover, as *Hirsch* fail to teach the claimed superior and inferior walls that span across the distance between the anterior and posterior wall, combining *Maycher* with *Hirsch* would not result in what is claimed.

Although the Examiner suggests that *Maycher* could be combined with *Hirsch*, there is no particular motivation for why *Maycher* would be modified in the particular manner proposed so as to teach what is claimed. There is no reason, for example, why a person of ordinary skill in the art looking to provide a "retractor as taught by *Hirsch*" would just not use the existing mouthpiece of *Hirsch* altogether.

Riddle and *Sclafani* in cited in relation to dependent claims cannot cure the deficiencies of *Hirsch* and *Maycher* with regards to the independent claims.

In view of the above remarks, the independent claims are patentable over the cited references. Furthermore, because each of the dependent claims incorporates by reference all the limitations of the independent claim from which it depends, the dependent claims are allowable for at least the same reasons. The Applicant therefore respectfully requests that the rejections of the claims under 35 U.S.C. § 103 be withdrawn.

REMARKS

Amendments to the Claims

Claims 2-10, 12-16, and 19-22 are currently pending. Claims 9, 13, and 21-23 have been currently amended. The amended claims reflect subject matter to which the Applicant believes it is entitled to claim. *See e.g., Specification*, [0035] (noting that "[a]n exemplary main body portion 110, when placed in a mouth, may include an anterior wall facing the front of the mouth (e.g., the side with slit 170) and a posterior wall facing the back of the mouth," and "[t]he two walls may connect at a superior wall and an inferior wall forming a body that is at least partially enclosed"); FIGs. 1-2. As such, <u>no new matter has been added</u>.

Rejection under 35 U.S.C. § 103

During the *Examiner Interview* on March 2, 2021, the Examiner had argued that *Baughan* (U.S. Patent 3,101,543A) teaches a first wall and a second wall comprising a bridge structure. The Applicant respectfully disagrees.

Baughan discusses "a flexible hollow rubber sleeve or, boot 24" that "surrounds and encloses each tube extension 15" as illustrated in FIG. 1 below. *Baughan*, [2:51-55]. FIG. 8 of *Baughan* further illustrates another embodiment of the same invention.

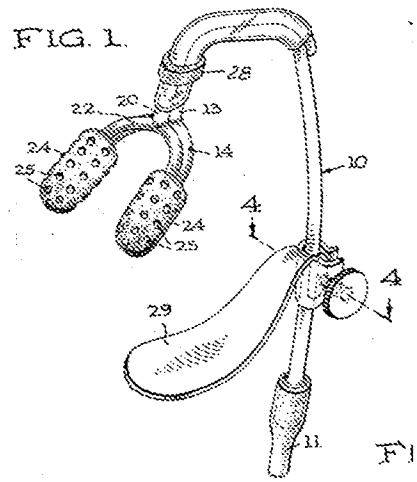

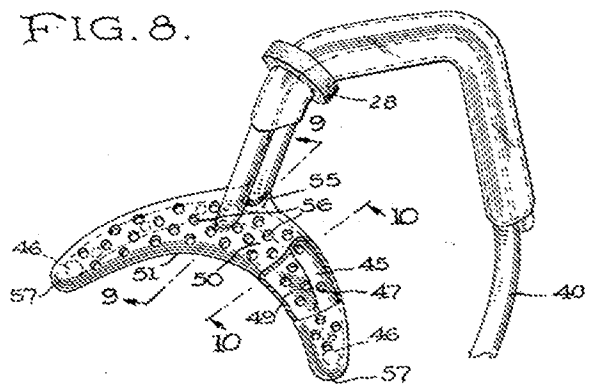

The boot 24 of *Baughan* fails to disclose 'a first wall having a shape defined by an exterior edge' and 'a second wall having a shape corresponding to the defined shape of the first wall, wherein an exterior edge of the second wall corresponds to the exterior edge of the first wall' as claimed, because the boot 24 of *Baughan* is cylindrical without any edge. FIG. 8 of *Baughan* similarly illustrates the boot as having no discernable edges.

Baughan further discusses "a substantially U-shaped horizontal branch tube 45" that is "adapted to span the floor of the mouth just inwardly of the lower gum." *Id.* at [4:43-47]. Such tube 45 illustrated in FIG. 8 of *Baughan* fails to disclose any 'wave shape comprising one or more crests and one or more troughs' as claimed. In contrast, the independent claims 21, 22, and 23 recite that 'a second wall … comprising a bridge structure that includes a plurality of protrusions integral with and protruding from an interior surface of the second wall and substantially extending a span between the first wall and the second wall, wherein the protrusion of the bridge structure protrudes from the interior surface of the second wall in a wave shape comprising one or more crests and one or more troughs.' Thus, *Baughan* fails to disclose 'a first wall having a shape defined by an exterior edge,' 'a second wall having a shape corresponding to the defined shape of the first wall, wherein an exterior edge of the second wall corresponds to the exterior edge of the first wall,' and 'the second wall comprising a bridge structure that includes a plurality of protrusions integral with and

protruding from an interior surface of the second wall and substantially extending a span between the first wall and the second wall, wherein the protrusion of the bridge structure protrudes from the interior surface of the second wall in a wave shape comprising one or more crests and one or more troughs' as claimed.

In view of the above remarks, the independent claims are patentable over the cited references in the *Office Action* dated November 27, 2020 and the *Examiner Interviews*. Furthermore, because each of the dependent claims incorporates by reference all the limitations of the independent claim from which it depends, the dependent claims are allowable for at least the same reasons. The Applicant therefore respectfully requests that the rejections of the claims under 35 U.S.C. § 103 be withdrawn.

CONCLUSION

Based on the foregoing remarks, the Applicant respectfully contends that all outstanding rejections and objections have been overcome. Accordingly, it is respectfully submitted that the present application is in condition for allowance. A Notice of Allowance is respectfully requested.

If the Examiner has any questions regarding the case, the Examiner is invited to contact the Applicant's undersigned representative.

Respectfully submitted,
Dryshield, LLC

June 17, 2021

By: /Ruby Chung/

Ruby Chung, Reg. No. 76,809
Polsinelli *LLP*
3 Embarcadero Center, Suite 2400
San Francisco, CA 94111
T: 415.248.2102
F: 415.520.0486
patentdocketing@polsinelli.com