UNITED STATES PATENT AND TRADEMARK OFFICE

BEFORE THE PATENT TRIAL AND APPEAL BOARD

ASCENTCARE DENTAL PRODUCTS, INC.
Petitioner

v.

SOLMETEX, LLC
Patent Owner

Patent No. 12,290,418
Issue Date: May 6, 2025
Title: INTRAORAL DEVICE

Inter Partes Review No. IPR2025-01175

PETITION FOR *INTER PARTES* REVIEW OF U.S. PATENT NO. 12,290,418 UNDER 35 U.S.C. §§ 311-319 AND 37 C.F.R. § 42

TABLE OF CONTENTS

I. FORMALITIES 15

A. Mandatory notices (37 C.F.R. § 42.8(a)(1)) 15

1. Real Party in Interest (37 C.F.R. § 42.8(b)(1)) 15

2. Designation of Lead and Backup Counsel (37 C.F.R. § 42.8(b)(3)) 15

3. Notice of Service 16

4. Related Proceedings 16

B. Grounds for Standing 17

C. Procedural Statements 17

II. INTRODUCTION 17

III. STATEMENT OF THE PRECISE RELIEF REQUESTED AND THE REASONS THEREFOR (37 C.F.R. § 42.22(a)) 21

IV. U.S. PATENT NO. 12,290,418 (THE ’418 PATENT) (EX1001) 23

A. Specification and Claims 23

B. Prosecution History of the ’418 Patent 26

V. A PERSON HAVING ORDINARY SKILL IN THE ART 29

VI. CLAIM CONSTRUCTION UNDER 37 C.F.R. § 42.104(b)(3) 30

VII. BACKGROUND OF DENTAL MOUTHPIECES AND THE PRIOR ART RELIED UPON IN THIS PETITION 31

A. Prior Art Patents and Printed Publications Relied Upon 32

1. Black 32

2. Park 33

3. Baughan 34

Solmetex Ex. 2029
Ascentcare Dental Products v. Solmetex - IPR2025-01059

4. Johnson 34

5. Hirsch 35

6. Zheng 36

VIII. DISCRETION UNDER § 325(d) and § 314 36

IX. GROUNDS FOR UNPATENTABILITY 37

A. Ground 1: Claims 1–9, 11–17 and 19 are obvious under 35 U.S.C. 103 in view of Black and Hirsch 37

1. Independent Claim 1 37

2. Claim 2 54

3. Claim 3 56

4. Claim 4 56

5. Claim 5 59

6. Claim 6 59

7. Claim 7 60

8. Claim 8 60

9. Claim 9 62

10. Independent Claim 11 63

11. Claim 12 64

1. Claim 13 64

1. Claim 14 64

1. Claim 15 64

1. Claim 16 64

1. Claim 17 64

1. Claim 19 64

B. Ground 2: Claims 20–22 and 24–28 are obvious under 35 U.S.C. 103 in view of Park, Baughan, and Johnson. 65

Solmetex Ex. 2029
Ascentcare Dental Products v. Solmetex - IPR2025-01059

1. Independent Claim 20 65

2. Claim 21 81

3. Claim 22 81

4. Claim 24 82

5. Claim 25 82

6. Claim 26 83

7. Claim 27 83

8. Claim 28 83

C. Ground 3: Claims 1–9, 11–17, and 23 are obvious under 35 U.S.C. 103 in view of Park, Baughan, Johnson, and Hirsch. 83

1. Independent Claim 1 83

2. Claim 2 90

3. Claim 3 91

4. Claim 4 91

5. Claim 5 94

6. Claim 6 94

7. Claim 7 94

8. Claim 8 95

9. Claim 9 98

10. Independent Claim 11 98

11. Claim 12 99

12. Claim 13 99

13. Claim 14 99

14. Claim 15 99

15. Claim 16 99

16. Claim 17 100

17. Claim 23 100

D. Ground 4: Claims 19 is obvious under 35 U.S.C. 103 in view of Park, Baughan, Johnson, and Hirsch. 100

E. Ground 5: Claims 1–9, 11–17 and 19 are obvious under 35 U.S.C. 103 in view of Black, Hirsch, and Zheng. 101

F. Grounds 6, 7, 8: Claims 20–22 and 24–28 are obvious under 35 U.S.C. 103 in view of Park, Baughan, Johnson, and Zheng. Claims 1–9, 11–17, and 20–28 are obvious under 35 U.S.C. 103 in view of Park, Baughan, Johnson, Hirsch, and Zheng. Claim 19 is obvious under 35 U.S.C. 103 in view of Park, Baughan, Johnson, Hirsch, Black, and Zheng. 102

X. CONCLUSION 103

TABLE OF AUTHORITIES

Page(s)

Cases

Phillips v. AWH Corp.,
415 F.3d 1303 (Fed. Cir. 2005) (en banc).....29

Pitney Bowes, Inc. v. Hewlett-Packard Co.,
182 F.3d 1298 (Fed. Cir. 1999).....37

Rowe v. Dror,
112 F.3d 473 (Fed. Cir. 1997).....37

Solmetex, LLC v. Ascentcare Dental Products, Inc.,
Case No. 1:24-cv-00954 (W.D. Mich).....16

Statutes

35 U.S.C. 103.....*passim*

35 U.S.C. § 102(b).....22

35 U.S.C. § 103.....21, 22, 23

35 U.S.C. § 112.....20, 29

35 U.S.C. §§ 311-319.....1, 17

35 U.S.C. § 314(a).....21

Other Authorities

37 C.F.R. § 42.....1, 17

37 C.F.R. § 42.8.....105

37 C.F.R. § 42.8(a)(1).....15

37 C.F.R. § 42.8(b)(1).....15

37 C.F.R. § 42.8(b)(3).....15

37 C.F.R. § 42.10(b).....17

37 C.F.R. § 42.22(A).....21

37 C.F.R. § 42.63(e).....17

37 C.F.R. § 42.104(B)(3) 29

37 C.F.R. § 42.106(a) 17

83 FR 51340 § 42.100(b) 29

MPEP 2111.02(II) 37, 42, 43, 44

MPEP 2143(I)(E) 52

MPEP 2144.04 49

MPEP 2144.04(IV)(A) 101

MPEP 2144.04(IV)(B) 59

MPEP 2144.04(IV)(B) 60, 62

MPEP 2144.04(IV)(B) 90, 92, 93

MPEP 2144.04(IV)(B) 94

MPEP 2144.04(IV)(B) 95, 96, 97

MPEP 2144.04(VI)(B) 55

EXHIBIT INDEX

Ex #	Exhibit
1001	U.S. Patent No. 12,290,418 ("the '418 Patent")
1002	Prosecution History of the '418 Patent
1003	Expert Declaration of Dr. Brian P. Black
1004	*Curriculum Vitae* for Dr. Brian P. Black
1005	U.S. Patent No. 8,029,280 to Black ("Black")
1006	Korean Patent No. 10-1082826 ("Park")
1007	U.S. Patent No. 3,101,543 ("Baughan")
1008	U.S. Patent No. 4,017,975 ("Johnson")
1009	RESERVED
1010	RESERVED
1011	Solmetex Infringement Contentions
1012	U.S. Patent Application No. 2003/0134253 ("Hirsch")
1013	Korean Patent No. 10-0654392
1014	U.S. Patent No. 8,911,232
1015	Prosecution History of U.S. Patent No. 8,911,232
1016	U.S. Patent No. 4,024,642
1017	U.S. Patent No. 1,731,322
1018	U.S. Patent No. 6,575,746
1019	U.S. Patent No. 9,532,858
1020	RESERVED
1021	Chinese Patent Application Publication No. 200420094338.X ("Zheng")
1022	Prosecution History Excerpt from U.S. Patent No. 11,589,969

LISTING OF CLAIMS

U.S. Patent No. 12,290,418 (Claims 1–9, 11–17, and 19–28)

Claim Designation	Claim Language
Independent Claim 1 Preamble/ Limitation 1(a)	1. An isolation mouthpiece for use with a suction system in a dental procedure, the isolation mouthpiece comprising:
Limitation 1(b)	a main body portion having a first end and a second end, the main body portion including:
Limitation 1(c)	a first wall having a first shape defined by a first edge and a second edge extending from the first end of the main body portion towards the second end of the main body portion,
Limitation 1(d)	a second wall having a second shape defined by third edge and a fourth edge extending from the first end of the main body portion towards the second end of the main body portion, the second wall including a first plurality of perforations extending along a portion of the third edge, and a second plurality of perforations extending along a portion of the fourth edge,
Limitation 1(e)	wherein a plurality of crests of a wave-like structure is formed on an interior surface of the second wall to provide contact points with the first wall, and a plurality of troughs of the wave-like structure provides gaps between adjacent ones of the plurality of crests for allowing the suctioning of fluid through the plurality of troughs;
Limitation 1(f)	and wherein the first wall and the second wall are shaped such that the first edge of the first wall corresponds in shape to the third edge of the second wall and the second edge of the first wall corresponds in shape to the fourth edge of the second wall; and wherein the first shape of the first wall corresponds to the second shape of the second wall, and
Limitation 1(g)	a third wall connecting the first wall and the second wall such that the first wall is spaced from the second wall,
Limitation 1(h)	wherein a portion of the first wall has a first width adjacent to the first end of the main body portion and a second width adjacent to the second end of the main body portion, wherein a portion of the second wall has a third width adjacent to the first

	end of the main body portion and a fourth width adjacent to the second end of the main body portion, wherein the first width is greater than the second width, and wherein the third width is greater than the fourth width;
Limitation 1(i)	a suction connector portion extending from the first end of the main body portion, the suction connector portion including: a tubular conduit including an opening extending through the conduit and in fluid communication with the plurality of troughs of the wave-like structure, the opening being configured to receive a vacuum portion of the suction system therein, the tubular conduit further including a cutout configured to engage a protrusion on the suction system to aid in coupling the isolation mouthpiece to the suction system, and
Limitation 1(j)	a mouth prop including a first side and a second side that are inwardly tapered from a top surface of the mouth prop towards a bottom surface of the mouth prop, the first side and the second side each including a plurality of ridges; and
Limitation 1(k)	a cheek retractor portion having a first cheek-retractor end coupled to the second end of the main body portion and a second cheek-retractor end, the first cheek-retractor end and the second cheek-retractor end each having rounded edges.
Claim 2	2. The isolation mouthpiece of claim 1, wherein the first plurality of perforations includes five perforations and the second plurality of perforations include five perforations.
Claim 3	3. The isolation mouthpiece of claim 2, wherein at least one of the first plurality of perforations and at least one of the second plurality of perforations are located adjacent to the second end and near the cheek retractor portion.
Claim 4	4. The isolation mouthpiece of claim 1, wherein the first wall and the second wall of the main body portion transition into and are connected in the cheek retractor portion to form the cheek retractor portion, the first wall and the second wall of the main body portion that transition into the cheek retractor portion are spaced apart from each other for a distance within the cheek retractor portion before being connected to each other in the cheek retractor portion.
Claim 5	5. The isolation mouthpiece of claim 4, wherein at least one of the first plurality of perforations and at least one of the second

	plurality of perforations are located adjacent to the second end and near the cheek retractor portion.
Claim 6	6. The isolation mouthpiece of claim 1, wherein the cutout has a shield shape.
Claim 7	7. The isolation mouthpiece of claim 1, wherein the cutout has a triangular shape.
Claim 8	8. The isolation mouthpiece of claim 1, further including a stability bar located along a center aligned with a longitudinal axis of the first wall at least adjacent to the second end of the main body, at least one of the first plurality of perforations being positioned along one edge of the second wall and at least one of the second plurality of perforations being positioned along another edge of the second wall.
Claim 9	9. The isolation mouthpiece of claim 8, wherein the stability bar extends upwardly from the second wall toward the first wall.
Independent Claim 11 Preamble/ Limitation 11(a)	11. An isolation mouthpiece for use with a suction system in a dental procedure, the isolation mouthpiece comprising:
Limitation 11(b)	a main body portion having a first end and a second end, the main body portion including:
Limitation 11(c)	a first wall having a first shape defined by first edge and a second edge extending from the first end of the main body portion towards the second end of the main body portion,
Limitation 11(d)	a second wall having a second shape defined by third edge and a fourth edge extending from the first end of the main body portion towards the second end of the main body portion, the second wall including a first plurality of perforations extending along a portion of the third edge, and a second plurality of perforations extending along a portion of the fourth edge,
Limitation 11(e)	wherein a plurality of crests of a wave-like structure is formed on an interior surface of the second wall to provide contact points with the first wall, and a plurality of troughs of the wave-like structure provides gaps between adjacent ones of the plurality of crests for allowing the suctioning of fluid through the plurality of troughs, and

Limitation 11(f)	a third wall connecting the first wall and the second wall such that the first wall is spaced from the second wall,
Limitation 11(g)	wherein a portion of the first wall has a first width adjacent to the first end of the main body portion and a second width adjacent to the second end of the main body portion, wherein a portion of the second wall has a third width adjacent to the first end of the main body portion and a fourth width adjacent to the second end of the main body portion, wherein the first width is greater than the second width, and wherein the third width is greater than the fourth width;
Limitation 11(h)	a suction connector portion extending from the first end of the main body portion, the suction connector portion including: a tubular conduit including an opening extending through the conduit and in fluid communication with the plurality of troughs of the wave-like structure, the opening being configured to receive a vacuum portion of the suction system therein, and
Limitation 11(i)	a mouth prop including a first side and a second side that are inwardly tapered from a top surface of the mouth prop towards a bottom surface of the mouth prop, the first side and the second side each including a plurality of ridges; and
Limitation 11(j)	a cheek retractor portion having a first cheek-retractor end coupled to the second end of the main body portion and a second cheek-retractor end, the first cheek-retractor end and the second cheek-retractor end each having rounded edges, wherein the first wall and the second wall of the main body portion that transition into the cheek retractor portion are spaced apart from each other for a distance within the cheek retractor portion before being connected to each other in the cheek retractor portion.
Claim 12	12. The isolation mouthpiece of claim 11, wherein the tubular conduit includes a cutout configured to engage a protrusion on the suction system to aid in coupling the isolation mouthpiece to the suction system.
Claim 13	13. The isolation mouthpiece of claim 11, wherein the first plurality of perforations includes five perforations and the second plurality of perforations include five perforations.
Claim 14	14. The isolation mouthpiece of claim 13, wherein the at least one of the first plurality of perforations and the at least one of

	the second plurality of perforations are located adjacent to the second end and near the cheek retractor portion.
Claim 15	15. The isolation mouthpiece of claim 11, wherein the first wall and the second wall are shaped such that the first edge of the first wall corresponds in shape to the third edge of the second wall and the second edge of the first wall corresponds in shape to the fourth edge of the second wall.
Claim 16	16. The isolation mouthpiece of claim 11, further including a stability bar located along a center aligned with a longitudinal axis of the first wall at least adjacent to the second end of the main body, at least one of the first plurality of perforations being positioned along one edge of the second wall and at least one of the second plurality of perforations being positioned along another edge of the second wall.
Claim 17	17. The isolation mouthpiece of claim 16, wherein the stability bar extends upwardly from the second wall toward the first wall.
Claim 19	19. The isolation mouthpiece of claim 11, wherein a wall thickness within the suction connector portion is greater than a wall thickness of the first wall or the second wall of the main body.
Independent Claim 20 Preamble/ Limitation 20(a)	20. A mouthpiece comprising:
Limitation 20(b)	a main body having a first end opposite a second end that is narrower than the first end, the main body comprising:
Limitation 20(c)	a first wall that extends from the first end to the second end, wherein the first wall includes a plurality of first edges,
Limitation 20(d)	a second wall that extends from the first end to the second end, wherein the first wall and the second wall define an interior space therebetween, and wherein the second wall includes a plurality of second edges,
Limitation 20(e)	wherein a plurality of crests is formed on an interior surface of the second wall to provide a plurality of contact points with the first wall, and wherein a plurality of troughs provide a plurality of gaps through which fluids can pass between the contact

	points, wherein the contact points are not attached to the first wall; and
Limitation 20(f)	a third wall that connects one of the first edges of the first wall to one of the second edges of the second wall; and
Limitation 20(g)	a cheek retractor portion extending from the second end and connected to the first wall and the second wall of the main body.
Claim 21	21. The mouthpiece of claim 20, further comprising a suction connector extending from the first end of the main body, wherein an evacuation conduit within the suction connector is in communication with the interior space between the first wall and the second wall.
Claim 22	22. The mouthpiece of claim 21, wherein the suction connector further includes a cutout configured to interlock with a corresponding protrusion of a vacuum adapter.
Claim 23	23. The mouthpiece of claim 20, further comprising a stability bar corresponding to a thickened area of the main body, the stability bar extending along a longitudinal axis of the main body between the first wall and the second wall, wherein a thickness of the stability bar reinforces at least a portion of the main body.
Claim 24	24. The mouthpiece of claim 20, wherein a material used to form the main body is a flexible, translucent, high heat-resistant, autoclavable silicone-based material.
Claim 25	25. The mouthpiece of claim 20, further comprising a mouth prop injection-molded in one piece.
Claim 26	26. The mouthpiece of claim 25, wherein the mouth prop is connected to a suction connector.
Claim 27	27. The mouthpiece of claim 26, wherein at least one of the cheek retractor and the suction connector is integral with the main body.
Claim 28	28. The mouthpiece of claim 20, wherein the plurality of perforations are distributed along one or more of the second edges of the second wall.

I. FORMALITIES

A. Mandatory notices (37 C.F.R. § 42.8(a)(1))

1. Real Party in Interest (37 C.F.R. § 42.8(b)(1))

Petitioner Ascentcare Dental Products, Inc. ("Ascentcare") is the real party-in-interest in this petition. Ascentcare is the defendant in the related proceeding identified in Section 1(A)(4).

2. Designation of Lead and Backup Counsel (37 C.F.R. § 42.8(b)(3))

Lead Counsel	First Backup Counsel
Nathan Sportel Reg. No. 67,980 Miller Johnson 45 Ottawa Ave. SW, Suite 1100 Grand Rapids, MI 49503 (616) 831-1793 Tel (616) 831-1701 Fax sporteln@millerjohnson.com	Brandon Griffith Reg. No. 74,934 Miller Johnson 500 Woodward Ave., Suite 2800 Detroit, MI 49503 (313) 672-6932 Tel (313) 672-6951 Fax griffithb@millerjohnson.com
	Backup Counsel
	Jacob Cowdrey Reg. No. 81,803 Miller Johnson 45 Ottawa Ave. SW, Suite 1100 Grand Rapids, MI 49503 (616) 831-1864 Tel (616) 831-1701 Fax cowdreyj@millerjohnson.com

3. Notice of Service

Please direct all correspondence to lead counsel at the above address. Petitioner also consents to email service at the above email addresses for lead and back-up counsel.

4. Related Proceedings

U.S. Patent No. 12,290,418 is not presently asserted in *Solmetex, LLC v. Ascentcare Dental Products, Inc.*, Case No. 1:24-cv-00954 (W.D. Mich), and Patent Owner has not served Petitioner with a Complaint asserting the ’418 Patent as of the time of filing this petition. However, Patent Owner has sought leave to amend the Complaint to assert the ’418 Patent, so the ’418 Patent may be asserted in a complaint shortly after filing the petition. Thus, Section 315(b) does not currently apply to this petition. Ascentcare has not filed a separate civil action challenging the validity of the ’418 Patent.

Petitioner also filed an *inter partes* review petition on five related patents (U.S. 11,589,969, 11,589,970, 11,744,686, 11,826,217, 12,011,329) also asserted in *Solmetex, LLC v. Ascentcare Dental Products, Inc.*, Case No. 1:24-cv-00954. Petitioner further filed a post-grant review petition on a related patent (U.S. 12,167,948) also asserted in *Solmetex, LLC v. Ascentcare Dental Products, Inc.*, Case No. 1:24-cv-00954. The proceeding numbers are IPR2025-01020, IPR2025-01057, IPR2025-01059, IPR2025-01065, IPR2025-01104, and PGR2025-00058.

B. **Grounds for Standing**

While the ’418 Patent issued just over one month ago, the ’418 Patent is eligible for *inter partes* review under 37 C.F.R. § 102(a)(2) because the ’418 Patent claims priority to December 7, 2012, and is therefore not a “first to file” or “AIA” patent under Section 3(n)(1) of the Leahy-Smith American Invents Act. Thus, Petitioner hereby certifies the ’418 Patent is available for *inter partes* review, and Petitioner is not barred from requesting an *inter partes* review challenging the patent claims on the Grounds identified in the petition.

C. **Procedural Statements**

This Petition is filed in accordance with 37 C.F.R. § 42.106(a). A Power of Attorney (37 C.F.R. § 42.10(b)) and Exhibit List (37 C.F.R. § 42.63(e)) are filed concurrently with this Petition. The fee is being paid via Deposit Acct. No. 50-0223. The United States Patent and Trademark Office is authorized to charge any fee deficiencies, or credit any overpayment, to Deposit Acct. No. 50-0223.

II. **INTRODUCTION**

Pursuant to 35 U.S.C. §§ 311-319 and 37 C.F.R. § 42, the undersigned, on behalf of and representing Ascentcare, petitions for *inter partes* review of claims 1–9, 11–17, and 19–28 of U.S. Patent No. 12,290,418, entitled “Intraoral Device” (the “’418 Patent”), issued to Thien Nguyen and assigned to Solmetex, LLC (“Solmetex”). EX1001.

The ’418 Patent discloses an enclosed dental mouthpiece with sidewalls. EX1001, FIG. 1A, 2:4-6; EX1003, ¶¶ 2, 26-34. The mouthpiece depicted and described by the ’418 Patent follows the same general shape of prior art isolation mouthpieces known for decades. *See* EX1005, FIG. 4C; EX1006, FIG. 3; EX1012, FIG. 19A; EX1013, FIG. 1; EX1016, FIG. 1.

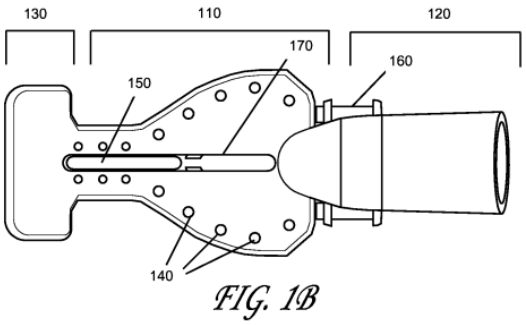

FIG. 1B

’418 Patent

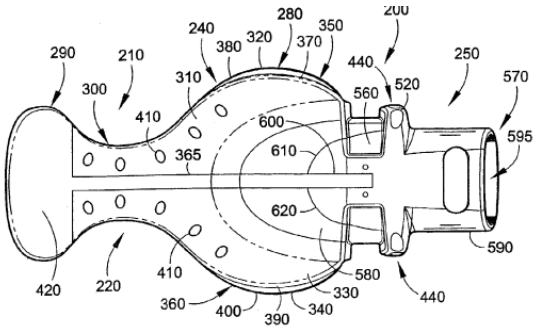

FIG. 19A

Hirsch

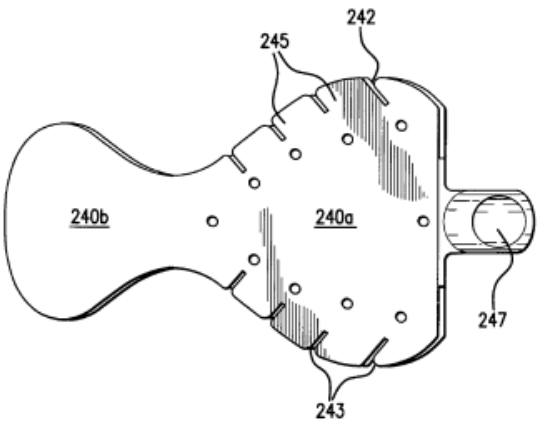

Black

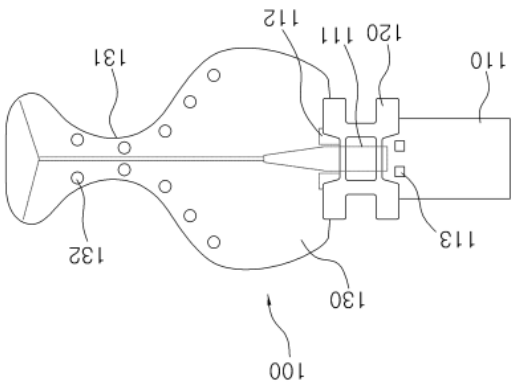

Park

Originally, Patent Owner was content claiming a dental mouthpiece with enclosing sidewalls, as clearly shown in FIG. 1A (and all other figures in the specification). EX1014, claim 1.

The '418 Patent is no longer limited to claims having "sidewalls." Rather, they recite a "third wall," which, according to Patent Owner, can be any structure that connects anterior and posterior walls. EX1011, p. 7. Notably, almost all prior art dental isolation mouthpieces disclose a connecting wall that satisfies Patent Owner's new interpretation of the '418 Patent's claim language. EX1005, FIGs. 1, 4C, 13; EX1012, FIG. 18B; EX1013, FIG. 1.

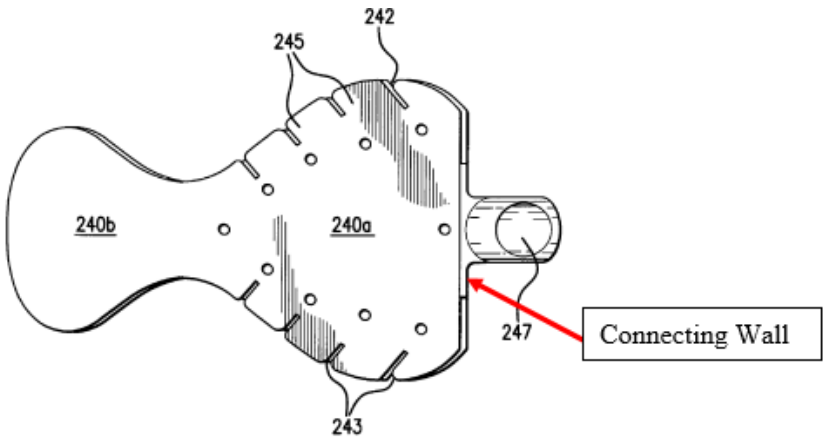

FIG.4C

Black

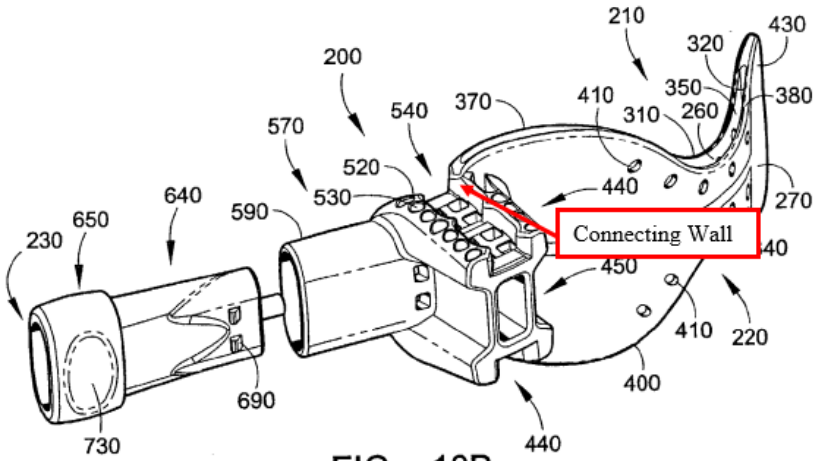

FIG. 18B

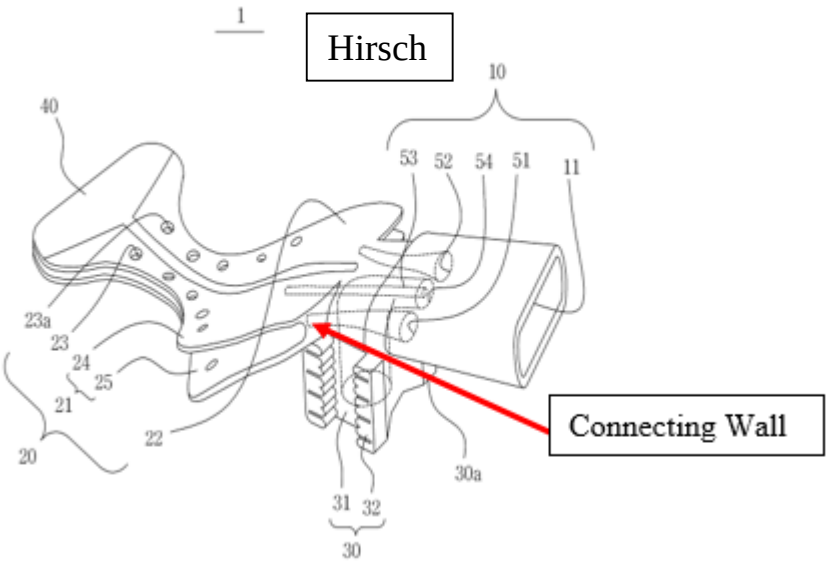

Understandably, in view of Patent Owner's very specific and nuanced arguments illustrating the importance of enclosing sidewalls in a previously-filed application overseen by the same Examiner, the Examiner does not appear to have appreciated the impact of Patent Owner's broadening effort. EX1022. In omitting sidewalls, Patent Owner completely disregarded the prosecution history of the parent application and statements it previously made to the Examiner.

Moreover, the ’418 Patent was filed as a Track One Application, and the Examiner did not issue a single prior art rejection during prosecution (only 35 U.S.C. § 112 rejections).

These attempts to broaden claim scope resulted in the Examiner allowing claims that recaptured claim scope that Patent Owner willingly surrendered in view of the prior art during prosecution. Therefore, the claims of the ’418 Patent are invalid for overbreadth.

A petition for *inter partes* review must demonstrate “a reasonable likelihood that the petitioner would prevail with respect to at least one of the claims challenged in the petition.” 35 U.S.C. § 314(a). The Petition meets this threshold.

III. STATEMENT OF THE PRECISE RELIEF REQUESTED AND THE REASONS THEREFOR (37 C.F.R. § 42.22(A))

Petitioner respectfully requests a final written decision that claims 1–9, 11–17, and 19–28 of the ’418 Patent are unpatentable in light of 35 U.S.C. § 103. Claims 1, 11, and 20 are independent.

Petitioner requests *inter partes* review of the ’418 Patent based on the following references, all of which were filed, issued, or published prior to the earliest priority date of the ’418 Patent, which is Dec. 7, 2012[1]. The prior art relevant to this Petition includes: U.S. Patent No. 8,029,280 to Black (“Black”), filed on Sept. 26,

[1] Petitioner does not concede that all claim limitations are entitled to this priority date because the provisional application does not support all claim limitations.

2008 and issued on October 4, 2011; Korean Patent No. KR10-1082826 to Park ("Park"), filed on January 20, 2010, and issued on November 11, 2011; U.S. Patent No. 3,101,543 to Baughan ("Baughan"), filed on May 15, 1961 and issued on August 27, 1963; U.S. Patent No. 4,017,975 to Johnson ("Johnson") filed on March 22, 1976 and issued on April 19, 1977; U.S. Patent Application Publication No. 2003/0134253 to Hirsch ("Hirsch"), filed on February 27, 2003 and published on July 17, 2003; and Chinese Patent Application No. 200420094338.X to Zheng ("Zheng"), filed on October 25, 2004 and published on December 28, 2005. Black, Park, Baughan, Johnson, Hirsch, and Zheng are all prior art under 35 U.S.C. § 102(b).

This Petition further relies upon the Declaration of Dr. Brian Black ("Black Decl." (EX1003); Black CV (EX1004)), which is relevant to the skill, knowledge, and expertise of a person having ordinary skill in the art ("PHOSITA") at the time of the invention and how that person would have understood and applied the prior art. The statutory grounds on which the challenge is based on:

(1) Claims 1–9, 11–17, and 19 are obvious under 35 U.S.C. § 103 in view of Black and Hirsch.

(2) Claims 20–22 and 24–28 are obvious under 35 U.S.C. § 103 in view of Park, Baughan, and Johnson.

(3) Claims 1–9, 11–17, and 23 are obvious under 35 U.S.C. § 103 in view of Park, Baughan, Johnson, and Hirsch.

(4) Claim 19 is obvious under 35 U.S.C. § 103 in view of Park, Baughan, Johnson, Hirsch, and Black.

(5) Claims 4, 11–17, and 19 are obvious under 35 U.S.C. § 103 in view of Black, Hirsch, and Zheng.

(6) Claims 4 and 11–17 are obvious under 35 U.S.C. § 103 in view of Park, Baughan, Johnson, Hirsch, and Zheng.

(7) Claim 19 is obvious under 35 U.S.C. § 103 in view of Park, Baughan, Johnson, Hirsch, Black, and Zheng.

IV. **U.S. PATENT NO. 12,290,418 (THE ’418 PATENT) (EX1001)**

A. **Specification and Claims**

The ’418 Patent describes a dental isolation mouthpiece with the same basic structure of conventional isolation mouthpieces. *E.g.* EX1005, FIG. 4C; EX1012, FIG. 19A; EX1013, FIG. 1; EX1006, FIG. 2; EX1016, FIG. 1.

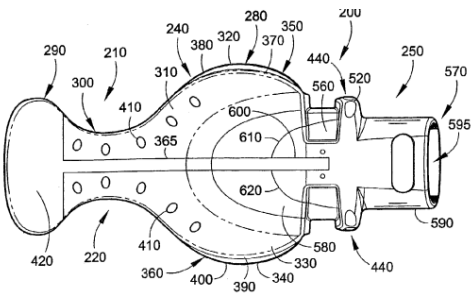

FIG. 19A

’418 Patent

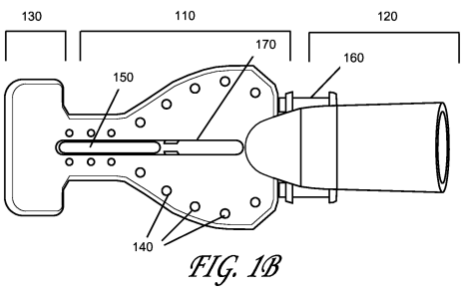

FIG. 1B

Hirsch

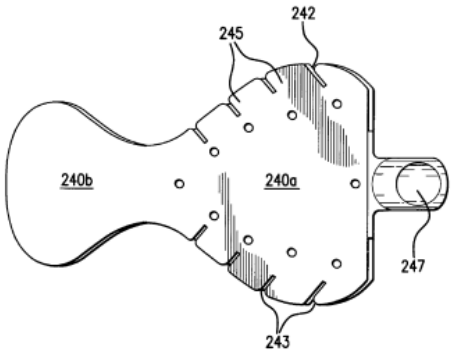

Black

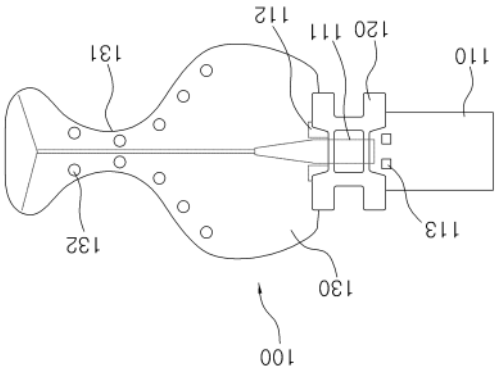

Park

A mouthpiece having a suction connector, a bite block, a wider tongue retractor, a narrow isthmus, and a cheek retractor was well-established before the ’418 Patent’s priority date. *Id.*

Exactly like the prior art, the ’418 Patent discloses a dental mouthpiece that attaches to a suction adapter and assists in removing fluids and debris from a patient's oral cavity during dental procedures. EX1001, Abstract. The mouthpiece has a main body portion 110, a cheek retractor portion 130, and a suction connector portion 120. EX1001, 3:32-34.

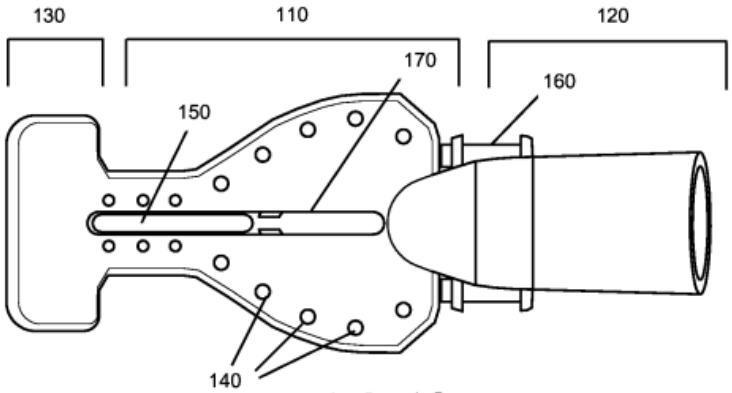

FIG. 1B

The main body portion is configured as a "pocket" with perforations 140 that communicate with an interior space within the pocket. EX1001, 4:17-28. The pocket is formed by an anterior wall, a posterior wall, and superior and inferior sidewalls, each connected to both the anterior and posterior walls, thereby enclosing the pocket. EX1001, 3:53-4:4. The posterior wall includes a bridge structure having spaced-apart protrusions. EX1001, 4:55-5:7.

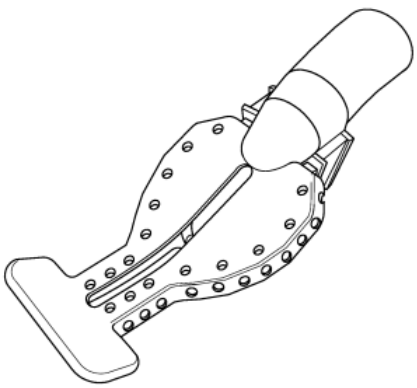

FIG. 1A

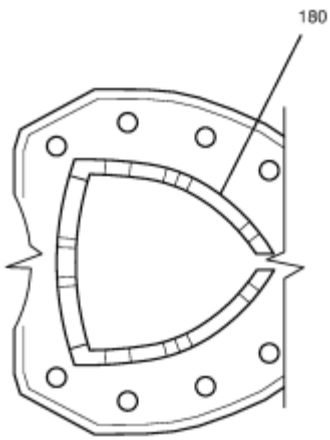

FIG. 5

The bridge structure keeps the anterior and posterior walls separated during suction and allows fluids to pass between the protrusions. *Id.*

The ’418 Patent further describes a cheek retractor, and FIG. 7A and 7B show some features that one independent claim and one dependent claim attempt to describe. EX1001, 4:21-23, 5:22-27.

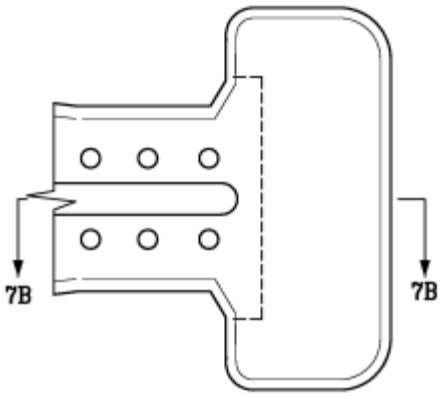

FIG. 7A

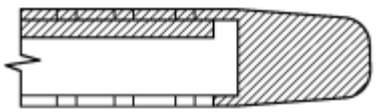

FIG. 7B

B. **Prosecution History of the ’418 Patent**

The ’418 Patent was filed on September 4, 2024 and is a continuation application to U.S. Patent Application No. 18/679,097, which is a continuation to U.S. Patent Application No. 18/217,304, which is a continuation to U.S. Patent No. 11,744,686, which is a continuation to U.S. Patent No. 8,911,232. EX1001, (22), (63). The ’418 Patent claims a priority date of December 7, 2012, which was the filing date of a provisional application. EX1001, (63).

U.S. 8,911,232 ("the '232 Patent") includes claims reciting a dental mouthpiece having a pocket defined by an anterior wall, a posterior wall, and a sidewall. EX1014; claim 1. Notably, originally-presented claims of the application that resulted in the '232 Patent recited "a main body portion comprising a defined pocket having an anterior wall, a posterior wall, and a side wall in between the anterior wall and the posterior wall, wherein the anterior wall, the posterior wall, and the side wall define an interior portion of the defined pocket." EX1015, p. 24.

During prosecution of the '232 Patent, the Examiner cited Black as a secondary reference to teach "a bridge structure protruding from an interior surface of the posterior wall, the protruding structure comprising a plurality of spaced contact points that keep the anterior wall separated from the posterior wall during suction." EX1015, pp. 51-52. Specifically, the Examiner pointed to transverse walls 48c shown in FIG. 3b of Black. *Id.*

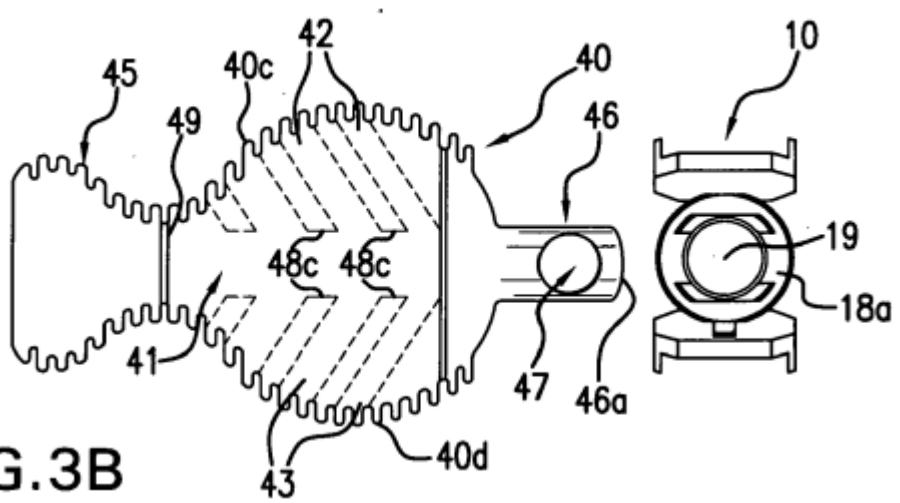

FIG.3B

In the first Office Action, the Examiner said, "Black et al. discloses an intraoral suction device comprising a wave-shaped bridge structure 48c having formed therein the interior wall of the device 40 (FIG. 3B; paragraph 80). Note that the troughs between bridges/transverse walls 48c allow for communication with the suction source." *Id.* In response to the First Office Action, Patent Owner focused its arguments on the primary reference, and only said this about Black: "Likewise, *Black* was merely relied upon to teach the claimed 'bridge structure' recited in dependent claims 8-10. *Black…* lacks any teaching that would teach the claim limitations of independent claim 1 that are missing from [primary reference]." EX1015, pp. 91-93. In other words, Patent Owner did not expressly disagree with the Examiner's rejection of dependent claims 8-10, did not argue that the Examiner erred in suggesting that Black teaches a bridge structure, or in any way argue against this interpretation of Black or the conclusion that Black taught a bridge structure.

In the Second Office Action, the Examiner again cited Black, but noted that claim 9, which recited that contact points of the bridge structure formed a wave shape with contact points at crests of the wave shape, was now allowable over Black (and the primary reference). EX1015, pp. 109-111. The Examiner provided no reason why this limitation was allowable now but not in the First Office Action. Importantly, however, the Examiner found that Black taught "a bridge structure protruding from an interior surface of the posterior wall, the protruding bridge

structure comprising a plurality of spaced contact points that keep the anterior wall separated from the posterior wall during suction." EX1015, p. 110. Patent Owner accepted the allowable subject matter of claim 9 and received an allowance. EX1015, pp. 130, 140; EX1003, ¶¶ 35-39.

The '418 Patent was a Track One Application. EX1002, pp. 13, 76; EX1003, ¶ 40. The original independent claim presented during prosecution of the '418 Patent recited claim limitations very similar to U.S. Patent No. 12,011,329 and no longer recited a sidewall, instead reciting a "third wall." EX1002, pp. 23-29. The claims were rejected for failing to comply with the written description requirement and indefiniteness, but no prior art was cited against the original claims. EX1002, pp. 113-115. Patent Owner amended the claims to address these § 112 rejections, and the application was allowed thereafter. EX1002, pp. 215-222, 260; EX1003, ¶ 41.

V. **A PERSON HAVING ORDINARY SKILL IN THE ART**

The prior art and the Black Declaration demonstrate that a PHOSITA, at the time the '418 Patent was filed, would have been a person with at least a B.S. degree in mechanical engineering or a related field with at least two years' experience designing dental devices. Less work experience may be compensated by a higher level of education, such as a master's degree, and vice versa. EX1003, ¶¶ 42–51.

VI. **CLAIM CONSTRUCTION UNDER 37 C.F.R. § 42.104(B)(3)**

Unless otherwise addressed herein, the terms of the ’418 Patent’s claims are to be given their plain and ordinary meaning, as understood by one of ordinary skill in the art, in view of the ’418 Patent’s specification. *See* 37 C.F.R. § 42.100(b); 83 FR 51340; *Phillips v. AWH Corp.*, 415 F.3d 1303 (Fed. Cir. 2005) (en banc). To the extent there is any departure from the plain and ordinary meaning, Petitioner adopted Patent Owner’s constructions implied from their overly broad infringement contentions to demonstrate invalidity. EX1011; EX1003, ¶¶ 52–56.

Patent Owner appears ready to assert a much broader meaning of some terms that are not defined in the specification. For example, Patent Owner has accused Petitioner’s product of infringing at least claim 1 of the ’418 Patent by pointing to two walls of very different sizes and shapes as “corresponding,” and also pointing to a bite block as a “connecting wall of the main body” despite the ’418 Patent describing the main body being *separate* from the mouth prop, and even going so far as to describe the mouth prop as detachable. EX1001, 5:28-46.

The parties are likely to dispute the scope of several terms, such as “end,” “edge,” “corresponding shape,” and “interior surface,” EX1011. Nevertheless, all claims of the ’418 Patent are invalid under either party’s construction.

Notwithstanding their likely suggestion to the contrary, Patent Owner did not invent a dental isolation mouthpiece that prevents suction collapse, nor did they

invent a dental isolation mouthpiece with a wall that connects an anterior wall to a posterior wall at an edge of the mouthpiece.

VII. **BACKGROUND OF DENTAL MOUTHPIECES AND THE PRIOR ART RELIED UPON IN THIS PETITION**

Dentists have isolated tissue and used suction during dental procedures for many years. EX1016, 2:42-46; EX1017; EX1003, ¶ 1-25.

The modern style isolation mouthpieces appears to have started with James Hirsch in 2001 (EX1018). Hirsch taught a suction connector, a bite block for engaging teeth on one side of the mouth, a wide main body that fits into the intraoral cavity for tongue isolation, a narrow neck for wrapping around teeth on the other side of the mouth, and a cheek retractor. EX1018, Abstract. The ’418 Patent follows this same general style and structure. EX1003, ¶ 27.

FIG. 3

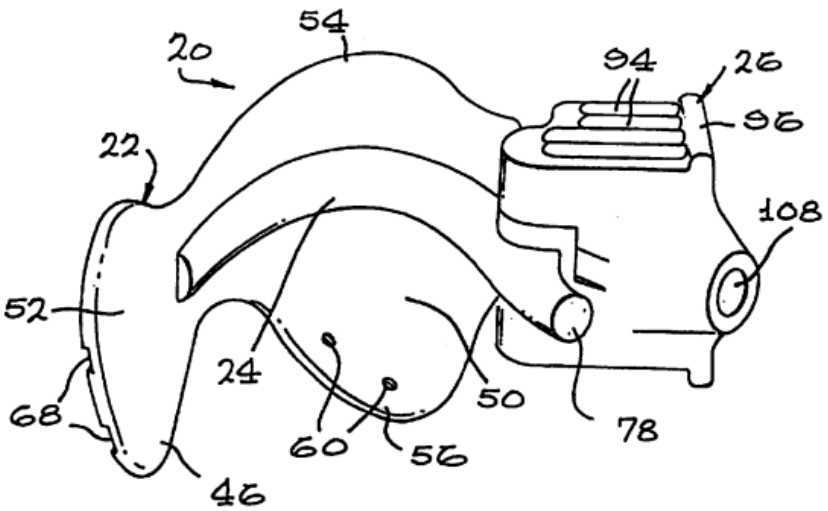

Hirsch improved on his design in 2003. EX1012, FIG. 19A; EX1001, FIG. 1B. The ’418 Patent closely resembles this improved design.

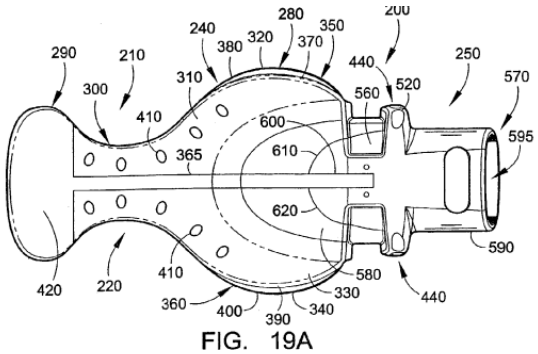

FIG. 19A

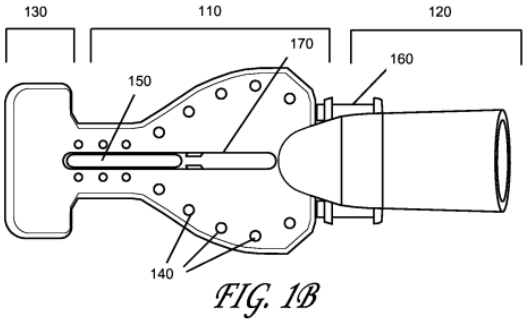

FIG. 1B

A. **Prior Art Patents and Printed Publications Relied Upon**

1. **Black**

Black teaches a dental isolation mouthpiece with the same basic shape as the ’418 Patent. EX1001, FIG. 1B; EX1005, FIG. 4C.

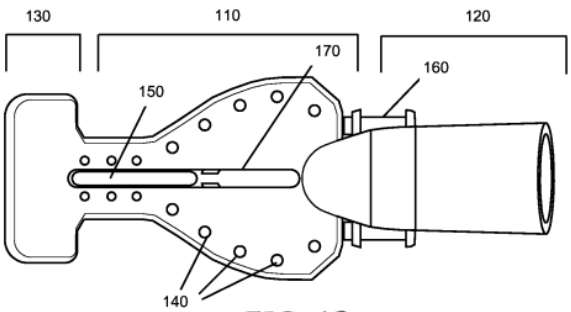

FIG. 1B

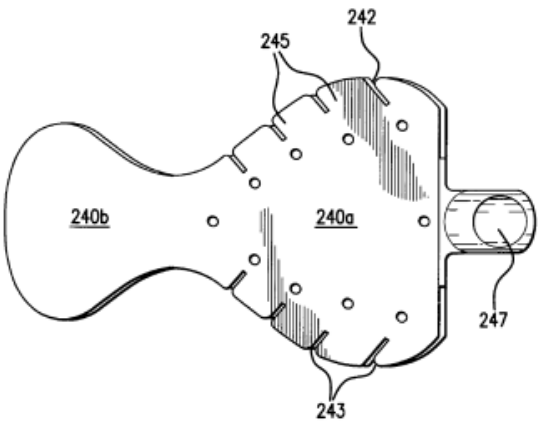

Black discloses an open tongue aspirator with an anterior layer that corresponds in size and shape to a posterior layer with transverse walls connecting the anterior layer to the posterior layer. EX1005, 5:21-59, 14:21-47. The transverse

walls form channels therebetween and prevent the anterior and posterior layers from collapsing under suction. *Id.*; EX1003, ¶¶ 57-60.

Black also teaches a removable bite block. EX1005, 2:1-7, 15:36-51.

2. **Park**

Park teaches an enclosed dental isolation mouthpiece with the same basic shape as the ’418 Patent. EX1001, FIG. 1B; EX1006, FIG. 3.

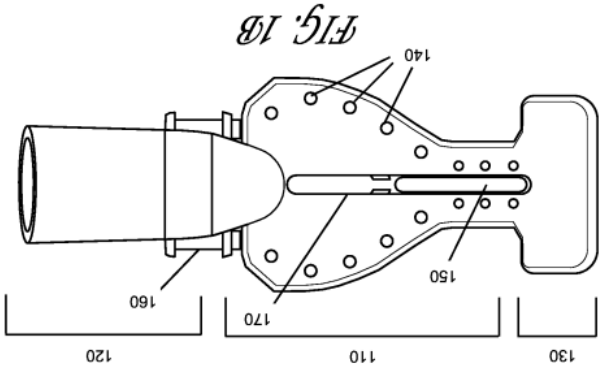

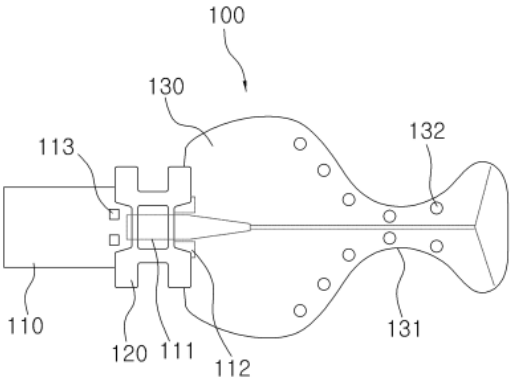

More specifically, Park teaches a mouth prop that includes a hollow insertion port 110 that receives a suction line, a tooth support section 120 that engages a patient’s teeth, and a tongue retractor 130 extending from the insertion port to a cheek retractor. EX1006, Abstract, FIG. 2, FIG. 6. Park shows suction ports 112 extending from the insertion port into the tongue retractor and fluidly connecting to holes 132 formed on both the anterior and posterior wall of the tongue retractor. EX1006, ¶¶ 26-29, 31, 42, FIG. 2; EX1003, ¶¶ 61-63. Park depicts sidewalls

connecting the anterior wall to the posterior wall of the mouthpiece. EX1006, FIG. 2.

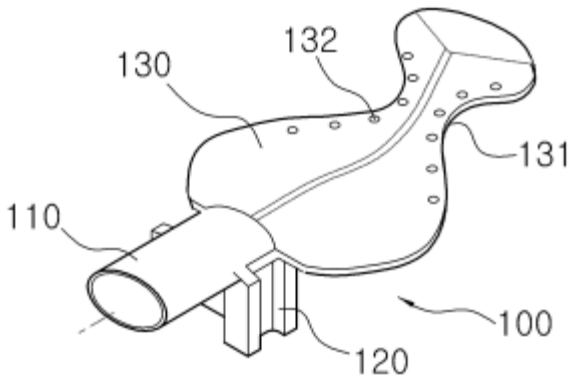

3. **Baughan**

Baughan teaches a saliva ejector that includes projecting discs 17 that prevent a sleeve 24 from collapsing upon a suction tube 15 during applied suction. EX1007, 3:43-48, FIGs. 2-3; EX1003, ¶¶ 64-66. The discs 17 are spaced apart from each other and form a wave shape. *Id.*

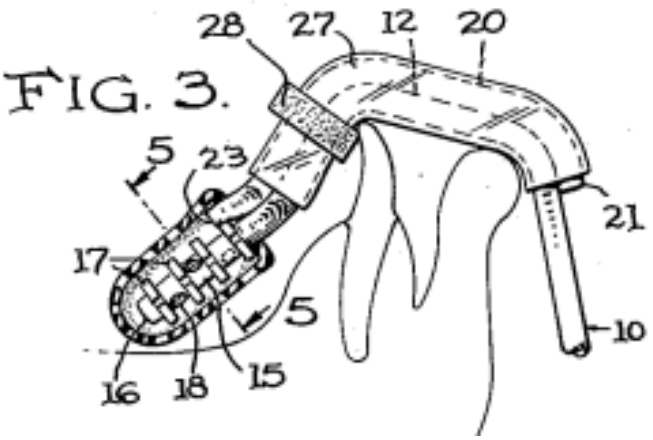

4. **Johnson**

Johnson teaches integral projections 81-86 formed on a flat surface in a dental apparatus. EX1008, 4:16-23, FIG. 3; EX1003, ¶¶ 67-69. Johnson also teaches the use of injection molding for creation of plastic, dental apparatuses as a single piece. EX1008, 5:20-31, 4:5-16; EX1003, ¶ 67.

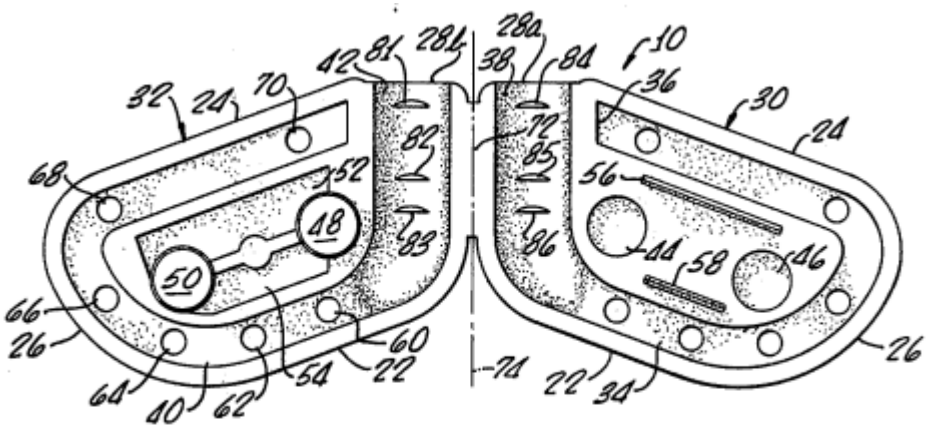

FIG. 3.

5. **Hirsch**

Hirsch also teaches a dental isolation mouthpiece with the same basic shape as the ’418 Patent. EX1001, FIG. 1B; EX1012, FIG. 19A; EX1003, ¶ 70.

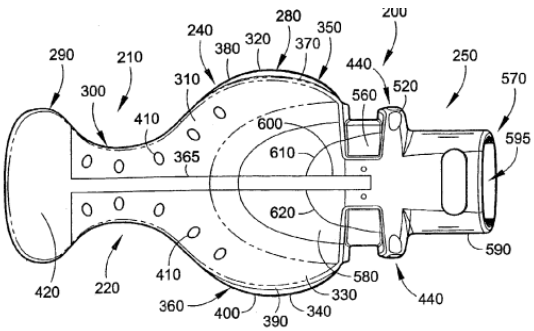

FIG. 19A

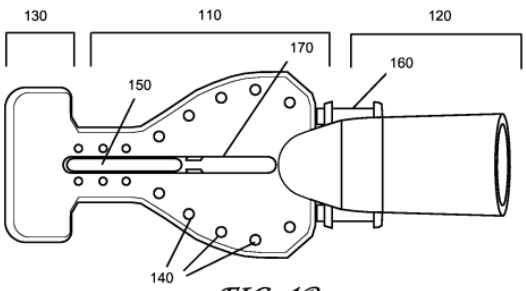

FIG. 1B

Hirsch teaches a dental isolation mouthpiece having a spine formed along a longitudinal axis of the isolation mouthpiece. EX1012, ¶ 78.

6. **Zheng**

Zheng teaches a mouthpiece similar in design to Hirsch with a cheek retractor (area in dashed) that connects the first wall and second wall part way through the cheek retractor. *See* EX1021, FIG. 2 (annotated); EX1003, ¶ 71.

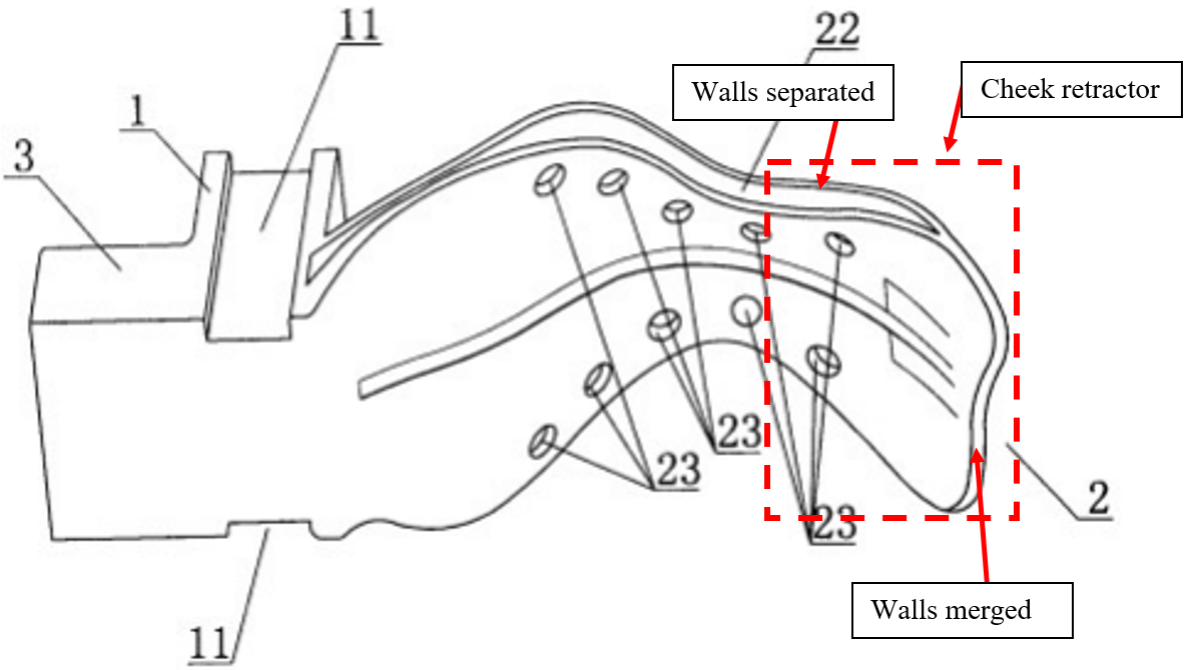

VIII. DISCRETION UNDER § 325(D) AND § 314

Pursuant to the guidance included in the "FAQs for Interim Processes for PTAB Workload Management", Petitioner omits any preemptive arguments against discretionary denial. Petitioner will present arguments in an Opposition Brief, should Patent Owner file a Discretionary Denial Brief.

IX. GROUNDS FOR UNPATENTABILITY

Petitioner requests cancellation of the challenged claims on the following Grounds. EX1003, ¶¶ 72-80, 158, 203, 253, 256-258.

A. Ground 1: Claims 1–9, 11–17 and 19 are obvious under 35 U.S.C. 103 in view of Black and Hirsch

1. Independent Claim 1

a. Limitation 1(a)[2]

Because the claim body fully sets forth the complete claimed structure, and the preamble merely describes an intended use of the dental mouthpiece, the preamble does not instill patentable weight. *Pitney Bowes, Inc. v. Hewlett-Packard Co.*, 182 F.3d 1298, 1305 (Fed. Cir. 1999); *see also Rowe v. Dror*, 112 F.3d 473, 478 (Fed. Cir. 1997); MPEP 2111.02(II); EX1003, ¶ 81.

To the extent the preamble is limiting, Black discloses an intra-oral device 300 that includes a bite member, a tongue shield aspirator, and an evacuation tube. EX1005, 11:54-60, 4:47-55, Abstract. The tongue shield aspirator 340 and the bite member together are a mouthpiece. EX1003, ¶ 82. Black teaches that the mouthpiece is used with a suction device in a dental procedure. EX1005, 19:53-20:47.

[2] Because Petitioner included the full claim language of the ’418 Patent in the Listing of Claims, Petitioner does not reproduce the full claim language here. The Board is encouraged to reference the Listing of Claims to see the full claim language, if necessary.

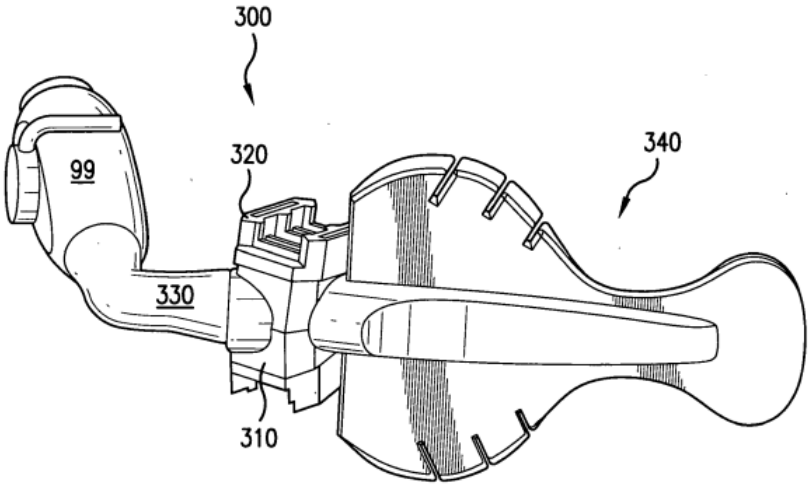

FIG. 18

b. **Limitation 1(b)**

Black teaches a tongue shield aspirator 340 having a first flap 340a that retracts a patient's tongue and a second flap 340b that retracts a patient's cheek. EX1005, 14:1-9. The first flap 340a is a main body. EX1003, ¶ 83. As shown, the first flap 340a has a first end (left end in FIG. 23A below) and a second opposite end (right end in FIG. 23B below). Annotated FIG. 23A below shows that the second end is narrower than the first end.

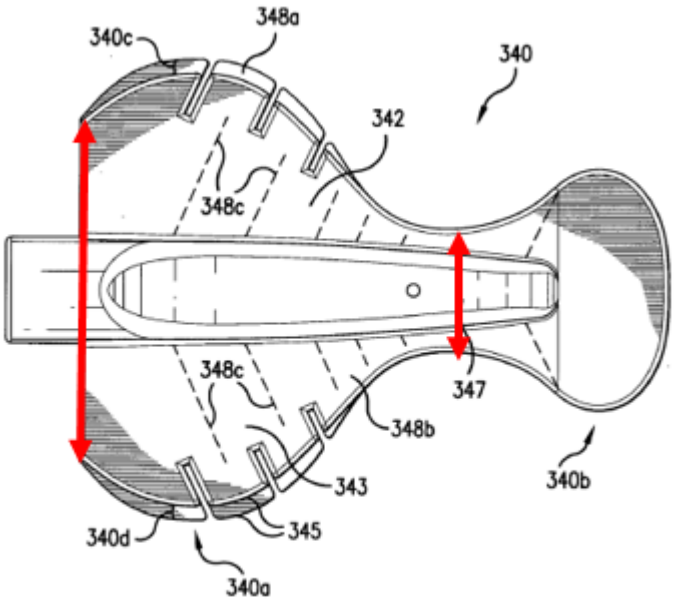

FIG.23A

c. **Limitation 1(c)**

Black teaches that the first flap 340a includes a posterior layer 348a. EX1005, 14:25-30. A PHOSITA would consider this to be a first wall. EX1003, ¶ 84. FIG. 23B of Black shows that the posterior layer 348a has a shape defined by multiple edges, and that the posterior layer 348a extends from the first end to the second end.

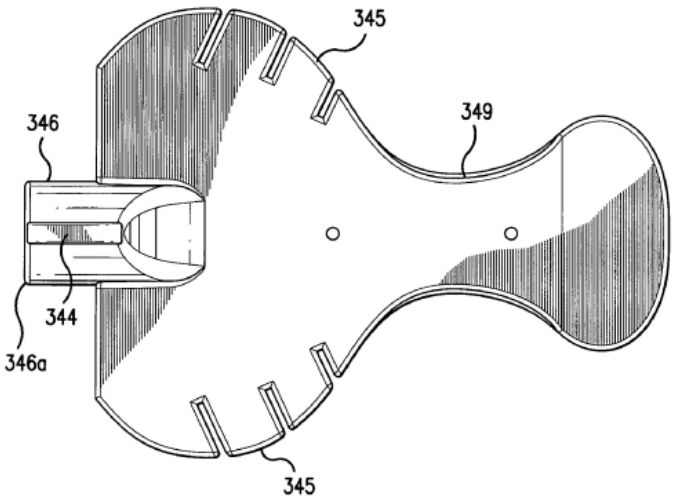

FIG.23B

d. **Limitation 1(d)**

Black teaches that the first flap 340a includes an anterior layer 348b. EX1005, 14:25-30. A PHOSITA would consider this to be a second wall. EX1003, ¶ 85. FIG. 23A of Black shows that the anterior layer has a shape defined by multiple edges, and that the anterior layer 348b extends from the first end to the second end.

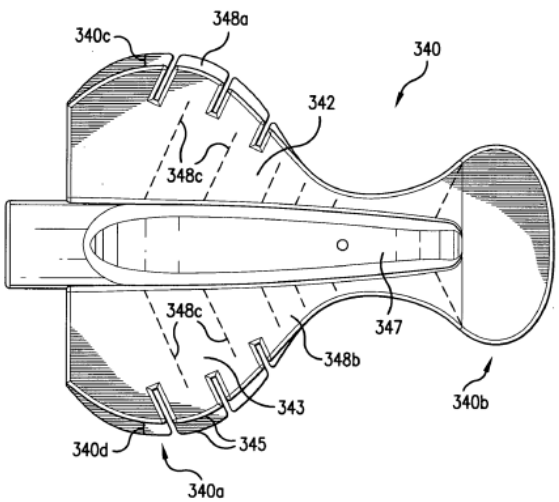

FIG.23A

The posterior layer 348a is spaced apart from the anterior layer 348b by transverse walls 348c. EX1005, 14:25-30; EX1003, ¶ 86. FIG. 23C of Black shows an interior area between the posterior and anterior layers 348a, 348b, and FIG. 23A of Black show the channels 342, 343 created between the transverse walls 348c. EX1005, 14:30-63; EX1003, ¶ 86. The tongue shield aspirator 340 also has a longitudinal lumen that runs down the center of the mouthpiece and is fluidly connected to each channel 342, 343. EX1005, FIG. 3B, FIG. 23A, 14:21-25; EX1003, ¶ 86. Both the lumen and the channels 342, 343 are interior spaces between the posterior layer 348a and the anterior layer 348b.

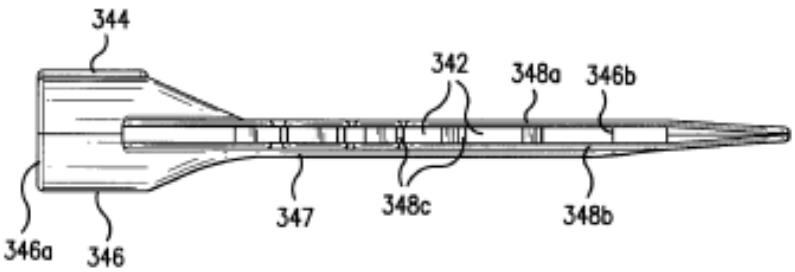

FIG.23C

Black, in a different embodiment, teaches a tongue shield aspirator having first and second pluralities of holes (perforations) formed along first and second edges of the second wall, respectively. EX1005, FIG. 4C; EX1003, ¶ 87-88. To the extent obviousness is required here, combining features between embodiments within the same reference "does not require a leap of inventiveness." *Boston*, 554 F.3d at 991; EX1003, ¶ 89.

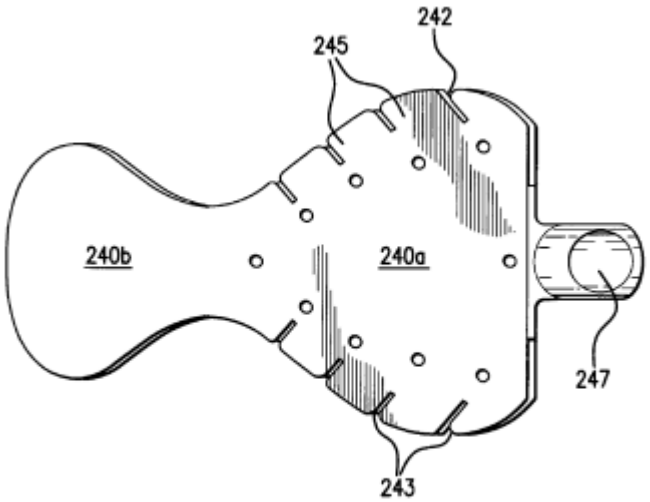

FIG.4C

Alternatively, it would have been obvious to a PHOSITA, to include perforations in the anterior or posterior layer 348a of Black in view of Hirsch. Hirsch discloses an intraoral device 200 having flaps 310, 320, 330, 340. EX1012, ¶ 79, EX1003, ¶ 90. The flaps 310, 320, 330, 340 have evacuation holes 410 (perforations) extending along the edges of the flaps 310, 320, 330, 340. Therefore, Hirsch teaches this limitation. *Id*.

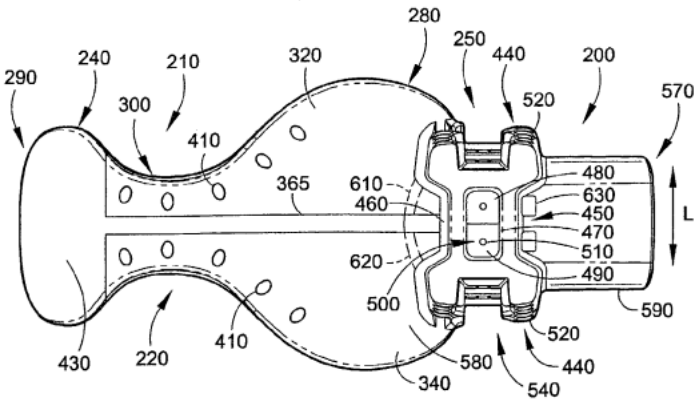

FIG. 19E

A PHOSITA have been motivated to modify either the anterior or the posterior layer 348a of Black to include the evacuation holes 410 improve the suction through the tongue shield aspirator 340 and allow for suction through the anterior or posterior wall in case fluid escaped the barrier created by the tongue shield aspirator or fluid pools in the mouth. EX1012, ¶ 71; EX1003, ¶ 91. A PHOSITA would have expected success in adding holes to the anterior and posterior layer because both Black and Hirsch teaches that holes on those layers can result in suction through those layers. EX1003, ¶ 91.

e. **Limitation 1(e)**

Black teaches transverse walls 348c spaced apart from each other to form channels 342 therebetween. EX1005, 14:21-47. Black explains that these transverse walls form conduits for debris and fluid, "thereby allowing for simultaneous aspiration of debris and fluid from top (palate of mouth) to bottom (floor of mouth), and through the passageway, during dental procedures." EX1005, 14:38-47. Black also explains that the transverse walls prevent collapse under suction. EX1005, 14:21-47; EX1003, ¶¶ 92-95. The transverse walls 348c are a wave-like structure, as claimed. EX1015, pp. 51-52; EX1003, ¶¶ 92-95, 98. Indeed, the Examiner also found that Black taught the claimed wave-like structure. *Id*.

The transverse walls extend from an interior surface of the posterior flap 348a and to the anterior flap 348b (transverse walls shown dashed). EX1005, 14:21-47;

EX1003, ¶¶ 96. Thus, the transverse walls are protrusions. *Id.* Also, because the transverse walls connect to both the anterior and posterior wall, they form "contact points" with both the anterior and posterior wall at those connection locations. EX1003, ¶ 96.

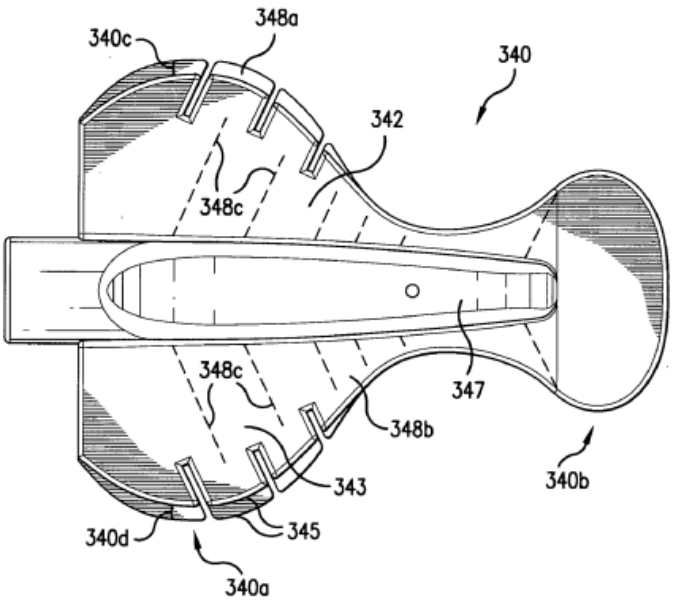

FIG.23A

This limitation requires that the bridge structure has a plurality of "wave-like" protrusions. In light of the specification, this merely means that the wave-like structure needs spaced-apart projections with gaps therebetween. EX1001, 4:55-5:7, EX1003, ¶ 97. The resulting shape of any such bridge structure is necessarily a wave shape. EX1003, ¶ 97. Black teaches a square wave shape formed by the channels 342 and the transverse walls 348c (i.e., the presence transverse walls 348c and the

gaps therebetween that form the channels 342). *See*, annotated FIG. 23C below. EX1003, ¶¶ 97-98.

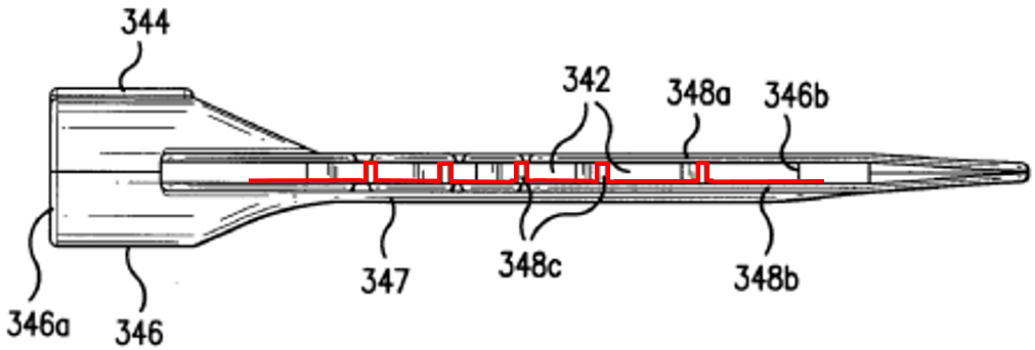

FIG.23C

f. **Limitation 1(f)**

Black teaches that the first flap 340a has an anterior layer 348b and a posterior layer 348a having shapes defined by edges on the upper and lower sides of the layer, respectively. EX1005, 14:25-30, FIG. 23A; EX1003, ¶ 99.

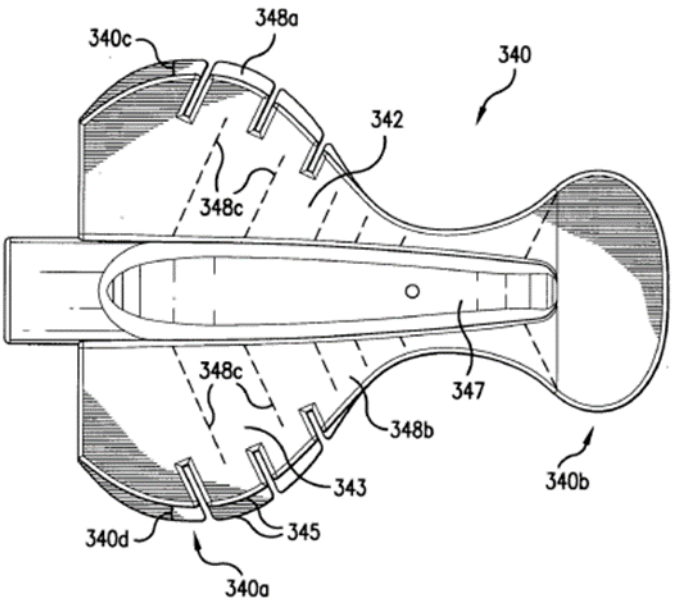

FIG.23A

As clearly shown in FIG. 23A, the upper and lower edges of the anterior layer 348b are very similar in size and shape to the respective upper and lower edges of the posterior layer 348a, such that a PHOSITA would understand that the first (upper) edge of the first wall corresponds to the third (upper) edge of the second wall and the second (lower) edge of the first wall corresponds to the fourth (lower) edge of the second wall. EX1003, ¶ 100.

Admittedly, in FIG. 23A, the posterior layer 348a is slightly larger than the anterior layer 348b. EX1005, 15:57-63; EX1003, ¶ 101. Other embodiments in Black show anterior and posterior layers that are identical in size and shape. *See*, EX1005, FIG. 4C.

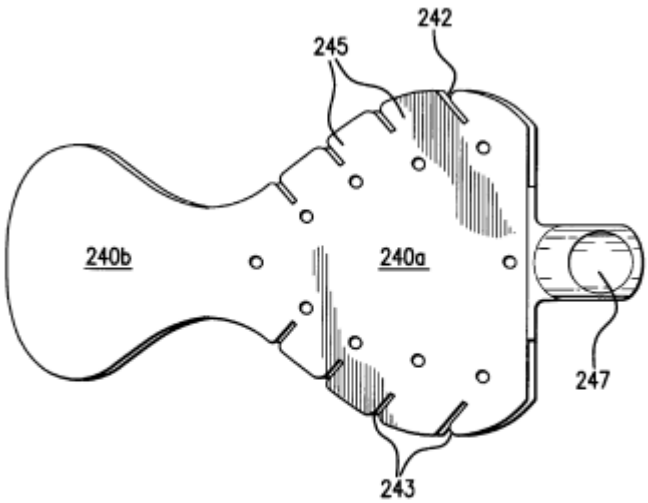

FIG.4C

Combining features between embodiments within the same reference "does not require a leap of inventiveness." *Boston*, 554 F.3d at 991; EX1003, ¶ 102.

Patent Owner appears to be construing "corresponding" to mean something like a general resemblance in the size and shape of the two walls, which is much broader than "identical in shape and size." EX1011, pp. 4-5. However, as shown above, Black clearly teaches an anterior layer that corresponds in shape to the posterior layer such that the edges of the posterior and anterior layers correspond to one another under Patent Owner's implied construction or under the "identical in shape and size" construction. EX1003, ¶ 103.

g. **Limitation 1(g)**

Black teaches that the first flap 340a has a third wall. EX1005, FIG. 23A, *see also* FIGS. 19, 1, 3A, 4C, 24D; EX1003, ¶ 104.

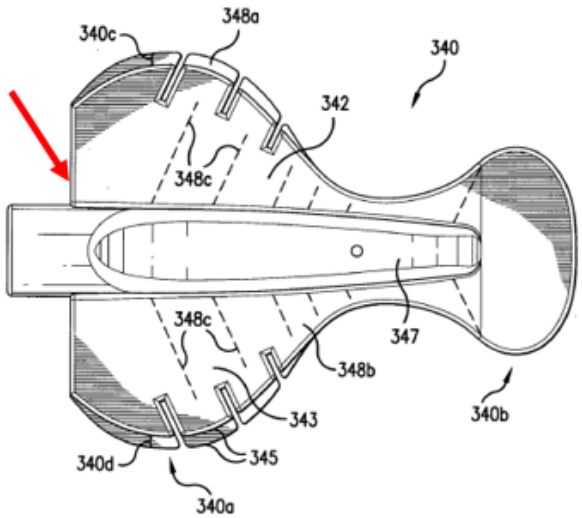

FIG.23A

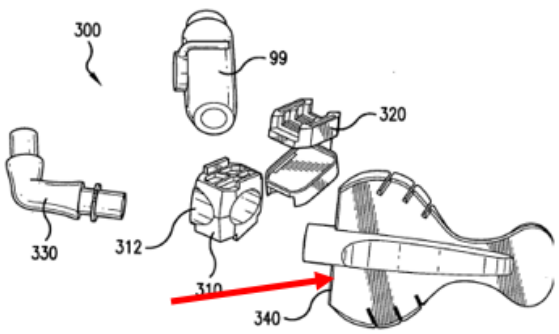

FIG.19

To the extent Patent Owner argues that FIGS. 18–19 and 23A–23C do not definitively show a third wall formed at the point shown above, many of the previous

embodiments unequivocally showed such a third wall. EX1005, FIGS. 19, 1, 3A, 4C, 24D; EX1003, ¶ 105.

For example, the tongue shield aspirator 240 includes a third wall formed near the "hollow neck 246", which is the suction port of the tongue shield aspirator. FIG. 4C clearly shows a wall formed near the suction port and connecting the posterior flap and the anterior flap. It would have been obvious to include the third wall shown in FIG. 4C in the tongue shield aspirator 340 to provide additional structural integrity and more anti-collapse structure near the neck 346. EX1003, ¶ 105.

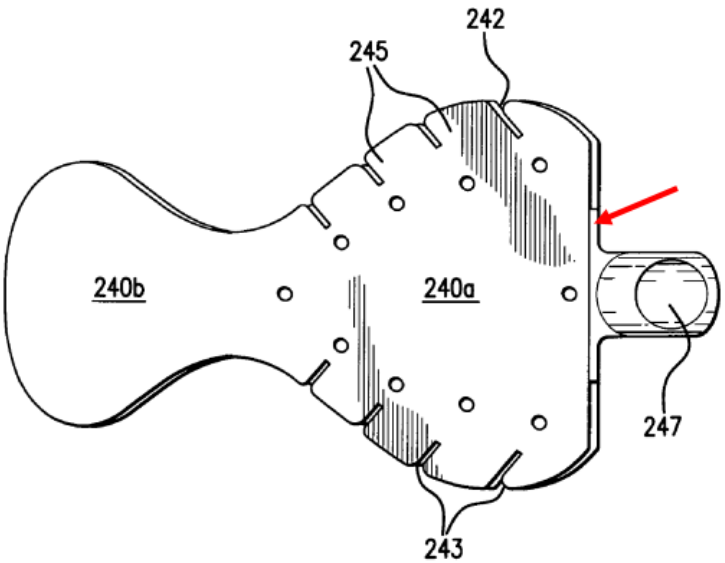

FIG.4C

This wall connects an edge of the anterior flap to an edge of the posterior flap, exactly as claimed. Many other embodiments of Black show similar walls with

different widths varying from partially expanding along an edge of the mouthpiece to extending across the entirety of and edge. EX1003, ¶ 106.

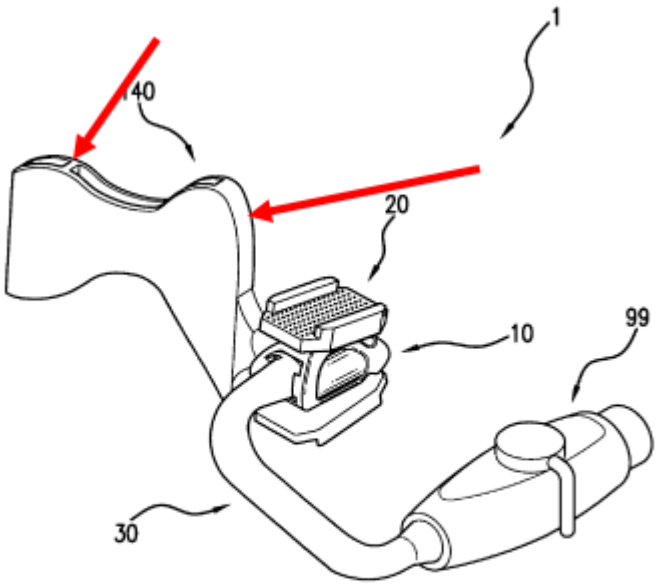

FIG. 1

To the extent that Patent Owner argues that the embodiment shown in FIG. 4C does not connect an entire "edge", it would have been obvious to extend the wall across the entire hollow neck side. Such a change would just be a change in the dimensions or proportions of the wall. MPEP 2144.04; EX1003, ¶¶ 106-107.

h. **Limitation 1(h)**

Black teaches that the anterior layer 348b and the posterior layer 348a are wider at one end. *See* annotated FIG. 23A; EX1003, ¶ 108.

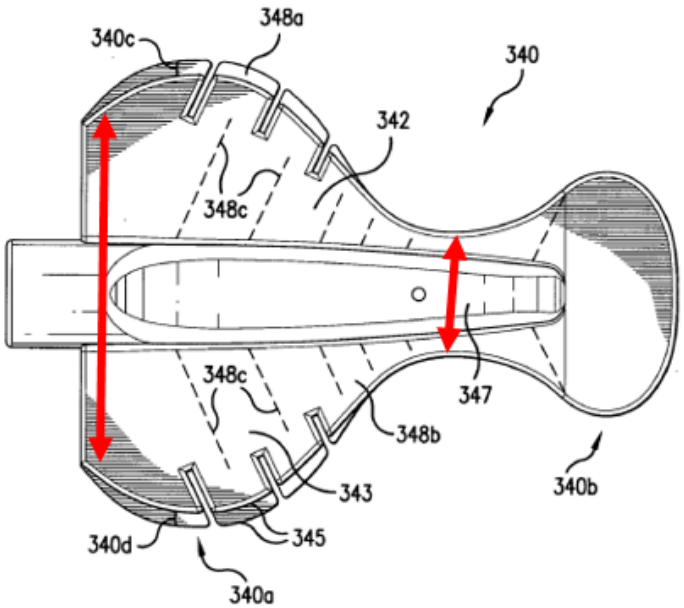

FIG.23A

i. **Limitation 1(i)**

Black teaches a hollow neck 346 formed on one end of the tongue shield aspirator 340 that connects the aspirator 340 to an evacuation tube, which is a vacuum source (HVE valve) that connects to the channels in the tongue shield aspirator. EX1005, Abstract, 1:62-2:7, 10:18-33, 15:21-51, 16:1-3, FIGS. 23C, 24D. Black also teaches that the neck 346 (suction connector) has a conduit through it that is in communication with the channels 342, 343 of the tongue shield aspirator 340. EX1005, 15:21-35; EX1003, ¶¶ 109-111.

Further, Black teaches a "lock-and-key locking mechanism" that interlocks the bite member 310 and the evacuation tube 330. EX1005, 13:16-67; EX1003, ¶ 112. "[T]he lock-and-key mechanism ensures that the evacuation tube [i.e., vacuum source] will not detach from the bite member during use…" EX1005, 13:57-59. This

is exactly, or at worst an obvious variation of, what claim 1 describes. EX1003, ¶ 112.

If Patent Owner argues that Black does not teach a cutout of the suction connector, specifically, it would be obvious to include a cutout on the suction connector in view of Hirsch. Hirsch discloses a connection section 570 (suction connector) that extends from the retractor 240 and attaches to the vacuum-only adapter 230 to deliver suction to the intraoral device. EX1012, ¶ 89, FIG. 19E. The connection section 570 includes a tube 590 having slots 630 that retain corresponding retention barbs on the vacuum-only adapter 230. EX1012, ¶ 90, FIG. 19E. The slots are 630 a cutout, in the form of a hole (i.e. cut out), formed on the suction connector of a mouthpiece and configured to receive corresponding protrusions from a vacuum adapter. EX1003, ¶ 113.

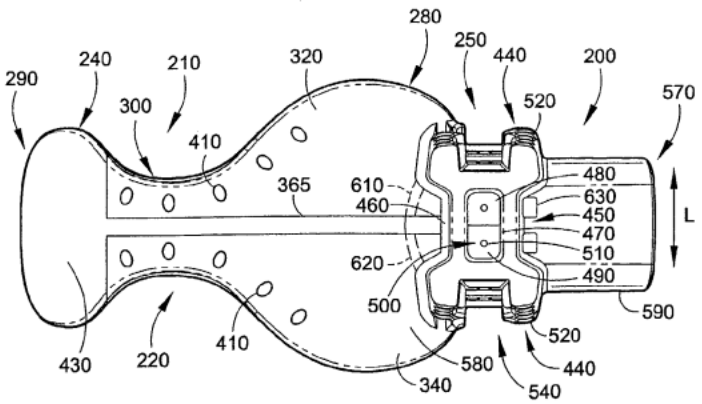

FIG. 19E

It would have been obvious to a PHOSITA to modify Black's neck 346 to include Hirsch's slots 630 at least to make a more secure connection between the

mouthpiece and vacuum source. EX1005, 16:1-7. In fact, Black points out how important it is to have a secure connection to the vacuum source. EX1005, 13:57-59. Holes formed on the suction connector that accept projections on the vacuum tube are merely an obvious variant of Black's lock-and-key mechanism, since it is just choosing from a finite number of identified, predictable solutions, with a reasonable expectation of success. MPEP 2143(I)(E); EX1003, ¶ 114.

j. **Limitation 1(j)**

This limitation requires a mouth prop that has a smaller posterior surface than the anterior surface. Almost all bite blocks are designed in this way. This design follows the natural shape of the mouth when it is open, because the jaw is a hinge, which any PHOISTA would understand based on very basic dental anatomy. EX1003, ¶ 115.

Black teaches a bite member 310 (mouth prop) having a top side 314 and a bottom side 316, and Black teaches that the sides lie in divergent planes (*i.e.*, taper) EX1005, 11:61-12:9; EX1003, ¶ 116.

As shown in FIGS. 19 and 21A, Black illustrates that the bite member 310 includes a bite grip 320 with a plurality of ridges on each side of the bite grip 320. EX1003, ¶ 117.

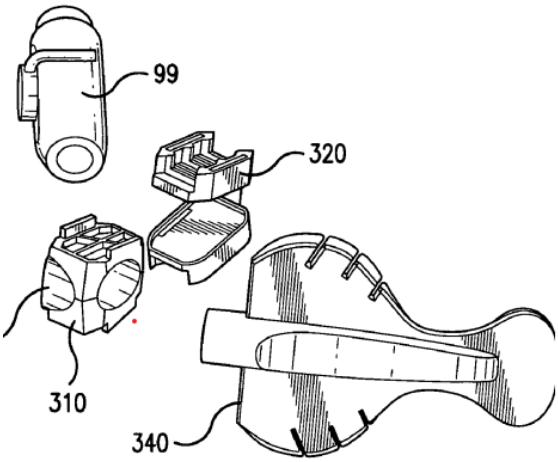

FIG.19

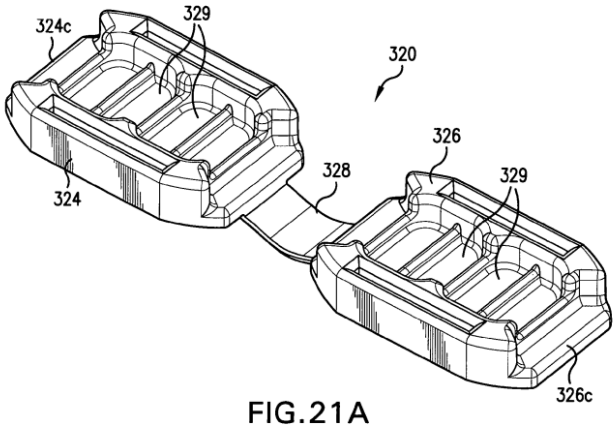

FIG.21A

k. **Limitation 1(k)**

Black teaches a second flap 340b that functions as a cheek retractor and is formed on the opposite side of the tongue shield aspirator 340 from the neck 346. EX1005, 14:5-9, FIG. 23A; EX1003, ¶ 118. As shown in FIG. 23A the second flap 340b is connected to, and expands outwardly away from, the second end of the first flap 340a and has rounded edges.

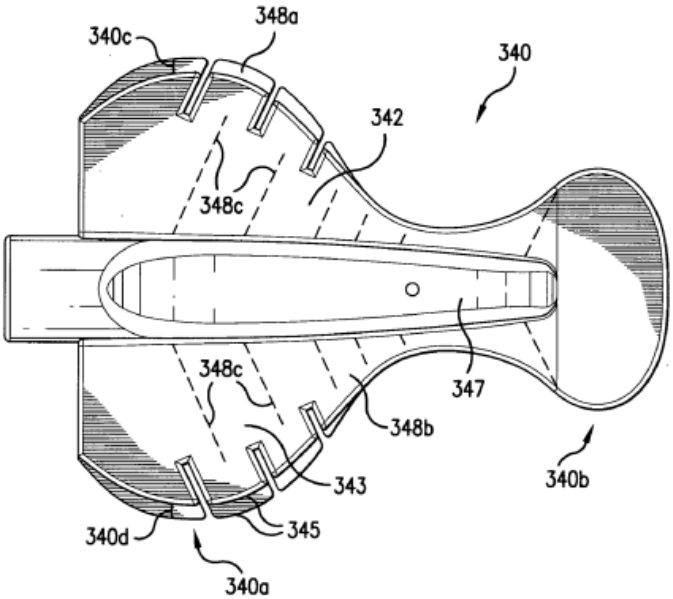

FIG.23A

Therefore, Black in view of Hirsch teaches each and every limitation of claim 1. EX1003, ¶ 119.

2. **Claim 2**

Black teaches a wall having first and second plurality of perforations. EX1003, ¶ 120. FIG. 4C shows that the first plurality of perforations (along the upper edge) has five perforations and the second plurality of perforations (along the lower edge) has five perforations. The perforation nearest the cheek retractor counts as part of both the first and second pluralities of perforations. EX1003, ¶ 120. The claim language does not require the first and second pluralities of perforations be completely separate from one another.

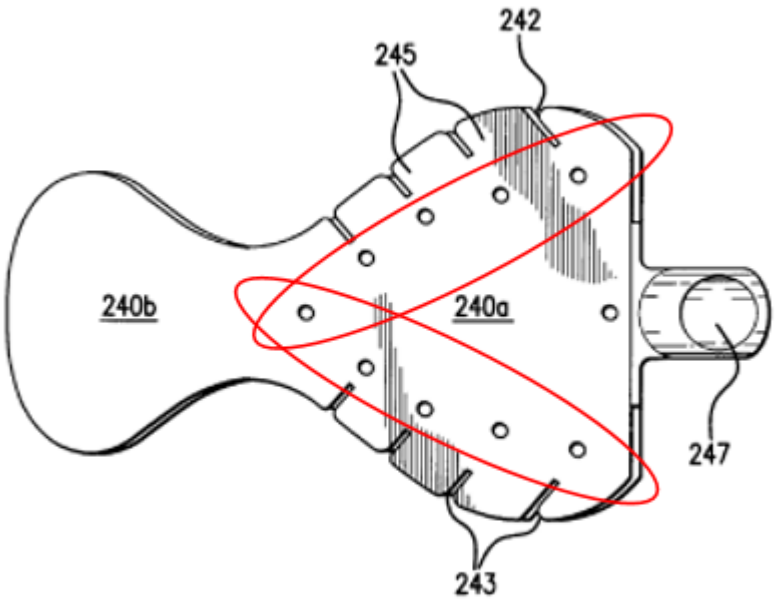

FIG.4C

If Patent Owner argues that there is no overlap between the pluralities of perforations (e.g., there must be at least 10 total perforations), adding more perforations would be obvious to a PHOSITA, as a mere duplication of parts. MPEP 2144.04(VI)(B); EX1003, ¶ 121. Adding more perforations to the tongue shield aspirator of Black would improve suction. EX1003, ¶ 121.

Alternatively, a PHOSITA would find it obvious to modify Black in view of Hirsch to have more perforations to improve suction. EX1003, ¶ 122-123. Hirsch teaches an intraoral device 200 including front flaps 310, 330 having a first plurality of five perforations (along the edge of front flap 310) and a second plurality of five perforations (along the edge of front flap 330). EX1012, ¶ 79, FIG. 19A.

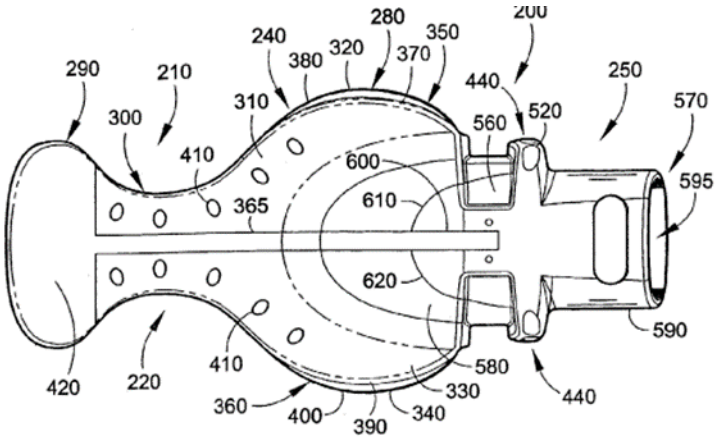

FIG. 19A

3. **Claim 3**

Black, as modified to have the perforations of Hirsch, teaches that at least one of the first plurality of perforations and at least one of the second plurality of perforations are located adjacent to the second narrower end of the main body and near a portion of the first wall that is spaced apart from the second wall. *See* annotated FIG. 19E of Hirsch below. EX1003, ¶ 124-125.

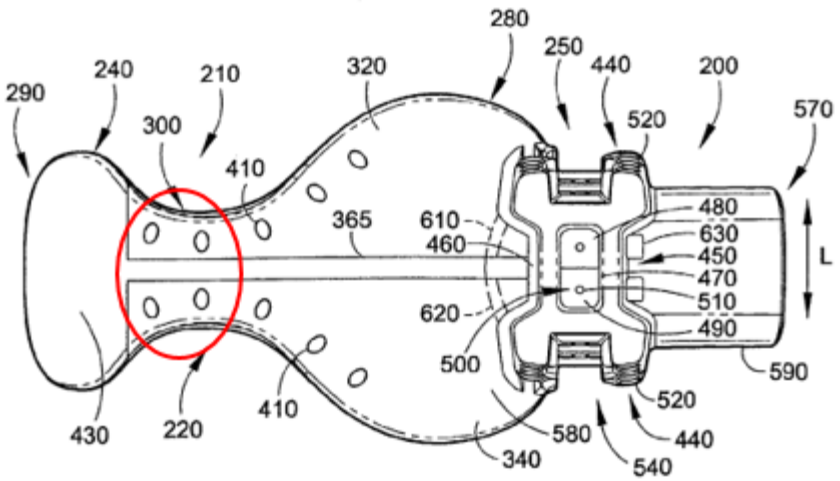

FIG. 19E

4. **Claim 4**

Black teaches a second flap 340b that functions as a cheek retractor and is formed on the opposite side of the tongue shield aspirator 340 from the neck 346. EX1005, 14:5-9, FIG. 23A; EX1003, ¶ 126. As shown in FIG. 23A the second flap 340b is connected to, and expands outwardly away from, the second end of the first flap 340a.

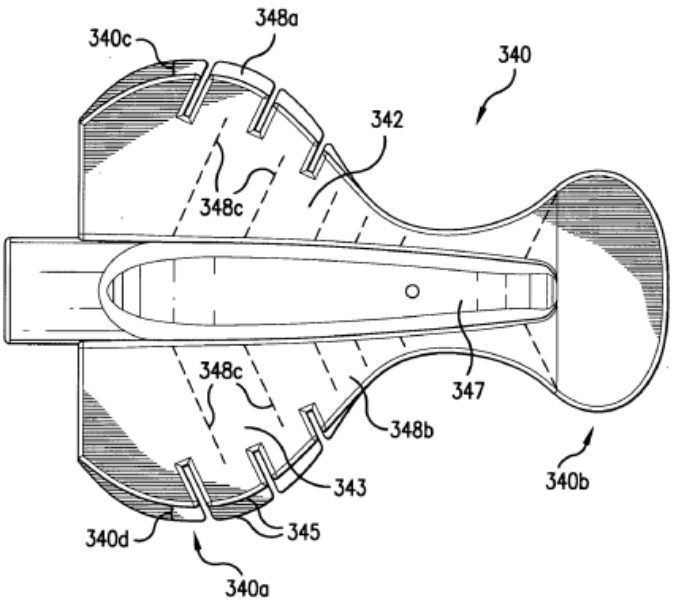

FIG.23A

FIG. 23C of Black illustrates that both the posterior and anterior layers 348b, 348a transition into the second flab 340b (cheek retractor). For a short distance after the narrowest portion of the isthmus (349) the layers 348a, 348b remain separated from one another before merging together to form the cheek retractor. Annotated FIG. 23C (below) illustrates that the posterior layer 348a and the anterior layer 348b

are separated in the cheek retractor portion (dashed area) and then merge together in the dashed area. EX1003, ¶ 126.

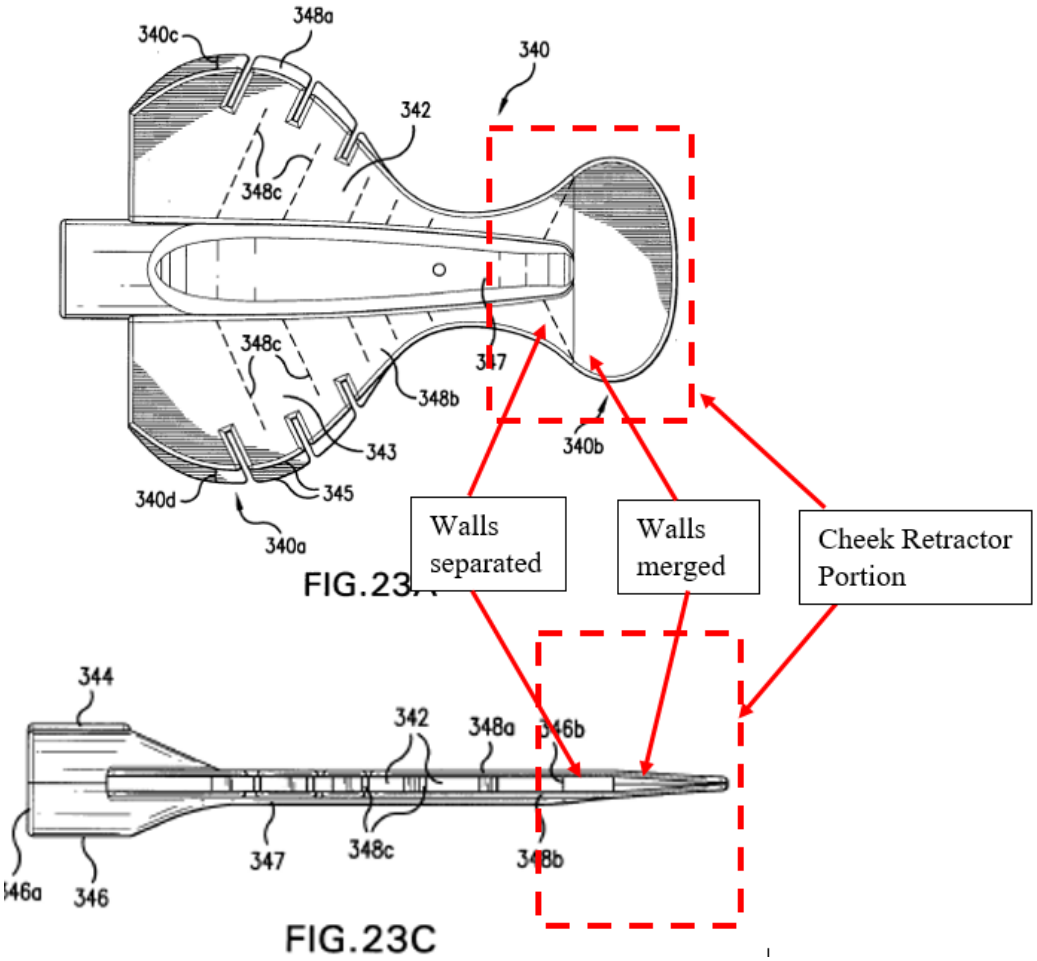

Black explains: "In embodiments of the invention, the upper opening defined by the space between the top edges of the anterior and posterior layers, and the lower opening defined by the space between the bottom edges of the anterior and posterior layers may extend through the transition section 349 (as shown, e.g., in FIG. 23C) *as well as at least a portion of the distal flap 340b*." EX1005, 15:14-20 (emphasis

added). This is exactly how the cheek retractor portion is claimed in claim 1. EX1003, ¶ 127.

If Patent Owner tries to argue that the dashed area above is not the "cheek retractor portion," it should be noted that the specification defines the cheek retractor portion 130 as the area where the mouthpiece widens again after the narrow, "rectangular area." EX1001, FIG. 1B; EX1003, ¶ 128. In fact, the specification specifically says that the narrow rectangular area is part of the "main body portion." EX1001, 4:21-28, 5:22-27. Therefore, the "cheek retractor portion" in Black must be the point where the mouthpiece begins to widen again after the narrow isthmus 349. This is entirely in-line with the specification. EX1001, FIG. 1B; EX1003, ¶ 128. Additionally, Black defines the transition section 349 as "the narrowest section of the tongue shield aspirator," and the distal flap (cheek retractor) as the portion beyond the transition section. EX1005, 14:1-20; EX1003, ¶¶ 127-129.

5. **Claim 5**

See Section IX.A.3; EX1003, ¶ 130.

6. **Claim 6**

As discussed above in Section IX.A.1.i, Hirsch discloses slots 630, which are a cutout, as claimed. As shown in FIG. 19E, Hirsch's slots 630 are rectangular. Changing the slots 630 from rectangular to a shield shape is obvious. MPEP 2144.04(IV)(B); EX1003, ¶¶ 131-132.

7. **Claim 7**

As discussed above in Section IX.A.1.i, Hirsch discloses slots 630, which are a cutout, as claimed. As shown in FIG. 19E, Hirsch's slots 630 are rectangular. Changing the slots 630 from rectangular to triangular is obvious. MPEP 2144.04(IV)(B); EX1003, ¶¶ 133-134.

8. **Claim 8**

Black teaches that the tongue shield aspirator 340 includes a longitudinal stiffener 347 to prevent kinking when the aspirator 340 is flexed and/or bent for placement within the oral cavity. EX1005, 15:63-16:37, FIG. 23A. Put another way, the stiffener 347 reinforces at least a portion of the main body — particularly, the cheek retractor to help provide the necessary force to retract cheek tissue. EX1003, ¶ 135. The stiffener 347 extends along a longitudinal axis of the main body and corresponds to a thickened area of the main body. EX1005, FIG. 23A. Black's stiffener 347 extends from the exterior surface of the anterior layer 348b, and not between the first and second walls.

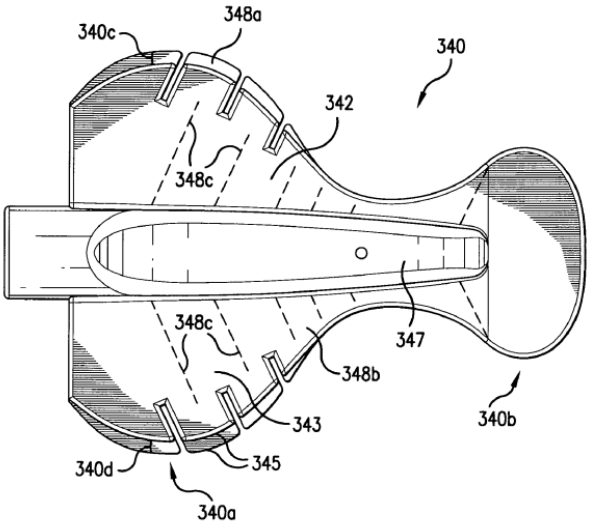

FIG.23A

Hirsh teaches a spine 365 extending (i) along the longitudinal axis of the mouthpiece and (ii) between the first and second walls. EX1012, ¶ 78. The spine 365 reinforces the cheek retractor to help retract cheek tissue. EX1003, ¶ 136.

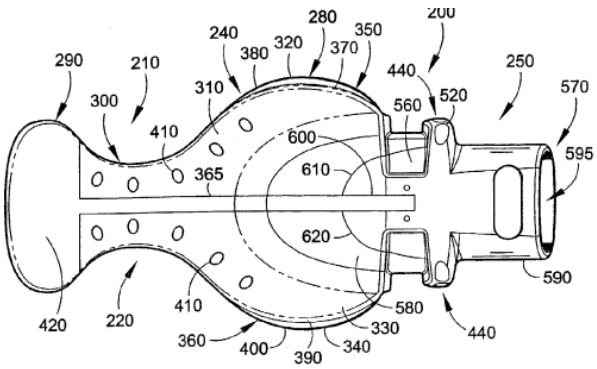

FIG. 19A

A PHOSITA would have been motivated to modify the tongue shield aspirator 340 of Black to include the spine 365 of Hirsch to provide added anti-collapse rigidity and increased cheek retraction force to the tongue shield aspirator 340 of Black. EX1005, 15:63-67. It would be obvious to a PHOSITA that the spine 365 could replace the transverse walls 348 that make up the longitudinal lumen extending

through the mouthpiece and would strengthen those walls near the transition section 349 leading up to the second flap 340b (cheek retractor), thereby providing increased rigidity and cheek retraction force to push cheek tissue away from the procedure area. EX1005, 14:1-20, EX1003, ¶ 137. Adding the spine 365 of Hirsch to the tongue shield aspirator 340 of Black could also simply be seen as moving the stiffener 347 to extend from an inner surface of the anterior layer 348b (where it would extend towards the posterior layer) and not an exterior surface.

Hirsch's spine 365 is a stability bar that is located along a center of the first wall. EX1003, ¶ 138-139. Hirsch teaches that the stability bar is present near the second end of the main body portion. *Id*. FIG. 19A also shows that at least one of the first plurality of perforations is positioned on one side (the top side) of the spine and the at least one of the second plurality of perforations is positioned on another side (the bottom side) of the spine. *Id*.

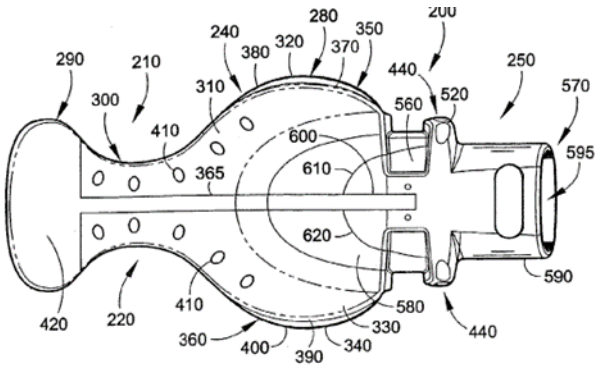

FIG. 19A

9. **Claim 9**

See Section IX.A.8; EX1003, ¶ 140.

10. Independent Claim 11

a. Limitation 11(a)

See Section IX.A.1.a; EX1003, ¶ 141.

b. Limitation 11(b)

See Section IX.A.1.b; EX1003, ¶ 142.

c. Limitation 11(c)

See Section IX.A.1.c; EX1003, ¶ 143.

d. Limitation 11(d)

See Section IX.A.1.d; EX1003, ¶ 144.

e. Limitation 11(e)

See Section IX.A.1.e; EX1003, ¶ 145.

f. Limitation 11(f)

See Section IX.A.1.g; EX1003, ¶ 146.

g. Limitation 11(g)

See Section IX.A.1.h; EX1003, ¶ 147.

h. Limitation 11(h)

See Section IX.A.1.i; EX1003, ¶ 148.

i. Limitation 11(i)

See Section IX.A.1.j; EX1003, ¶ 149.

j. Limitation 11(i)

See Section IX.A.4; EX1003, ¶ 150.

11. **Claim 12**

See Section IX.A.1.i; EX1003, ¶ 151.

1. **Claim 13**

See Section IX.A.2; EX1003, ¶ 152.

1. **Claim 14**

See Section IX.A.3; EX1003, ¶ 153.

1. **Claim 15**

See Section IX.A.1.f; EX1003, ¶ 154.

1. **Claim 16**

See Section IX.A.8; EX1003, ¶ 155.

1. **Claim 17**

See Section IX.A.9; EX1003, ¶ 156.

1. **Claim 19**

Black discloses a tongue shield aspirator 440 including anterior and posterior layers 448a, 448(b) and a neck 446. EX1005, 16:15-49; EX1003, ¶ 157. FIG. 24D shows that the neck 446 (suction connector) is far thicker than the anterior and posterior layers 448a, 448b. *Id*.

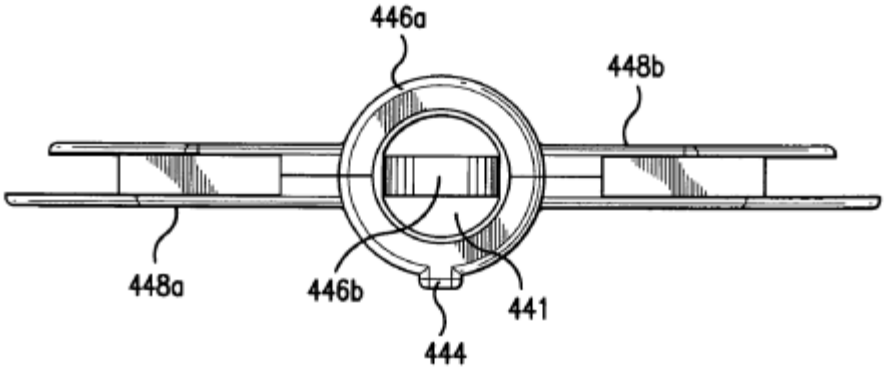

FIG.24D

B. **Ground 2: Claims 20–22 and 24–28 are obvious under 35 U.S.C. 103 in view of Park, Baughan, and Johnson.**

1. **Independent Claim 20**

a. **Limitation 20(a)**

To the extent the preamble is limiting, Park discloses a mouth prop 100, which is an isolation mouthpiece. EX1006, ¶¶ 25-26; EX1003, ¶ 159-160. Park explains that the mouth prop 100 is connected to a suction device for use during a dental procedure. EX1006, ¶¶ 42-43, 51.

b. **Limitation 20(b)**

Park discloses a mouth prop 100 having generally the same shape and configuration as the ‘418 Patent. EX1006, FIGS. 1-3; EX1003, ¶ 161. The mouth prop 100 has a tongue retractor 130, which is the wider portion of the mouth prop 100 that fits in the patient’s mouth. EX1006, ¶¶ 25-26. The retractor 130 is the main body portion. EX1003, ¶ 161.

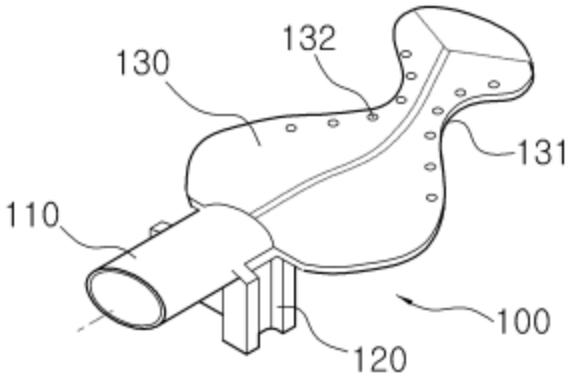

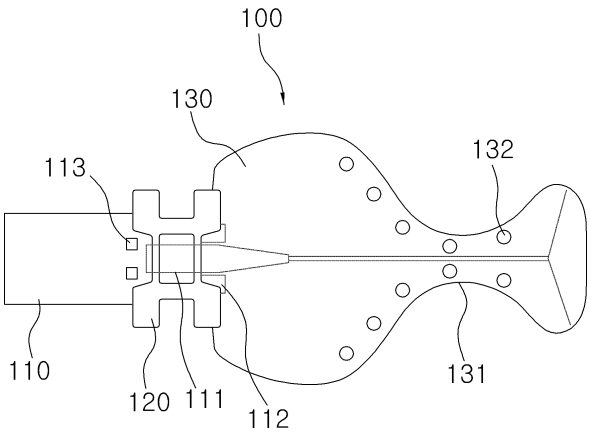

The tongue retractor 130 includes a first end nearest to the insertion port 110 and a second end nearest the concave area 131, which is narrower than the first end. EX1006, FIG. 3, EX1003, ¶ 162.

c. **Limitation 20(c)**

Park teaches that the tongue retractor 130 has a first wall (anterior wall best shown in FIG. 2) having a plurality of edges. EX1006, FIG. 2; EX1003, ¶¶ 163–164. The first wall extends from the first end near the insertion port 110 to the second end near the concave portion 131. *Id*.

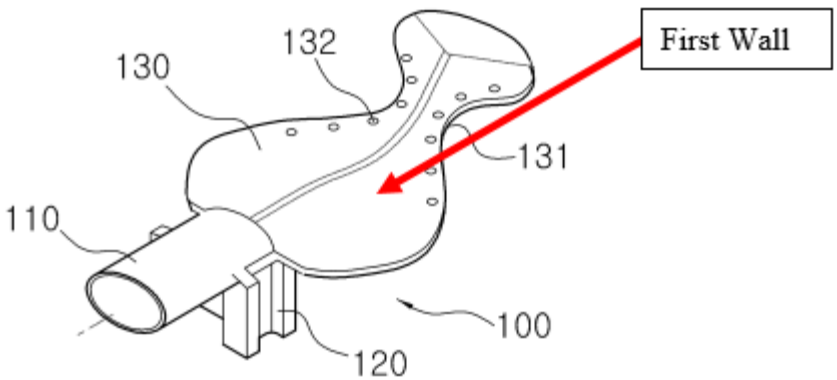

d. **Limitation 20(d)**

The tongue retractor 130 of Park has a second (posterior) wall that is exactly the same shape as the first wall. EX1006, FIG. 2-3; EX1003, ¶ 165. Thus, as shown in FIG. 3, the tongue retractor 130 of Park extends from the first end to the second end and includes a plurality of edges. *Id.*

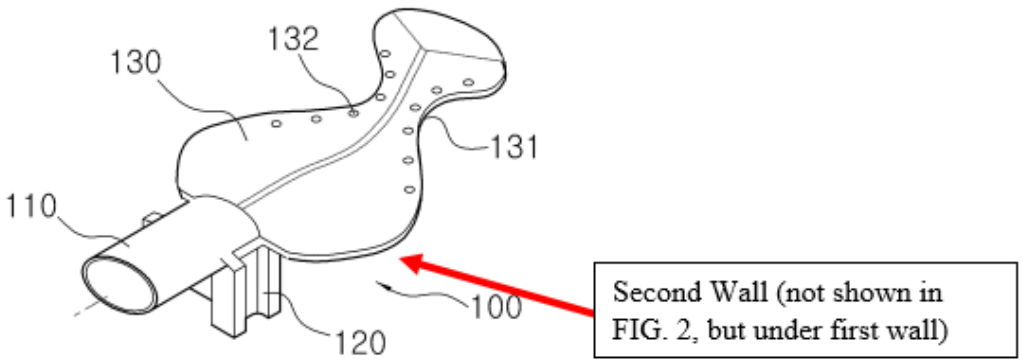

The second wall is spaced at a distance to the first wall because Park has an interior chamber and because of the existence of the sidewalls. The tongue retraction portion 130 defines an interior space. EX1006, ¶ 26; EX1003, ¶¶ 166-168. In fact, the tongue retractor 130 is a four-sided body with an anterior wall, a posterior wall, and two sidewalls that together enclose an interior open space where suction occurs. EX1006, FIG. 2; EX1003, ¶ 166-168. The interior space corresponds to the distance between the first and second wall.

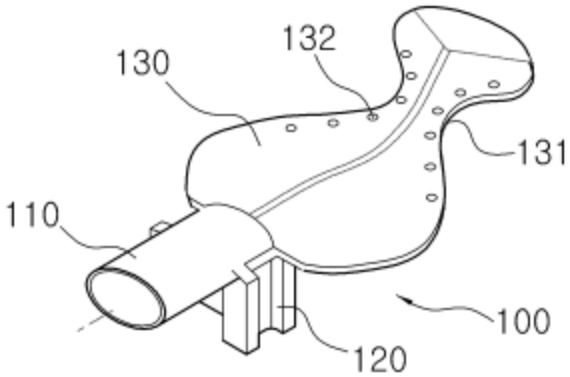

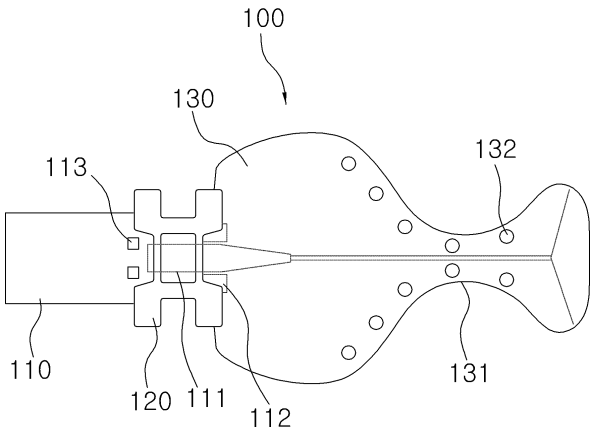

A PHOSITA would recognize Park as an enclosed mouthpiece with sidewalls from FIGs. 1-3 of Park. EX1003, ¶¶ 166-168. FIG. 2 even illustrates the sidewalls extending into the insertion port 110, thereby clearly demonstrating their presence. EX1003, ¶¶ 177-178. Park illustrates a continuous sidewall around all edges of the tongue retractor 130, and that continuous edge extends onto the insertion port 110 and the tooth support section 120. *Id*. Thus, Park illustrates an isolation mouthpiece with sidewalls. EX1006, FIG. 2; EX1003, ¶¶ 178.

The specification further supports this conclusion. As shown in FIG. 3, the mouth prop 100 includes two suction ports 112 formed in the hollow insertion port 110 and extending into the tongue retractor 130. EX1006, FIG. 3, ¶¶ 27-28; EX1003, ¶¶ 173-176. Park teaches that the insertion port 110 is hollow and only *one* end of the insertion port 110 is open. EX1006, ¶ 27-28. Park further teaches that the insertion port 110 has a central interior that includes a post fitting groove 111 and suction ports 112. *Id.* Because only one end of the insertion port 110 is open, Park

teaches that the second end, where the suction ports 112 are formed (see EX1006, FIG. 2), is enclosed and extends into an interior space of the tongue retractor 130. EX1006, ¶ 26-31. Indeed, Park specifically teaches that the tongue retractor 130 extends from the insertion port 110. EX1006, ¶ 26.

The existence of holes further supports the conclusion that Park teaches an interior space. The suction ports 112 only extend partially into the tongue retractor 130, and the suction ports 112 do not extend to the through-holes 132 as a dedicated channel. EX1006, ¶ 26-31, FIG. 3; EX1003, ¶ 171-172. Additionally, Park fails to teach that any suction can occur through the sides of the mouth prop 100. EX1003, ¶ 175. Thus, a PHOSITA would understand that Park's mouth prop 100 has an interior open space that fluidly connects the holes 132 to the suction ports 112. EX1006, ¶¶ 30-31, FIG. 2; EX1003, ¶ 176. If the mouth prop 100 did not include an interior open space formed in the tongue retractor 130, then the holes 132 would serve no purpose, and the suction ports 112 would aspirate nothing. EX1003, ¶ 171. The existence of an interior chamber of the mouth prop is necessary to fluidly connect the suction ports 112 and the holes 132; otherwise Park would be inoperable to perform "suction of foreign substances in the oral cavity." EX1006, ¶ 10.

Finally, Park depicts the suction ports 112 (and the socket 111) using a line of a lighter shade than the edges of the tongue retractor 130. EX1006, FIG. 3; EX1003, ¶ 174. This is likely because the suction ports are only partially visible through clear

silicone, but indicating that they extend into an internal chamber of the tongue retractor 130. EX1006, ¶ 32. These differences in shading are clearer on a computer screen than a printed copy. EX1003, ¶ 174.

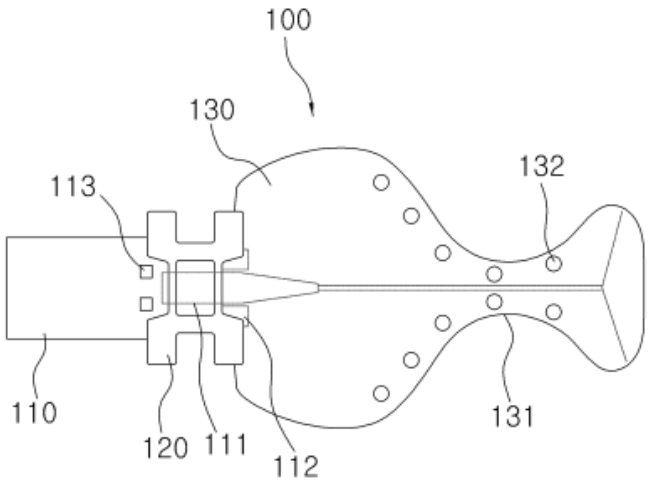

Indeed, a PHOSITA would know that a mouth prop having through holes 132 that do not fluidly connect to the suction ports 112 would allow debris and fluid to pass through the through holes 132 and down a patient's throat, something a PHOSITA would know to avoid. EX1019, 4:16-21; EX1003, ¶¶ 171-172. If the suction connector 112 was not fluidly connected to the holes 132 through the tongue retractor 130 of the mouth prop 100, the suction port 112 would serve no purpose or be extremely ineffective, and a patient might choke or experience severe discomfort by the debris, fluid, etc. passing through the holes 132 during a dental procedure. EX1003, ¶¶ 171-172.

Moreover, a PHOSITA would know that a dentist would position the mouth prop 100 in a patient's mouth such that the concave area 131 would wrap behind teeth on the side of the mouth where a dentist would operate. EX1006, ¶ 47, 31. FIG. 6; EX1003, ¶¶ 169-170; EX1016, 2:13-20, FIG. 2. This is because the whale tale end, opposite the suction connector 112, retracts the patient's cheek near a dental operation. EX1006, ¶ 31. If the through-holes 132 were not fluidly connected to the suction ports 112 through the tongue retractor 130, then the suction ports 112 of the mouth prop 100 of Park would be positioned at the furthest possible location in the mouth from the dental operation. EX1003, ¶ 171-172. A PHOSITA would know that suction should occur as close as possible to the operating area to maximize capture of debris, fluids, and aerosols. *Id*. The farther away suction is positioned from generated fluid, debris, blood, etc., the less powerful it becomes; meaning the suction would not effectively aspirate unwanted fluids and debris in the mouth. *Id*. In other words, a PHOSITA would understand that the mouth prop of Park fluidly connects the suction ports 112 to the holes 132 through an inner chamber of the tongue retractor 130 to guide and channel the suction applied through the suction ports. EX1003, ¶ 176. A PHOSITA would understand that the only logical reason a mouth prop configured to expel debris and fluid (EX1006, ¶ 28, 9) would include through holes 132 is to ensure that suction occurs through the holes 132 via a fluid connection with the suction ports 112, especially considering the holes 132 align with the

location where a dental operation occurs. EX1003, ¶ 169-170. The only way the holes 132 would have an efficient fluid connection with the suction ports 112 is if the mouth prop 100 included an inner chamber through the mouth prop. *Id*. Thus, Park, at worst, implicitly teaches a four-sided mouth prop formed as a pocket with an inner chamber formed between the four walls. *Id*.

Thus, Park teaches a tongue retractor 130 extending form the insertion port 110 to the cheek retractor near the concave portion 131 and having an interior open space formed in the tongue retractor 130 between the suction ports 112 and the holes 132. *Id*.

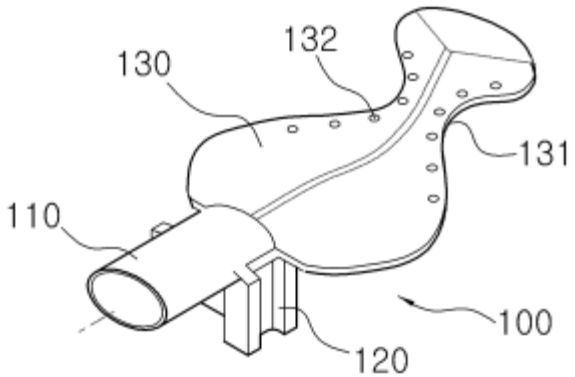

e. **Limitation 20(e)**

Park is silent regarding whether any structures are formed inside the interior chamber of the main body, which may be intentional as Park mentions that "common features," such as anti-collapse structures, are "omitted." EX1006, ¶ 22; EX1003, ¶ 179. However, a PHOSITA would understand that when suction is applied through the suction port 112, the first wall and the second wall are likely to collapse under

the suction force. EX1007, 3:46-48. This collapsing would occur because Park teaches that the mouth prop comprises a flexible material, such as silicone. EX1006, ¶32, 34. The sidewalls and the insertion part 111 would help resist this collapsing force, but a PHOSITA would understand that additional anti-collapsing structure would assist at the weakest areas of the tongue retractor 130. EX1003, ¶¶ 180-183.

More specifically, an area of the mouth prop furthest from a rigid structure, such as the sidewall, the socket 111, or the insertion port 110 would be most likely to collapse under suction. EX1003, ¶ 181. A PHOSITA would understand that these areas, depicted below, are the most likely areas to collapse under suction due to their location and distance from rigid structure. *Id*.

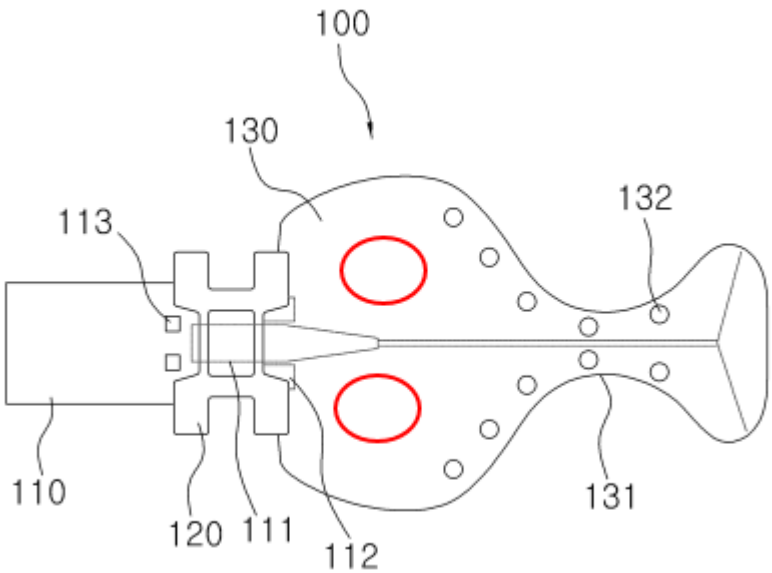

If these areas collapse under suction, suction power would be significantly reduced or blocked entirely. EX1003, ¶ 183; EX1007, 3:46-48. Thus, a PHOSITA would have been motivated to add anti-collapsing structure to prevent collapse. *Id*.

Moreover, it is unclear whether the mouth prop 100 includes a spine or other rigid structure running through the middle of the mouth prop 100. EX1003, ¶ 182. FIG. 3 of Park suggest that something is running from the socket 111 toward the cheek retractor end of the mouth prop. EX1006, FIG. 3.

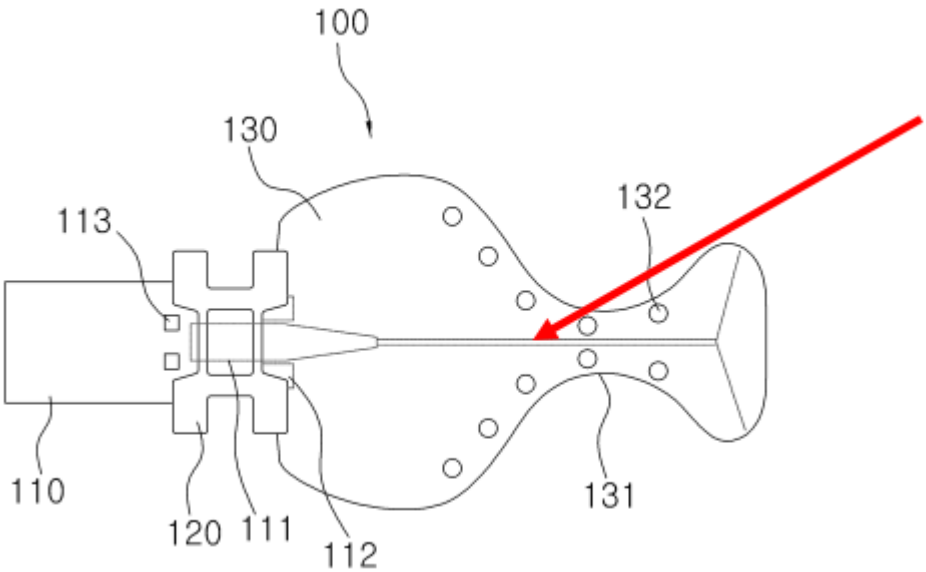

However, this line is not shown in FIG. 6.

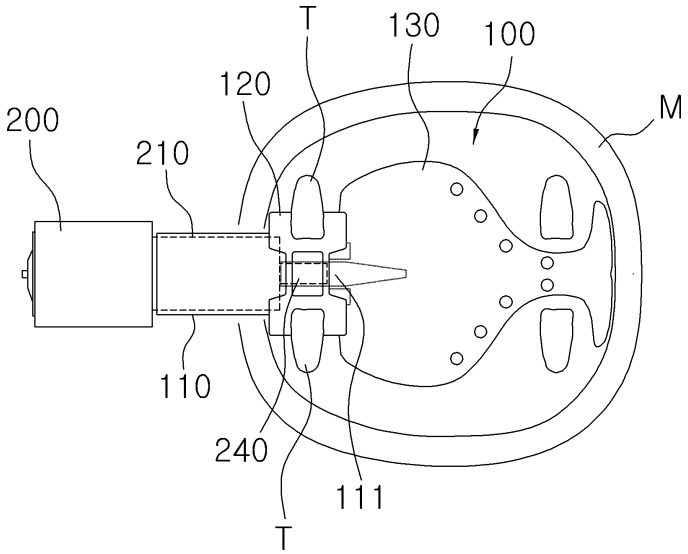

Thus, the line shown in FIG. 3 may not provide any rigidity or anti-collapse features at all and may only assist in guiding light from the light guide 240. EX1006, ¶ 39; EX1003, ¶¶ 182. Thus, the weakest part of the mouth prop may actually be the exact center of the mouth prop (see annotated FIG. 6 below).

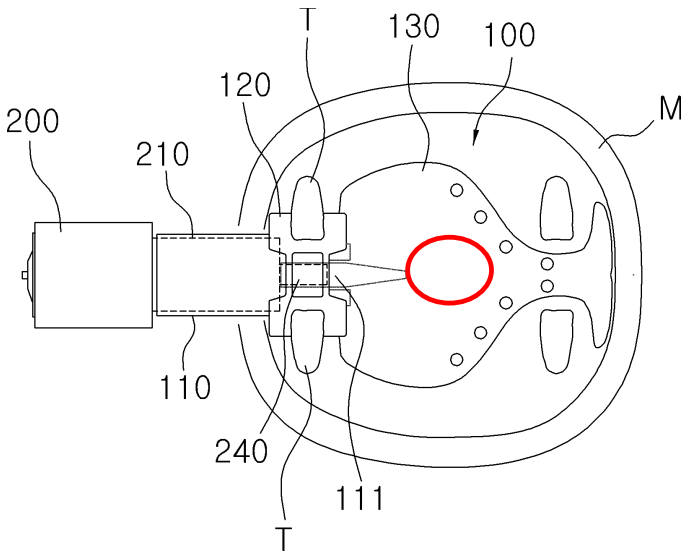

Regardless, a PHOSITA would know that Park is weak in at least one area and may collapse or restrict fluid communication due to wall collapse caused by

suction due to the flexible material comprising the mouth prop 100. EX1006, ¶ 32; EX1003, ¶ 183. To prevent collapse or restriction, a PHOSITA would have been motivated to add mechanical elements that prevent collapse under suction. EX1003, ¶ 183; EX1007, 3:46-48.

Baughan teaches such a mechanical element that prevents collapse under suction. EX1007, 3:43-48. Specifically, Baughan teaches three projecting discs 17 that prevent collapse under suction when a sleeve is inserted over a tube 15. EX1007, 2:19-25, 2:51-55, 3:43-48; EX1003, ¶ 184. The discs 17 project outward from the tube, span the distance between the tube and the sleeve, and engage the sleeve. *Id.* These rigid structures, spaced apart from each other, prevent the sleeve from collapsing under suction. *Id.* Baughan teaches that the projecting discs 17 are secured to the tube 15, and the sleeve rests upon the discs. EX1007, 2:19-25, 2:51-61; EX1003, ¶¶ 184. Thus, Baughan teaches projecting discs connected to and protruding from one structure (the tube 15) but not attached to another structure (the sleeve 24). *Id*.

Baughan teaches that the spaced-apart discs result in a square wave shape having crests and troughs. EX1007, FIG. 3 (annotated below); EX1003, ¶ 185.

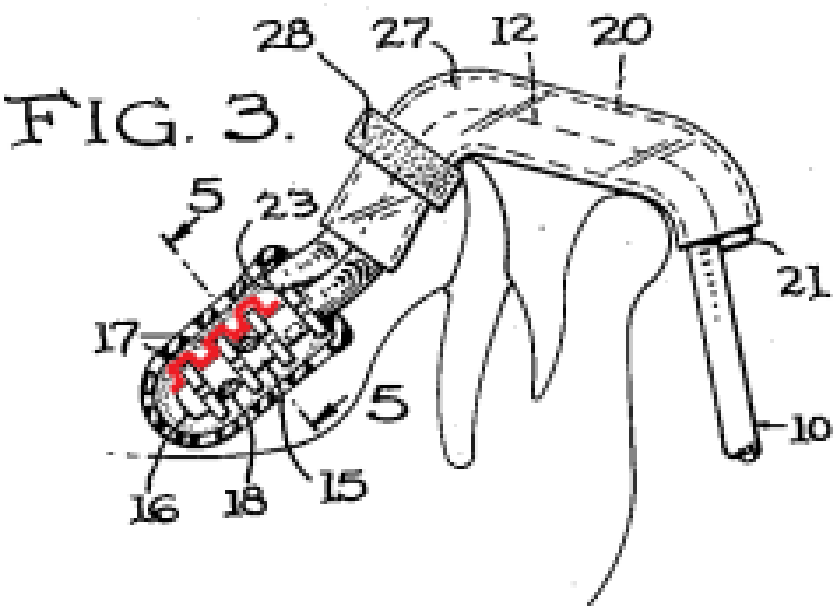

In fact, each individual disc 17 is formed in a wave shape with notches 19 formed in each disc so that saliva "will always be able to pass through." EX1007, 3:40-43. In fact, the notches 19 formed in each disc are described in the same way as the bridge structure of the '418 Patent. EX1007, 3:40-43.; EX1001, 4:66-5:7. As shown below, the notches 19 in the disc also form a square wave shape. EX1007, FIG. 5 (annotated).

While Baughan teaches outward projecting discs, a PHOSITA using basic common sense, would modify the discs 17 for a tube-shaped embodiment to be projections for a flatter, non-tube embodiment. EX1003, ¶ 186; EX1008, FIG. 3. Indeed, it was well known in the art how to make projections on a flat surface. EX1008, FIG. 3, 4:16-23; EX1003, ¶¶ 186-188.

Applying the simple teachings of Baughan and Johnson to Park, it would have been obvious to include a plurality of spaced-apart projections formed on the posterior wall of Park to prevent collapsing of the posterior and anterior walls under suction at weak points of the mouth prop. EX1003, ¶ 188. A PHOSITA would have expected success because these simple mechanical structures ensure separation between two walls that would otherwise collapse under suction. EX1007, 3:43-48; EX1003, ¶ 189. A PHOSITA would have further known that spaced-apart projections ensure that channels for sucking saliva and foreign substances remain between the spaced-apart projections, lest the purpose of Park's mouth prop be defeated. EX1003, ¶ 189; EX1007, 3:36-48; EX1005, Abstract. Modifying Park in view of Baughan and Johnson would involve nothing more than applying a known technique (anti-collapse structure) to a known device ready for improvement (the mouth prop 100 of Park) to yield predictable results (preventing collapse at weak parts of the mouth prop 100 under suction), or combining prior art elements (a mouth prop having an interior chamber) according to known methods (using spaced-apart

projections to prevent collapse under suction) to yield predictable results (the projections would prevent collapse under suction and still allow for suction channels therebetween). EX1003, ¶ 189.

The spaced-apart projections taught by Baughan could be formed on either the first wall or the second wall. A PHOSITA would know that it makes no difference which wall connects to the projections so long as the projections connect to one of the walls. EX1003, ¶ 190; EX1007, FIG. 3

Park in view of Baughan and Johnson would predictably result in multiple projections formed at the weakest point(s) of Park 111. *See* annotated EX1006, FIG. 3 below; EX1003, ¶ 191.

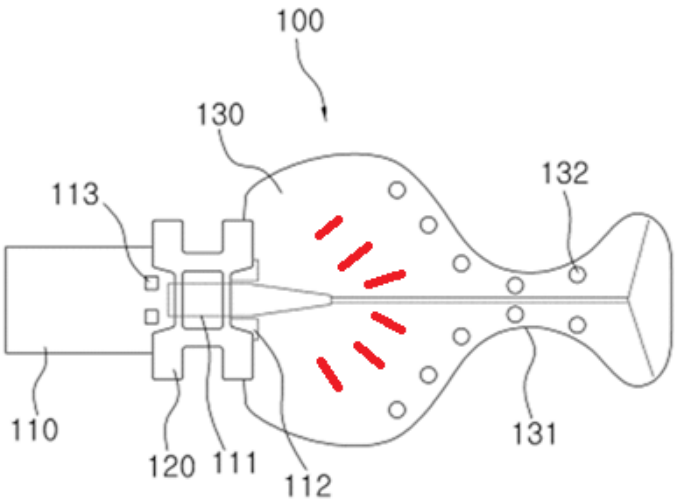

A PHOSITA would know that the projections could be formed at any angle, but angling the projections/troughs toward the holes would create an efficient convergent flow. EX1005, 8:21-39; EX1003, ¶ 188.

Thus, Park in view of Baughan and Johnson teaches limitation 20(e). EX1003, ¶ 191.

f. **Limitation 20(f)**

Park teaches a sidewall ("third wall") that connects all edges of the anterior wall and the posterior wall. EX1006, FIG. 2; EX1003, ¶ 192. As discussed in Section IX.B.1.d, this wall corresponds to the interior space.

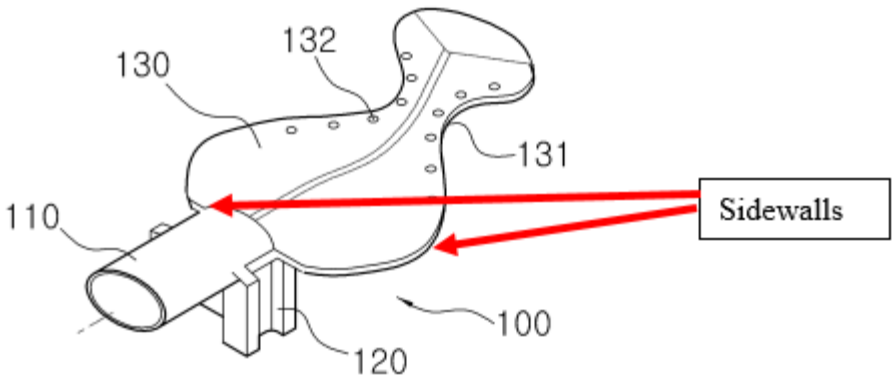

g. **Limitation 20(g)**

Park teaches that the concave section 131 (narrower second end) connects to a cheek retractor, which is formed to the right of the concave section and expands outwardly away from the second narrower end. EX1006, ¶ 31, FIGS. 1-3; EX1003,

¶¶ 193-194. The cheek retractor is shown as connecting to both the anterior and posterior walls of Park. EX1006, FIGs. 1-3.

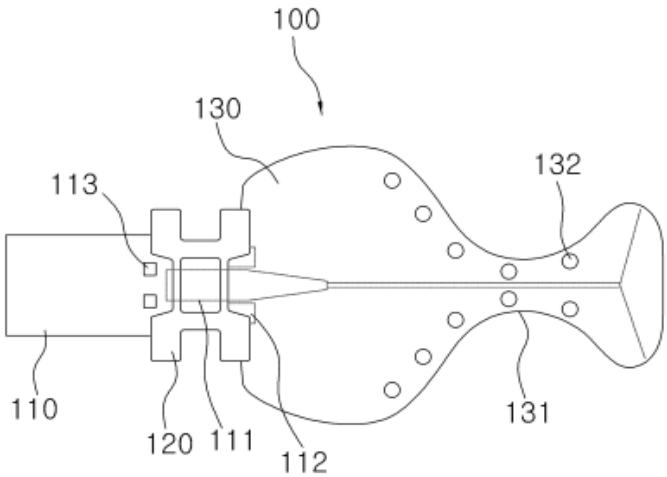

2. **Claim 21**

Park teaches an insertion port 110 extending from an end of the tongue retractor opposite the cheek retractor. EX1006, ¶¶ 26, 31. Park teaches that the insertion port 110 connects to a vacuum source to suction foreign material. EX1006 ¶¶ 26-28, 43; EX1003, ¶¶ 195-196. The insertion port 110 suctions through the suction ports 112 that extend into the inner chamber between the anterior wall and the superior wall explained above. *Id.*; *See* Section IX.B.1.d.; EX1006 ¶¶ 26-28, FIG. 2; EX1003, ¶ 196.

3. **Claim 22**

Park teaches a generally rectangular projection hole 113 that receives a locking projection 211 formed on the vacuum adapter 200. EX1006, ¶ 35. A

PHOSITA would understand that these holes 113 create an interlocking fit with a projection on the vacuum adapter 200. EX1003, ¶ 197.

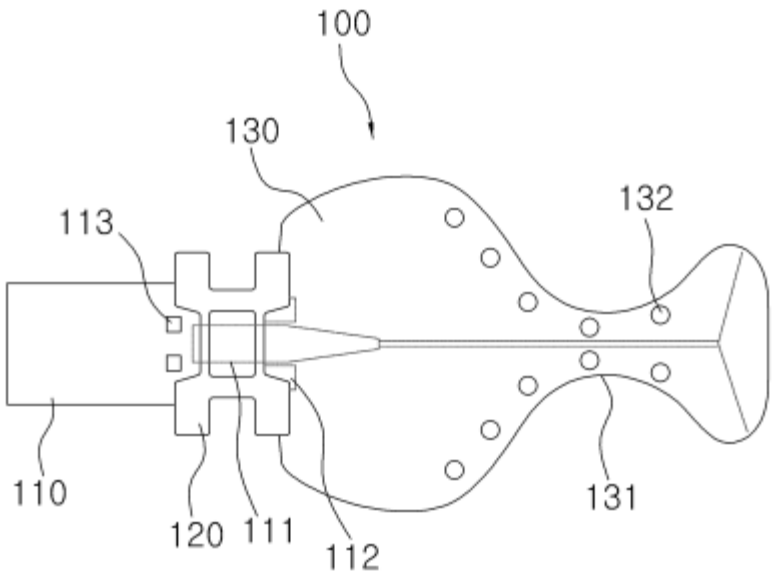

4. **Claim 24**

Park teaches a mouth prop formed of silicone that is reusable after sterilization. EX1006, ¶ 32, Abstract. Park further teaches the mouth prop 100 as transparent. EX1006, ¶ 49; EX1003, ¶ 198.

5. **Claim 25**

Park teaches a mouth prop formed as one piece. EX1006, ¶ 32; EX1003, ¶ 199. A PHOSITA would know that forming silicone is commonly performed using injection molding. EX1003, ¶¶ 199; EX1008, 4:16-23, 5:20-22 (teaching that plastic can be formed using injection molding).

6. Claim 26

Park teaches a tooth support section 120, which is a mouth prop, formed into one piece with the rest of the mouth prop 100. EX1006, ¶¶ 29, 32, 54, Abstract, FIG. 1-3; EX1003, ¶ 200. Park teaches and shows the tooth support section 120 connected to the insertion port 110. EX1006, ¶ 29, FIG. 2; EX1003, ¶ 200.

7. Claim 27

Park teaches that the entire mouth prop is formed as one piece, which includes the insertion port 110 and the cheek retractor. EX1006, ¶¶ 26, 32; EX1003, ¶ 201.

8. Claim 28

Claim 28 lacks antecedent basis for the term "the plurality of perforations." To the extent this claim can be understood, see Section IX.C.1.d; EX1003, ¶ 202.

C. Ground 3: Claims 1–9, 11–17, and 23 are obvious under 35 U.S.C. 103 in view of Park, Baughan, Johnson, and Hirsch.

1. Independent Claim 1

a. Limitation 1(a)

See Section IX.B.1.a; EX1003, ¶ 204.

b. Limitation 1(b)

See Section IX.B.1.b; EX1003, ¶ 205.

c. Limitation 1(c)

As discussed in Section IX.B.1.c, Park teaches a first wall defined by multiple edges. EX1003, ¶¶ 206.

d. **Limitation 1(d)**

As discussed in Section IX.B.1.d, Park teaches a second wall defined by multiple edges. EX1003, ¶¶ 207-208.

Park illustrates holes 132 formed in the posterior wall. EX1006, ¶ 31, FIG 3. Therefore, Park teaches a first plurality of perforations formed adjacent to and extending along a portion of the third edge of the posterior wall, and a second plurality of perforations formed adjacent to and extending along a portion of the fourth edge of the posterior wall. EX1003, ¶ 209. A PHOSITA would instantly recognize that these holes 132 are perforations. EX1003, ¶ 209.

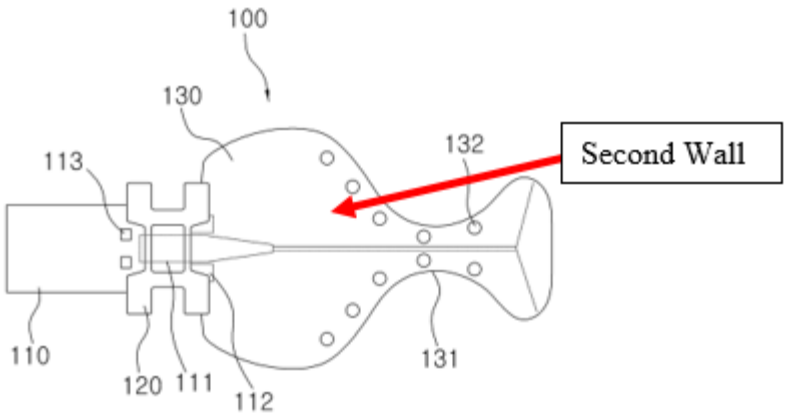

e. **Limitation 1(e)**

See Section IX.B.1.e; EX1003, ¶ 210.

f. **Limitation 1(f)**

Park illustrates that the anterior wall and the posterior wall are identical in shape and size. EX1006, FIG. 2. Thus, the various edges of the anterior and posterior wall correspond in size and shape. EX1003, ¶ 211.

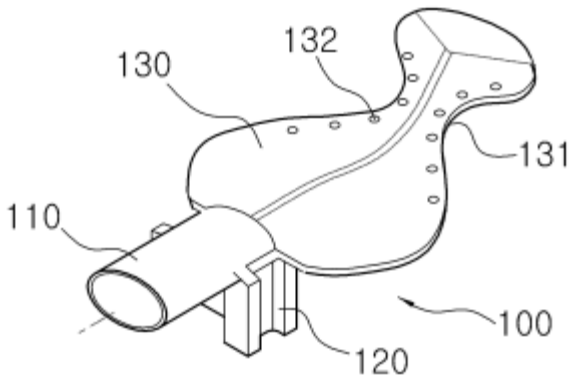

g. **Limitation 1(g)**

As discussed in Section IX.B.1.f, Park teaches a sidewall that connects to the anterior wall and the posterior wall across the distance between these two walls. EX1006, FIG. 2. EX1003, ¶ 212.

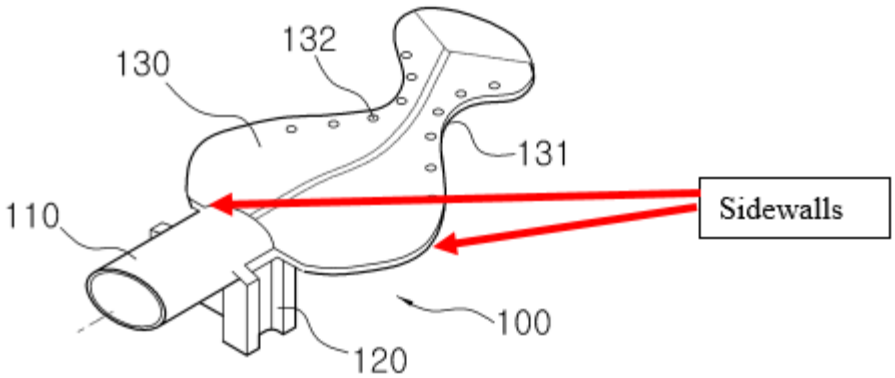

As discussed in Section IX.B.1.d, Park teaches that the first wall is spaced from the second wall to define an inner cavity. EX1003, ¶ 213.

h. **Limitation 1(h)**

Park also teaches that a first end of the tongue retractor 130 is wider than a second end. EX1006, FIGS. 2 and 3 (annotated below); EX1003, ¶ 214.

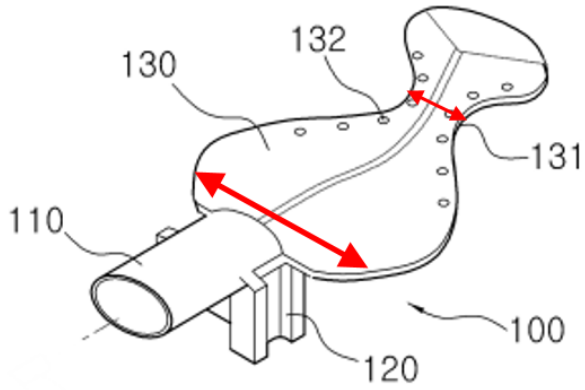

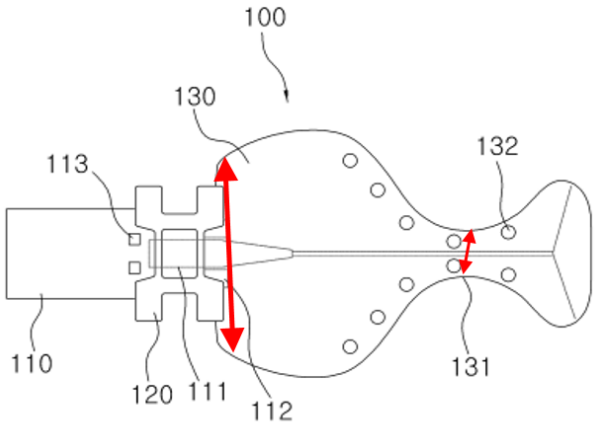

i. **Limitation 1(i)**

Park teaches an insertion port 110 extending from an end of the tongue retractor opposite the cheek retractor. EX1006, ¶¶ 26, 31. Park teaches that the insertion port 110 connects to a vacuum source to suction foreign material. EX1006 ¶¶ 26-28, 43; EX1003, ¶¶ 215. The insertion port 110 suctions through the suction ports 112 that extend into the inner chamber between the anterior wall and the superior wall explained above. *Id.*; *See* Section IX.C.1.d. Park discloses the insertion port 110 as hollow, thus teaching a suction connector that includes a cavity extending longitudinally from the main body portion and in communication with the interior chamber of the tongue retractor 130. EX1006 ¶¶ 26-28, FIG. 2; EX1003, ¶ 215. Once modified by Baughan and Johnson, the fluid channels formed between the projections would be in fluid communication with the insertion port 110 and the suction ports 112. EX1003, ¶ 215.

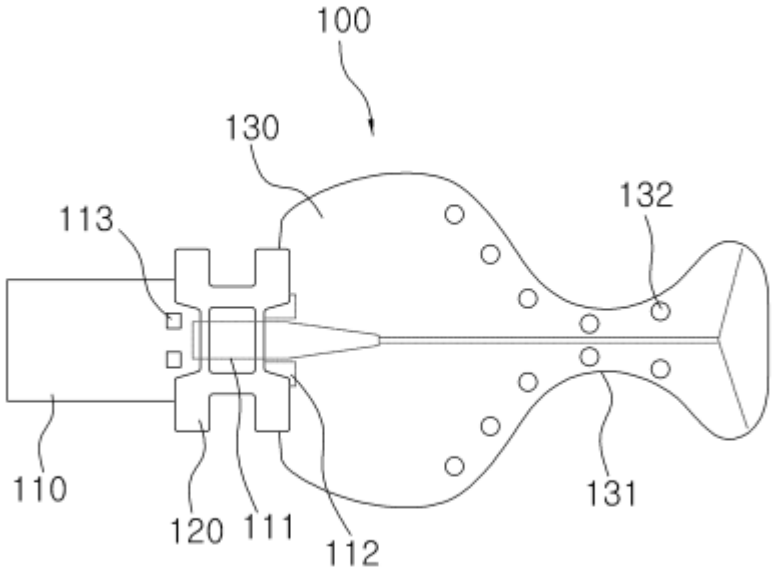

Park teaches a generally rectangular projection hole 113 that receives a locking projection 211 formed on the vacuum adapter 200. EX1006, ¶ 35. A PHOSITA would understand that these holes 113 create an interlocking fit with a projection on the vacuum adapter 200. EX1003, ¶ 215.

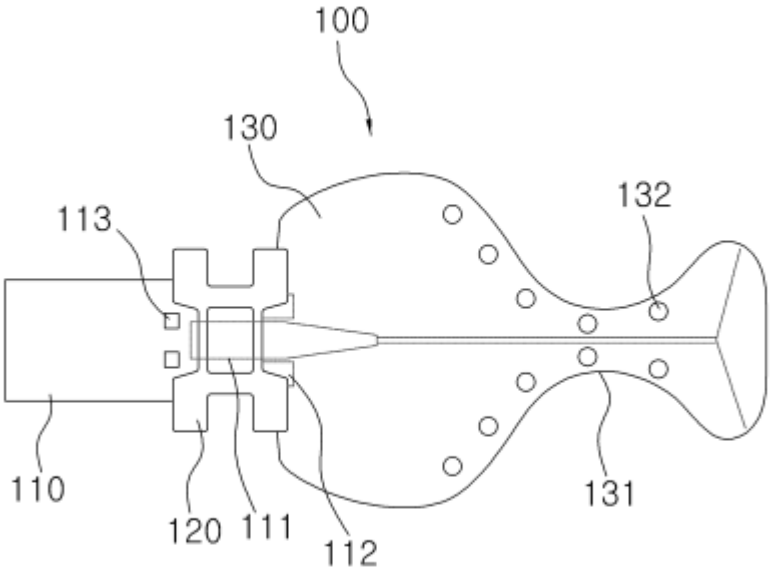

j. **Limitation 1(j)**

Park discloses a tooth support section 120 (mouth prop) having interlocking grooves formed on the upper and lower sides, allowing the patient's upper and lower teeth to interlock. EX1006, ¶ 29. Thus, Park teaches a mouth prop including a first and second side that each include a plurality of ridges. EX1003, ¶ 216-217. It’s not clear whether the first and second sides of the tooth support section 120 taper. However, it would have been obvious to a PHOSITA to make the tooth support section 120 (mouth prop) tapered in view of Hirsch.

This limitation requires a mouth prop that has a smaller posterior surface than the anterior surface. Almost all bite blocks are designed in this way. This design follows the natural shape of the mouth when it is open, because the jaw is a hinge,

which any PHOISTA would understand based on very basic dental anatomy. EX1003, ¶ 217.

Hirsch teaches a bite piece 250, and Hirsch illustrates that the bite block tapers. EX1012, ¶ 84, FIG. 19D; EX1003, ¶ 218.

Hirsch teaches tooth engaging ridges 520 and cross-shaped members 550 that "are biting surfaces that may be engaged by the bottom of the top teeth and the top of the bottom teeth to help keep the bite piece 250 in position." EX1012, ¶ 88; EX1003, ¶ 219. Therefore, Hirsch also teaches a plurality of ridges formed on the bite piece 250.

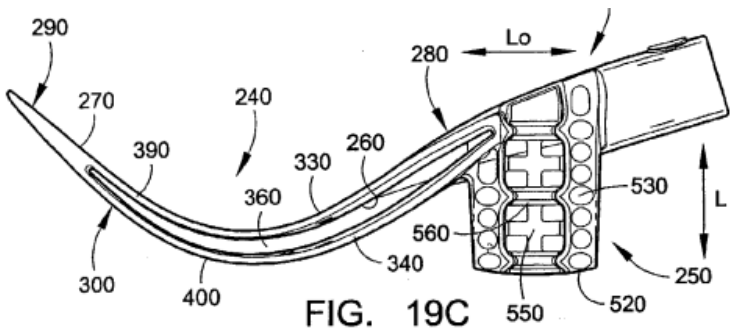

FIG. 19C

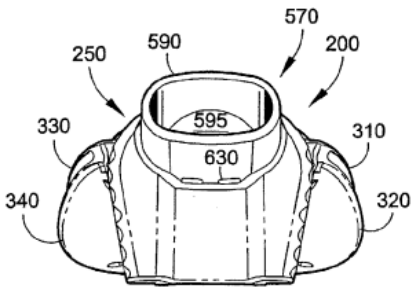

FIG. 19D

It would have been obvious to a PHOSITA to modify the tooth support section 120 to be tapered like the bite piece 250 of Hirsch because a tapered shape better accommodates a patient's mouth in the open position leading to increased patient comfort. EX1012, ¶¶ 85-88; EX1005, 11:61-12:9, 4:47-55; EX1003, ¶ 219. A PHOSITA would have expected success in making the mouth prop tapered because

such a shape would confirm to dental anatomy, and such a change would only be a change in shape, which is obvious. MPEP 2144.04(IV)(B)

k. **Limitation 1(k)**

Park also illustrates that the first and second ends of the check retractor each have rounded edges. EX1006, FIG. 3. EX1003, ¶ 220.

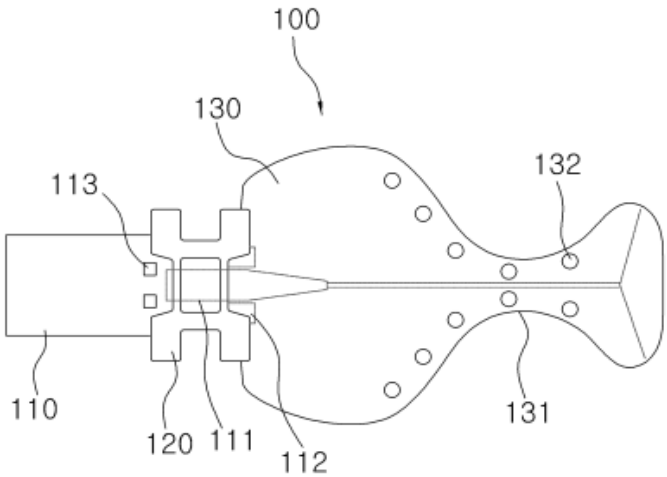

Therefore, Park in view of Baughan and Johnson teaches each and every limitation of claim 1.

2. **Claim 2**

Park's first and second pluralities of perforations on the posterior and/or anterior wall each have 6 perforations, thus fulfilling this limitation. EX1006, FIG. 2; EX1003, ¶ 221.

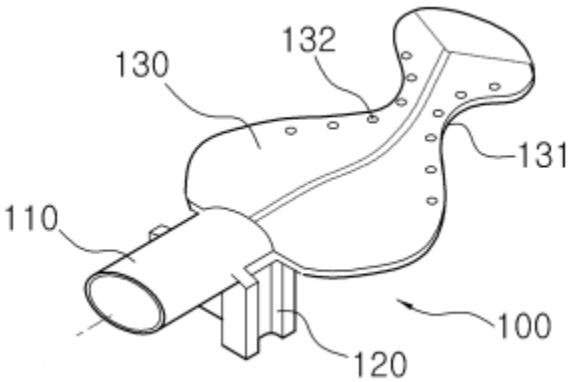

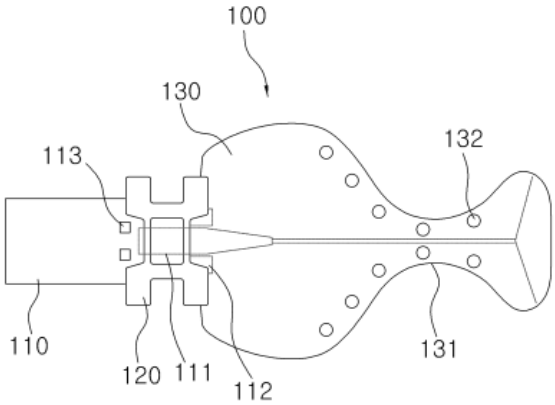

3. **Claim 3**

Park illustrates holes 132 in concave section 131. EX1002, FIG. 2; EX1003, ¶ 222.

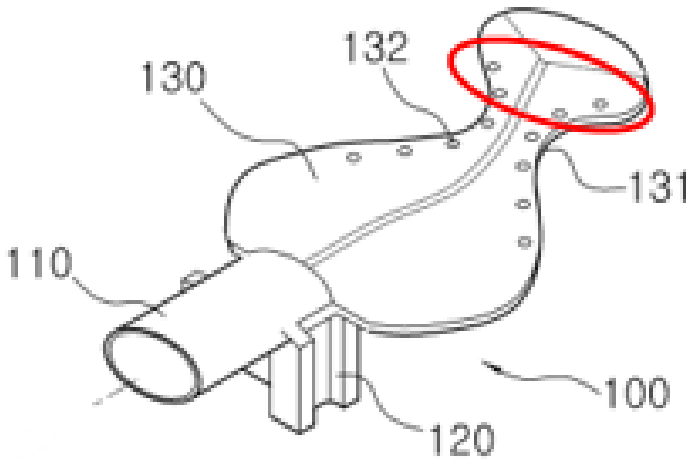

4. **Claim 4**

Park teaches that the concave section 131 (narrower second end) connects to a cheek retractor, which is formed to the right of the concave section and expands

outwardly away from the second narrower end. EX1006, ¶ 31, FIGS. 1-3; EX1003, ¶ 223.

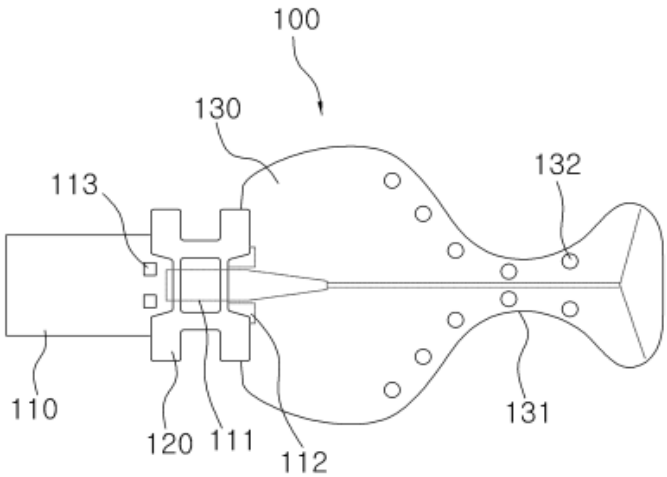

As discussed in Section IX.C.1.d, Park teaches two walls separated from each other to form an inner cavity anywhere holes 132 exist. EX1003, ¶ 223-224. FIG. 2 shows holes 132 are present right up until the two lines that form a "Y-shape" near the end of the mouth prop, which means that the first and second walls that transition into the cheek retractor portion remain separated for a distance within the cheek retractor portion. Past the "Y-shaped" lines, the first wall connects to the second wall, such that they are no longer separated. *Id.*

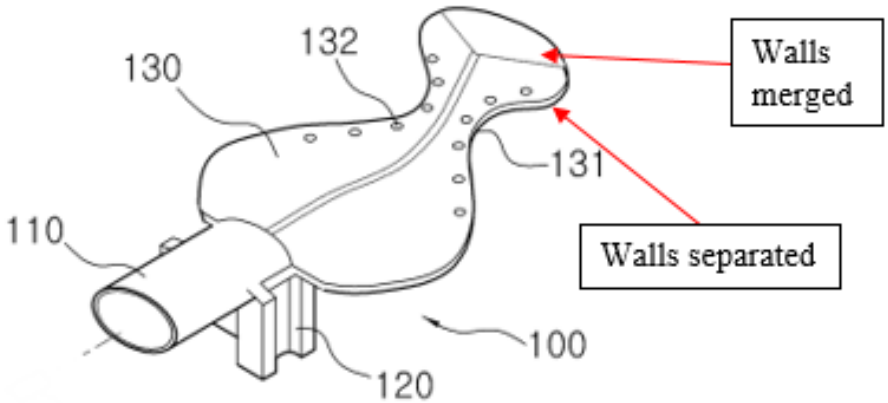

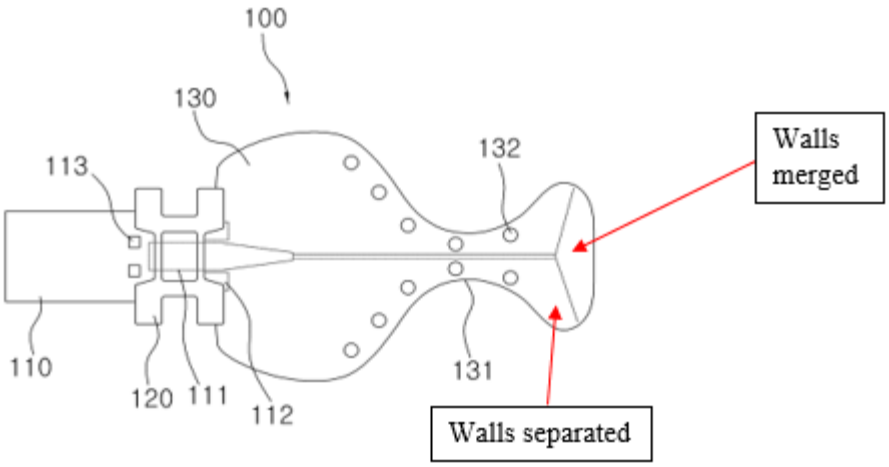

Additionally, Park's design is basically identical to the cheek retractor that Patent Owner appears to assert as infringing this limitation. *Id*.

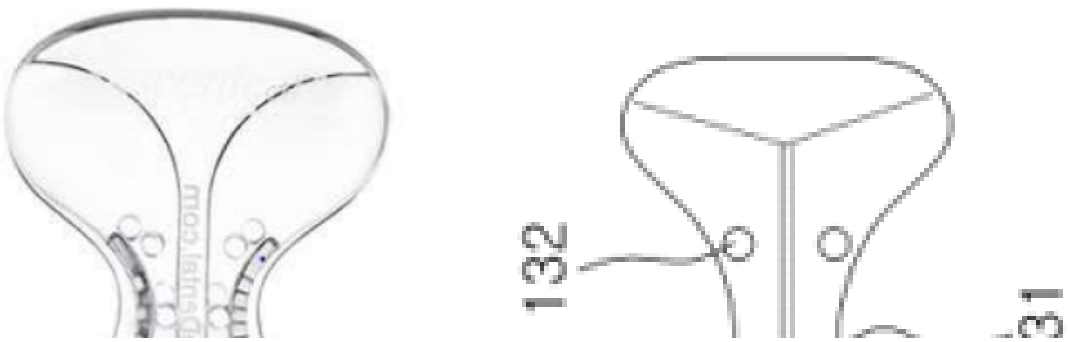

Therefore, Park in view of Baughan and Johnson teaches each and every limitation of claim 4.

5. **Claim 5**

See Section IX.C.3; EX1003, ¶ 225.

6. **Claim 6**

Park teaches a generally rectangular projection hole 113 that receives a locking projection 211 formed on the vacuum adapter 200. EX1006, ¶ 35. Changing the projection hole 113 from rectangular to a shield shape is obvious. MPEP 2144.04(IV)(B); EX1003, ¶¶ 226-227.

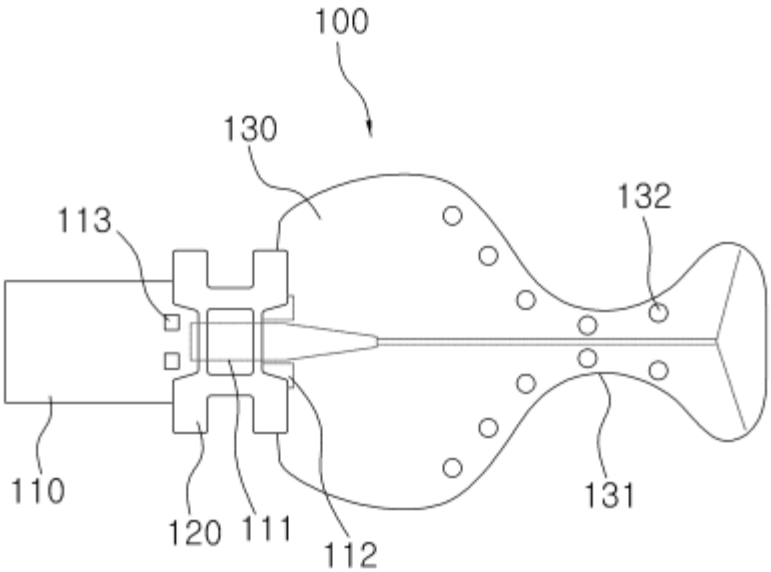

7. **Claim 7**

Park teaches a generally rectangular projection hole 113 that receives a locking projection 211 formed on the vacuum adapter 200. EX1006, ¶ 35. Changing

the projection hole 113 from rectangular to a triangular shape is obvious. MPEP 2144.04(IV)(B); EX1003, ¶ 228.

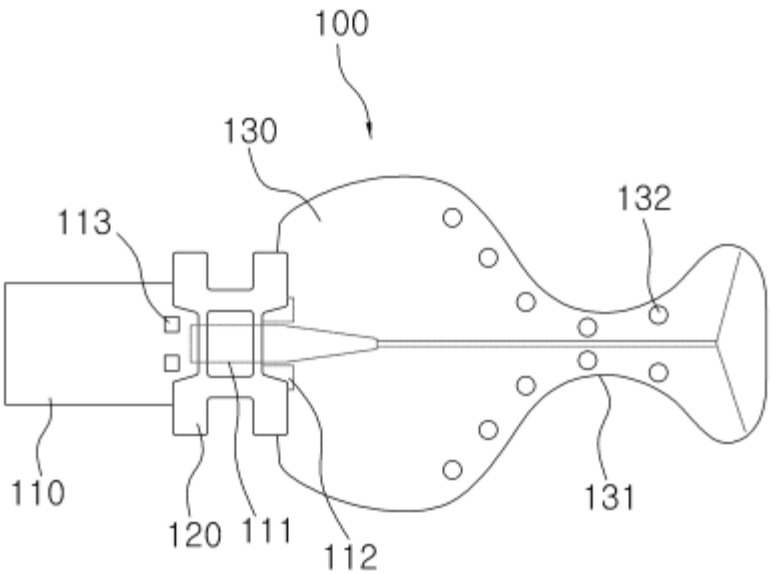

8. **Claim 8**

Park depicts a line running down the longitudinal axis of the mouth prop 100. EX1006, FIGs. 2-3. Park fails to expressly teach what this line is or how it functions. Park implies that this line likely assists in light transmission, especially considering that the light socket 111 is formed at one end of the line. EX1006, ¶ 39; EX1003, ¶ 229.

It was well known before the priority date of the ’418 Patent to include a spine in a dental isolation mouthpiece. EX1003, ¶ 230. For example, Hirsch teaches a

dental isolation mouthpiece with a spine 365 running down a longitudinal axis of the mouthpiece.

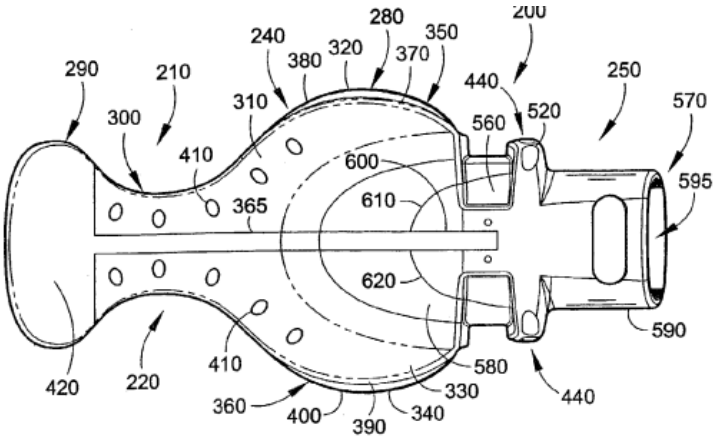

FIG. 19A

Hirsch teaches that the spine protrudes from an interior surface of the posterior wall and extends at least partially through the cheek retractor along a longitudinal axis. EX1012, ¶ 78. Hirsch teaches that this spine 365 assists in dispersing light in the oral cavity – a goal that Hirsch and Park share. EX1006, Abstract; EX1012, ¶ 78. The additional benefit of the spine would be additional rigidity and resiliency, particularly where gums/ridges engage the concave portion 131. EX1003, ¶¶ 231-232. Thus, a PHOSITA would have been motivated to include the spine of Hirsch to the mouthpiece of Park to increase rigidity and help disperse light across the entire mouthpiece. *Id*. The increased rigidity would also help retract cheek tissue. EX1005, 7:21-39; EX1003, ¶ 231.

A PHOSITA would have expected success in adding the spine to the mouthpiece of Park, especially considering that both mouthpieces perform the same

function and have very similar designs (Hirsch simply lacks sidewalls). EX1003, ¶ 232. Moreover, the addition of the spine would help prevent collapse of the top wall and bottom wall under suction. *Id*. The combination of the spine and the projections would prevent collapse at all weak areas of the mouth prop 100. *Id*. Finally, Park already envisioned two suction ports 112, so the addition of a dividing spine would not affect the ability to suction from all parts of the mouth prop 100. *Id*.

Hirsch further discloses that the spine 365 is located along a center of the first wall at least adjacent to the second narrow end of the main body. EX1012, FIG. 19A.

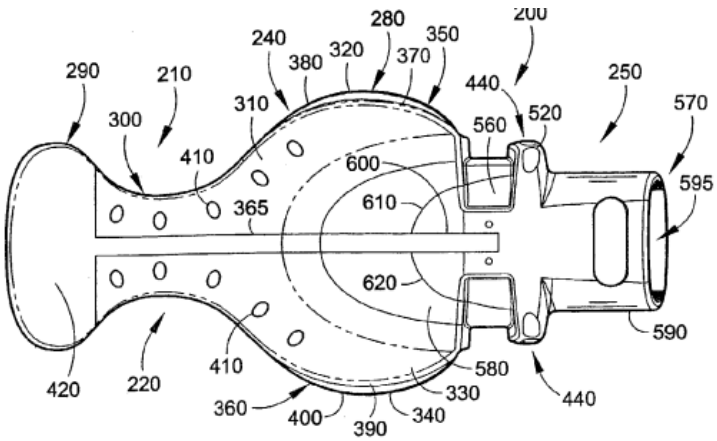

FIG. 19A

As shown in both Park and Hirsch, at least one of the first plurality of perforations is positioned on one side of the spine and the at least one of the second plurality of perforations is positioned on another side of the stability bar. EX1012, FIG. 19A. EX1006, FIG. 3; EX1003, ¶¶ 233-234.

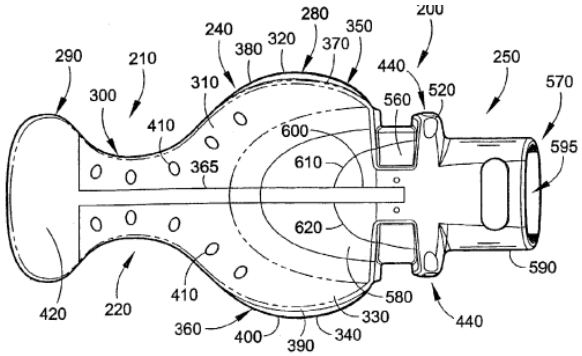

FIG. 19A

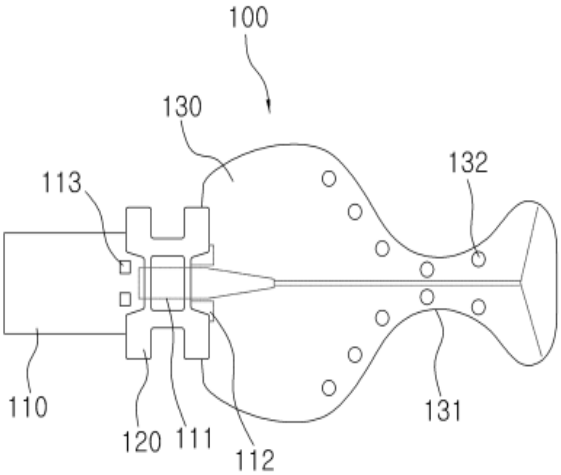

9. **Claim 9**

See Section IX.C.8; EX1003, ¶ 235.

10. **Independent Claim 11**

a. **Limitation 11(a)**

See Section IX.C.1.a; EX1003, ¶ 236.

b. **Limitation 11(b)**

See Section IX.C.1.b; EX1003, ¶ 237.

c. **Limitation 11(c)**

See Section IX.C.1.c; EX1003, ¶ 238.

d. **Limitation 11(d)**

See Section IX.C.1.d; EX1003, ¶ 239.

e. **Limitation 11(e)**

See Section IX.C.1.e; EX1003, ¶ 240.

f. **Limitation 11(f)**

See Section IX.C.1.g; EX1003, ¶ 241.

g. **Limitation 11(g)**

See Section IX.C.1.h; EX1003, ¶ 242.

h. **Limitation 11(h)**

See Section IX.C.1.i; EX1003, ¶ 243.

i. **Limitation 11(i)**

See Section IX.C.1.j; EX1003, ¶ 244.

j. **Limitation 11(j)**

See Section IX.C.4; EX1003, ¶ 245.

11. **Claim 12**

See Section IX.C.1.i; EX1003, ¶ 246.

12. **Claim 13**

See Section IX.C.2; EX1003, ¶ 247.

13. **Claim 14**

See Section IX.C.3; EX1003, ¶ 248.

14. **Claim 15**

See Section IX.C.1.f; EX1003, ¶ 249.

15. **Claim 16**

See Section IX.C.8; EX1003, ¶ 250.

16. **Claim 17**

See Section IX.C.9; EX1003, ¶ 251.

17. **Claim 23**

See Section IX.C.8; EX1003, ¶ 252.

D. **Ground 4: Claims 19 is obvious under 35 U.S.C. 103 in view of Park, Baughan, Johnson, and Hirsch.**

Park does not disclose whether the insertion port 110 has a different thickness than the anterior or posterior walls. However, it would have been obvious to a PHOSITA to make the insertion port thicker than the anterior or posterior wall in view of Black. EX1003, ¶¶ 254-255.

Black discloses a tongue shield aspirator 440 including anterior and posterior layers 448a, 448(b) and a neck 446. EX1005, 16:15-49; EX1003, ¶¶ 254-255. FIG. 24D shows that the neck 446 (suction connector) is far thicker than the anterior and posterior layers 448a, 448b. *Id*.

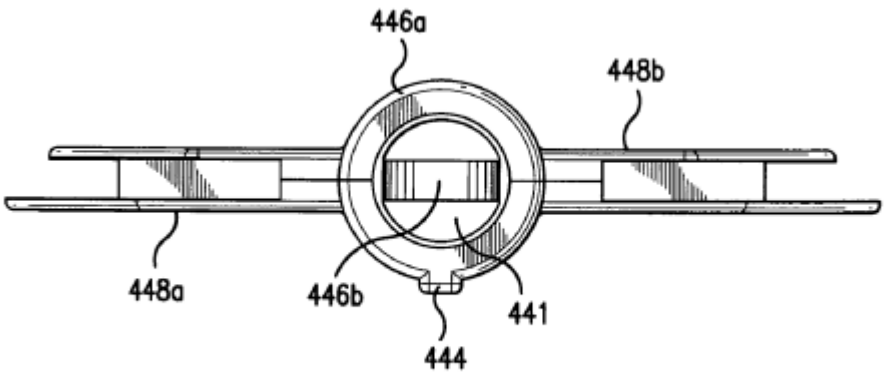

FIG.24D

It would be immediately obvious to a PHOSITA to modify the insertion port 110 of Park to be thicker, like the neck 446 of Black, because the neck forms a connection with an evacuation tube, which should be strong and unlikely to break. EX1003, ¶ 255. Additionally, the neck is not inside the patient's mouth, so there is less of a patient comfort need in making the insertion port 110 soft. EX1005, 4:47-55. Such a change is also simply a change in size or proportion. MPEP 2144.04(IV)(A).

E. Ground 5: Claims 1–9, 11–17 and 19 are obvious under 35 U.S.C. 103 in view of Black, Hirsch, and Zheng.

To the extent that the Board does not agree that Black teaches two walls that are separated for a short distance in the cheek retractor before merging together to form the cheek retractor, it would have obvious to modify the mouthpiece to do so in view of Zheng. EX1021, FIG. 2; EX1003 ¶ 256. It would be obvious to do so to improve suction near the cheek retractor. All other arguments remain the same as Ground 1.

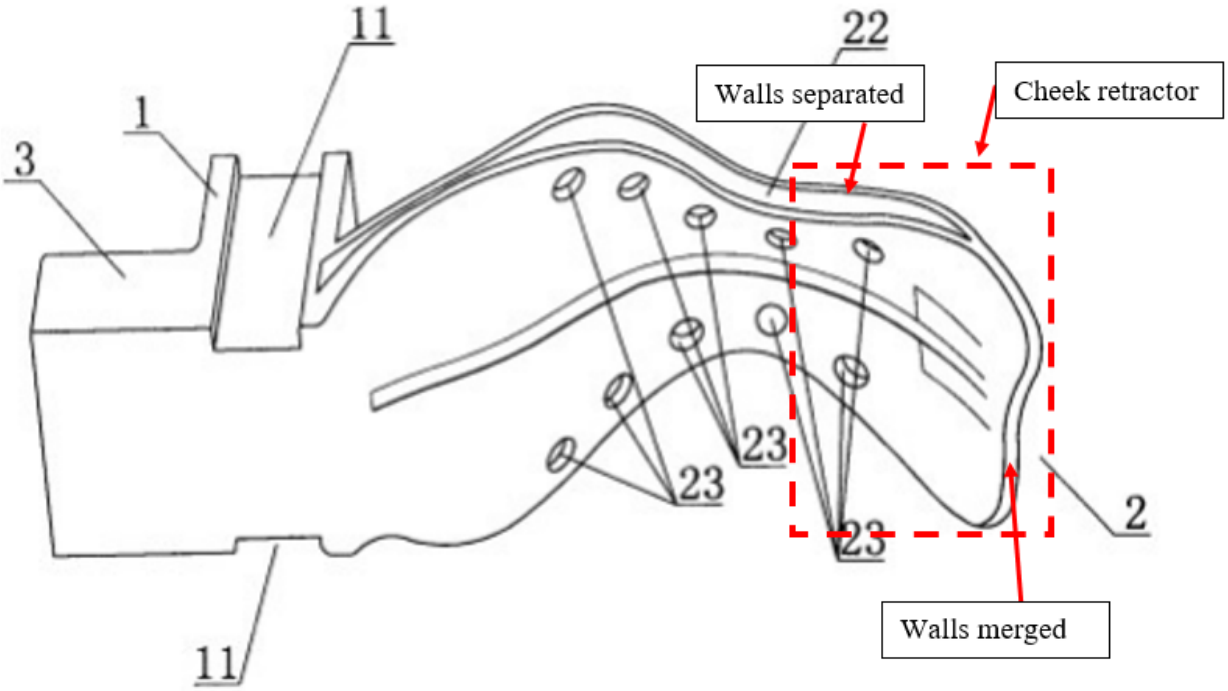

F. **Grounds 6-7: Claims 1–9, 11–17, and 20–28 are obvious under 35 U.S.C. 103 in view of Park, Baughan, Johnson, Hirsch, and Zheng. Claim 19 is obvious under 35 U.S.C. 103 in view of Park, Baughan, Johnson, Hirsch, Black, and Zheng.**

To the extent that the Board does not agree that Park teaches two walls that are separated for a short distance in the cheek retractor before merging together to form the cheek retractor, it would have obvious to modify the mouthpiece to do so in view of Zheng. EX1021, FIG. 2; EX1003, ¶ 257. It would obvious to do so to improve suction near the cheek retractor. All other arguments remain the same as Grounds 3-4.

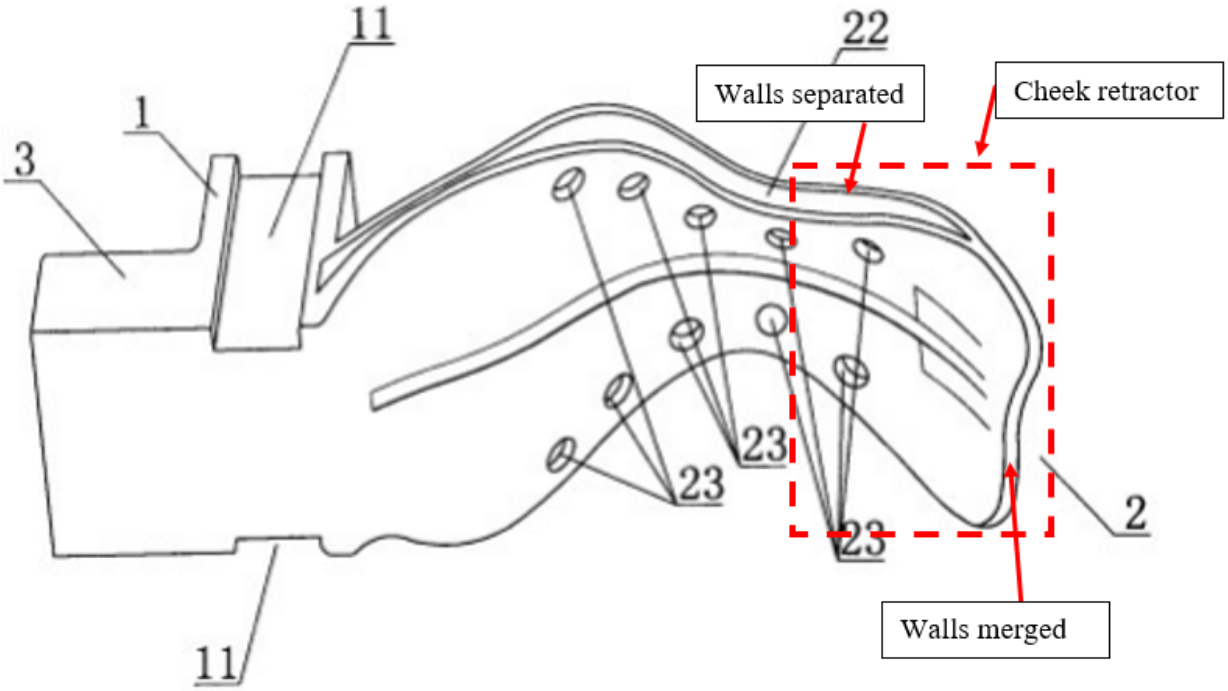

X. CONCLUSION

Petitioner has demonstrated in this Petition that claims 1–9, 11-17, and 19–28 of the ’418 Patent are unpatentable. Petitioner, therefore, respectfully requests institution of an *inter partes* review of the ’418 Patent and that claims 1–9, 11–17, and 19–28 be canceled.

Respectfully submitted,

Dated: June 24, 2025

By: /Nathan P. Sportel/

Nathan P. Sportel, Reg. No: 67,980
Brandon Griffith, Reg. No: 74,934
Jacob Cowdrey, Reg. No: 81,803
MILLER JOHNSON
45 Ottawa Ave SW, Suite 1100
Grand Rapids, MI 49503
(616) 831-1793 Telephone
(616) 831-1505 Facsimile
sporteln@millerjohnson.com

griffithb@millerjohnson.com

Attorneys for Petitioner
Ascentcare Dental Products, Inc.

CERTIFICATION

The Petition excluding the caption, Table of Contents, Table of Exhibits, Mandatory Notices under 37 C.F.R. § 42.8, and this Certification contains 11,277 words.

Respectfully submitted,

Dated: June 24, 2025

By: /Nathan P. Sportel/
Nathan P. Sportel
Reg No. 67,980
Lead Counsel for Petitioner

CERTIFICATE OF SERVICE

I hereby certify that on this the 24th day of June 2025, the foregoing Petition for *inter partes* review and all exhibits and other documents filed together with the Petition were served electronically to the attorneys of record for the ’418 Patent at the following address:

POLSINELLI LLP
PO Box 140310, Kansas City, MO, United States.

Angelo Christopher, achristopher@nixonpeabody.com
Daniel Burnham, dburnham@nixonpeabody.com
NIXON PEABODY
70 West Madison St., Suite 5200, Chicago, IL 60602

Respectfully submitted,

By: /Nathan P. Sportel/
Nathan P. Sportel
Reg No. 67,980
Lead Counsel for Petitioner