US006974321B2

(12) **United States Patent**
Hirsch et al.

(10) **Patent No.: US 6,974,321 B2**
(45) **Date of Patent: Dec. 13, 2005**

(54) **INTRAORAL DEVICE**

(75) Inventors: **James A. Hirsch**, Santa Barbara, CA (US); **Thomas R. Hirsch**, Malibu, CA (US)

(73) Assignee: **Innerlite, Inc.**, Santa Barbara, CA (US)

(*) Notice: Subject to any disclaimer, the term of this patent is extended or adjusted under 35 U.S.C. 154(b) by 104 days.

(21) Appl. No.: **10/375,230**

(22) Filed: **Feb. 27, 2003**

(65) **Prior Publication Data**

US 2003/0134253 A1 Jul. 17, 2003

Related U.S. Application Data

(63) Continuation-in-part of application No. 10/006,732, filed on Nov. 15, 2001, now Pat. No. 6,575,746, which is a continuation of application No. 09/777,491, filed on Feb. 5, 2001, now Pat. No. 6,338,627, which is a continuation of application No. 09/490,923, filed on Jan. 25, 2000, now abandoned, which is a continuation of application No. 09/193,916, filed on Nov. 17, 1998, now Pat. No. 6,022,214.

(51) **Int. Cl.**[7] **A61C 17/06**
(52) **U.S. Cl.** **433/93**; 433/140
(58) **Field of Search** 433/29, 91, 93, 433/140

(56) **References Cited**

U.S. PATENT DOCUMENTS

1,122,086 A 12/1914 Dunlap
2,510,125 A * 6/1950 Meakin 174/47
3,881,254 A 5/1975 Epsteen
4,167,814 A 9/1979 Schubert
4,259,067 A 3/1981 Nelson
4,495,945 A 1/1985 Liegner
4,592,344 A 6/1986 Scheer
4,643,172 A 2/1987 Taff et al.
4,802,851 A 2/1989 Rhoades
4,865,545 A 9/1989 La Rocca
4,975,057 A 12/1990 Dyfvermark
4,992,046 A 2/1991 Sharp
4,996,976 A 3/1991 Nakagawa
5,009,595 A 4/1991 Osborn
5,071,347 A 12/1991 McGuire
5,078,602 A 1/1992 Honoshoesky

(Continued)

Primary Examiner—Ralph A. Lewis
(74) *Attorney, Agent, or Firm*—Stephen C. Beuerle; Procopio Cory Hargreaves & Savitch LLP

(57) **ABSTRACT**

An intraoral device includes a one-piece, flexible, injection molded body made of a single homogeneous material. The body includes upper front and rear flaps, and lower front and rear flaps. Upper edges of the front flaps and lower edges of the lower flaps are sealed by respective upper and lower parts of a patient's mouth to form upper and lower evacuation channels when the body is disposed within the patient's mouth. Evacuation holes in the flaps are in communication with the evacuation channels. A connection section is in communication with the evacuation channels and is configured to extend outside of the patient's mouth to connect with a vacuum source for evacuating fluid from the patient's mouth through the evacuation holes and the evacuation channels.

13 Claims, 12 Drawing Sheets

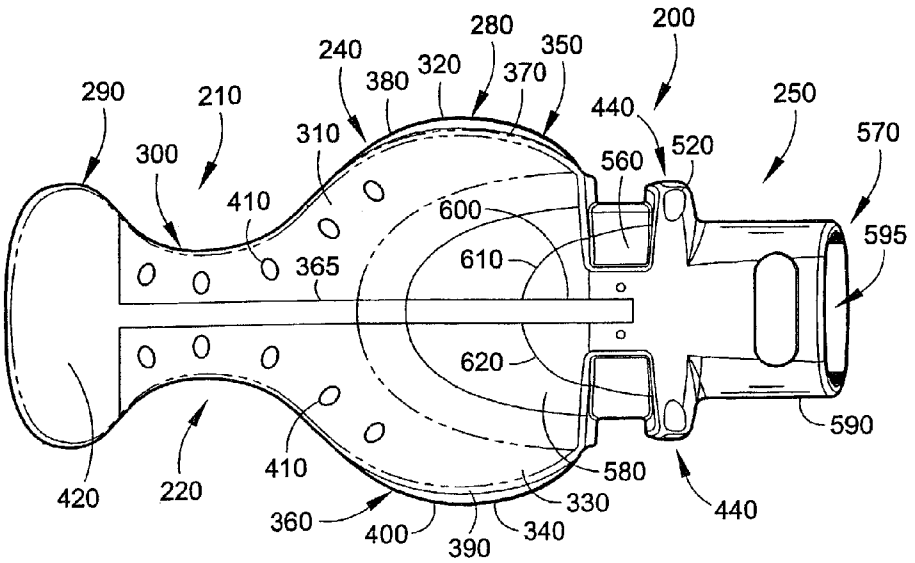

EX1021
Petitioner Ascentcare ('217 Patent)

U.S. PATENT DOCUMENTS

5,152,686	A	10/1992	Duggan et al.
5,232,362	A	8/1993	Kanas
5,281,134	A	1/1994	Schultz
5,462,435	A	10/1995	Young
5,513,986	A	5/1996	Feltham et al.
5,588,836	A	12/1996	Landis et al.
5,762,496	A	6/1998	Albertsson et al.
5,769,635	A	6/1998	Eldreth
5,873,718	A	2/1999	Sullivan
6,022,214	A	2/2000	Hirsch et al.
6,338,627	B2	1/2002	Hirsch et al.
6,575,746	B2 *	6/2003	Hirsch et al. 433/93

* cited by examiner

FIG. 1

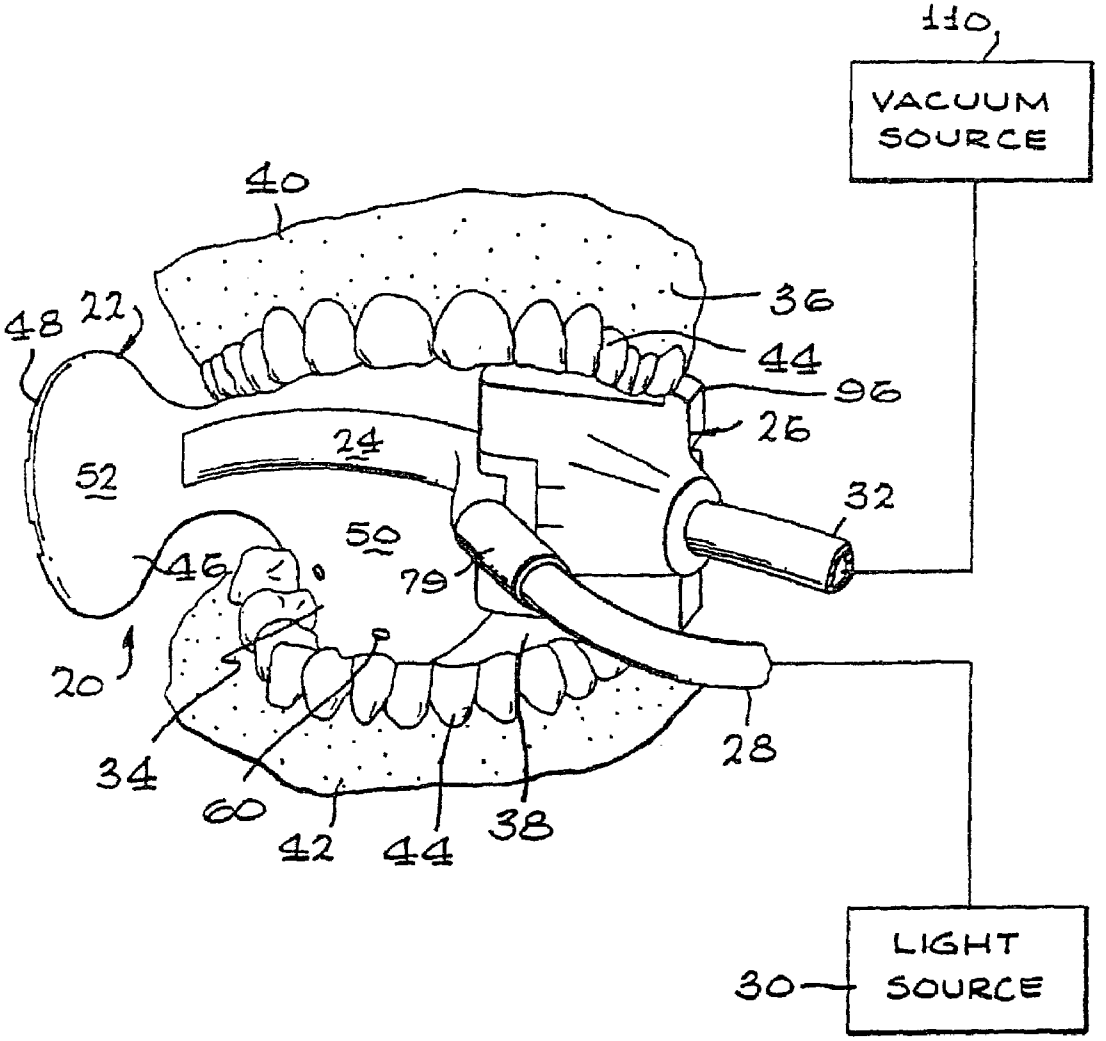
110
VACUUM SOURCE
40
36
48
22
44
96
26
24
52
32
50
46
79
20
34
28
60
42
44
38
LIGHT SOURCE
30

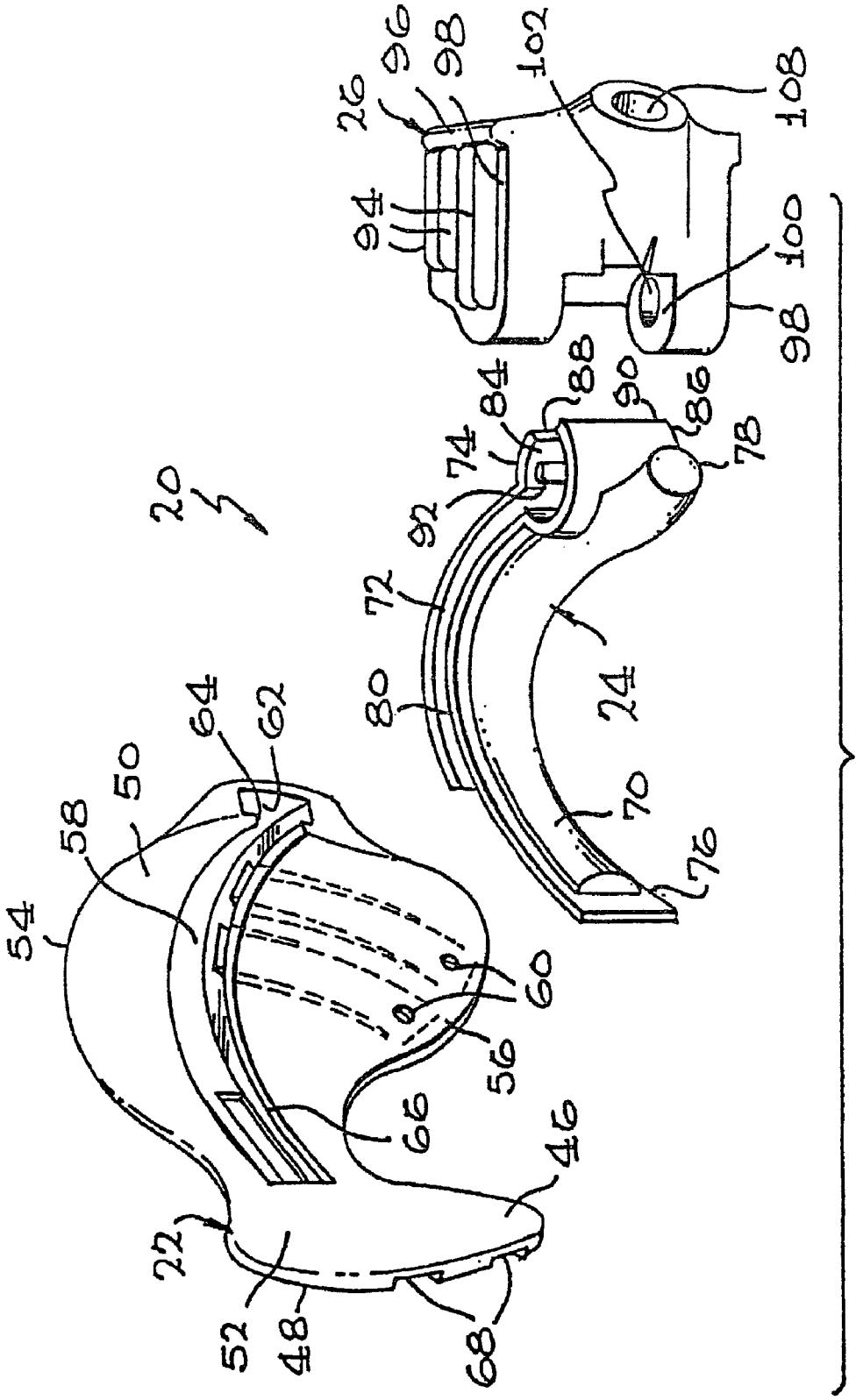
20
22
24
26
46
48
50
52
54
56
58
60
62
64
66
68
70
72
74
76
78
80
84
86
88
90
92
94
96
98
100
102
108

FIG. 2

FIG. 3

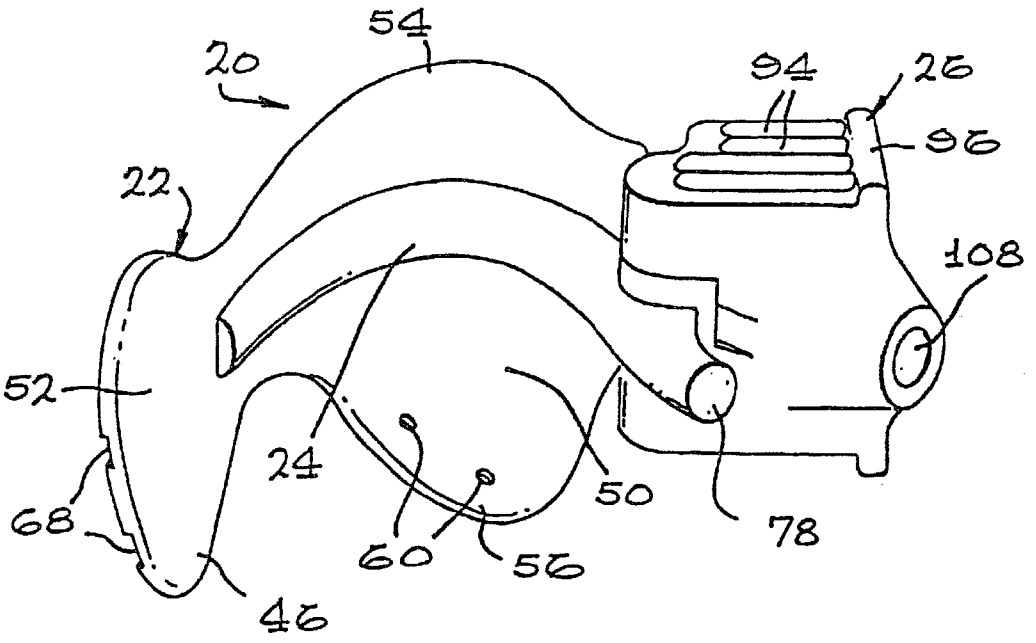
54
20
94
26
96
22
108
52
24
50
68
60
56
78
46

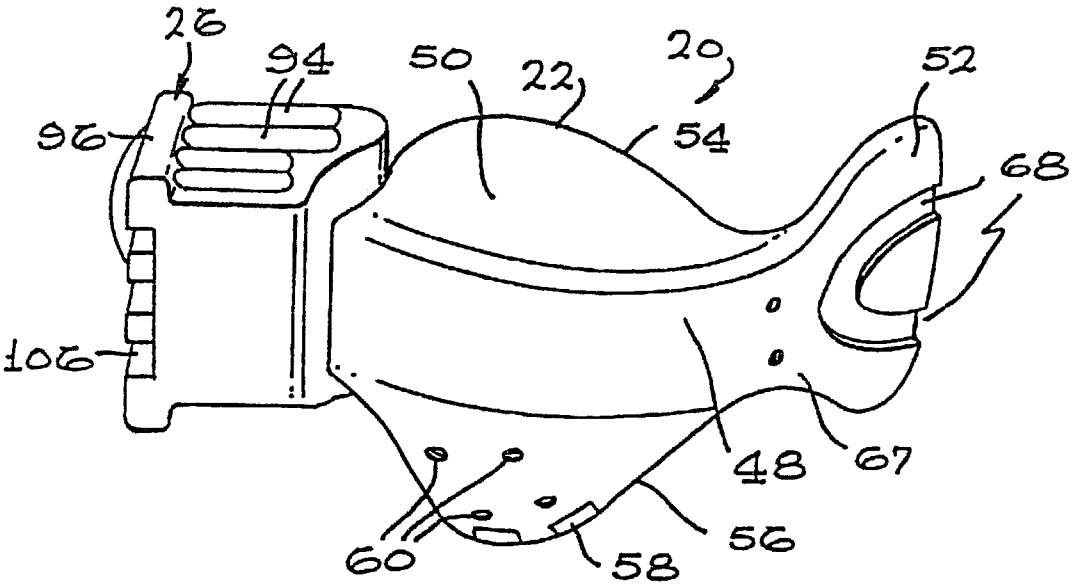
26
94
50
22
20
52
96
54
68
106
48
67
60
58
56

FIG. 4

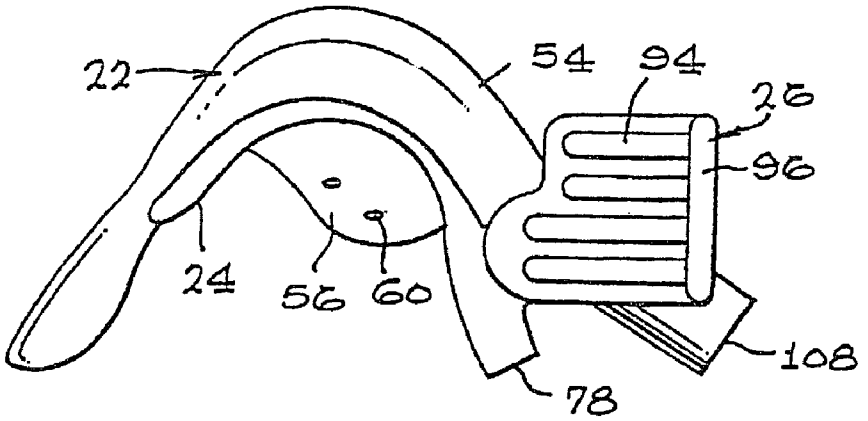

FIG. 5

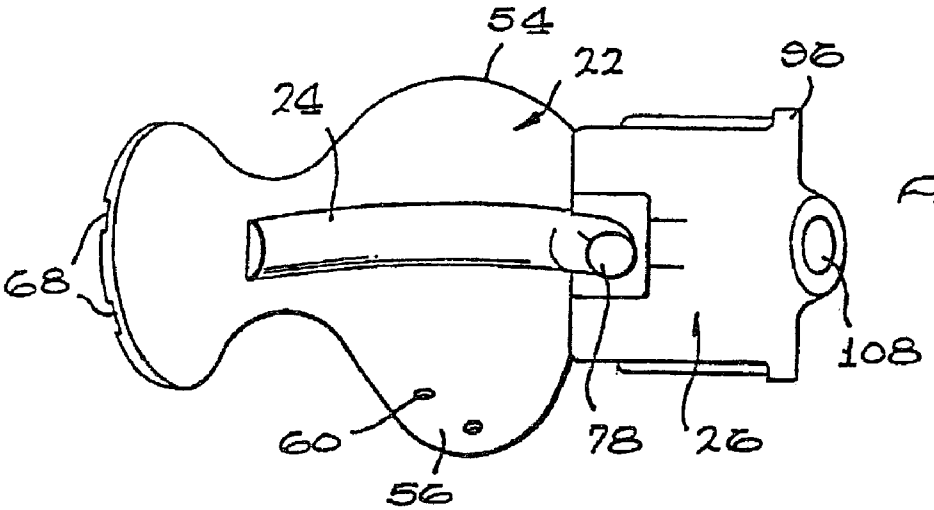

FIG. 6

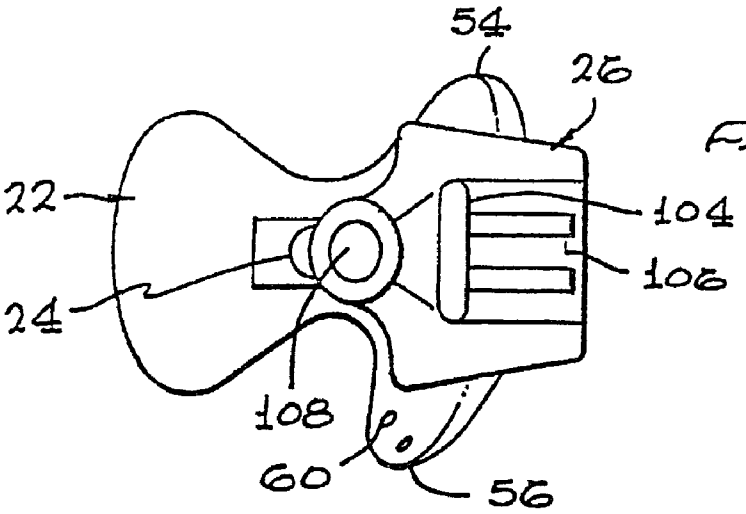

FIG. 7

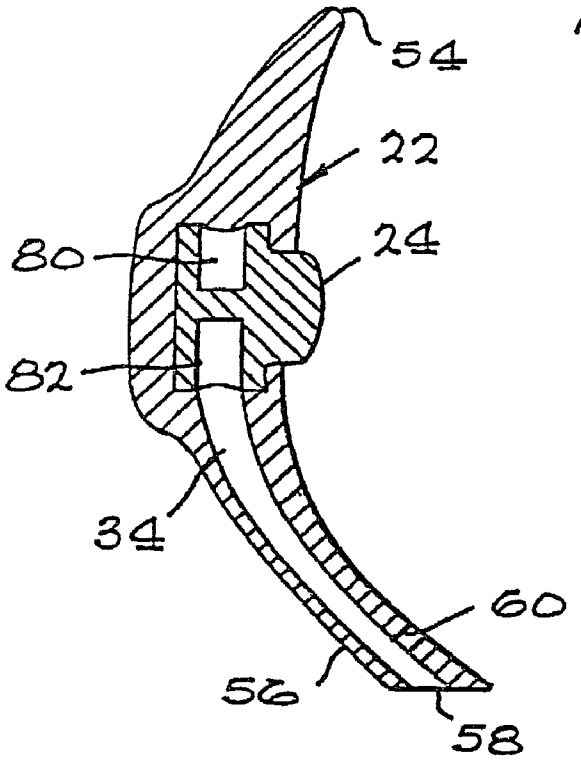

FIG. 8A

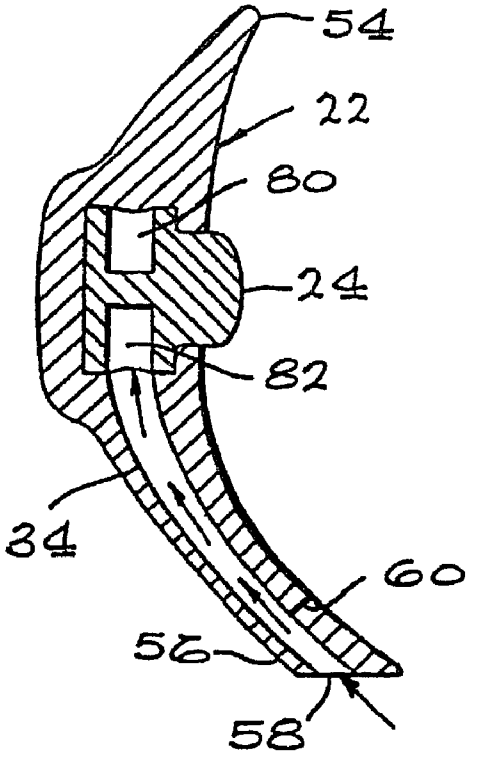

FIG. 8B

FIG. 9

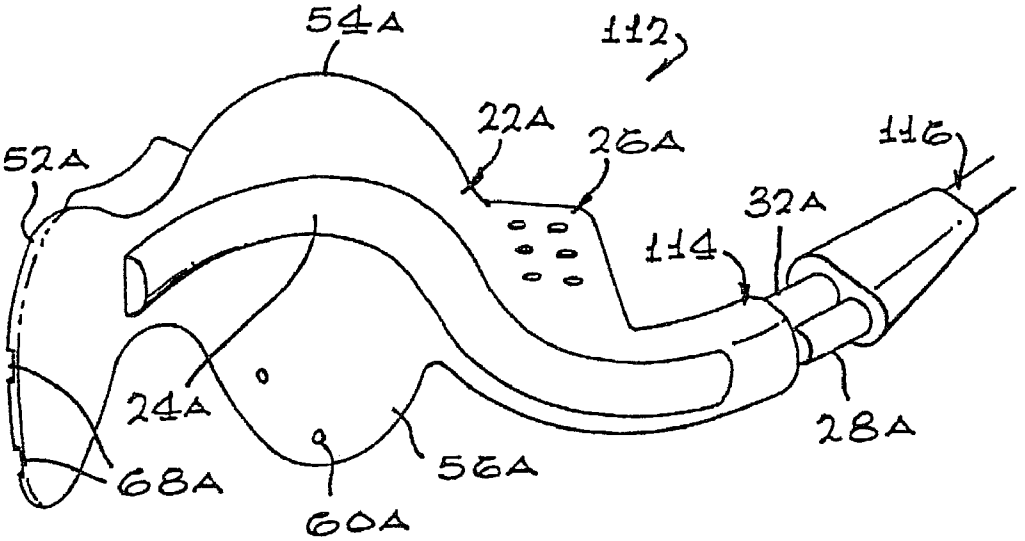

FIG. 10

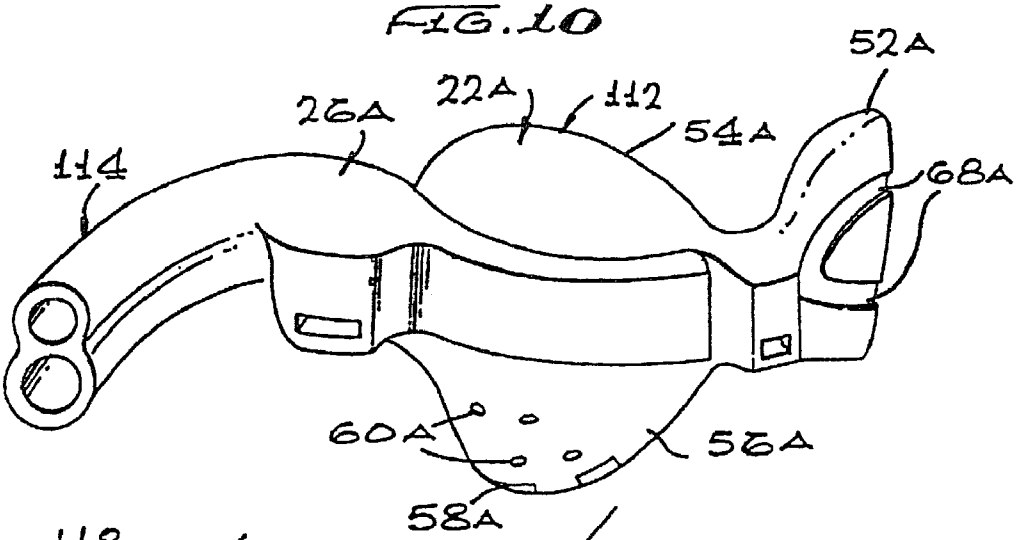

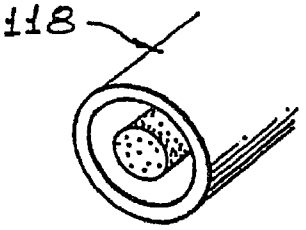

FIG. 11A

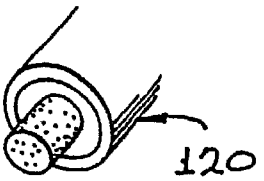

FIG. 11B

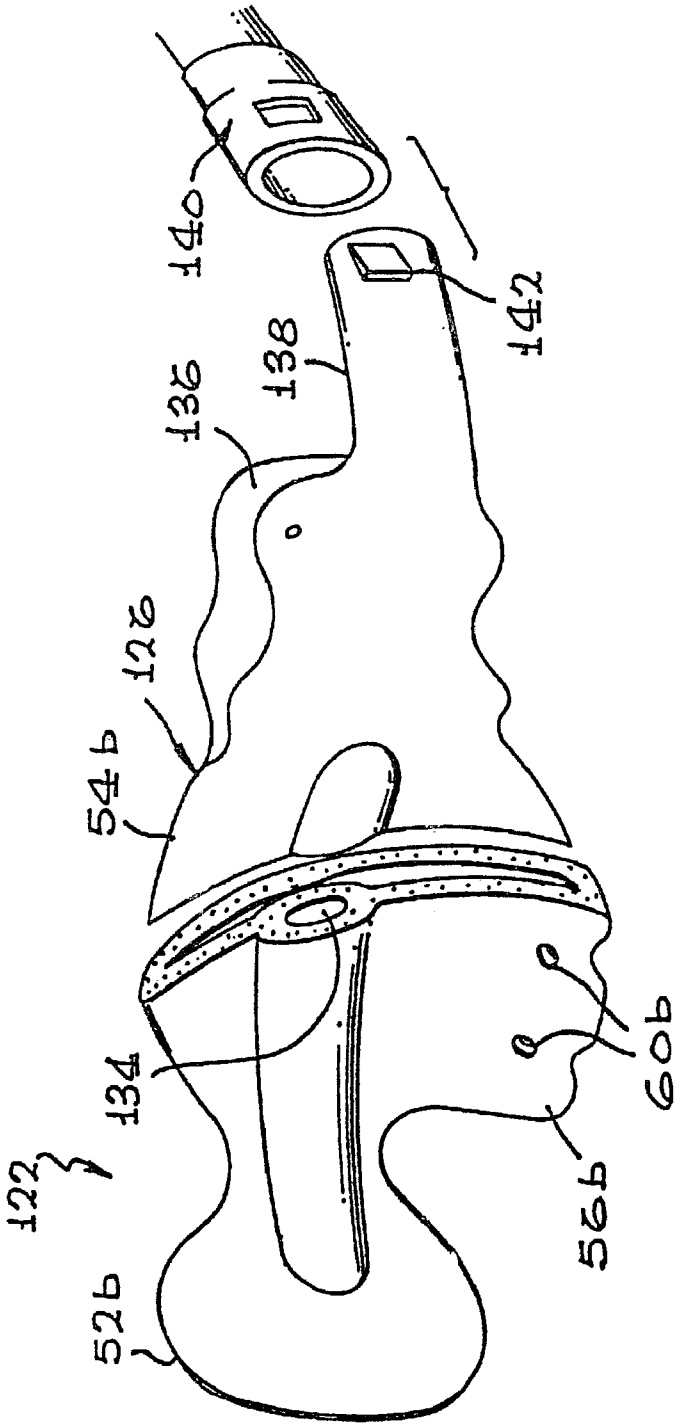

FIG. 12

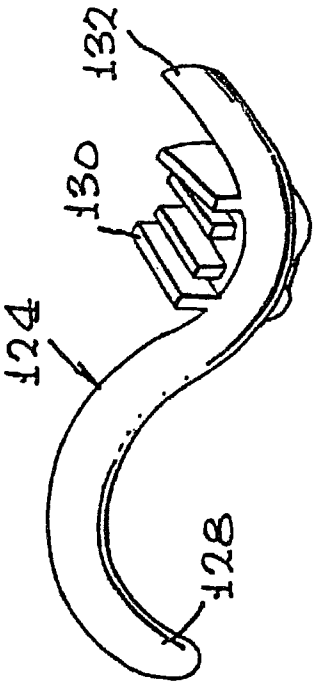

FIG. 13

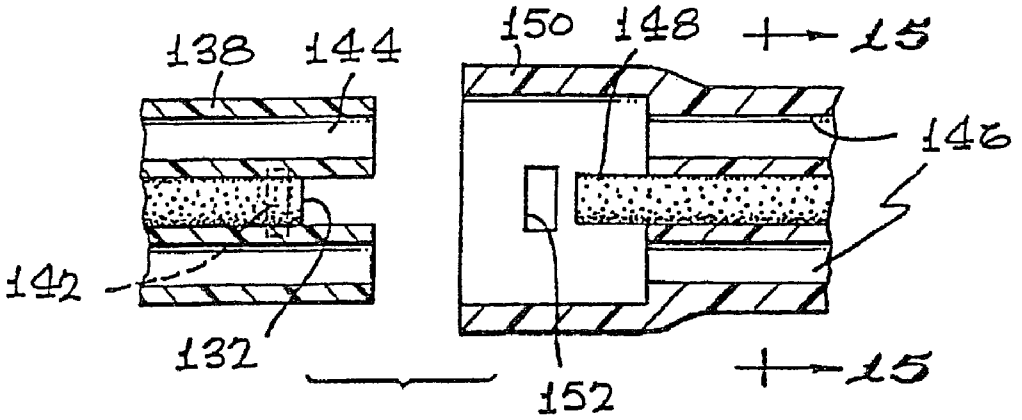

FIG. 14

FIG. 15

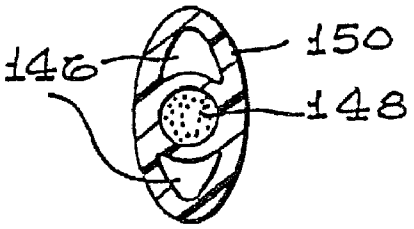

FIG. 16

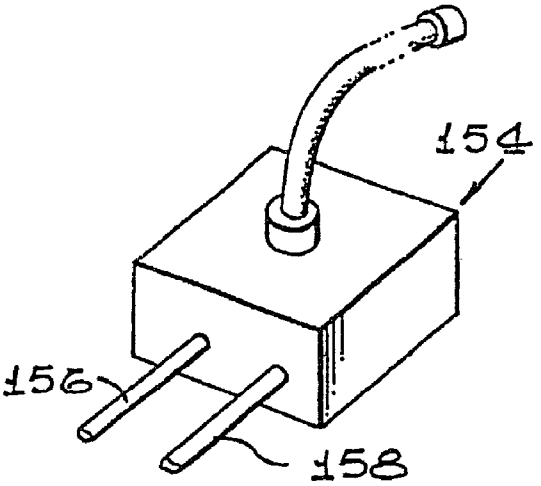

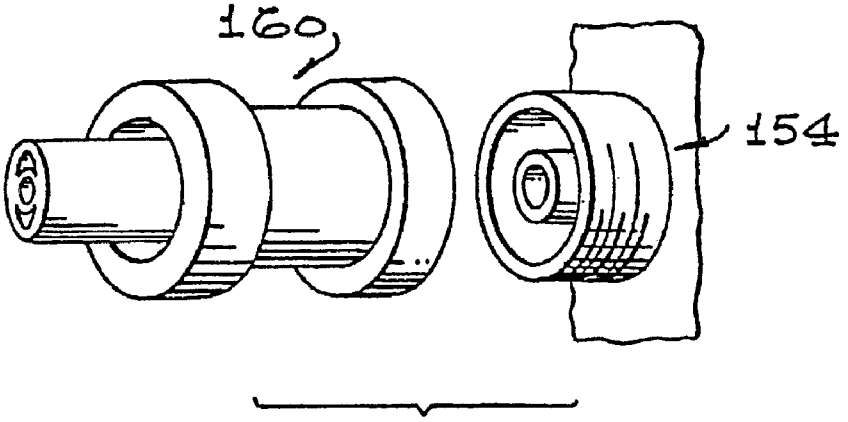

FIG. 17

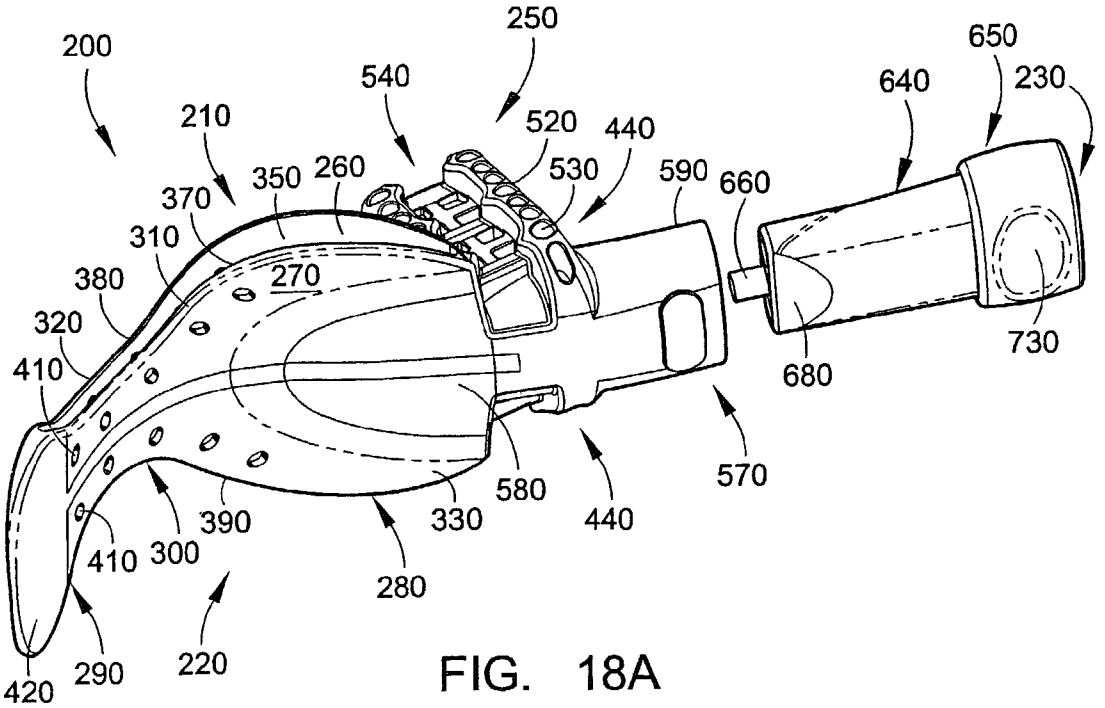

FIG. 18A

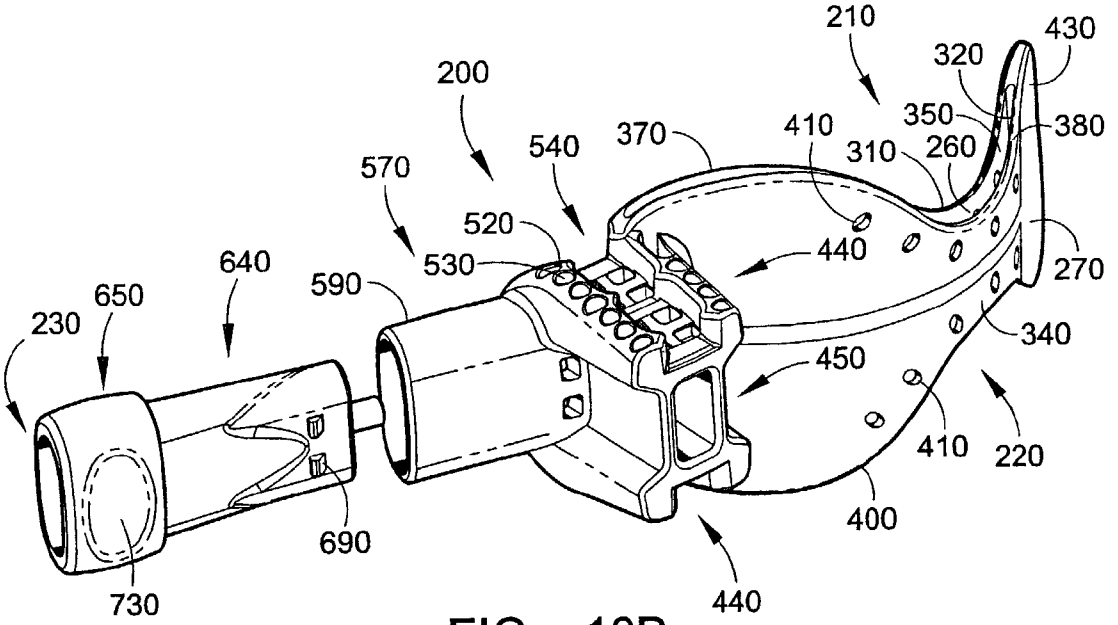

FIG. 18B

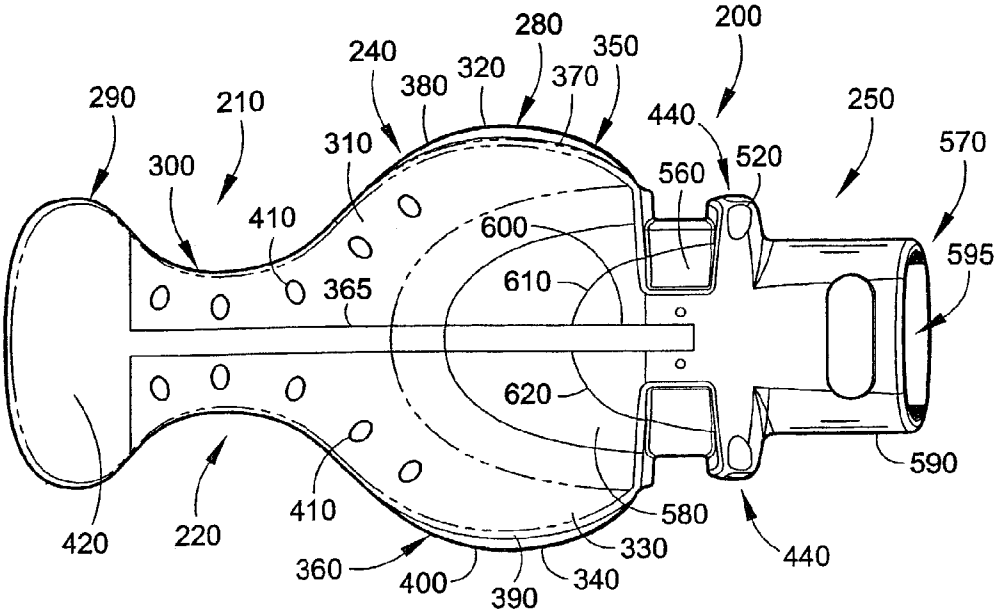

FIG. 19A

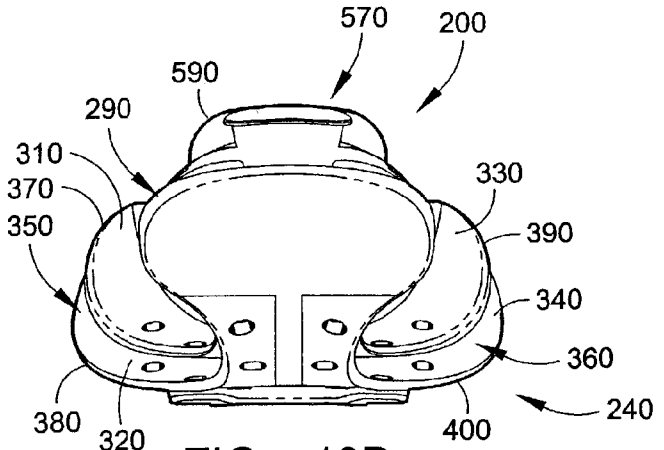

FIG. 19B

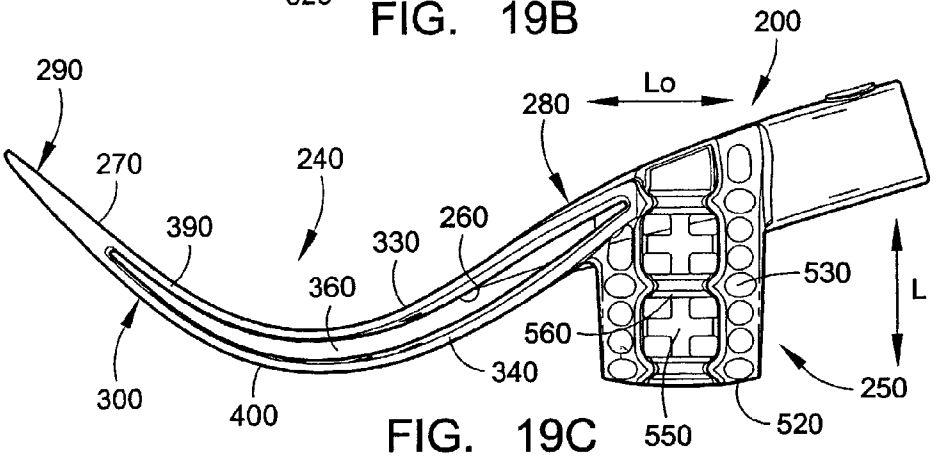

FIG. 19C

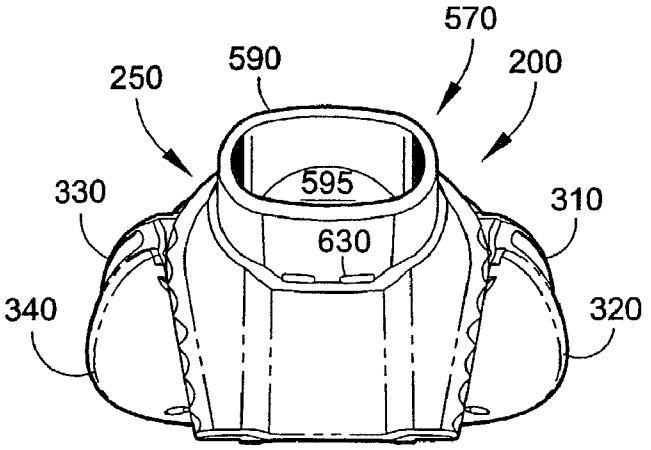

FIG. 19D

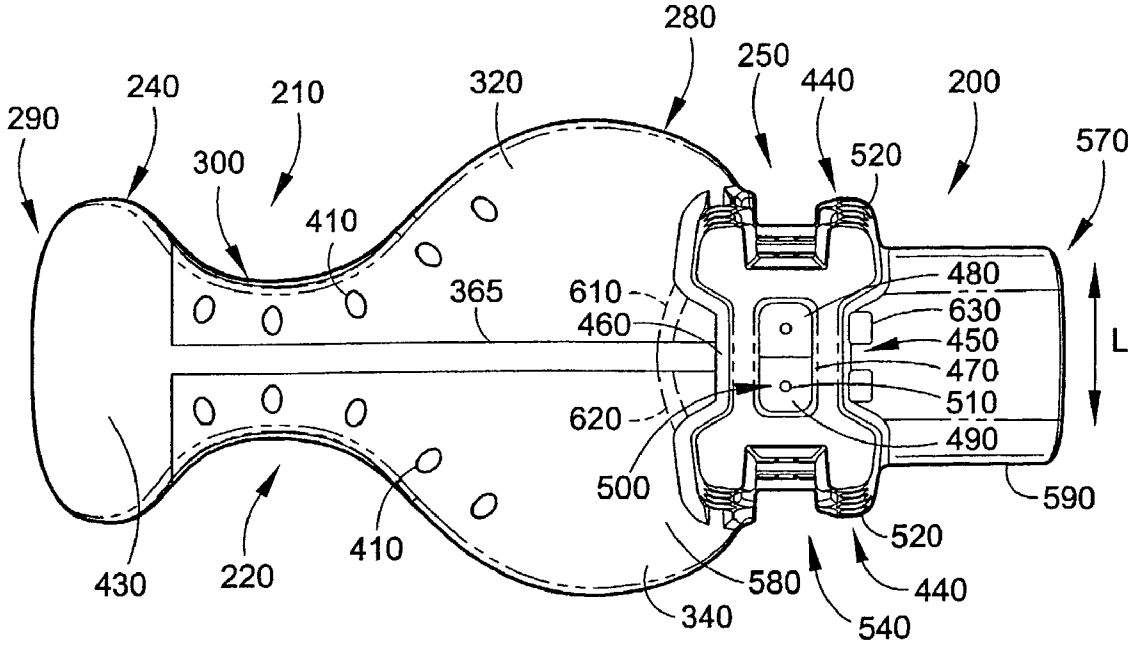

FIG. 19E

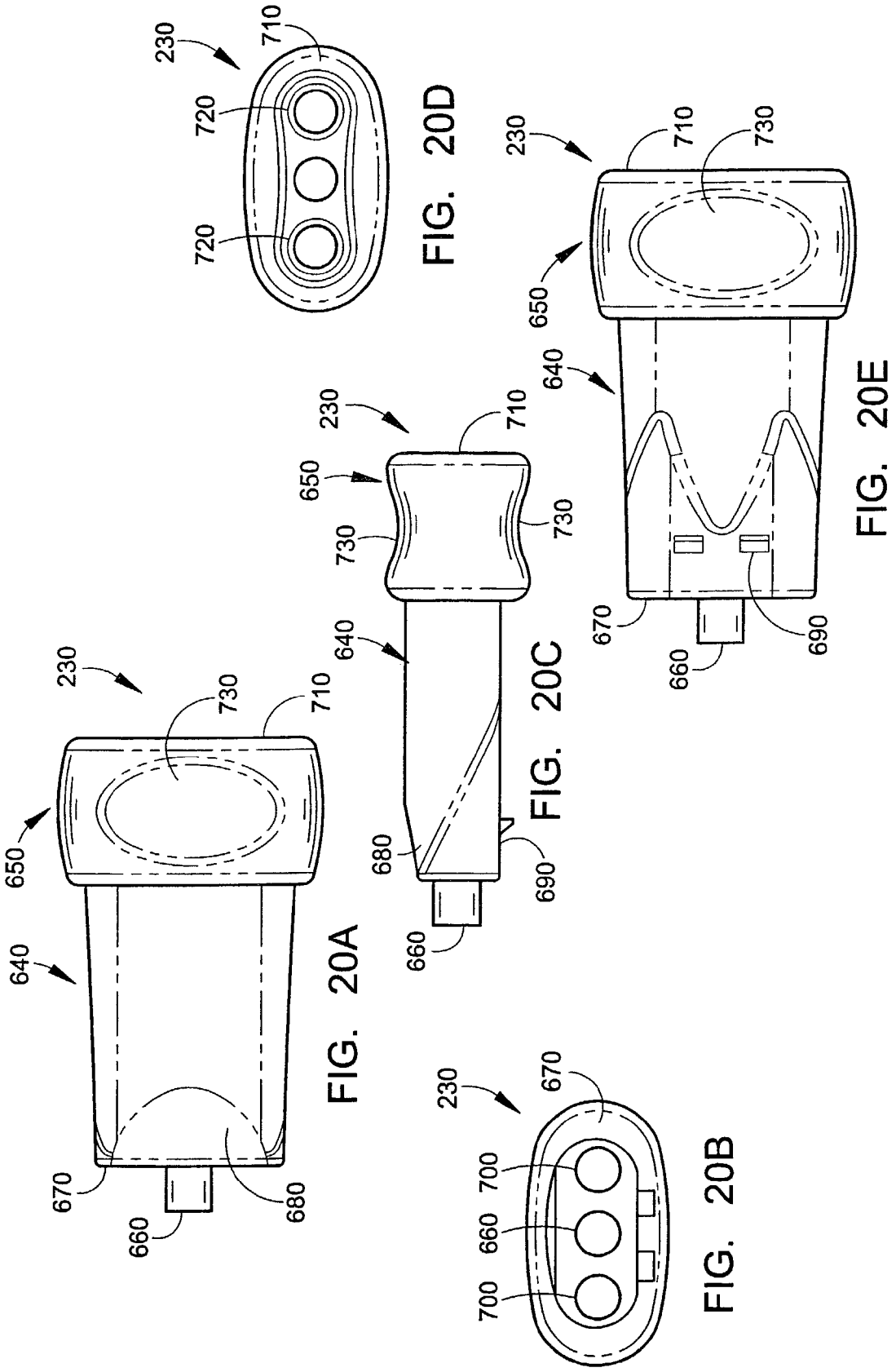
230
710
720
720
FIG. 20D
230
710
730
650
640
670
660
690
FIG. 20E
230
710
650
730
730
640
680
690
660
FIG. 20C
230
730
710
650
640
670
660
680
FIG. 20A
230
670
700
660
700
FIG. 20B

INTRAORAL DEVICE

CROSS-REFERENCE TO RELATED APPLICATIONS

This is a continuation-in-part of prior application Ser. No. 10/006,732 filed Nov. 15, 2001, which issued on Jun. 10, 2003 as U.S. Pat. No. 6,575,746, which is a continuation of prior application Ser. No. 09/777,491 filed Feb. 05, 2001 which issued on Jan. 15, 2002 as U.S. Pat. No. 6,338,627, which is a continuation of prior application Ser. No. 09/490,923 filed on Jan. 25, 2000, now abandoned, which is a continuation of prior application Ser. No. 09/193,916 filed on Nov. 17, 1998, which issued on Feb. 8, 2000 as U.S. Pat. No. 6,022,214.

FIELD OF THE INVENTION

The invention relates, in general, to dental appliances, and, in particular, to dental appliances for illuminating and/or vacuum suction of the mouth of a dental patient for examination and/or operative purposes.

BACKGROUND OF THE INVENTION

Illuminating the interior of a dental patient's mouth during dental examination and/or operation is difficult because the patient's mouth must be illuminated through a narrow opening, i.e., the patient's mouth, and the dentist must work in close proximity to the mouth, often blocking the light source. Proper illumination is essential for dental examination and/or operation.

The oral cavity is typically illuminated by a focused light source mounted approximately two to three feet above a dental chair that the patient rests on. The light source is configured to direct light onto and into the patient's mouth. The amount of light entering the oral cavity using this type of lighting is somewhat limited due to the fact that the light source is remote from the patient's mouth. Additionally, the dentist or oral surgeon must often position oneself or his or her instruments between the light source and the patient's mouth to properly view the patient's mouth, blocking light from entering the mouth. The blocking of light casts an effective shadow in the patient's mouth or in areas of the patient's mouth such as certain teeth.

In order to inhibit this blocking or shadowing, fiber optic lighting has been incorporated into handheld dental instruments. Typically, one or two fiber optic strands extend longitudinally along the instrument and include a light outlet end configured to direct light towards the end of the instrument. However, this type of lighting has a number of drawbacks. Light is only directed on a limited area in the mouth and does not provide illumination for the entire oral cavity. Additionally, the presence of this type of lighting, typically as an add-on feature on the instrument interferes with the comfortable and proper use of the instrument. The fiber optic bundles also-degrade over time because the fiber optics and instrument go through autoclaving numerous times. Components of the instrument, e.g., turbines, may be easily changed once degraded but the fiber optic bundles can not.

Other devices have been designed specifically for illuminating a patient's teeth, but these devices suffer from any or all of the following drawbacks: inadequate illumination of the patient's teeth, and interference with other dental instruments used during the examination and/or operation.

SUMMARY OF THE INVENTION

An aspect of the invention involves a one-piece, injection-molded intraoral device. The intraoral device includes a one-piece, flexible, injection molded body made of a single homogeneous material. The body includes an upper front flap including an upper edge, an upper rear flap including an upper edge separated from the upper edge of the upper front flap by a gap, a lower front flap including a lower edge, and a lower rear flap including a lower edge separated from the lower edge of the lower front flap by a gap. The upper edges of the front flaps are configured to be sealed by an upper part of a patient's mouth and form an upper evacuation channel when the body is disposed within the patient's mouth. The lower edges of the lower flap are configured to be sealed by a lower part of a patient's mouth and form a lower evacuation channel when the body is disposed within the patient's mouth. One or more evacuation holes in at least one of the upper flaps are in communication with the upper evacuation channel and one or more evacuation holes in at least one of the lower flaps are in communication with the lower evacuation channel. A connection section is in communication with the upper evacuation channel and the lower evacuation channel and is configured to extend outside of the patient's mouth to connect with a vacuum source for evacuating fluid from the patient's mouth through the evacuation holes and the evacuation channels.

Another aspect of the invention involves a one-piece, injection-molded intraoral device. The intraoral device includes a one-piece, flexible, injection molded body made of a single homogeneous material. The body includes a flexible upper portion that contacts an upper part of the patient's mouth when the body is disposed within the mouth of the patient and a flexible lower portion that contacts a lower part of the patients mouth when the body is disposed within the mouth of the patient. One or more evacuation holes are in at least one of the upper portion and the lower portion, and one or more evacuation channels are in communication with the one or more evacuation holes. A connection section is in communication with the one or evacuation channels and configured to extend outside of the patient's mouth to connect with a vacuum source for evacuating fluid from the patient's mouth through the one or more evacuation holes and the one or more evacuation channels. A flexible bite piece of the intraoral device is vertically compressible, longitudinally displaceable, and laterally displaceable.

A further aspect of the invention involves a vacuum-only adapter for connecting a vacuum source without illumination capability to an intraoral illumination device. The intraoral illumination device includes a body that is inserted within a patient's mouth. The body includes one or more evacuation holes in communication with one or more evacuation channels to remove fluid from the patient's mouth. An illumination member of the intraoral illumination device illuminates an interior of the patient's mouth. A bite piece of the intraoral illumination device is engaged by a patient's teeth to hold the body in place within the patient's mouth. A connection section of the intraoral illumination device includes an illumination connector that is optically coupled to the illumination member and a vacuum connector that is in communication with the one or more evacuation channels. The vacuum-only adapter includes a plug portion configured to be matingly received by the connection section, a handling portion extending proximally from the plug portion and configured to be handled by a patient, a plug extending distally from the plug portion and configured to

mate with the illumination connector to plug the illumination connector, and one or more vacuum lumens carried by the plug portion to communicate with the vacuum connector channels to remove fluid from the patient's mouth.

Other, more particular features and advantages of the inventions are set forth in the following detailed description and drawings.

BRIEF DESCRIPTION OF THE DRAWINGS

The drawings illustrate both the design and utility of preferred embodiments of the present invention, in which similar elements are referred to by common reference numbers, wherein:

FIG. **1** is a front perspective view of a preferred embodiment of the intraoral illumination device of the present invention shown inside a patient's mouth;

FIG. **2** is a front perspective view of the components of the intraoral illumination device illustrated in FIG. **1** in a disassembled state;

FIG. **3** is a front perspective view of the intraoral illumination device illustrated in FIG. **1**;

FIG. **4** is a rear perspective view of the intraoral illumination device illustrated in FIG. **1**;

FIG. **5** is a top plan view of the intraoral illumination device illustrated in FIG. **1**;

FIG. **6** is a front elevational view of the intraoral illumination device illustrated in FIG. **1**;

FIG. **7** is an end view of the intraoral illumination device illustrated in FIG. **1**;

FIGS. **8**A and **8**B are cross-sectional views of the intraoral illumination device illustrated in FIG. **1** and illustrate the evacuation of fluids through the evacuation system of the device;

FIG. **9** is a front perspective view of an alternative preferred embodiment of the intraoral illumination device;

FIG. **10** is a rear perspective view of the intraoral illumination device illustrated in FIG. **9**;

FIG. **11***a* is a partial perspective view of an alternative embodiment of an integrated light carrier and vacuum tube connector;

FIG. **11***b* is a partial perspective view of an alternative embodiment of an integrated light carrier and vacuum tube that the integrated light carrier and vacuum tube connector illustrated in FIG. **11** may be connected with;

FIG. **12** is a front perspective view of an alternative preferred embodiment of the intraoral illumination device and shows the intraoral illumination device in conjunction with a preferred embodiment of a multi-lumen tube;

FIG. **13** is a rear, top perspective view of a preferred embodiment of a light dispersion piece that may be used with the intraoral illumination device illustrated in FIG. **12**;

FIG. **14** is a cross sectional view of a connection section of the intraoral illumination device and an end portion of the multi-lumen tube;

FIG. **15** is a cross sectional view of the multi-lumen tube taken along lines **15**—**15** of FIG. **14**;

FIG. **16** is a perspective view of an embodiment of a transition mechanism that may be used to transition a separate light carrier and vacuum tube into the single multi-lumen tube; and

FIG. **17** is perspective view of an embodiment of a connector that may be used to couple the transition mechanism to the multi-lumen tube.

FIG. **18**A is a front perspective view of a further embodiment of an intraoral illumination device in conjunction with an embodiment of an optional vacuum-only adapter shown separated from the intraoral illumination device.

FIG. **18**B is a rear perspective view of the intraoral illumination device and the optional vacuum-only adapter illustrated in FIG. **18**A.

FIG. **19**A is a front elevational view of the intraoral illumination device illustrated in FIG. **18**A.

FIG. **19**B is a left side elevational view of the intraoral illumination device illustrated in FIG. **18**A.

FIG. **19**C is a bottom plan view of the intraoral illumination device illustrated in FIG. **18**A.

FIG. **19**D is a right side elevational of the intraoral illumination device illustrated in FIG. **18**A.

FIG. **19**E is a rear elevational view of the intraoral illumination device illustrated in FIG. **18**A.

FIG. **20**A is a front elevational view of the intraoral device adapter illustrated in FIG. **18**A.

FIG. **20**B is a left side elevational view of the intraoral device adapter illustrated in FIG. **18**A.

FIG. **20**C is a bottom plan view of the intraoral device adapter illustrated in FIG. **18**A.

FIG. **20**D is a right side elevational view of the intraoral device adapter illustrated in FIG. **18**A.

FIG. **20**E is a rear elevational view of the intraoral device adapter illustrated in FIG. **18**A.

DETAILED DESCRIPTION OF PREFERRED EMBODIMENTS

With reference to FIGS. **1** and **2**, a preferred embodiment of an intraoral illumination device, indicated generally by the reference numeral **20**, will now be described. The intraoral illumination device **20** generally includes a tongue and cheek retractor **22**, a dispersion piece **24**, and a bite block or piece **26**. The tongue and cheek retractor **22** is a disposable piece, and the dispersion piece **24** and bite piece **26** are sterilizable for reuse. The dispersion piece **24** is coupled to a light carrier such as a fiber optic bundle **28** and extraoral light source **30** for illuminating the dispersion piece **24**. A fluid evacuation tube **32** is in communication with the bite block **26** and a fluid evacuation system **34** of the device **20** for evacuating fluids from a patient's mouth **36**.

The intraoral illumination device **20** will now be described generally in use. The patient opens his or her mouth **36** and a health care provider inserts the device **20** into an intraoral cavity **38** of the patient's mouth **36** between the patient's upper jaw **40** and lower jaw **42**. The patient rests his or her jaws **40**, **42** during the process to be performed by gently biting on the bite block **26** with his or her rear teeth **44**. To help isolate the area of the mouth **36** being worked on and protect the patient's mouth from being injured by the dental tools, the tongue and cheek retractor **22** urges the patient's cheek and tongue away from the area of isolation. Fluids produced in the patient's mouth **36** during the process are removed through the fluid evacuation system **34** of the device **20** and vacuum tube **32**. Light transmitted through the light carrier **28** to the dispersion piece **24** is dispersed outward from the dispersion piece **24**, towards the front of the patient's mouth, from a rear, central part of the intraoral cavity **38** flooding the patient's mouth with light. Illuminating the area of interest in the patient's mouth in this manner eliminates the aforementioned problems with blocked light or shadowing.

Although this invention has been described in connection with illuminating, isolating, and removing fluids from a patient's mouth for dentistry, it will be readily understood by

those skilled in the art how the present invention may have other mouth-related applications where illumination in the mouth is required other than dentistry such as, but not by way of limitation, oral surgery.

With reference to FIGS. **1–7**, each of the components of the device **20** will now be described. The tongue and cheek retractor **22** is made of a single molded piece of soft, flexible, biocompatible material such as Pebax, santoprene, or a molded vinyl material. However, it will be readily understood by those skilled in the art that other soft, flexible materials could be used. The tongue and cheek retractor **22** is preferably produced by a gas-assist injection molding process in order to produce the internal vacuum channels described below. However, it will be readily understood by those skilled in the art that other molding processes such as an injection molding process could also be used. As discussed in more detail below, the tongue and cheek retractor **22** may be a separate piece that can be easily added to or removed from the dispersion piece **24**. The tongue and cheek retractor **22** also may come in two different main configurations, depending on the side of the mouth being examined and/or operated on, i.e., left side, right side, and different sizes for different size and shaped mouths. The retractor **22** has an inner surface **46** and an outer surface **48**.

The retractor **22** includes a curved main body portion **50** and a cheek retractor portion **52**.

The main body portion **50** includes an upper roof portion **54** configured to rest against the roof of the patient's mouth **36** during use and a lower tongue retractor portion **56** to keep the tongue protected and retracted. The lower tongue retractor portion **56** helps to isolate the area of interest in the mouth **36** and protect the tongue from instruments such as dental drills during the dental procedure. The tongue retractor portion **56** includes internal evacuation channels **58**. Evacuation holes **60** on both the inner surface **46** and outer surface **48** of the tongue retractor portion **56** communicate with the evacuation channels **58**. The evacuation channels **58** terminate at an upper part of the tongue retractor portion **56** at a main receiving channel **62**. The main receiving channel **62** includes a lip **64** for slidably receiving the dispersion piece **24**. A pair of shallow evacuation channels **66** extend along a portion of the main receiving channel **62**. Evacuation holes **66** allow communication of the evacuation channels **58** with the outer surface **48** of the retractor **22**.

The cheek retractor portion **52** has a curved, fish-tail shape and includes a pair of evacuation channels **68** exposed to the outer surface **48** of the retractor **22** that communicate with the evacuation channels **66**. The cheek retractor portion **52** protects adjacent cheek tissue during the dental procedure and helps to isolate the area of interest of the mouth **36** during the dental procedure by retracting the cheek tissue.

The dispersion piece **24** is an illumination member and is preferably made of a single, injection-molded piece of light-dispersive, biocompatible, sterilizable material. The dispersion piece **24** may be made of a rigid material such as acrylic or a flexible material such as a molded flexible urethane. However, it will be readily understood by those skilled in the art that other clear, flexible or rigid materials may be used. The dispersion piece **24** preferably has an arcuate, semi-circular shape and includes a generally U-shaped dispersion lens **70**, a fluid evacuation portion **72**, and a pivot portion **74**.

The dispersion lens **70** includes a flange **76** that is slidably received by the lip **64** of the main receiving channel **62** for attaching the dispersion piece **24** to the tongue and cheek retractor **22**. The dispersion lens **70** may have a composition that is varied, e.g., graduated, to control the amount of dispersion in different areas of the lens **70** and evenly distribute the overall rumination. This helps prevent "hot spots" in the dispersion lens **70**, i.e., areas of the lens **70** that emit a greater concentration of light. These "hot spots" make it difficult for the health care provider to observe the patient's mouth. For example, in the area where the fiber optic bundle **28** connects with the dispersion lens **70**, there may be a less textured composition to inhibit the breaking up of internal reflections, and a progressively more textured composition as one approaches the opposite end of the lens **70**. It will be readily understood by those skilled in the art that the tongue and cheek retractor **22** or other covering may have a similar varied composition to control dispersion of light in a similar manner. The dispersion lens **70** optically communicates with the light carrier **28** through a stem **78** and a separate connector **79**. The light carrier **28** is preferably adapted to be directly connected to a commercially available illumination source as those found in most dentist offices or adapted to be connected to such sources through a connector or transition mechanism (not shown). Alternatively, the stem **78** and connector **79** may be a single integrated molded piece. The stem **78** serves as a light coupling between the light carrier **28** and dispersion lens **70**.

In use, light shines outward from the lens **70** and is scattered by the lens **70** to illuminate the patient's mouth **36**. When in place, the configuration of the device **20** causes light to be transmitted by the dispersion lens **70** from a central, rear part of the intraoral cavity, substantially between the patient's rear teeth **44**. The U-shaped dispersion lens **70** has a generally 180 degree arcuate shape. This generally 180 degree arcuate shape and the dispersional qualities of the lens **24** spread the total area of illumination. Illuminating the mouth from the central, rear part of the intraoral cavity and the above-described attributes of the lens **24** eliminate shadows caused by a single-point light source, and shadows caused by the health care provider or equipment used by the health care provider. The intraoral illumination device **20** may replace or be used with dental instruments including fiber optic lighting.

The fluid evacuation portion **72** includes a first main evacuation channel **80** and a second main evacuation channel **82** for evacuating fluids from the device **20**.

The pivot portion **74** includes a first well **84** and a second well **86** that respectively communicate with the first and second main evacuation channels **80**, **82**. A first recess **88** and second recess **90** are used to further communicate the wells **84**, **86** with the fluid evacuation tube **32** in a manner to be described. Respective pivot pins **92** extend from each well **84**, **86**.

The bite block **26** is made of a single piece of biocompatible, sterilizable material such as rubber. The bite block **26** may be formed by a compression molding process, a transfer molding process, a casting process, an injection molding process, or similar process. The bite block **26** includes ribs **94** and ridges **96** along opposite faces **98** of the bite block **26**. The ribs **94** and ridges **96** help to prevent the bite block **26** from slipping between the molar and bicuspid teeth **44** of the patient. When held or engaged between the patient's teeth, the bite block **26** functions to hold the dispersion lens **70** in a rear, central part of the interior cavity of the patient's mouth so that light can be transmitted outward therefrom for illuminating the interior cavity.

A pivot portion **100** of the bite block **26** includes opposite receiving grooves **102**. The receiving grooves **102** receive the pivot pins **92** of the dispersion lens **70** for pivotally connecting the dispersion piece **24** and tongue and cheek retractor **22** to the bite block **26**. This pivoting ability allows

the health care provider to adjust, i.e., swivel, the dispersion piece **24** and tongue and cheek retractor **22** to accommodate patients with different arch widths.

The intraoral illumination device **20** may also come in different sizes and to accommodate different mouth sizes and shapes.

In an alternative embodiment of the device (FIGS. **9**, **10**, **12**), the dispersion piece **24** and bite piece **26** are not pivotally connected to each other, i.e., the connection is fixed. If the connection is fixed, it is especially important to provide the intraoral illumination device **20** in different configurations and sizes to accommodate the different mouth sizes and shapes. Likewise, if the device (FIGS. **9**, **10**, **12**) is disposable, it is important to provide the device in different configurations and sizes to accommodate the different mouth sizes and shapes.

The bite block **26** includes an internal evacuation channel **104** in communication with the first and second main evacuation channels **80**, **82** through the first and second recesses **88**, **90**, respectively, for evacuating fluids from the patient's mouth **36** during the procedure. The recesses **88**, **90** are sized to allow constant sealed communication of the internal evacuation channel **104** with the main evacuation channels **80**, **82**, regardless of the pivoted position or articulation of the dispersion piece **24** and tongue and cheek retractor **22**. External evacuation channels **106** are located on the outside of the bite block **26** and are in communication with the internal evacuation channel **104** for further removal of fluids from the mouth **36**. Fluids are vacuumed from the internal evacuation channel **104** of the bite block **26** through an exit port **108**.

During use, the patient rests his or her jaws **40**, **42** on the faces **98** of the bite block **26**, eliminating the need to strain one's jaw muscles to keep the mouth open. This resting of the jaws **40**, **42** causes the bite block **26** to hold the dispersion piece **24** and tongue and cheek retractor **22** in the rear, central part of the oral cavity. The bite block **26** also serves as an evacuation exit for fluids and as a means for positioning and holding the dispersion piece **24** and tongue and cheek retractor **22** in the oral cavity.

Before inserting the intraoral illumination device **20** in the patient's mouth **36**, the heath care provider ensures that the intraoral illumination device **20** is configured for examining and/or operating on the specific area of the patient's mouth of interest, i.e., right side, left side. If the device **20** includes a replaceable tongue and cheek retractor **22**, the tongue and cheek retractor **22** used with the device **20** should be the proper configuration and size for the area of the patient's mouth of interest. A tongue and cheek retractor **22** specific to the size and area of the mouth of interest is added to the dispersion piece **24** by sliding the flange **76** of the dispersion lens **70** into the main receiving channel **62** of the tongue and cheek retractor **22**. Alternatively, if the device is disposable (FIGS. **9**, **10**, **12**), a device specific to the size and area of the mouth of interest is used. The device is then inserted into the patient's mouth **36** in the manner described above. If the provider desires to examine the opposite side of the patient's mouth **36**, the health care provider removes the device **20** from the patient's mouth, removes the tongue and cheek retractor **22** from the dispersion piece **24** by sliding the retractor **22** off of the flange **76**, flips the bite block **26** and dispersion piece **24**, which are common for both sides of the mouth **36**, adds a new tongue and cheek retractor **22** configured for use with the opposite side of the mouth **36**, and places the device **20** back into the patient's mouth **36** so that bite block **26** resides in the opposite side of the patient's mouth **36**. Alternatively, if the device is disposable, the health care provider must ensure that a device adapted for use with the size and side of the mouth being examined is used. After use of the intraoral illumination device **20**, the tongue and cheek retractor **22** is disposed and the bite piece **26** and dispersion piece **24** are autoclaved or sterilized by a similar method. If a disposable intraoral illumination device is used, the device is simply disposed of in a proper biohazardous receptacle.

With reference to FIGS. **8**A and **8**B, the fluid evacuation system **34** of the intraoral illumination device **20** will now be described in greater detail. During dental examination and/or operation, a number of fluids, e.g., saliva from the parotid gland, blood, water from the dental equipment, are produced in the patient's mouth **36**. It is important to remove these fluids for the comfort of the patient, to prevent fluids and material from being aspirated into the throat or lungs of the patient, and to assist the health care provider in observing and/or operating within the patient's mouth **36**. The fluid evacuation system **34** removes fluids from all areas of the mouth, e.g., operating side, vestibule area on the operation side, the lingual vestibule (along the side of the tongue), contra-lateral side vestibule, eliminating the need for constant patient mouth rinsing and the need for a dental assistant to aspirate debris.

The fluid evacuation system **34** is comprised of the aforementioned evacuation channels and holes located in fluid evacuation members such as the tongue and cheek retractor **22**, dispersion piece **24**, and bite block **26**. As used herein, the term "fluid evacuation member" refers to a piece that includes one or more evacuation channels for removing fluids from the patient's mouth. For example, as illustrated in FIGS. **8**A and **8**B, fluid is drawn from the tongue area through the evacuation holes **60** and evacuation channels **58** in the tongue retractor portion **56**. This fluid is further drawn through the second main evacuation channel **82** of the dispersion piece **24**, and the bite block **26**, and out the vacuum tube **32**. The suction drawing the fluids and debris out the vacuum tube **32** is provided by a vacuum source **110** (FIG. **1**).

With reference to FIGS. **9** and **10**, an intraoral illumination device **112** constructed in accordance with an alternative preferred embodiment of the invention will now be described. Elements of the intraoral illumination device **112** similar to those described above with respect to the intraoral illumination device **20** are referred to by common reference numbers, but with an "a" suffix, e.g., dispersion piece **24***a*. The intraoral illumination device **112** is similar to the intraoral illumination device described above, except it is adapted for use as a disposable unit, eliminating the need for sterilization and the associated costs and spread-of-disease risks. The device **112** includes an integrated bite block and light carrier/fluid evacuation tube connector **114**. The connector **114** is an over-molded piece, has a bitumen configuration, and is configured to extend significantly outside of the mouth of the patient where it connects with a combined bitumen light carrier and vacuum tube **116**. Because this connection between the connector **114** and combined light carrier and vacuum tube **116** is substantially outside of the patient's mouth, the combined light carrier and vacuum tube **16** can be re-used, i.e., does not have to be disposable and does not need to be autoclaved, avoiding degradation, especially of the light carrier, e.g., fiber optic bundle. As discussed above, the bite block **26***a* and dispersion piece **24***a* may be fixed relative to each other. Alternatively, as discussed above, the dispersion piece **24***a* may be pivotally connected to the bite block **26***a* in order to accommodate different size arch widths. Regardless, the bite block **26***a*,

dispersion piece **24***a*, and tongue and cheek retractor **22***a* together form a single, integrated disposable piece.

With reference to FIGS. **11**A and **11**B, an alternative embodiment of an integrated bite block and light carrier/fluid evacuation connector **118** and combined light carrier and vacuum tube **120** are shown. In this embodiment, the light carrier portions and fluid evacuation portions are coaxially aligned.

With reference to FIGS. **12** and **13**, an intraoral illumination device **122** constructed in accordance with an additional preferred embodiment of the invention will now be described. Elements of the intraoral illumination device **122** similar to those described above with respect to the intraoral illumination devices **20**, **112** are referred to by common reference numbers, and with a "b" suffix. Similar to the intraoral illumination device **112** described above, the intraoral illumination device **122** is adapted for use as a disposable unit, eliminating the need for autoclaving and the associated costs and spread-of-disease risks. The device **112** preferably has a two-piece, integrated construction. The device includes a dispersion piece **124** surrounded by a tongue and cheek retractor **126**.

The dispersion piece **124** is preferably made of single, rigid, light-dispersive material such as acrylic or a flexible material such as a molded flexible urethane. However, it will be readily understood by those skilled in the art that other clear, flexible or rigid materials may be used. The dispersion piece **124** has an arcuate, light-dispersing section **128**, a bite block section **130**, and an optical connection section **132**. The light-dispersing section **128** is received within a main receiving channel **134** of the tongue and cheek retractor **126**. The light-dispersing section **128** may have a composition that is varied, e.g., graduated, to control the amount of dispersion in different areas of this section **128** and evenly distribute the overall rumination. The bite block section **130** includes a generally rigid support structure for the bite block. The optical connection section **132** is configured to optically connect the light-dispersing section **128** to the light source through a light carrier such as a fiber optic bundle.

The tongue and cheek retractor **126** includes a main body section **50***b*, a cheek retractor portion **52***b*, an upper roof portion **54***b*, and a tongue retractor portion **56***b*. Fluid evacuation channels (not shown) within the tongue and cheek retractor **126** communicate with the outside of the tongue and cheek retractor (such as through evacuation holes **60***b*) to remove fluids from the patient's mouth. The fluid evacuation channels communicate with the main evacuation channel **134**. The tongue and cheek retractor **126** includes a bite block **136** and a connection section **138**. The connection section **138** is configured to extend outside of a patient's mouth and attach to a multi-lumen tube **140**. The connection section **138** includes a retention barb **142**. The connection section **138** also houses a pair of fluid evacuation channels **144** and the optical connection section **132**.

The multi-lumen tube **140** includes fluid evacuation lumens **146** in order to communicate the fluid evacuation system in the device **122** with a vacuum source and a light carrier **148** in order to optically couple the dispersion piece **124** with a light source. The multi-lumen tube **140** includes a connector **150** for attaching the intraoral illumination device to the multi-lumen tube **140**. A slot **152** in the connector **150** is configured to receive and retain the retention barb **142** when the connection section **138** is fully engaged with the multi-lumen tube **140**.

With reference to FIG. **16**, an embodiment of a transition mechanism **154** to transition a pre-existing light carrier **156** and a vacuum tube **158** at the health care provider's into the single, multi-lumen tube **140** is shown. The transition mechanism **154** includes the appropriate connections for attachment to pre-existing light carriers **156** and vacuum tubes **158** or may include separate connectors for interfacing between light carriers **156** and vacuum tubes **158** and the transition mechanism **154**. In an alternative pre-embodiment, the transition mechanism **154** may include a light source and/or a vacuum source, eliminating the need to connect with a light carrier **156** and/or vacuum tube **158**. With reference to FIG. **17**, a special connector **160** may interface between the transition mechanism **154** and the multi-lumen tube **140** to further transition the transition mechanism **154** into the multi-lumen tube **140**. However, it will be readily apparent to those skilled in the art how transitioning devices such as the special connector **160** may be located within the transition mechanism **154**, eliminating the need for a special connector.

Together, the intraoral illumination device **122**, multi-lumen tube **140**, transition mechanism **154**, and light source form an intraoral illumination system and the intraoral illumination device **122** in conjunction with one or more of the following form an intraoral illumination kit: the multi-lumen tube **140**, the transition mechanism **154**, the light source, the vacuum source, the special connector **160**, and separate connector(s) for attaching light carrier **156** and/or vacuum tube **158** to the transition mechanism **154**.

The method of manufacturing the intraoral illumination device will now be described. The intraoral illumination device is manufactured in a two-step process known as multi-shot injection molding. The acrylic dispersion piece **124** is molded first in a two-piece mold including a first mold having a first mold cavity and a second mold having a second mold cavity, and, then, the second mold is removed. The second mold is replaced by a third mold having a third mold cavity that has the details of the tongue and cheek retractor **126**. Next, rubber is injected over the dispersion piece **124** to form the tongue and cheek retractor **126**. A gas-assist injection molding process is then used to produce the fluid evacuation channels and cavities within the tongue and cheek retractor **126**. Fluid evacuation holes are created in various locations of the tongue and cheek retractor **126** to provide specific area suction within a patient's mouth. The fluid evacuation holes may be created by a laser cutting process, or similar cutting process.

The multi-lumen tube **140** is extruded with the light tube **148** enclosed within the tube **140**. The light tube **148** is made from a semi-flexible, solid-core plastic, optical material such as a fiber optic bundle and is covered with a cladding such as Teflon before extrusion. With reference to FIG. **15**, the multi-lumen tube **140** is extruded so as to have an elliptical shape with the light tube **148** in the center. The tube **140** is extruded so that a portion of the light tube **148** extends beyond the distal end of the multi-lumen tube **140**. After extrusion, the multi-lumen tube **140** is over-molded with a custom connector **150**. Alternatively, the connector **150** may be a separate piece made of a material such as stainless steel and fixed to the end of the tube **140**. The connector **150** is configured to inhibit leakage and ensure a tight connection with the connection section **138** of the intraoral illumination device **122**.

Thus, the intraoral illumination device of the present invention eliminates the problem of shadowing resulting from overhead light sources, single-point light sources, or other illumination sources of the past by transmitting dispersed light outwards from a rear, central part of the intraoral cavity, generally between the patient's rear teeth. The generally 180 degree arc of the dispersion piece spreads the area

of illumination, eliminating shadows caused from a single point light source. The fluid evacuation system of the device vacuums oral fluids, water delivered by a dental hand piece, and debris. The fluid evacuation system prevents these fluids and debris from being aspirated or swallowed down the throat of the patient, improves the comfort of the patient, eliminates the need of the patient to continually rinse his or her mouth, and reduces the amount of spray emitted from the patient's mouth. The tongue and cheek retractor retracts and protects the cheek and tongue of the patient, helping to reduce interference between these parts of the mouth and the procedure. The bite block allows the patient to rest the muscles of mastication, eliminating the need to strain to keep his or her mouth open. Because the device simultaneously removes fluids and debris, isolates the area of interest in the mouth, and illuminates the area of interest, the time of the procedure and the need for an assistant is greatly reduced.

With reference to FIGS. **18**A–**19**E, an intraoral illumination device (hereinafter "intraoral device") **200** constructed in accordance with another embodiment of the invention will now be described. The intraoral device **200** preferably has a single-piece, integrated, homogenous-material, injection-molded construction. The intraoral device **200** is preferably injection molded out of a translucent (e.g., transparent), flexible, soft, elastic, resilient, biocompatible thermoplastic elastomer. The intraoral device **200** is also vertically symmetrical so that an upper half **210** is symmetric with respect to a lower half **220**. This allows the same intraoral device **200** to be positioned on either the left side or the right side of the patient's mouth. The intraoral device **200** may also come in different sizes for different-size mouths. The intraoral device **200** is also disposable after each use.

The intraoral device **200** may be used with an optional vacuum-only adapter **230** if intraoral illumination is not desired with the intraoral device **200**. Further, in an alternative embodiment of the intraoral device **200**, the intraoral device **200** may not include the illumination aspects described in more detail below. In such an embodiment, the intraoral device **200** does not illuminate the patient's mouth.

The single-piece intraoral device **200** generally includes integrated tongue and cheek retractor **240**, bite piece **250**, and connection section **570**, each of which will be described in turn below.

The tongue and cheek retractor **240** has inner surfaces **260** and outer surfaces **270**. The retractor **240** includes an incurved main body portion **280** and a forwardly angled cheek retractor (or "whale tail") portion **290** joined by isthmus portion **300**.

The retractor **240** includes an upper front flap **310**, an upper rear flap **320**, a lower front flap **330**, and a lower rear flap **340**. The front flaps **310**, **330** and rear flaps **320**, **340** are separated by upper gap **350** and lower gap **360**, respectively. The flaps **320**, **330**, **340**, **350** all extend from and share a common, central spine **365**. The spine **365** extends longitudinally a majority of the length of the retractor **240** and divides the upper half **210** from the lower half **220** of the intraoral device **200**. In addition to serving as the intersection location for the flaps **320**, **330**, **340**, **350**, the spine **365** may serve as a light pipe and a separator for an upper internal evacuation channel and a lower internal evacuation channel. The upper front flap **310** and upper rear flap **320** include respective S-shaped upper edges or rims **370**, **380** and the lower front flap **330** and the lower rear flap **340** include respective s-shaped lower edges or rims **390**, **400**.

The flaps **310**, **320**, **330**, **340** include evacuation holes **410** adjacent the edges **370**, **380**, **390**, **400**. The evacuation holes **410** in the upper flaps **310**, **320** may be generally aligned with each other and communicate with an upper internal evacuation channel formed in the upper gap **350** and the evacuation holes **410** in the lower flaps **330**, **340** are generally aligned with each other and communicate with a lower internal evacuation channel formed in the lower gap **360**. Although twenty evacuation holes **410** are shown, the number of evacuation holes **410** and/or location of the evacuation holes **410** may vary. The upper half **210** and/or the lower half **220** may include zero or more evacuation holes **410**. The number of evacuation holes **410** in the upper half **210** may be the same or different from the number of evacuation holes **410** in the lower half **220**. In an alternative embodiment, the evacuation holes may not be aligned with each other.

The upper front flap **310** and the upper rear flap **320** are configured to rest or flex against the paletal area or roof of the patient's mouth **36** during use. The upper roof of the mouth spans the upper gap **350** and pushes or bends the upper front flap **310** and the upper rear flap **320** forward to created a seal along the upper edges **370**, **380**, creating a sealed upper internal evacuation channel in the upper gap **350**. The lower front flap **330** and the lower rear flap **340** are configured to rest or flex against the lingual area of mouth or tongue to keep the tongue protected and retracted during use. The tongue and floor of the patient's mouth span the lower gap **360** and forms a seal along the lower edges **390**, **400**, creating a sealed lower internal evacuation channel in the lower gap **360**.

The cheek retractor portion **290** has an angled, curved, generally whale-tail shape. In use, the cheek retractor portion **290** is flexed inward towards the main body portion **280** and rests against the inner cheek tissue between the cheek tissue and the outside of the teeth. With the cheek retractor portion **290** flexed, the upper flaps **310**, **320** and lower flaps **330**, **340** are closed together, forming a seal along the upper edges **370**, **380** and the lower edges **390**, **400** of the retractor **240** adjacent where the isthmus portion **300** and cheek retractor portion **290** join. A front **420** and/or rear **430** of the cheek retractor portion **290** may include texturing, detail, or a varied composition to disperse light and prevent "hot spots" that can make it difficult for the health care provider to observe the patient's mouth, or lensing (e.g., fresnel lens) to focus light on different areas of the mouth.

With reference especially to FIGS. **19**A and **19**E, the cheek retractor portion **290** is shown as having a maximum height (or width) about ⅔ the maximum height (or width) of the main body portion **280**. In alternative embodiments, the cheek retractor portion **290** may have smaller or larger maximum heights. For example, in an alternative embodiment, the cheek retractor portion **290** may have a whale-tail shape as shown, but with a maximum height or width substantially the same as the maximum height or width of the main body portion **280**.

When the tongue and cheek retractor **240** is positioned within the patient's mouth (similar to that shown in FIG. **1**), the flexed upper flaps **310**, **320**, the flexed lower flaps **330**, **340**, and the flexed cheek retractor portion **290** form an envelope for isolating an area of interest in the patient's mouth and protect the upper roof, tongue and cheek of the patient's mouth from instruments such as dental drills during the dental procedure and prevent aspiration of debris or dropped items into the patient's throat.

The bite piece **250** includes symmetric, opposite tooth-engaging portions **440** joined by an intermediate connection

portion **450**. The intermediate connection portion **450** is more flexible than the tooth engaging portions **440** and allows flexible, resilient, elastic movement of the tooth engaging portions **440** in vertical, longitudinal, and lateral directions with respect to each other to allow vertical, longitudinal, and lateral biting movement by the patient for maximum biting comfort. The bite piece **250** also may be moved or indexed forward and rearward a molar notch to allow for better or more comfortable posterior or anterior positioning of the bite piece **250** and intraoral device **200**.

The bite piece **250** allows 0–50% vertical compressibility (i.e., the bite piece **250** may be compressed vertically when a patient bites on it from 0% of the height of the bite piece **250** to as much as 50% of the height of the bite piece in a general vertical direction V shown in FIG. **19**E). In a preferred embodiment, the bite piece **250** allows at least 5% vertical compressibility, in a more preferred embodiment, the bite piece **250** allows at least 10% compressibility, and in a most preferred embodiment, the bite piece **250** allows at least 15% vertical compressibility.

The bite piece **250** allows 0–75% longitudinal displacement (i.e., displacement of one tooth-engaging portion **440** 0–75% of the width of the tooth-engaging portion **440** relative to the opposite tooth engaging portion **440** in a general longitudinal direction Lo shown in FIG. **19**C). In a preferred embodiment, the bite piece **250** allows at least 5% longitudinal displacement, in a more preferred embodiment, the bite piece **250** allows at least 10% longitudinal displacement, and in a most preferred embodiment, the bite piece **250** allows at least 15% longitudinal displacement of the tooth-engaging portions.

The bite piece **250** allows 0–20% lateral displacement (i.e., displacement of one tooth-engaging portion **440** 0–20% of the length of the tooth-engaging portion **440** relative to the opposite tooth engaging portion **440** in a general lateral direction L shown in FIG. **19**C). In a preferred embodiment, the bite piece **250** allows at least 2% lateral displacement, in a more preferred embodiment, the bite piece **250** allows at least 4% lateral displacement, and in a most preferred embodiment, the bite piece **250** allows at least 6% lateral displacement of the tooth-engaging portions.

The intermediate connection portion **450** includes two opposite vertical walls **460**. Inner surfaces **470** of the two vertical walls **460**, inner surfaces **480** of the tooth engaging portions **440**, and an inner dividing wall **490** form a generally rectangular block-shaped suction cavity **500**. The inner dividing wall **490** includes a pair of vacuum holes **510** to allow a vacuum force to be provided in the cavity **500** for suctioning fluids in the area of the retro molar pad and the maxillary tuberosity of the patient's mouth. The tooth engaging portions **440** include parallel, generally laterally extending tooth-engaging ridges **520**. The tooth-engaging ridges **520** include vertically extending cylindrical chambers **530**. Disposed between the ridges **520** is a groove **540**. At the bottom of the groove **540** are two adjacent, vertically extending cross-shaped members **550**. Vertically extending dividers **560** are disposed at ends of the cross-shaped members **550**. The cross-shaped members **550** and the vertically extending dividers **560** are biting surfaces that may be engaged by the bottom of the top teeth and the top of the bottom teeth to help keep the bite piece **250** in position.

The connection section **570** extends from the bite piece **250** and a proximal portion **580** of the retractor **240**. The connection section **570** is configured to extend outside of a patient's mouth and attach to a multi-lumen tube for delivering illumination and vacuum suction to the intraoral device **200** (or the vacuum-only adapter **230** for delivering only vacuum suction to the intraoral device **200**).

The connection section **570** includes an open-ended tube **590** having a generally elliptical cross-section that tapers slightly in height as the tube **590** intersects the bite piece **250** and the proximal portion **580** of the retractor **240**. An interior of the open-ended tube **590** defines a main vacuum channel **595**. Adjacent the bite piece **250** and the proximal portion **580** of the retractor **240**, the connection section **570** includes a cylindrical tube-shaped illumination connector **600** for transmitting light to the spine **365** and for supporting the plug portion **640** or other plug. On opposite vertical sides of the illumination connector **600**, where the illumination connector **600** joins the proximal portion **580** of the retractor **240**, upper and lower vacuum ports **610**, **620** communicate the main vacuum channel **595** with the upper and lower internal evacuation channels of the retractor **240**. The main vacuum channel **595** communicates with the suction cavity **500** through the vacuum holes **510** in the inner dividing wall **490**. The wall of the tube **590** includes a pair of adjacent, vertically spaced slots **630** for retaining corresponding retention barbs in the plug portion **640** of the vacuum-only adapter **230**.

With reference to FIGS. **20**A–**20**E, the vacuum-only adapter **230** will now be described in more detail. The adapter **230** includes a plug portion **640** and a handling portion **650**.

The plug portion **640** includes a generally elliptical outer cross-section that is slightly smaller in dimension than the generally elliptical cross-section of the tube **590** so that the tube **590** may slidingly receive the plug portion **640**. A cylindrical plug **660** slightly smaller in dimension than the inner dimension of the illumination connector **600** extends from a distal end **670** of the adapter **230**. The cylindrical plug **660** is matingly received by the illumination connector **600** when the plug portion **640** is plugged into the tube **590**. The plug portion **640** includes a beveled surface **680** adjacent the distal end **670**. When the plug portion **640** is plugged into the tube **590**, the beveled surface **680** engages a corresponding angled surface within the connection section **570**. Thus, the beveled surface **680** may be used to ensure that the adapter **230** is properly oriented when plugged into the connection section **570**. With the plug portion **640** plugged into the connection section **570**, the plug portion **640** helps to keep the bite piece **250** from collapsing in the front. A pair of barbs **690** extend from the plug portion **640** on a side opposite from the beveled surface **680**. When the plug portion **640** is plugged into the tube **590**, the barbs **690** engage the corresponding slots **630** in the connection section **570** to retain the adapter **230** in the connection section **570**. A pair of vacuum lumens **700** extend longitudinally within the adapter **230**, along the cylindrical plug **660**. Near a proximal end **710** of the adapter **230**, each vacuum lumen **700** may terminate in a receiver **720** for receiving cylindrical vacuum lines of a vacuum hose.

The handling portion **650** may have an overall dimension slightly larger than the dimension of the plug portion **640** and include opposite incurved sides **730** to facilitate handling of the handling portion **650** with one's fingers.

One or more further embodiments of the intraoral device may include one or more of the implementations described immediately below.

A separate plug, adapter, or tube having one or more LEDs may plug into the connection section of the intraoral device for illuminating the intraoral device.

The plug, adapter, or tube may include a heat sink for removing heat emitted from the one or more LEDs. An

example heat sink may include a fluid cooling system that circulates a cooling fluid (e.g., water) in the area of the one or more LEDS. For example, vacuum tubing that includes one or more vacuum lumens to remove fluid from the patient's mouth may also carry a cooling fluid delivery lumen for delivering cooling fluid to the region of the one or more LEDs. After removing heat from the region of the one or more LEDs, the cooling fluid may be withdrawn through the one or more vacuum lumens.

The plug, adapter, or tube may include suitable electronics to control intensity of light from the one or more LEDs.

A slidable/movable filter may be employed with a separate curing light. The movable filter may be moved to a first position to filter out light that causes composite filling material to cure, preventing curing, and moved away from this position to allow light from the curing light to cure the composite filling material.

The plug, adapter, or tube may include a suction control mechanism that provides upper and lower evacuation channel control to control suction to the upper evacuation channel, the lower evacuation channel or both evacuation channels of the intraoral device.

The plug, adapter, or tube may include temperature control (e.g., through the use of one or more temperature sensors such as a thermistor) to turn off the one or more LEDs if the temperature in the region becomes too high.

A proximal end of the tubing used to deliver vacuum suction, electricity, and cooling fluid may include a plug-in hook up or connector to connect to vacuum, electricity, and water sources. Adjacent a proximal end of the tubing, an on/off switch may be located to actuate vacuum suction, electricity, and/or cooling fluid flow.

Using one or more LED's as the light source for the intraoral device in the manner described above eliminates the need for lengthy and heavy fiber optics and allows the tubing to drop 90 degrees from patient's mouth to the floor. This eliminates the pulling on the side of the patient's mouth caused by lengthy and heavy fiber optics in the past.

Although this invention has been described in terms of certain preferred embodiments, other embodiments apparent to those of ordinary skill in the art are also within the scope of this invention. Accordingly, the scope of the invention is intended to be defined only by the claims that follow.

What is claimed is:

1. A one-piece, injection-molded intraoral device, comprising:

a one-piece, flexible, injection molded body made of a single homogeneous material, the body including

a spine,

an upper front flap including an upper edge,

an upper rear flap including an upper edge separated from the upper edge of the upper front flap by a gap,

a lower front flap including a lower edge,

a lower rear flap including a lower edge separated from the lower edge of the lower front flap by a gap,

the upper flaps joined along the spine to form an upper open pocket and the upper edges of the upper flaps configured to be sealed together by an upper part of a patient's mouth and form an upper evacuation channel when the body is disposed within the patient's mouth,

the lower flaps joined along the spine to form a lower open pocket and the lower edges of the lower flap configured to be sealed together by a lower part or tongue of a patient's mouth and form a lower evacuation channel when the body is disposed within the patient's mouth,

one or more evacuation holes in at least one of the upper flaps and in communication with the upper evacuation channel,

one or more evacuation holes in at least one of the lower flaps and in communication with the lower evacuation channel,

a connection section in communication with the upper evacuation channel and the lower evacuation channel and configured to extend outside of the patient's mouth to connect with a vacuum source for evacuating fluid from the patient's mouth through the evacuation holes and the evacuation channels.

2. The intraoral device of claim **1**, wherein the body includes a flexible bite piece having at least 15% vertical compressibility.

3. The intraoral device of claim **1**, wherein the body includes a flexible bite piece having at least 15% longitudinal displaceability.

4. The intraoral device of claim **1**, wherein the body includes a flexible bite piece having at least 6% lateral displaceability.

5. The intraoral device of claim **1**, wherein the body includes a flexible bite piece having at least 15% vertical compressibility, at least 15% longitudinal displaceability, and at least 6% lateral displaceability.

6. The intraoral device of claim **1**, wherein the body includes an illumination member to be optically coupled to a light source for illumination of an interior of the patient's mouth.

7. The intraoral device of claim **1**, wherein the body terminates distally in a cheek portion that flexes when the body is disposed in the patient's mouth to cause at least a portion of the upper edges of the upper flaps and the lower edges of the lower flaps to seal together.

8. A one-piece, injection-molded intraoral device, comprising:

a one-piece, flexible, injection molded body made of a single homogeneous material, the body including

a flexible upper portion forming an open pocket that contacts an upper part of the patient's mouth when the body is disposed within the mouth of the patient,

a flexible lower portion forming an open pocket that contacts a lower part or tongue of the patient's mouth when the body is disposed within the mouth of the patient,

one or more evacuation holes in at least one of the upper portion and the lower portion,

one or more evacuation channels in at least one of the upper portion and the lower portion and in communication with the one or more evacuation holes,

a connection section in communication with the one or evacuation channels and configured to extend outside of the patient's mouth to connect with a vacuum source for evacuating fluid from the patient's mouth through the one or more evacuation holes and the one or more evacuation channels, and

a flexible bite piece that is vertically compressible, longitudinally displaceable, and laterally displaceable.

9. The intraoral device of claim **8**, wherein the bite piece is at least 15% vertically compressible.

10. The intraoral device of claim **8**, wherein bite piece is at least 15% longitudinally displaceable.

11. The intraoral device of claim **8**, wherein the bite piece is at least 6% laterally displaceable.

12. The intraoral device of claim **8**, wherein the bite piece is at least 15% vertically compressible, at least 15% longitudinally displaceable, and at least 6% laterally displaceable.

13. The intraoral device of claim **8**, wherein the body includes an illumination member to be optically coupled to a light source for illumination of an interior of the patient's mouth.

* * * * *