UNITED STATES DISTRICT COURT
WESTERN DISTRICT OF MICHIGAN
SOUTHERN DIVISION

SOLMETEX, LLC,

Plaintiff/Counter-Defendant,

v.

ASCENTCARE DENTAL PRODUCTS, INC.,

Defendant/Counter-Plaintiff.

Case No. 1:24-cv-00954-RJJ-MV

Hon. Robert J. Jonker

DEFENDANT/COUNTER-PLAINTIFF'S BRIEF IN SUPPORT OF ITS MOTION TO STAY

Table of Contents

Page

Table of Authorities ii

I. INTRODUCTION 1

II. FACTUAL BACKGROUND 1

A. Issues in Suit and Status of the Proceedings 5

B. Ascentcare's Fillings for *Inter Partes* Review and Post-Grant Review 6

III. ARGUMENT 7

A. *Inter Partes* Review and Post Grant Review Proceedings 7

B. Legal Standards for Motions to Stay Pending IPR/PGR 10

C. The Court Should Stay the Litigation During *Inter Partes* Review and Post-Grant Review of the Asserted Utility Patents 11

1. This Litigation Is in Its Early Stages 11

2. Granting a Stay Will Simplify the Litigation 12

3. A Stay Will Not Unduly Prejudice Solmetex 14

4. The Unchallenged Design Patents Should Not Prevent a Stay 15

5. The Competing Lanham Act Claims Should Not Prevent a Stay 17

IV. CONCLUSION 18

CERTIFICATE OF COMPLIANCE 19

CERTIFICATE OF SERVICE 20

Table of Authorities

Page(s)

Cases

Acantha LLC v. Depuy Synthes Sales Inc.,
No. 15-CV-1257, 2016 WL 8201780 (E.D. Wis. June 6, 2016) 12

Apple, Inc. v. Fintiv, Inc.,
IPR2020-00019, Paper 11 (PTAB Mar. 20, 2020) 9

ASCII Corp. v. STD Entertainment USA, Inc.,
844 F. Supp. 1378 (N.D. Cal. 1994) 10

Asetek Holdings, Inc. v. Cooler Master Co.,
No. 13-CV-00457-JST, 2014 WL 1350813 (N.D. Cal. Apr. 3, 2014) 14

Bell Semiconductor, LLC v. NXP Semiconductors, N.V.,
2022 WL 1447948 (W.D. Tex. Feb. 7, 2022) 16

Berry Sterling Corp. v. Pescor Plastics, Inc.,
122 F.3d 1452 (Fed. Cir. 1997) 15

Black & Decker Inc. v. Positec USA, Inc.,
No. 13 C 3075, 2013 WL 5718460 (N.D. Ill. Oct. 1, 2013) 14

Blast Motion, Inc. v. Zepp Labs, Inc.,
No. 15-CV-700 JLS (NLS), 2016 WL 5107678 (S.D. Cal. Mar. 29, 2016) 11, 14

e-Imagedata Corp v. Digital Check Corp,
No. 16-CV-576, 2017 WL 657462 (E.D. Wis. Feb. 17, 2017) 14

e-Watch, Inc. v. Mobotix Corp,
No. SA-12-CA-492-FB, 2013 WL 12091167 (W.D. Tex. May 21, 2013) 13

Equipements de Transformation IMAC v. Anheuser-Busch Cos., Inc.,
559 F. Supp. 2d 809 (E.D. Mich. 2008) 10

Ethicon, Inc. v. Quigg,
849 F.2d 1422 (Fed. Cir. 1988) 10

Fresenius USA, Inc. v. Baxter Int'l, Inc.,
721 F.3d 1330 (Fed. Cir. 2013) 8

Ignite USA, LLC v. Pacific Market International, LLC,
No. 14 C 856, 2014 WL 2505166 (N.D. Ill. May 29, 2014) 13

Kopp Dev., Inc. v. Metrasens, Inc.,
No. 1:21-CV-01216-PAB, 2024 WL 4826381 (N.D. Ohio Nov. 19, 2024) 11

Krippelz v. Ford Motor Co.,
667 F.3d 1261 (Fed. Cir. 2012) 13

Luv N' Care, Ltd. v. Regent Baby Products Corp.,
2014 WL 572524 (S.D. N.Y. 2014) 16

Marine Polymer Techs., Inc. v. HemCon, Inc.,
672 F.3d 1350 (Fed. Cir. 2012) 15

Merck Sharp & Dohme LLC v. Johns Hopkins University,
2024 WL 3252974 (D. Md. 2024) 17

Metro Rail, LLC v. Siemens Mobility, Inc.,
2024 WL 323374 (S.D. N.Y. 2024) 16

Microsoft Corp. v. i4i Ltd. P'ship,
564 U.S. 91 (2011) 8

Microsoft Corp. v. Tivo Inc.,
2011 WL 1748428 (N.D. Cal. May 6, 2011) 11

Milwaukee Elec. Tool Corp. v. Hilti, Inc.,
138 F.Supp.3d 1032 (E.D. Wis. 2015) 12, 13

Orbital Australia Pty v. Daimler AG,
No. 15-CV-12398, 2015 WL 5439774 (E.D. Mich. Sept. 15, 2015) 11

Out Rage, LLC v. New Archery Prods. Corp.,
No. 11-CV-701-BBC, 2012 WL 12995533 (W.D. Wis. Apr. 9, 2012) 9, 13

Regents of Univ. of Michigan v. St. Jude Med., Inc.,
No. 12-12908, 2013 WL 2393340 (E.D. Mich. May 31, 2013) 17

Seaquist Closures LLC v. Rexam Plastics,
No. 08-C-0106, 2008 WL 4691792 (E.D. Wis. Oct 22, 2008) 8

Serv. Sol. U.S. LLC v. Autel.US Inc.,
No. 13-10534, 2015 WL 401009 (E.D. Mich. Jan. 28, 2015) 12

Solmetex Ex. 2001
Ascentcare Dental Products v. Solmetex - IPR2025-01065

Software Rights Archive, LLC v. Facebook, Inc.,
No. 12-cv-03970-RMW, 2013 WL 5225522 (N.D. Cal. Sept 17, 2013)..... 7, 8

Sorensen v. Black & Decker Corp.,
No. 06cv1572 BTM (CAB), 2007 WL 2696590 (S.D. Cal. Sept. 10, 2007)..... 11

Sport Dimension, Inc. v. The Coleman Company, Inc.,
820 F.3d 1316 (Fed. Cir. 2016)..... 15

St. Martin Invs., Inc. v. Bandit Indus., Inc.,
No. 1:17-CV-472, 2017 WL 6816506 (W.D. Mich. Aug. 30, 2017) 1, 11

VPR Brands, LP v. MONQ, LLC,
599 F. Supp. 3d 714 (M.D. Tenn. 2022)..... 11

Statutes

35 U.S.C. §§ 102 and 103..... 8

35 U.S.C. §112..... 5

35 U.S.C. § 171..... 15

35 U.S.C. § 311..... 8

35 U.S.C. § 314(a) 8

35 U.S.C. § 315(e)(2) 9

35 U.S.C. § 316(e)..... 8

35 U.S.C. § 321..... 9

35 U.S.C. § 325(d) 10

Other Authorities

37 C.F.R. § 42.102(a)(1) 6

Changes to Implement Inter Partes Review Proceedings, 77 Fed. Reg. at 48,680 (codified at 37 C.F.R. §§ 42.100 et seq.)..... 7

I. INTRODUCTION

District courts have broad discretion to stay proceedings pending *inter partes* review ("IPR") of asserted patents pursuant to their inherent authority to control their dockets. *St. Martin Invs., Inc. v. Bandit Indus., Inc.*, No. 1:17-CV-472, 2017 WL 6816506, at *1 (W.D. Mich. Aug. 30, 2017). Here, Ascentcare Dental Products, Inc. ("Ascentcare") has filed seven petitions for IPR and post-grant review ("PGR") with the Patent and Trial Appeal Board ("PTAB")—one petition for each utility patent. The petitions will likely result in many, if not all, asserted claims being invalidated. The PTAB's rulings will likely narrow the scope of this case. Therefore, Ascentcare respectfully requests that this Court stay these proceedings.

II. FACTUAL BACKGROUND

Ascentcare is a family-owned business founded in West Michigan. Ascentcare and Solmetex are competitors in the field of dental isolation mouthpieces, though Ascentcare is currently significantly smaller.

In 2020, Ascentcare began developing a dental isolation mouthpiece known as "VacuLUX". The VacuLUX mouthpiece (shown right) performs four functions during a dental procedure: suction of the intraoral cavity, tongue suppression,

cheek retraction, and passive opening of the patient's mouth. Ascentcare based its design on the Zyris Isolite mouthpiece, a design whose patents expired in 2019. Sportel Dec. ¶ 2, Ex. A. Like the Isolite mouthpiece, the Ascentcare mouthpiece is designed like a butterfly and includes a central spine and four flaps (two anterior, two posterior) each extending from the spine.

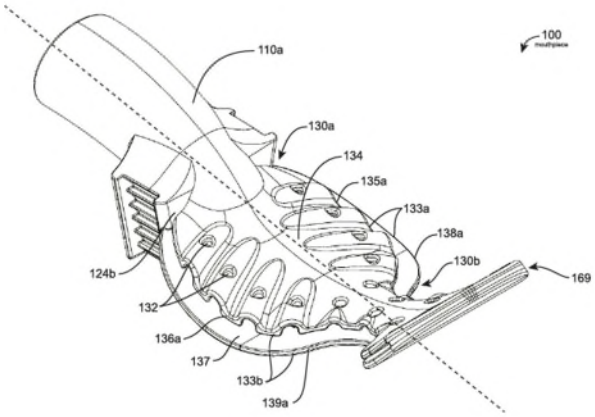

Ascentcare VacuLUX

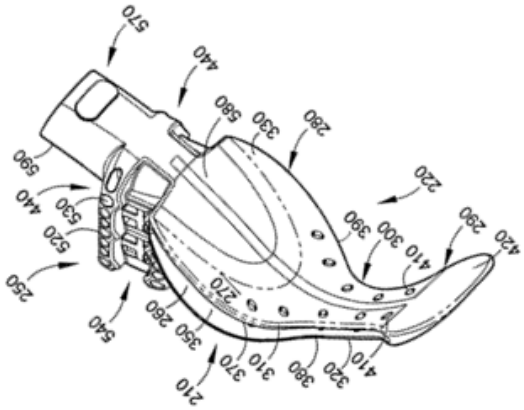

Zyris Isolite

In 2020, another dental isolation mouthpiece, called Dryshield, was on the market, and Dryshield only had one utility patent (U.S. 8,911,232, "the '232 Patent") directed to a mouthpiece at that time. When Ascentcare developed and announced the VacuLUX mouthpiece, *none* of the asserted patents existed. Sportel Decl, ¶ 3, Ex. B; ECF 35, ¶¶ 15–24. The '232 Patent does not cover the VacuLUX mouthpiece, else Solmetex would have asserted patent infringement

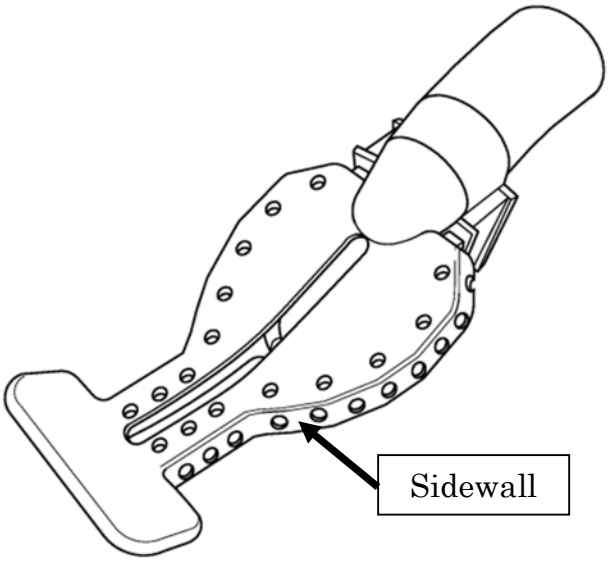

against Ascentcare's mouthpiece when it was launched in 2020 (or in this lawsuit). In fact, before May 2023, Solmetex/Dryshield never contended that a mouthpiece having a central spine violated any of its patents. Nor could it, as another competitor, Isolite, held patents directed to an isolation mouthpiece having a central spine when Solmetex filed its patents. Ex. A, col. 15, ℓ. 53. Instead, Solmetex designed around the Isolite patents, by forming a mouthpiece with an internal pocket having *sidewalls* and an internal "bridge structure" to collectively replace the various functions of a central spine. Ex. B, col. 6, ℓℓ. 25–41. Thus, Ascentcare felt confident that it did not violate Solmetex's intellectual property so long as its design included a public-domain, central spine and excluded a pocket with enclosing sidewalls.

Unhappy with a new competitor with a superior product, Solmetex contrived a strategy to hinder Ascentcare. Soon after Ascentcare announced its product, Dryshield began an aggressive, targeted continuation patent application practice manipulating claim language and stretching its patent disclosure beyond what it originally envisioned. In one patent family alone, Solmetex has filed *sixteen* U.S. continuation patent applications, eight of which were filed after the VacuLUX launched. Sportel Dec. ¶ 4, Ex. C. In addition, Solmetex amended claims in three pending applications demonstrating a dramatic pivot in claim scope. Specifically, Solmetex removed the sidewalls limitation entirely one month after Ascentcare's announcement. Sportel Dec. ¶ 5, 15-16 Ex. D, J-K. Notably, the VacuLUX mouthpieces lack any sidewalls. After obtaining new patents through this aggressive

continuation practice, Solmetex's counsel sent a letter to Ascentcare alleging infringement of four patents. ECF 35, Ex. J.

Ascentcare took this letter seriously. It responded, explaining why the infringement claims were incorrect. Sportel Dec. ¶ 6, Ex. E. Solmetex then obtained more patents using Ascentcare's non-infringement letter as a guide to draft new patent claims.

In 2023, Ascentcare decided to redesign the VacuLUX mouthpiece to both further distinguish Solmetex's patents and develop improvements based on customer feedback. Ascentcare notified Solmetex of the redesign and considered the matter settled. ECF 35, ¶ 33. Unsatisfied, Solmetex filed this lawsuit and sought more even more patent claims trying to cover the new design. Accordingly, Solmetex is using the extraordinary cost of patent litigation to harm the much smaller Ascentcare.

Solmetex's claim language manipulation has led to Ascentcare identifying numerous written description errors, anticipation problems, and obviousness issues because Solmetex is attempting to recapture ideas that are in the public domain. ECF 17, Affirm. Defenses 2-9. The IPRs and PGR tackle many of these patentability issues and demonstrate to the PTAB how Solmetex has changed its theory of what it purportedly invented. Sportel Dec. ¶ 7, Ex. F. Importantly, Ascentcare's IPRs assert a foreign prior art reference never considered by the Patent Office—a reference that shows a mouthpiece with enclosing sidewalls, the supposed original point of novelty. *Id.* at p. 14-18, 51-57. In addition, Ascentcare filed a post-grant review petition, which demonstrates to the PTAB how Solmetex changed its original written description to

cover Ascentcare's product. Sportel Dec. ¶ 8, Ex. G, pp. 70-80. The PTAB is uniquely positioned to recognize and address these improprieties, and the Court should defer to the PTAB by staying the case.

The Patent Office is a much more efficient venue to address the questionable validity of Solmetex's patent claims. To preserve the resources of both the Court and the parties, Ascentcare requests a stay of the litigation until the PTAB decides whether to institute IPRs. Under the PTAB's rules, such decisions occur between November 20, 2025, and mid-December 2025. Ascentcare respectfully requests the stay lasts until 30 days after the PTAB issues the last institution decision, at which time the Court and the parties can reconsider whether the stay should be continued.

A. Issues in Suit and Status of the Proceedings

Solmetex asserted infringement of ten patents, making this a large, complicated, and costly case. ECF No. 35. There are numerous defenses and legal issues present in this case. ECF No. 17, Affirm. Defenses 1–13. Ascentcare has strong invalidity positions, not only based on the prior art, but also based on lack of written description under 35 U.S.C. §112. Moreover, Ascentcare is not liable for infringement after the issuance of the patents under the doctrine of prosecution history estoppel because Ascentcare made substantial investments in the VacuLUX before the patents issued. ECF 17, Affirm. Defenses 2-9.

Solmetex has done little to advance the litigation or narrow issues in dispute. Instead, Solmetex added patents to the case at every opportunity. ECF Nos. 13, 35. Solmetex even moved to add a new patent because it incorrectly believed that this

patent's presence would help prevent a stay.[1] ECF 28, p. 6. This failed gamesmanship was argued to the Court as a purported benefit. *Id.*

Ascentcare has not yet answered the Second Amended Complaint. While some initial written discovery has been exchanged, there is much still to do. No depositions have occurred. Sportel Decl., ¶ 9. The *Markman* hearing is not scheduled until December 15, 2025, and briefing has not yet occurred. ECF No. 18-1. Fact discovery does not close until January 21, 2026, and expert discovery has not even begun. *Id.* No trial date is set. *Id.*

B. Ascentcare's Fillings for *Inter Partes* Review and Post-Grant Review

Ascentcare has filed six IPR petitions and one post-grant review ("PGR") petition. Sportel Decl., ¶ 10. The invalidity arguments set forth in the IPR petitions are strong. Solmetex did not invent dental isolation mouthpieces. Indeed, Solmetex's purported invention is virtually identical to what already existed in the prior art.

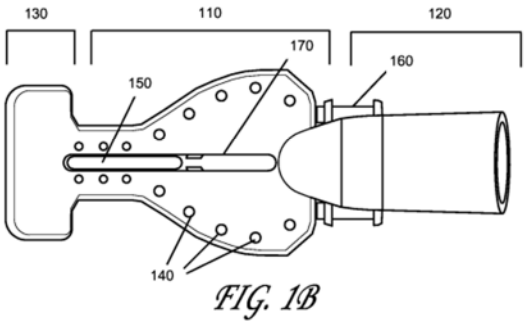

Solmetex

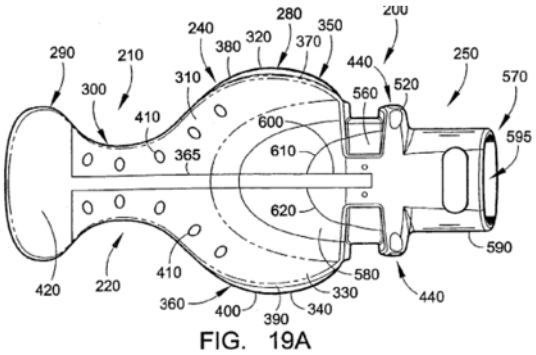

Isolite

[1] 37 C.F.R. § 42.102(a)(1).

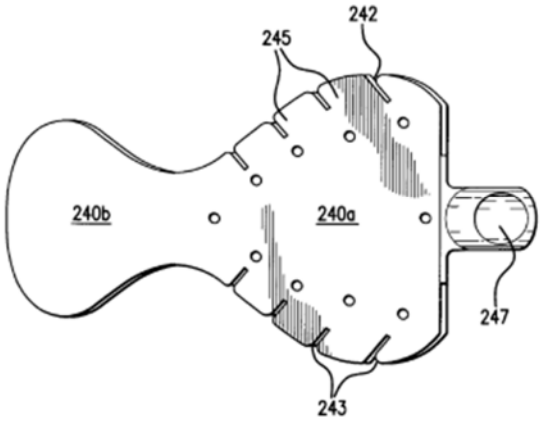

"Mr Thirsty"

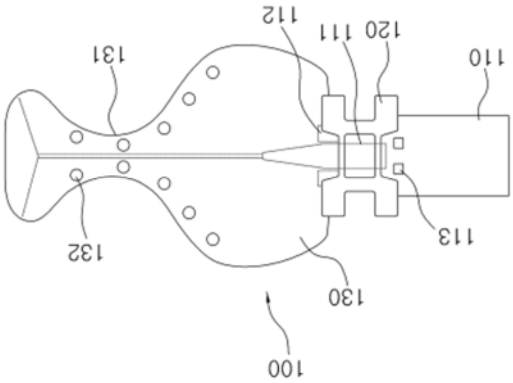

Korean Prior Art

Furthermore, the IPR petitions presented prior art and grounds never considered by the patent examiner and render the currently asserted claims unpatentable.

III. ARGUMENT

A. *Inter Partes* Review and Post Grant Review Proceedings

Congress created IPR proceedings as a cost-effective alternative to litigation. Sportel Decl., ¶ 13. They allow "the agency with expertise [the Patent Office] to have the first crack at cancelling any claims that should not have issued in the patents-in-suit before costly litigation continues." *Software Rights Archive, LLC v. Facebook, Inc.,* No. 12-cv-03970-RMW, 2013 WL 5225522, at *6 (N.D. Cal. Sept 17, 2013). IPRs were implemented to "establish a more efficient and streamlined patent system that will improve patent quality and limit unnecessary and counterproductive litigation costs." *Changes to Implement Inter Partes Review Proceedings*, 77 Fed. Reg. at 48,680 (codified at 37 C.F.R. §§ 42.100 et seq.).

Indeed, Congress intended IPRs to "provide[] more coordination between district court infringement litigation and *inter partes* review to reduce duplication of

efforts and costs." *Id.* at 48,721. To this end, similar to the old *inter partes* reexaminations, IPRs "allow[] courts to avoid expending unnecessary judicial resources by attempting to resolve claims which may be amended, eliminated or lucidly narrowed" by the PTO "and the *expertise of its officers." Seaquist Closures LLC v. Rexam Plastics,* No. 08-C-0106, 2008 WL 4691792, at *1 (E.D. Wis. Oct 22, 2008).

An IPR can request cancellation of patent claims under 35 U.S.C. §§ 102 and 103. 35 U.S.C. § 311. The validity of the claims is reviewed under a preponderance of the evidence standard of proof, 35 U.S.C. § 316(e), in contrast to the clear and convincing standard applicable to litigation. *Microsoft Corp. v. i4i Ltd. P'ship*, 564 U.S. 91, 95 (2011).

The PTAB will institute an IPR if "there is a reasonable likelihood that the petitioner would prevail with respect to at least 1 of the claims challenged in the petition." 35 U.S.C. § 314(a). The IPR is conducted before a panel of three technically-trained Administrative Patent Judges of the Patent Trial and Appeal Board. *Id.* at §§ 6(a)-(b); § 311. The Patent Office must issue a final IPR determination within one year of a petition's institution. *Id.* at § 316(a)(11).

Conclusions in IPR proceedings are binding in concurrent infringement litigation. *Fresenius USA, Inc. v. Baxter Int'l, Inc.*, 721 F.3d 1330 (Fed. Cir. 2013). If during IPR "the original claim is cancelled or amended to cure invalidity, the patentee's cause of action is extinguished and the suit fails." *Id.* at 1340. On the other hand, if the claims survive IPR, the petitioner is estopped from asserting that a claim

is invalid "on any ground that the petitioner raised or reasonably could have raised during that inter partes review." 35 U.S.C. § 315(e)(2).

"Shifting validity issues to the Patent and Trademark Office has several advantages, including: (1) the benefit to the court of [USPTO personnel's] expert analysis of the prior art; (2) the possibility that the outcome of the reexamination will encourage settlement; (3) the limitation of issues, defenses and evidence following reexamination; and (4) the likely reduction of costs for the parties and the court." *Out Rage, LLC v. New Archery Prods. Corp.,* No. 11-CV-701-BBC, 2012 WL 12995533, at *3 (W.D. Wis. Apr. 9, 2012). These advantages are significant. A high percentage of claims are ultimately found unpatentable in PTAB trials. In 2024, the PTAB instituted IPR/PGR on 74% of patents challenged, and of the trials that reached a final written decision, 70% found all challenged claims unpatentable and 85% found at least one claim unpatentable. Sportel Decl., ¶ 11–12, Ex. H, pp. 7, 10, Ex. I, p. 7.

These same benefits apply to post-grant review. Post-grant review is largely the same as an IPR proceeding, but a Petitioner may challenge claims under §§ 101 and 112 as well as §§ 102/103. 35 U.S.C. § 321(b). Post-grant review is only available nine months after patent issuance for most patents. 35 U.S.C. § 321(c). Otherwise, a post-grant review trial is largely similar to an *inter partes* review trial.

Solmetex is likely to argue that changes to the PTAB's discretionary denial policy under the new Director weigh against a stay. However, none of the discretionary denial factors help Solmetex. *Apple, Inc. v. Fintiv, Inc.*, IPR2020-00019, Paper 11 (PTAB Mar. 20, 2020). No trial date is set, and this litigation is still in its

infancy. Solmetex may also argue that a significant portion of the prior art in the IPRs was also cited during prosecution. 35 U.S.C. § 325(d). But that argument ignores the never-before-seen foreign reference, and it is important to remember that Solmetex changed patent scope one month after Ascentcare's product announcement. The Examiner was led into believing that Solmetex claimed a mouthpiece with enclosing sidewalls for seven years, while Solmetex now contends its patent is broader. Ex. D, pp. 2, 16, 28. Thus, the prior art previously cited is again applicable. Also, Ascentcare applied the prior art cited during prosecution in the exact same manner in the IPRs as the Examiner did during prosecution, so the previously considered art is still very relevant.

B. Legal Standards for Motions to Stay Pending IPR/PGR

District courts have the inherent power to manage their dockets and stay proceedings, including in response to proceedings at the Patent Office. *Ethicon, Inc. v. Quigg*, 849 F.2d 1422, 1426-27 (Fed. Cir. 1988)). In determining whether to stay litigation pending PTAB review, district courts consider the following three factors: "(1) whether discovery is complete and whether a trial date has been set; (2) whether a stay will simplify the issues in question and trial of the case; and (3) whether a stay would unduly prejudice or present a clear tactical disadvantage to the nonmoving party." *Equipements de Transformation IMAC v. Anheuser-Busch Cos., Inc.,* 559 F. Supp. 2d 809, 815 (E.D. Mich. 2008).

Courts have adopted "a liberal policy in favor of granting motions to stay proceedings pending the outcome of USPTO reexamination or reissuance proceedings." *ASCII Corp. v. STD Entertainment USA, Inc.*, 844 F. Supp. 1378, 1381

(N.D. Cal. 1994). Even when a lawsuit involves claims beyond patent infringement claims, courts stay cases pending IPR. *Kopp Dev., Inc. v. Metrasens, Inc.*, No. 1:21-CV-01216-PAB, 2024 WL 4826381, at *4 (N.D. Ohio Nov. 19, 2024).

C. The Court Should Stay the Litigation During *Inter Partes* Review and Post-Grant Review of the Asserted Utility Patents

1. This Litigation Is in Its Early Stages

This case is in a relatively early stage. Claim construction proceedings have not begun. Some written discovery has occurred, but no depositions have been taken. Sportel Decl., ¶ 9. This strongly favors a stay. This court has granted a stay in view of *inter partes* review cases when a stay is sought early in discovery, as here. *St. Martin*, 2017 WL 6816506, at *2. Even if claim construction briefing or position exchange had occurred, courts still stay litigation in view of IPR filings. *VPR Brands, LP v. MONQ, LLC*, 599 F. Supp. 3d 714, 719 (M.D. Tenn. 2022); *Orbital Australia Pty v. Daimler AG*, No. 15-CV-12398, 2015 WL 5439774, at *1 (E.D. Mich. Sept. 15, 2015). The question is not so much what has occurred, but rather what is left to complete. *See Sorensen v. Black & Decker Corp.*, No. 06cv1572 BTM (CAB), 2007 WL 2696590, at *4 (S.D. Cal. Sept. 10, 2007). "In other words, if a significant amount of discovery remains, a stay is more appropriate." *Blast Motion, Inc. v. Zepp Labs, Inc.*, No. 15-CV-700 JLS (NLS), 2016 WL 5107678, at *2 (S.D. Cal. Mar. 29, 2016). Here, most of the casework remains.

No trial date has been set. This fact, like the fact that discovery is only in its nascent stage, weighs in favor of a stay. *Microsoft Corp. v. Tivo Inc.*, 2011 WL 1748428, at *6 (N.D. Cal. May 6, 2011) (finding this factor weighed in favor of a stay

despite parties' efforts in preparing for claim construction because "neither the tutorial nor the claim construction hearing has occurred").

2. Granting a Stay Will Simplify the Litigation

"[I]t is clearly consistent with the fundamental purpose of the IPR procedure that a stay of litigation pending IPR has the potential to simplify the issues to be litigated, and to do so in a 'streamlined' fashion." *Acantha LLC v. Depuy Synthes Sales Inc.*, No. 15-CV-1257, 2016 WL 8201780, at *1 (E.D. Wis. June 6, 2016). Because of the manipulation of the patent applications during prosecution, combined with the lower burden of proof in IPRs/PGR and the material prior art and invalidity grounds that were never before the examiner, it is highly likely that IPRs/PGR of all seven asserted, utility patents will be instituted. Moreover, if instituted, it is likely that many, if not all, asserted claims of the asserted patents will be found unpatentable. This prediction is supported by Patent Office's statistical analysis showing that, in a large percentage of IPRs, some or all challenged claims were found unpatentable. Ex. H; Ex. I. District courts rely on these statistics in finding "the likelihood of simplification of at least some of the issues in this case is high, and certainly cannot be described as merely speculative." *Milwaukee Elec. Tool Corp. v. Hilti, Inc.*, 138 F.Supp.3d 1032, 1039 (E.D. Wis. 2015).

Even where other claims and issues will not be resolved through IPR, the IPRs will still simplify issues. "[T]he question is merely whether the issues will be simplified, and not whether the entire case will be resolved." *Milwaukee Elec.*, 138 F.Supp.3d at 1038 (citing *Serv. Sol. U.S. LLC v. Autel.US Inc.*, No. 13-10534, 2015 WL 401009, at *3 (E.D. Mich. Jan. 28, 2015). For example, if only some claims are

canceled, the parties will not have to address claim construction, validity or infringement of those claims. *Milwaukee Elec.*, 138 F.Supp.3d at 1039. "Moreover, even in the event that none of the claims are invalidated, the Court will still benefit from the USPTO's expertise in evaluating the scope and validity of those claims," *id.*, and "plaintiff may make prosecution disclaimers that bear on the construction of the [patent] claims," *Out Rage*, ECF 72 at p. 7 (*citing Krippelz v. Ford Motor Co.*, 667 F.3d 1261, 1266 (Fed. Cir. 2012). In any event, "if the PTO declines *inter partes* review, little time is lost, but if the PTO grants *inter partes* review, the promise is greater for an important contribution by the PTO to resolution of the governing issues in the litigation." *e-Watch, Inc. v. Mobotix Corp*, No. SA-12-CA-492-FB, 2013 WL 12091167, at *8 (W.D. Tex. May 21, 2013). Should the Patent Office cancel all asserted claims of the asserted, utility patents, the case is significantly simplified. On the other hand, if some of the claims of the asserted patents survive IPR, estoppel would trigger, and the Patent Office's insight will certainly aid this Court and the parties in focusing the issues. This factor strongly favors a stay.

There is a reasonable likelihood that this Court could expend significant time and resources litigating issues that could very well be rendered moot by an IPR decision. *Ignite USA, LLC v. Pacific Market International, LLC*, No. 14 C 856, 2014 WL 2505166, at *4 (N.D. Ill. May 29, 2014). "The risk that the PTAB's decision will require the parties and the court to repeat expensive and time-consuming aspects of the case actually works in favor of, rather than against, granting a stay." *e-Imagedata*

Corp v. Digital Check Corp, No. 16-CV-576, 2017 WL 657462, at *4 (E.D. Wis. Feb. 17, 2017).

Because the parties and the Court have expended very little time and resources on this litigation, but could expend substantial resources that could be wasted, this factor strongly favors a stay.

3. A Stay Will Not Unduly Prejudice Solmetex

The requested stay is not sought for tactical advantage, but rather to avoid the financial expense and risks of inconsistency inherent in multiple proceedings.

Additionally, there has been no prejudicial delay to Solmetex. Once Ascentcare determined that pre-suit resolution was not possible, counsel for Ascentcare moved quickly to prepare and file seven separate IPRs. Sportel Dec. ¶ 14. This apparently came as a surprise to Solmetex. But this is not gamesmanship. Ascentcare was forthright about its intentions when asked by the Court at the Rule 16 conference.

Plus, there is hardly any delay. Ascentcare filed its first IPR petition less than 6 months after being served. Regardless, "[d]elay alone does not usually constitute undue prejudice, because parties having protection under the patent statutory framework may not complain of the rights afforded to others by that same statutory framework." *Blast Motion*, 2016 WL 5107678, at *4 (quoting *Asetek Holdings, Inc. v. Cooler Master Co.*, No. 13-CV-00457-JST, 2014 WL 1350813, at *4 (N.D. Cal. Apr. 3, 2014)). Further, several courts find that if IPRs are not instituted, "the delay in waiting for that decision will be fairly short." *Black & Decker Inc. v. Positec USA, Inc.*, No. 13 C 3075, 2013 WL 5718460, at *2 (N.D. Ill. Oct. 1, 2013); *see also* e-*Imagedata*, 2017 WL 657462, at *3 ("Although here the PTAB has not yet decided whether to

institute IPR, if it decides such review is unwarranted any stay that might be issued will be lifted and will not have materially delayed this lawsuit.”).

Here, there is no harm that cannot be remedied with damages. The accused products have been on sale since 2020. There will be an institution decision on the earliest filed IPRs by early November (at the latest). Then, after institution, even if some claims are upheld and Ascentcare is later found to be liable for infringement, Solmetex can recover any damages it may have accrued during the stay. *Marine Polymer Techs., Inc. v. HemCon, Inc.*, 672 F.3d 1350, 1362–63 (Fed. Cir. 2012). For all of these reasons, this final factor also strongly supports a stay.

4. The Unchallenged Design Patents Should Not Prevent a Stay

A design patent does not protect any functional features; a design patent protects that which is purely ornamental. 35 U.S.C. § 171; *Sport Dimension, Inc. v. The Coleman Company, Inc.*, 820 F.3d 1316 (Fed. Cir. 2016). The features shown and claimed in Solmetex’s asserted design patents are all purely functional. Indeed, the features shown and claimed by the asserted design patents are all claimed as functional features in the utility patents, which is a major factor in determining if they actually cover anything ornamental. *Berry Sterling Corp. v. Pescor Plastics, Inc.*, 122 F.3d 1452, 1456 (Fed. Cir. 1997) (a factor in determining whether a design patent is purely functional is “whether there are any concomitant utility patents”). As a result, Solmetex’s design patents are invalid.

Regardless of the design patent weakness, the design patents’ presence should not impact the decision to stay the case. “The propriety of a stay does not depend on

all patents in suit having been instituted for IPR." *Metro Rail, LLC v. Siemens Mobility, Inc.*, 2024 WL 323374, *2–*5 (S.D. N.Y. 2024). "The potential resolution of three [out of seven] patent disputes through IPRs would significantly reduce the number of claims that proceed to trial,' favoring a stay of the case." *Bell Semiconductor, LLC v. NXP Semiconductors, N.V.*, 2022 WL 1447948, at *2 (W.D. Tex. Feb. 7, 2022). Even when unchallenged design patents are involved, courts still stay matters in view of IPRs. *Luv N' Care, Ltd. v. Regent Baby Products Corp.,* 2014 WL 572524, *1–*3 (S.D. N.Y. 2014) ("It would prejudice both parties and be an extraordinary drain on limited judicial resources to bifurcate the case by type of claim").

The damages considerations will be the same between the utility and design patents, and an expert report would lump both patents together to determine reasonable royalties. Additionally, discovery will be largely the same, especially since the same inventors supposedly invented and designed the utility and design patents; and the prior art is largely the same. No preliminary injunction has been sought, so monetary damages would be sufficient to cover any alleged harm. Thus, if the Court sees the value in deferring to the expertise of the Patent Office on the utility patents, then the Court should allow the Patent Office to issue opinions related to them before advancing the case related to the design patents. Indeed, the expertise of the PTAB may shed valuable light on the scope of the design patents.

5. The Competing Lanham Act Claims Should Not Prevent a Stay

While each party has asserted a false advertising claim under the Lanham Act, Ascentcare is the only entity experiencing ongoing harm. Before Solmetex filed this lawsuit, Ascentcare removed all the allegedly false statements from its website. ECF 17, ¶¶ 38–42, 46, 49–50, 57. There is no ongoing harm to Solmetex because the allegedly false statements have been removed.

Meanwhile, Solmetex continues to market its products as meeting the high-volume efficiency ("HVE") industry standard, even though they do not. Solmetex has not suggested that it plans to stop advertising itself as HVE, nor has Solmetex suggested that it has redesigned its product to address this defect. Despite this ongoing harm, Ascentcare is willing to put its false advertising claim on hold so that patent invalidity can be handled by the experts at the Patent Office, as this appears to be the "core issue" of Solmetex's complaint. *Regents of Univ. of Michigan v. St. Jude Med., Inc.*, No. 12-12908, 2013 WL 2393340, at *2–*3 (E.D. Mich. May 31, 2013).

Without any ongoing harm to Solmetex, there is no risk in staying Solmetex's Lanham Act claim. If Solmetex really was damaged by the statements, and if the statements really were false, then those issues can be resolved later. Nothing about Solmetex's Lanham Act claim will change between now and 17 months from now. *Merck Sharp & Dohme LLC v. Johns Hopkins University*, 2024 WL 3252974, *1–*3 (D. Md. 2024) (staying a case with patent and breach of contract issues).

IV. CONCLUSION

For the foregoing reasons, Defendant Ascentcare respectfully requests that this Court stay this litigation pending a decision by the PTAB to institute IPR/PGR proceedings on the asserted patents, and to continue that stay should the Patent Office institute one or more of the IPRs/PGR. Alternatively, should the Court deny Defendant's motion to stay, Defendant Ascentcare respectfully requests leave to renew the motion to stay if the PTAB institutes IPR/PGR of any of the asserted patents.

MILLER JOHNSON
Attorneys for Defendant/Counter-Plaintiff

Date: July 11, 2025

By: */s/ Nathan P. Sportel*

Nathan P. Sportel (P87032)
D. Andrew Portinga (P55804)
Jacob L. Carlton (P84859)
45 Ottawa Avenue SW, Suite 1100
Grand Rapids, MI 49503
Telephone: (616) 831-1700
sporteln@millerjohnson.com

CERTIFICATE OF COMPLIANCE

As required by Western District of Michigan Local Rule 7.3, Defendant/Counter-Plaintiff certifies that its Brief in Support of Its Motion to Stay contains 4,298 words, including headings, footnotes, citations, and quotations but excluding the cover sheet, table of contents, table of authorities, signature block, this certificate of compliance, and the certificate of service. The word count was generated using Microsoft Word 2019.

Date: July 11, 2025 By: */s/ Nathan P. Sportel*
Nathan P. Sportel (P87032)

CERTIFICATE OF SERVICE

Nathan P. Sportel certifies that on July 11, 2025, Defendant/Counter-Plaintiff's Motion to Stay, Certificate of Attempt to Obtain Concurrence, Defendant/Counter-Plaintiff's Brief in Support of Its Motion to Stay, and Declaration of Nathan P. Sportel in Support of Defendant/Counter-Plaintiff's Motion to Stay were served upon all parties who receive ECF filings.

Date: July 11, 2025 By: */s/ Nathan P. Sportel*
Nathan P. Sportel (P87032)