US 20180153637A1

(19) United States

(12) Patent Application Publication

(10) Pub. No.: US 2018/0153637 A1

(43) Pub. Date: Jun. 7, 2018

Al-Shawi et al.

(54) **SURGICAL GAS SHIELD MODULE WITH ELEVATION SYSTEM**

(71) Applicants: **Modher Ibrahim Al-Shawi**, Bulleen, Victoria (AU); **Ibrahim Mudhir Ahmed Al-Shawi**, Amman (JO)

(72) Inventors: **Modher Ibrahim Al-Shawi**, Bulleen, Victoria (AU); **Ibrahim Mudhir Ahmed Al-Shawi**, Amman (JO)

(21) Appl. No.: **15/575,343**

(22) PCT Filed: **May 26, 2016**

(86) PCT No.: **PCT/IB2016/053097**

§ 371 (c)(1),
(2) Date: **Nov. 18, 2017**

Related U.S. Application Data

(60) Provisional application No. 62/171,357, filed on Jun. 5, 2015, provisional application No. 62/203,550, filed on Aug. 11, 2015, provisional application No. 62/305,558, filed on Mar. 9, 2016.

Publication Classification

(51) **Int. Cl.**
A61B 90/40 (2006.01)
A61M 1/00 (2006.01)

(52) **U.S. Cl.**
CPC ***A61B 90/40*** (2016.02); ***A61M 1/0088*** (2013.01); *A61B 2218/008* (2013.01); *A61B 2217/005* (2013.01); *A61B 2090/401* (2016.02)

(57) **ABSTRACT**

A surgical gas shield device comprising a gas shield module and an elevation system. The gas shield module has a body housing which is divided into a discharge chamber and a suction chamber. The elevation system is configured to hold said gas shield module around a surgical site at a desired position and orientation. Discharge of a gas introduced from a positive pressure source through discharge ports of the gas shield module over the surgical site and suction of the gas and other air borne byproducts from the surgical site through the suction ports of the gas shield device by application of a partial vacuum create a gas shield over the surgical site. The gas shield module can be fork type or closed loop type. The elevation system can be flexible fold type or inflatable type.

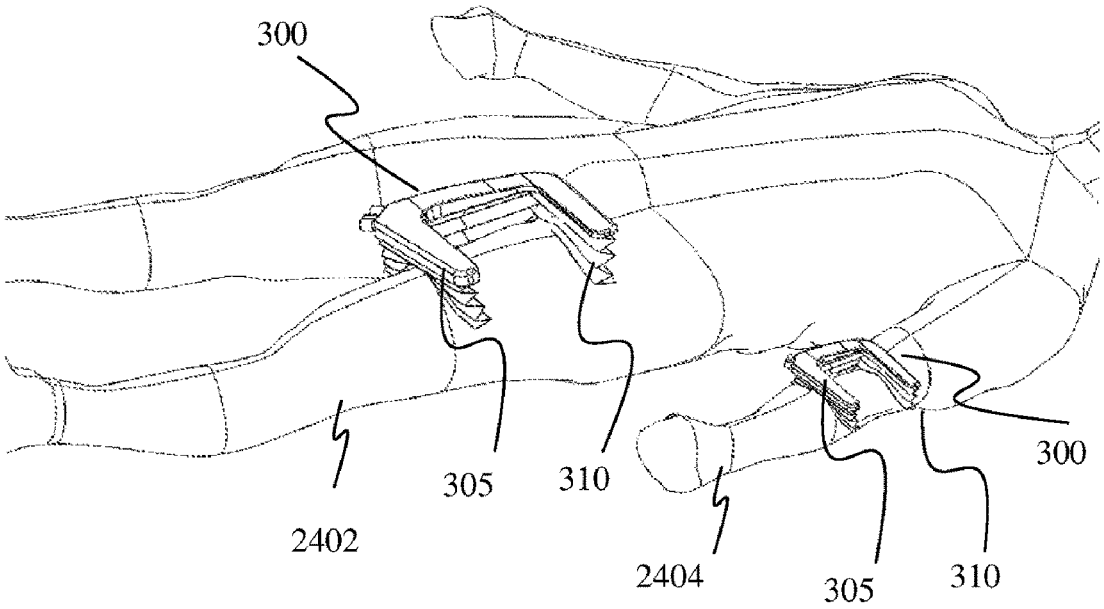

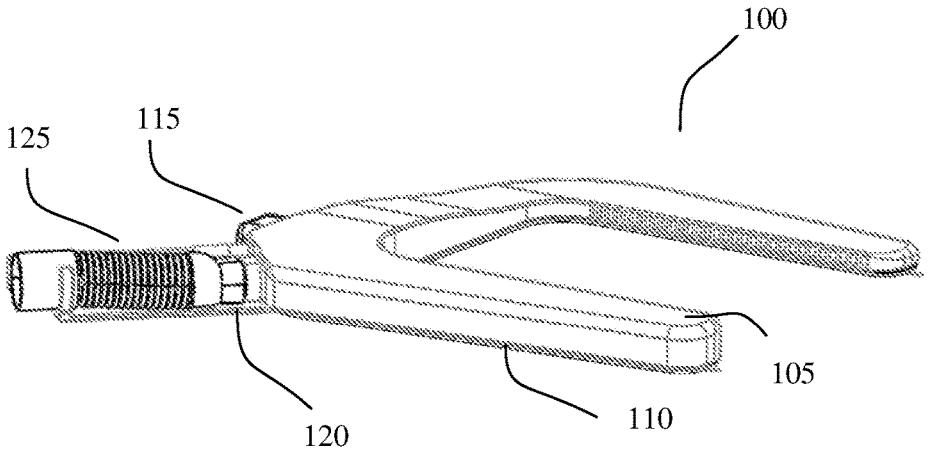

FIG. 1A

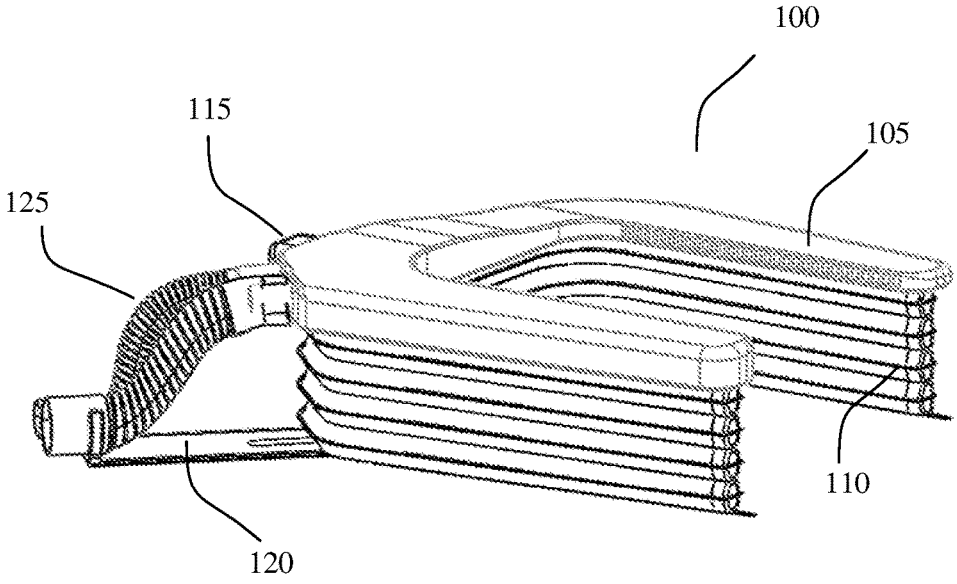

FIG. 1B

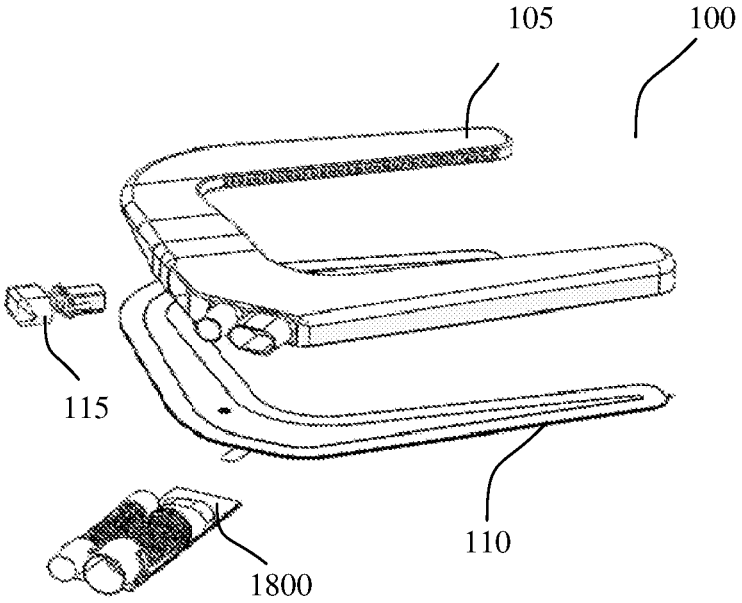

FIG. 2A

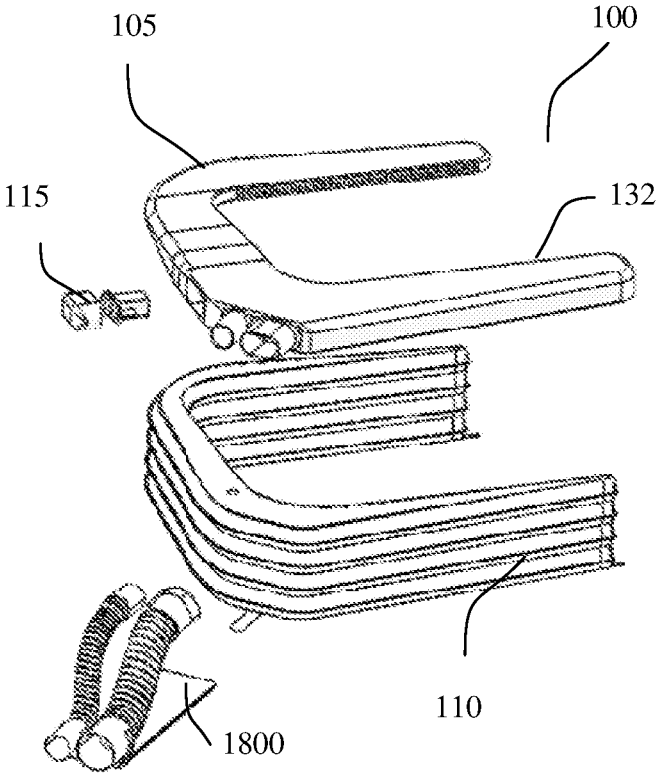

FIG. 2B

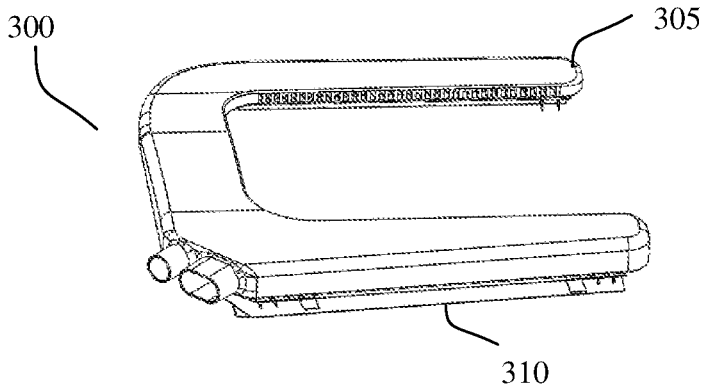

FIG. 3A

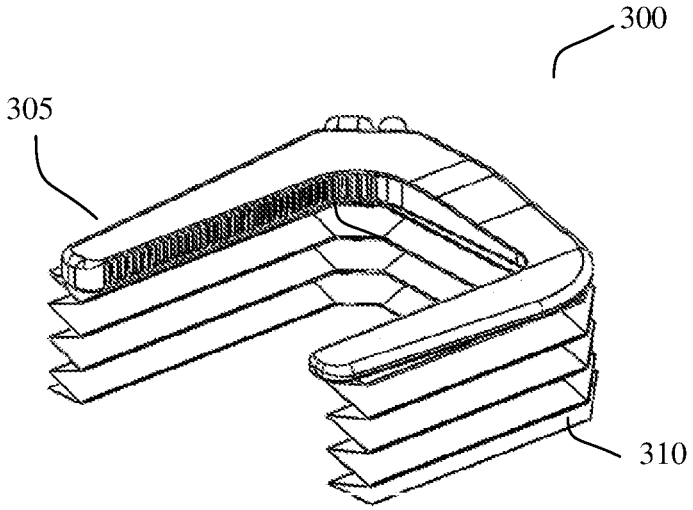

FIG. 3B

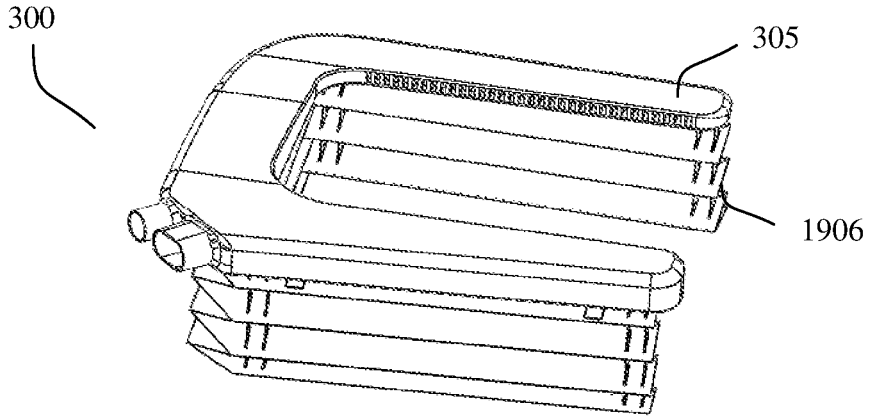

FIG. 3C

105

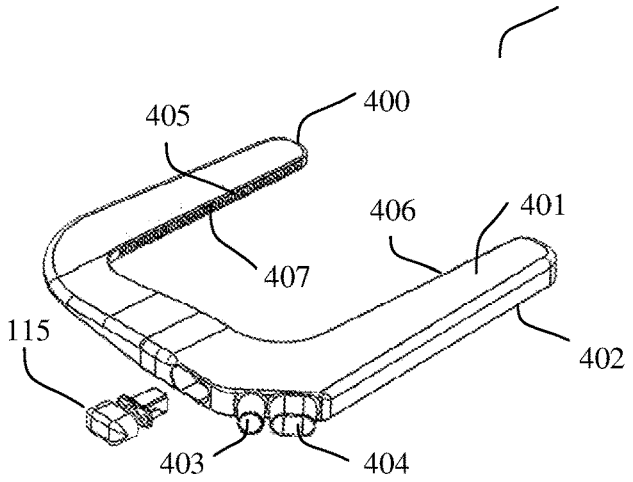

FIG. 4A

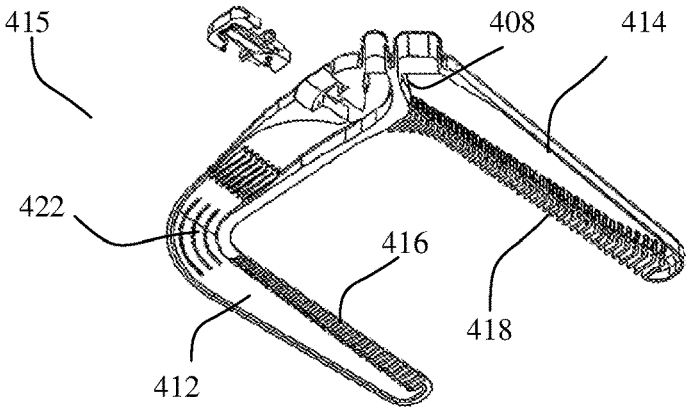

FIG. 4B

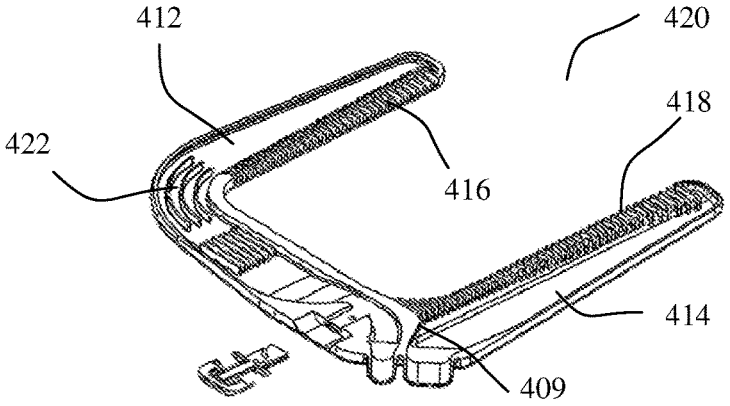

FIG. 4C

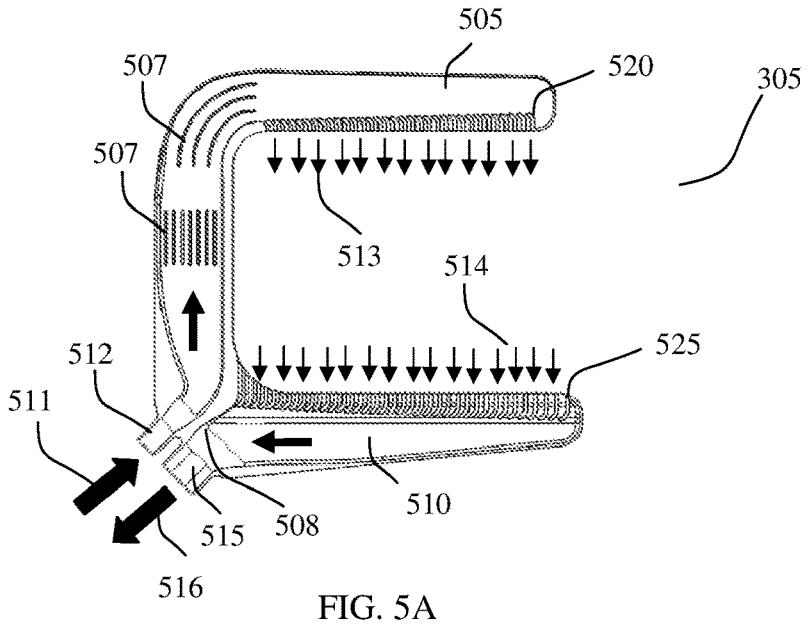

FIG. 5A

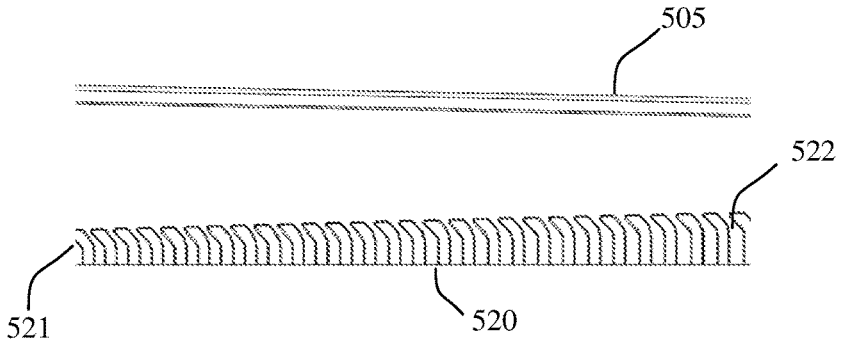

FIG. 5B

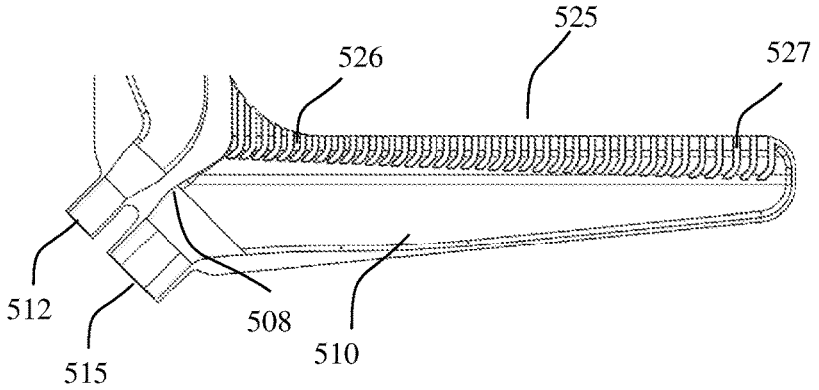

FIG. 5C

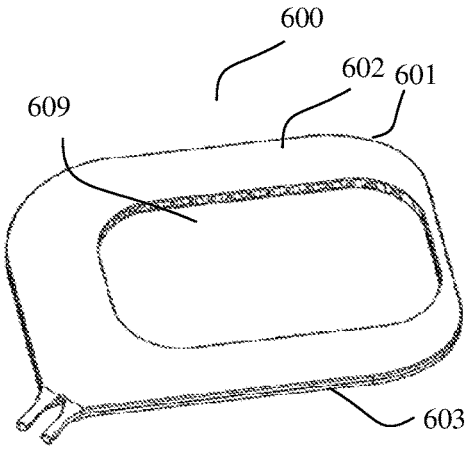

FIG. 6A

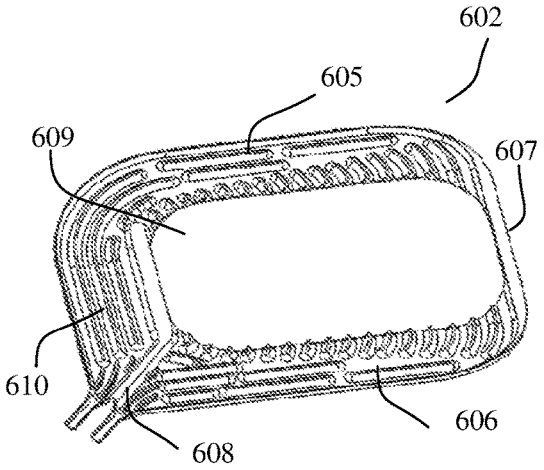

FIG. 6B

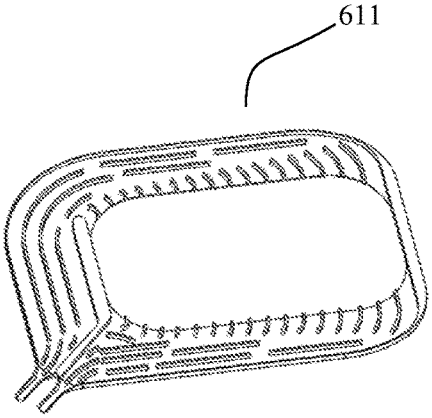

FIG. 6C

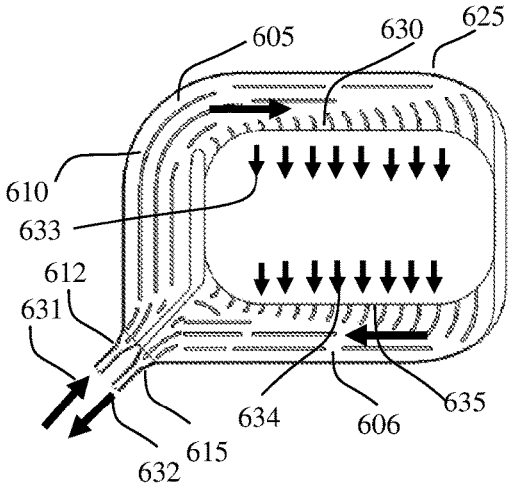

FIG. 6D

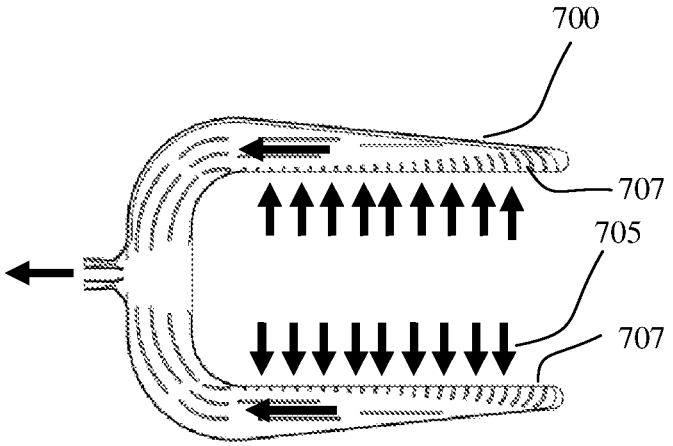

FIG. 7

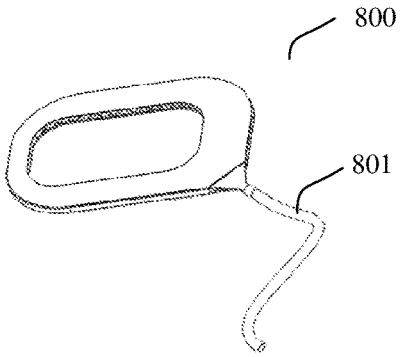

FIG. 8A

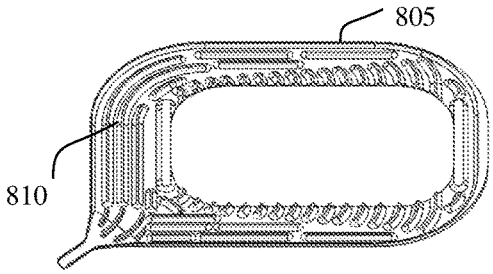

FIG. 8B

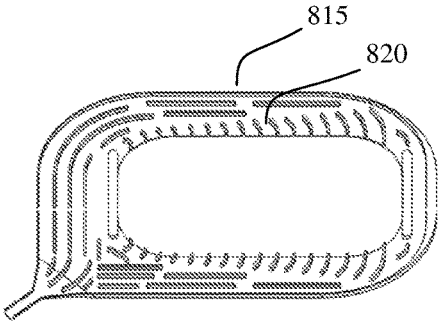

FIG. 8C

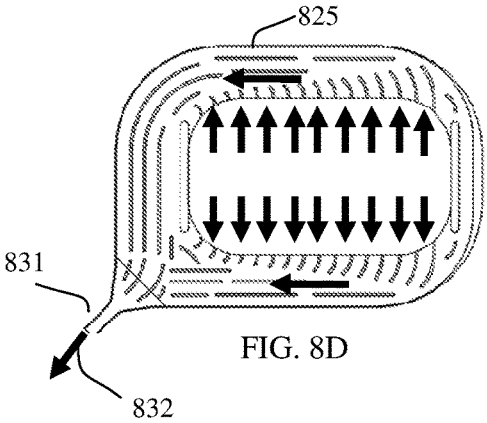

FIG. 8D

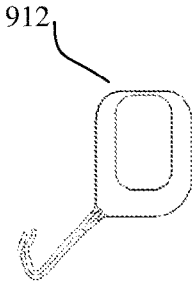

FIG.9A

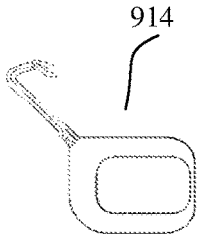

FIG.9B

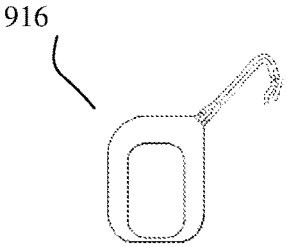

FIG.9C

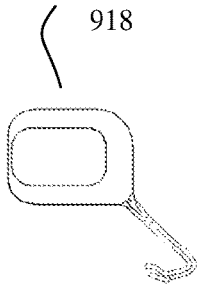

FIG.9D

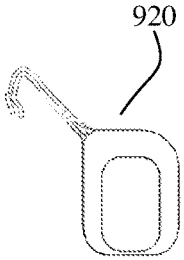

FIG.9E

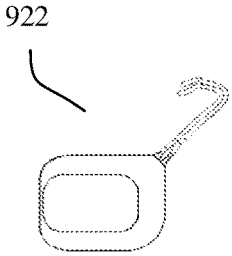

FIG.9F

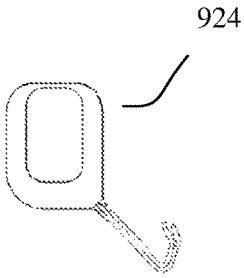

FIG.9G

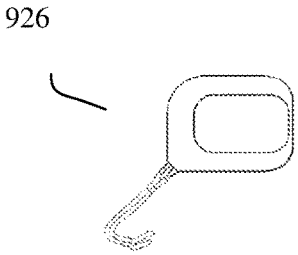

FIG.9H

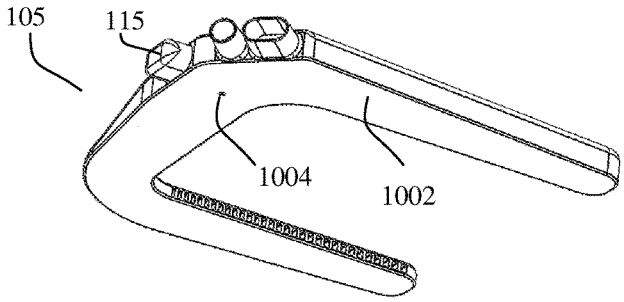

FIG.10A

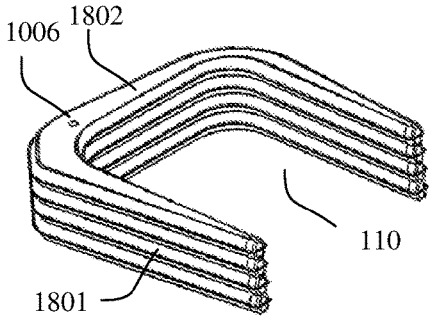

FIG.10B

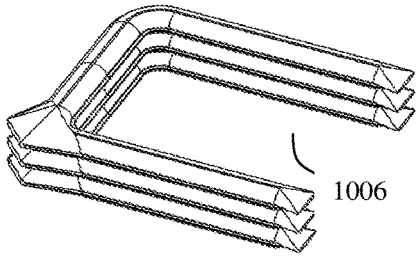

FIG. 10C

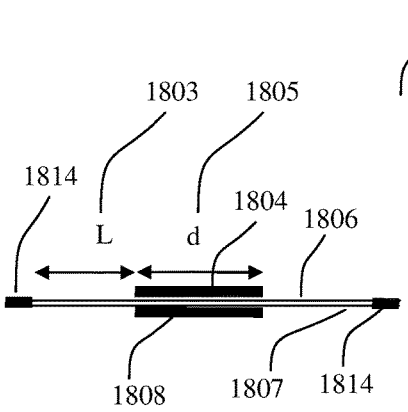

FIG. 10D

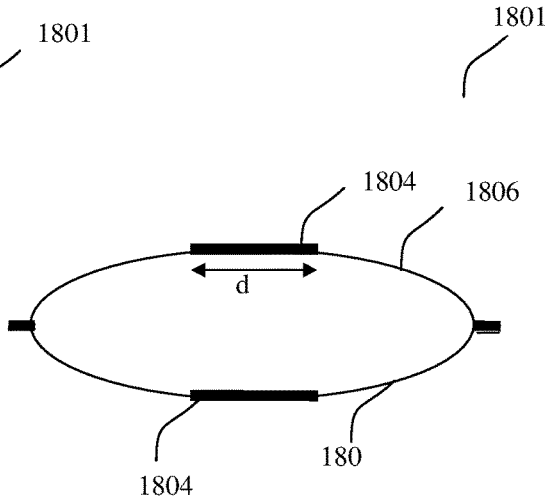

FIG. 10E

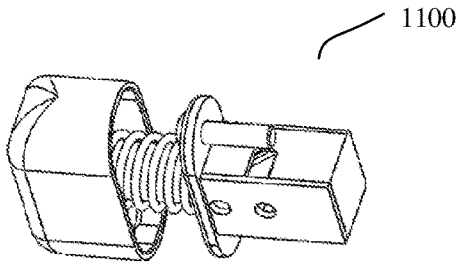

FIG. 11A

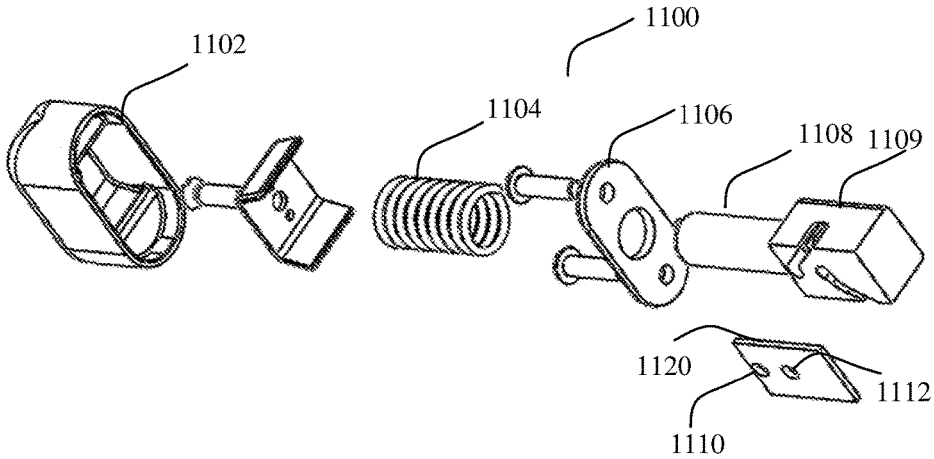

FIG. 11B

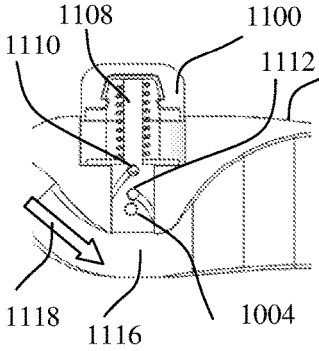

FIG. 11C

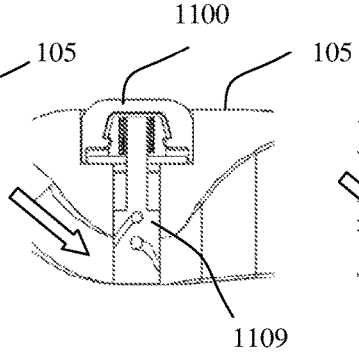

FIG. 11D

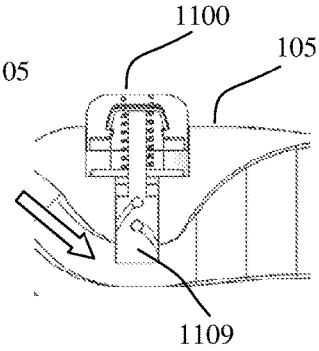

FIG. 11E

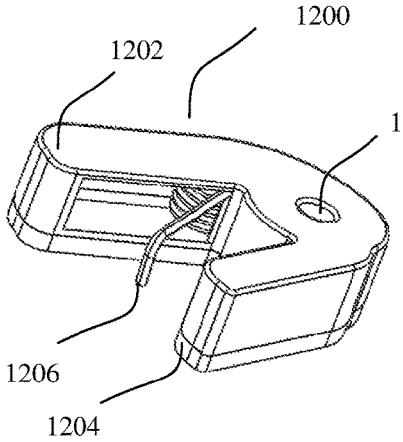

FIG. 12A

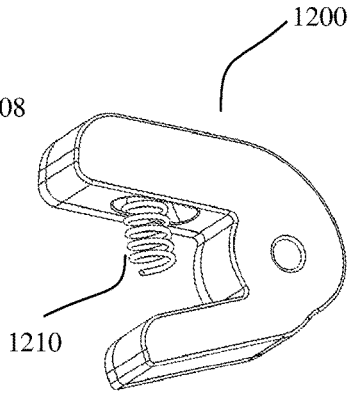

FIG.12B

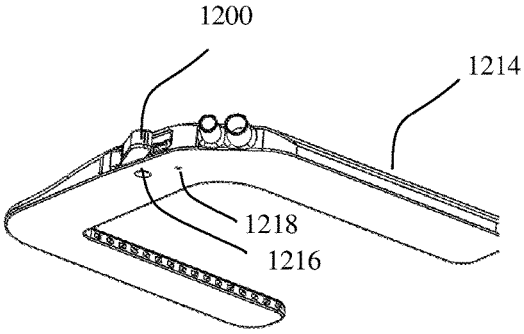

FIG.12C

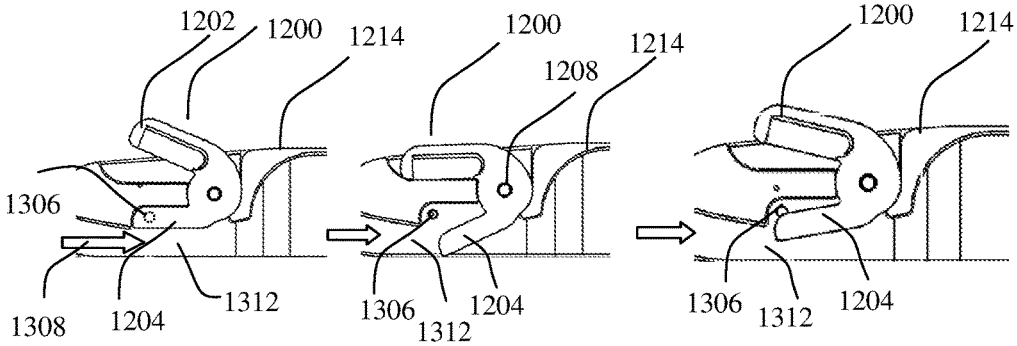

FIG. 13A FIG. 13B FIG. 13C

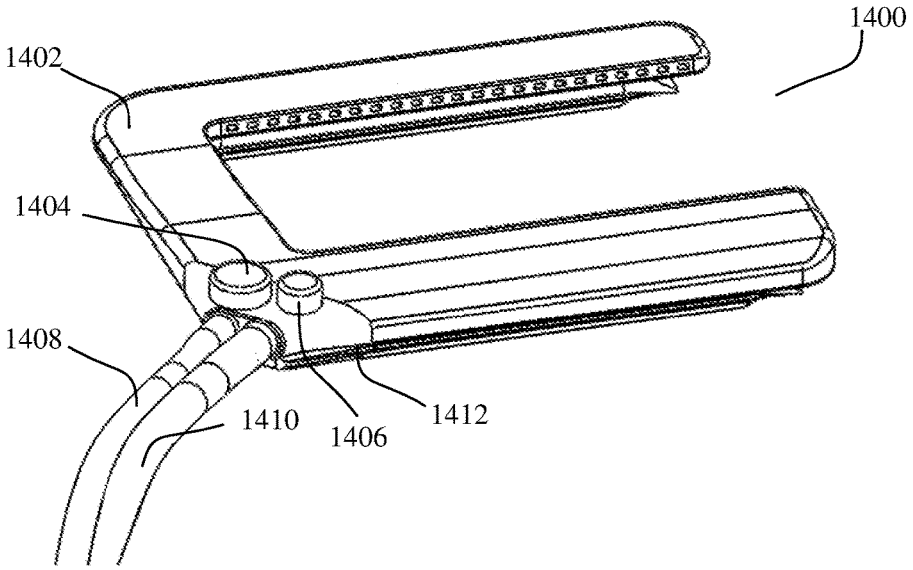

FIG. 14A

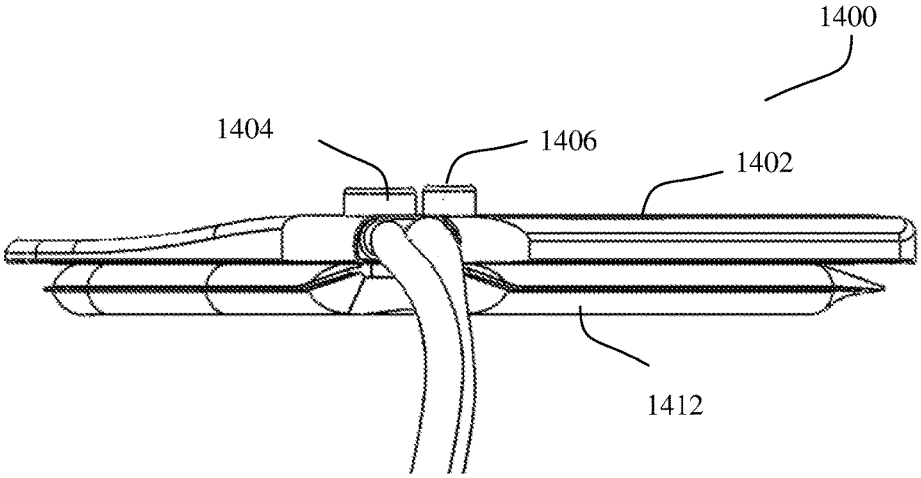

FIG. 14B

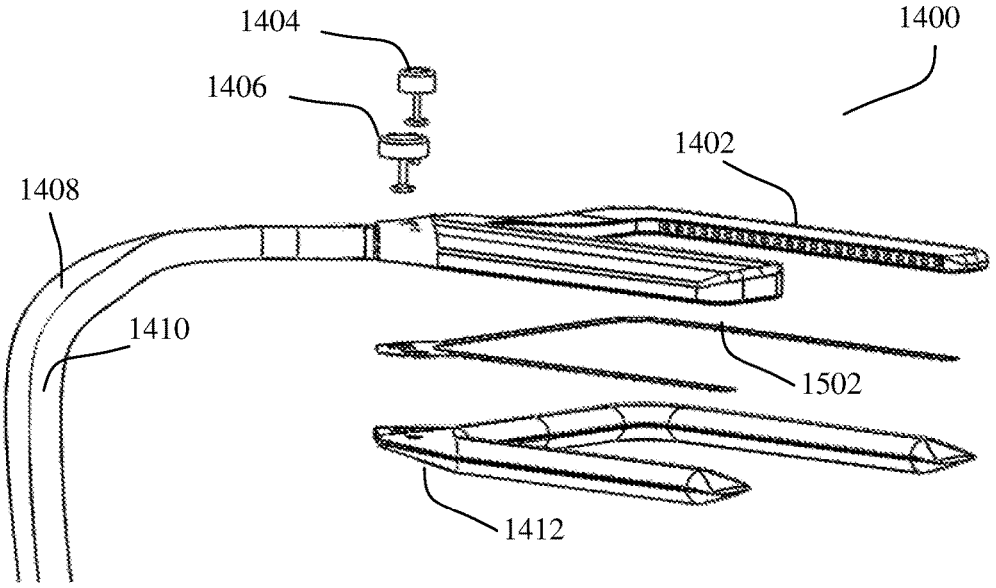

FIG. 15

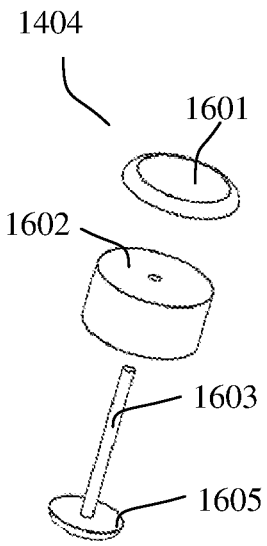

FIG.16A

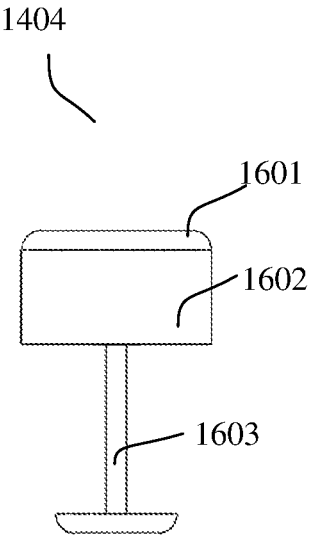

FIG.16B

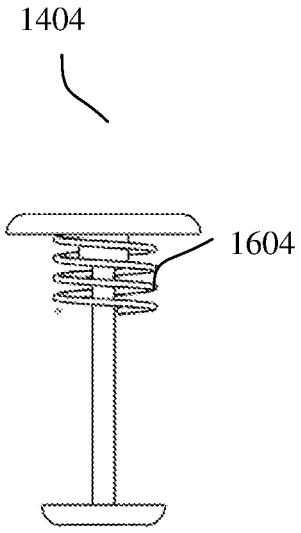

FIG.16C

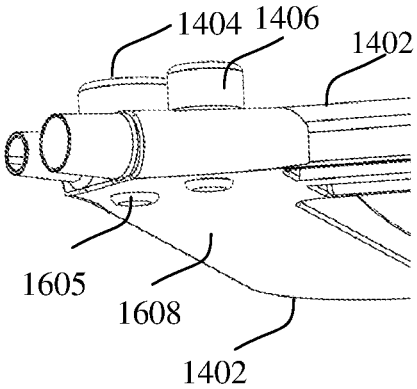

FIG.16D

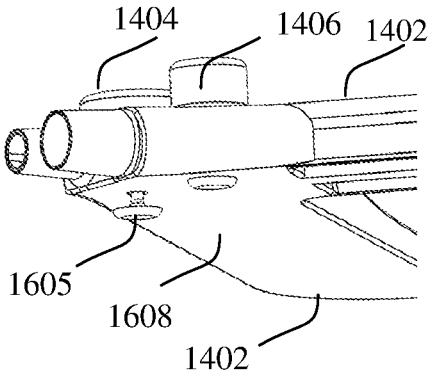

FIG.16E

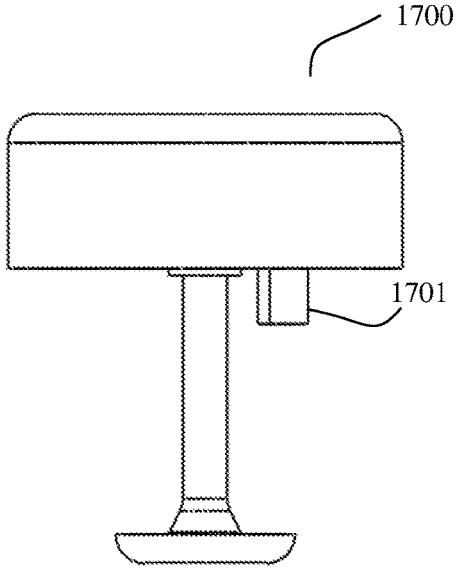

FIG. 17A

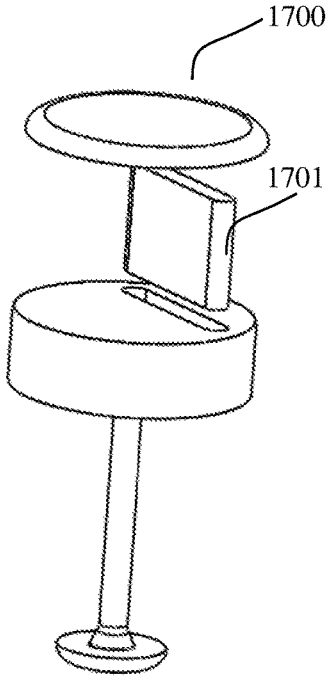

FIG. 17B

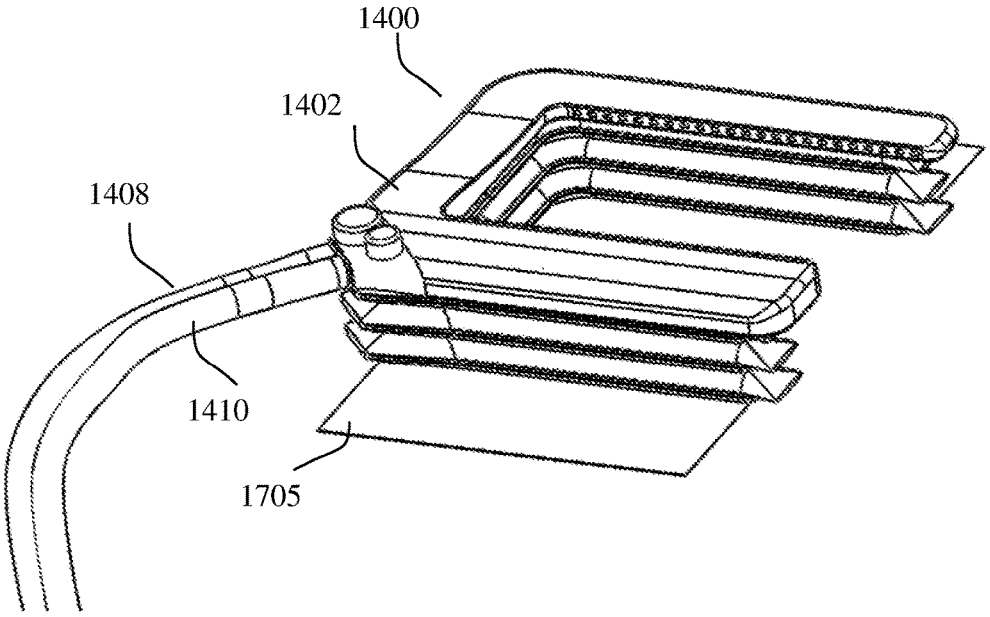

FIG. 17C

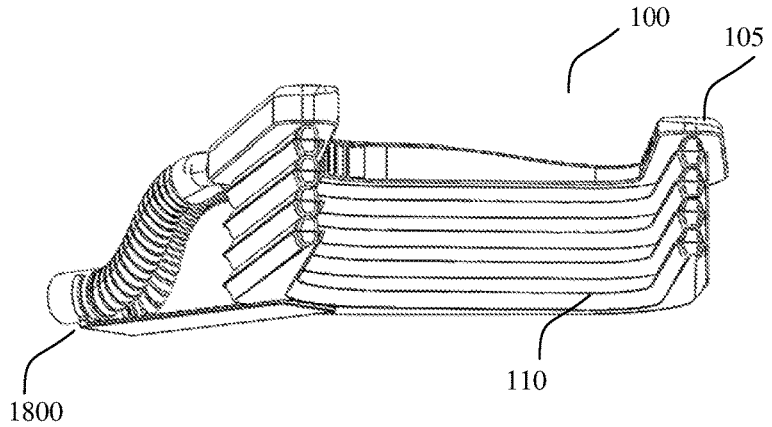

FIG. 18A

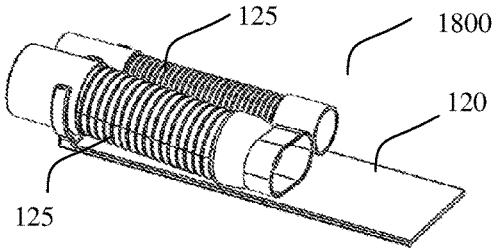

FIG. 18B

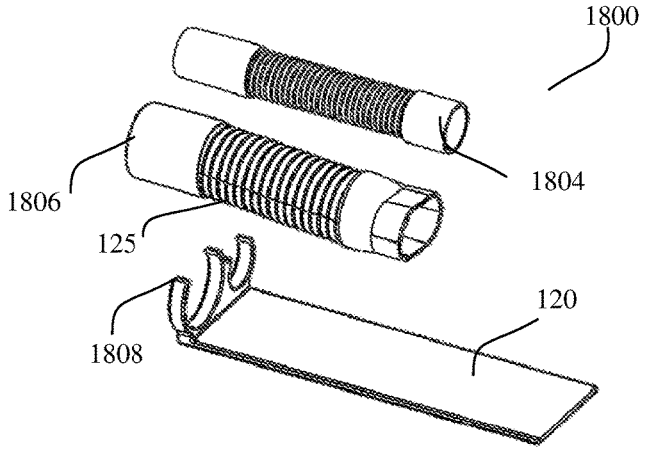

FIG. 18C

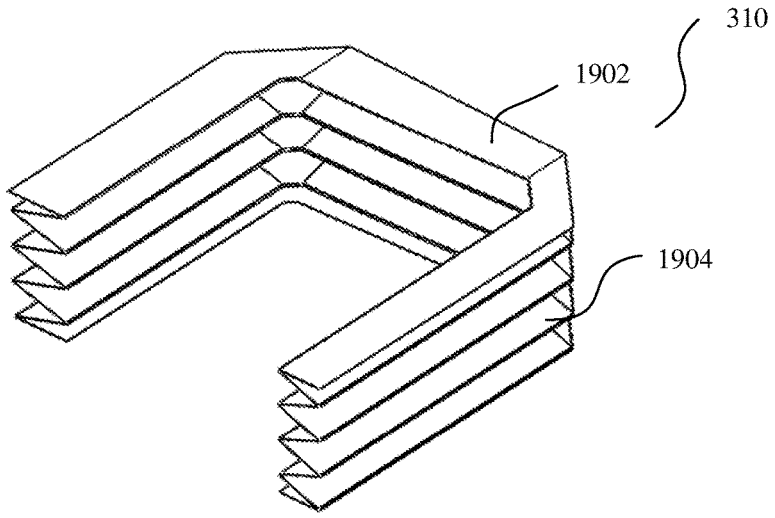

FIG. 19A

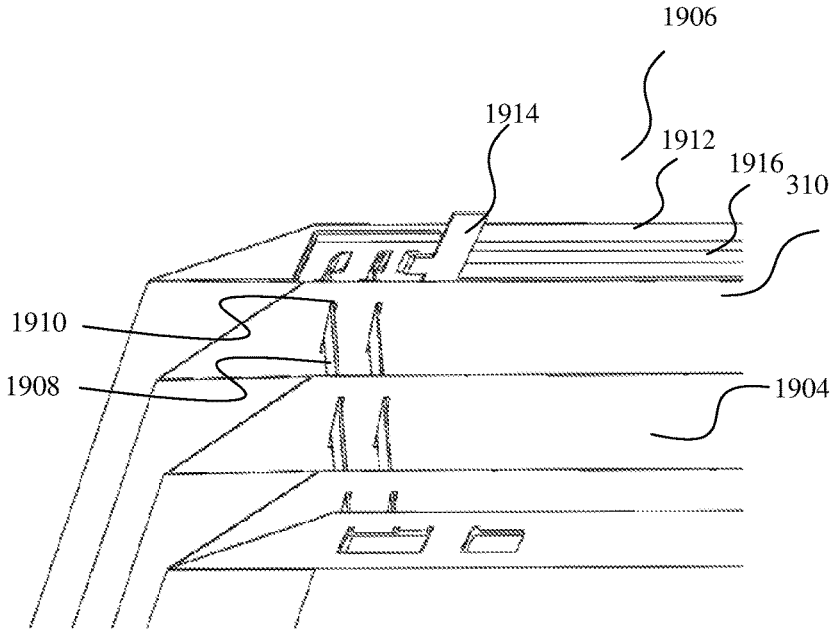

FIG. 19B

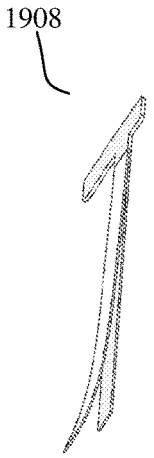

FIG. 20A

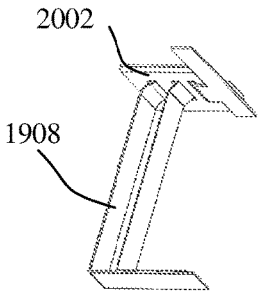

FIG. 20B

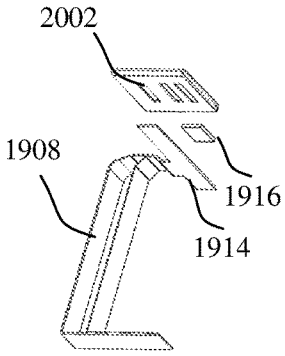

FIG. 20C

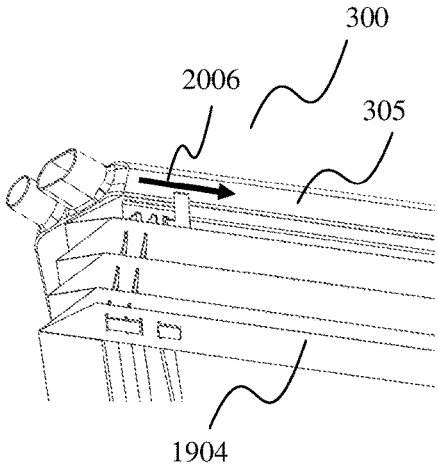

FIG. 20D

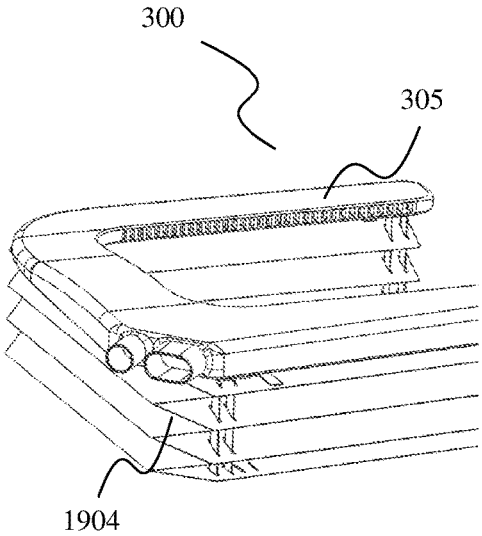

FIG. 20E

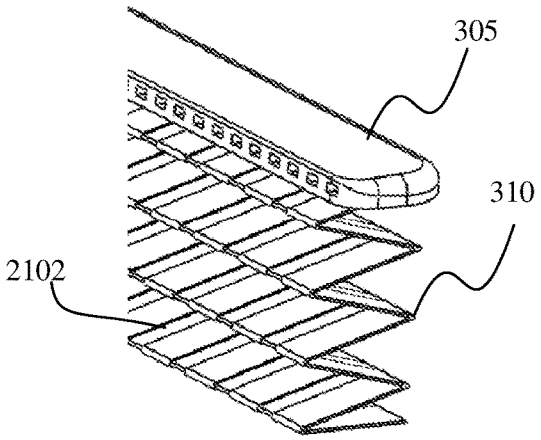

FIG. 21A

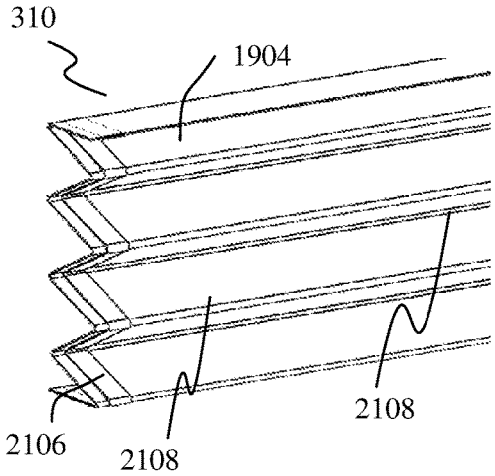

FIG. 21B

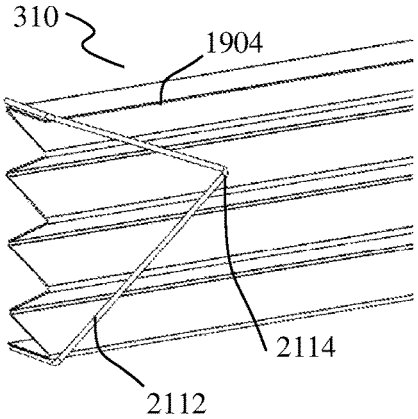

FIG. 21C

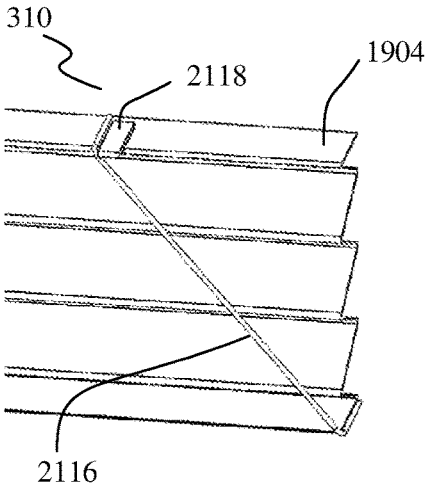

FIG. 21D

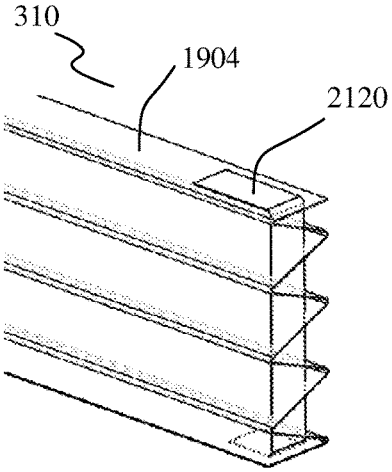

FIG. 21E

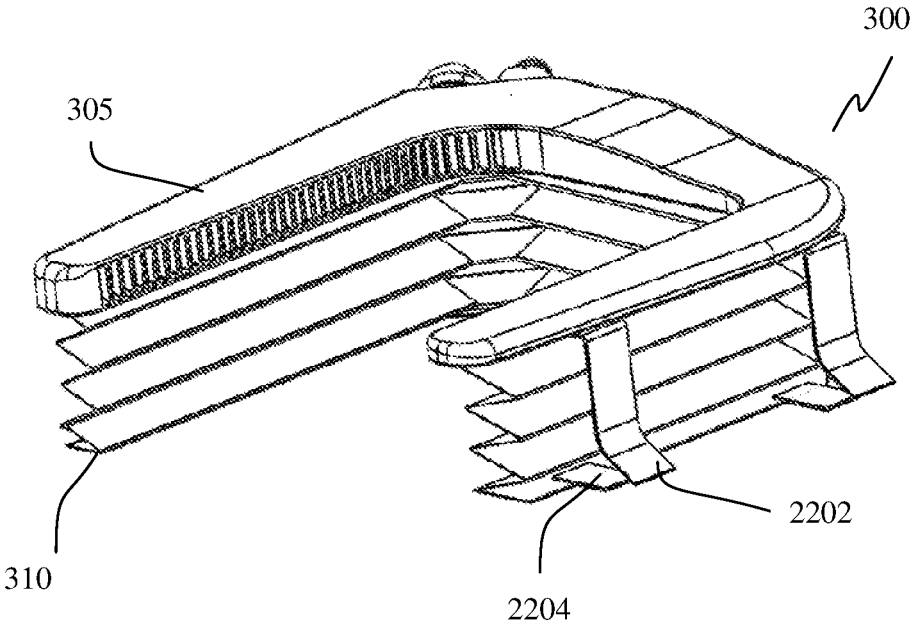

FIG. 22A

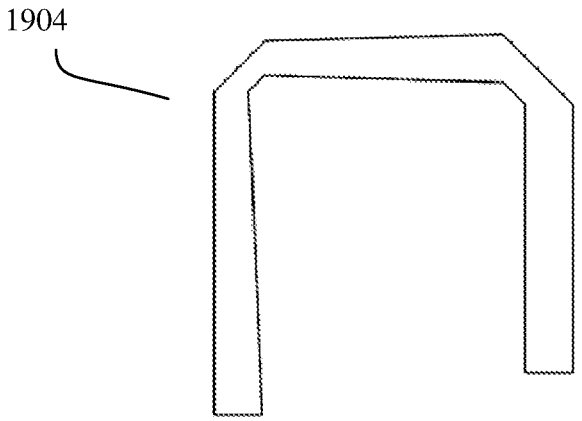

FIG. 22B

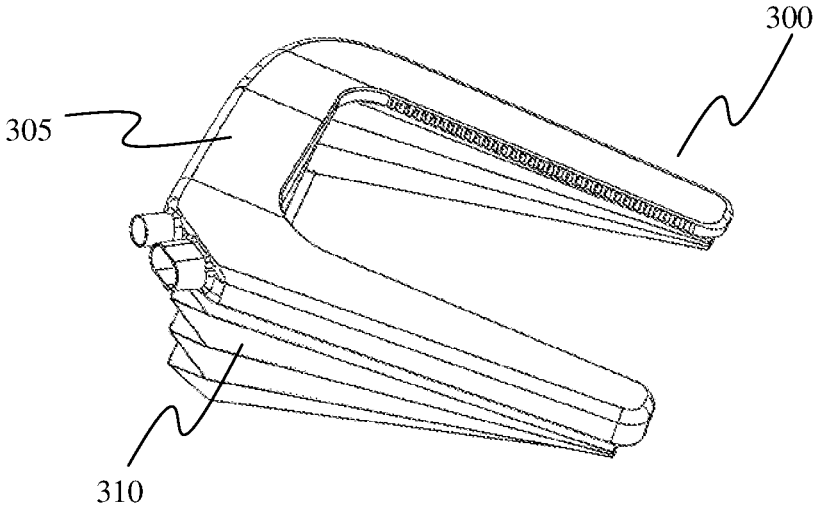

FIG. 23A

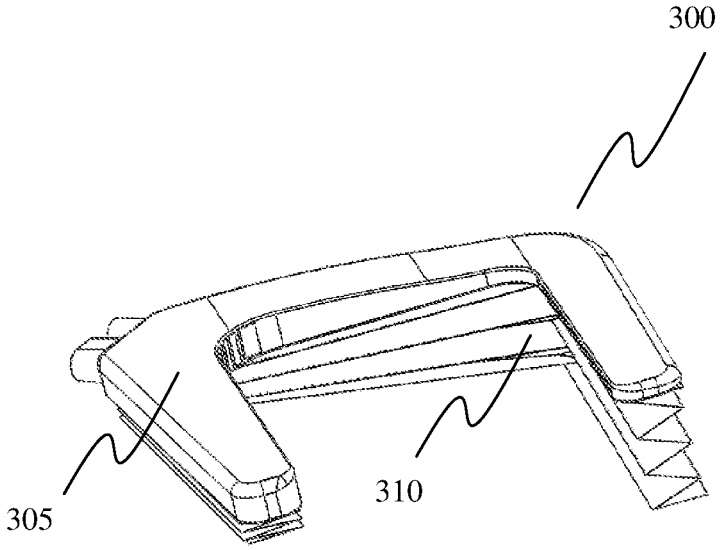

FIG. 23B

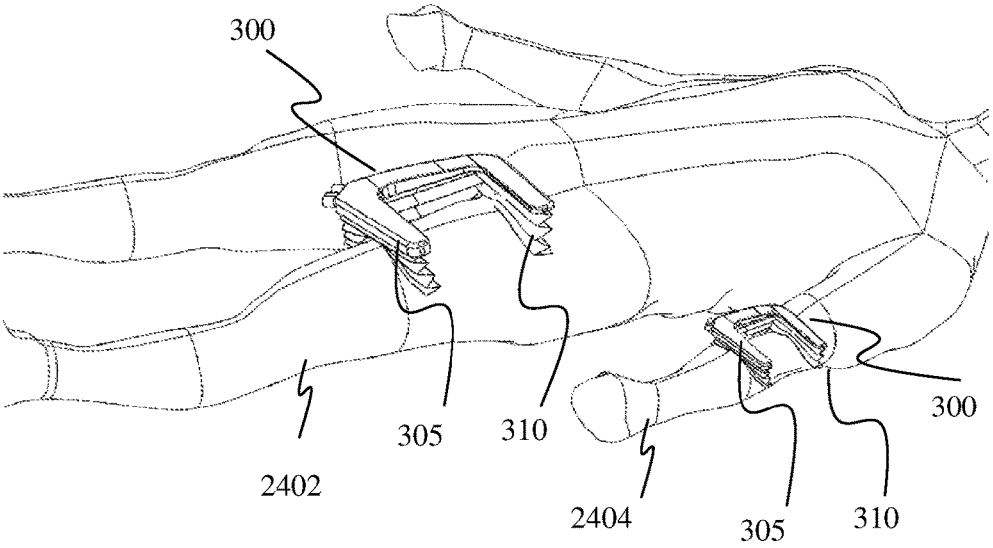

FIG. 24

SURGICAL GAS SHIELD MODULE WITH ELEVATION SYSTEM

CROSS REFERENCE TO RELATED APPLICATIONS

[0001] This Non-Provisional Utility Patent Application claims the benefit of the filing dates of U.S. Provisional Patent Application Ser. No. 62/171,357, filed on Jun. 5, 2015, U.S. Provisional Patent Application Ser. No. 62/203,550, filed on Aug. 11, 2015, and U.S. Provisional Patent Application Ser. No. 62/305,558, filed on Mar. 9, 2016, all of which are herein incorporated by reference.

TECHNICAL FIELD

[0002] The present invention generally relates to systems, devices and methods for assisting in evacuation of surgical by-products, such as plume, fumes, smoke, contaminants, odorous gases, living cells and viruses produced at a surgical site during electrosurgery (diathermy), laser beam, and ultrasonic device assisted surgery. More specifically, the present invention relates to system and method for an easy to use, efficient surgical gas shield which can be placed at a desired position based on the dimensional and topographical features of the surgical site.

BACKGROUND ART

[0003] At surgery sites, for protecting surgeons and operating room staff from diathermy or laser fumes, as well as other contaminants emanating from a surgical site, gas shields are used. The gas shields presently available are neither easy to use nor efficient in removing the contaminants and fumes from a surgical site. The existing gas shield devices sometime do not allow the surgeons to work easily on the surgery site. This is particularly so when a wide incision is required as the existing surgical shield devices make a closed loop around the surgery site. Another problem associated with most of the existing gas shield devices is that these devices evacuate the contaminants and fumes from a surgery site by use of vacuum and, in doing so, air from the body cavity at the surgery site gets drawn out and, also, localized evaporative cooling may occur at the surgery site. Another problem with existing devices is that some of them require a dedicated assistant to place the device in the desired location. In case of some surgeries, there may be certain factors such as topography of the surgery site and/or need to operate surgical devices etc. which necessitate the gas shield to be positioned little above the surgical site. For the same reasons the surgical gas shield may be required to be positioned at different plane of inclination. The existing gas shield devices do not address these problems.

[0004] Thus, there is a need to provide a surgical gas shield which is efficient, easy to use, gives surgeons' easy access to surgery site and can be positioned at a surgical site as per requirement.

OBJECTS OF THE INVENTION

[0005] An object of the present invention is to provide a portable surgical gas shield device which is efficient yet cost effective.

[0006] Another object of the present invention is to provide a surgical gas shield device which offers easy access to and better view of a surgery site.

[0007] Yet another object of the present invention is to provide an elevation system for a surgical gas shield device which can support non-uniform weight distribution of surgical gas shield module mounted on the elevation system.

[0008] Still another object of the present invention is to provide a surgical gas shield device which can be positioned at a plane elevated from the site of surgery parallel or inclined to the plane of surgery site at any desired angle.

[0009] Another object of the present invention is to provide a surgical gas shield device having a convenient mechanism for regulating gas pressure to adjust the elevation of the gas shield device from the surgery site.

[0010] Still another object of the present invention is to provide a surgical gas shield device having a single valve for gas flow control to inflating and deflating the elevation system of the device as per requirement.

[0011] Yet another object of the present invention is to provide a surgical gas shield device comprising a flexible expandable collapsible structure as support for elevating and maintaining the gas shield at a desired position.

[0012] Another object of the present invention is to provide a surgical gas shield device which can be positioned over any uneven body contour.

[0013] A further object of the present invention is to provide a surgical gas shield device having a non-inflatable type elevation system which is inexpensive yet convenient to use and effective.

[0014] Another object of the present invention is to provide a surgical gas shield device which stays stable on site free from push or pull which may be exerted by the suction/discharge tube during raising or lowering of the system or by gas pressure change.

[0015] Details of the foregoing objects and of the invention, as well as additional objects, features and advantages of the invention will become apparent to those skilled in the art upon consideration of the following detailed description of the preferred embodiments exemplifying the best mode of carrying out the invention as presently perceived.

BRIEF SUMMARY OF THE INVENTION

[0016] The following presents a simplified summary in order to provide a basic understanding of some aspects of the disclosed invention. This summary is not an extensive overview, and it is not intended to identify key/critical elements or to delineate the scope thereof. Its sole purpose is to present some concepts in a simplified form as a prelude to the more detailed description that is presented later.

[0017] The present invention is directed to a system and method for providing a shield or curtain of gas at a surgery site (also referred to as "surgical site" alternatively and interchangeably) to protect surgeons, operating staff and the patient from fumes and other contaminants generated during operating procedure such as diathermy, electrosurgery or laser. In a preferred embodiment, the discharge side of the gas shield module is configured to be connected to a positive pressure gas source while the suction side of the gas shield module can be connected to a negative pressure source. In some embodiments the gas shield module is configured to be operable in suction only mode. The surgical gas shield device of the present invention comprises a gas shield module to produce the gas shield and an elevation system which enables positioning of the gas shield module at a desired elevation and inclination. The elevation system also enables placement of the gas shield module over any uneven

body part of a patient. The present invention proposes several different embodiments for the gas shield module and the elevation system and, accordingly, the surgical gas shield device also has a number of embodiments. The gas shield module can be of a tuning fork type shape or it can be of a closed loop shape. The elevation system can be inflatable type or it can be a zigzag shaped flexible fold type which is not inflatable. The gas shield module which is mounted on an inflatable elevation system requires one or more regulating valves whereas no such valve or regulator is required in the gas shield module mounted on a zigzag shaped flexible fold elevation system. In different embodiments of the flexible fold elevation system, one or more different types of positioner mechanisms are provided which enable adjustment of the height and elevation of a gas shield module mounted on the elevation system as per requirement. Optionally, an anchorage mechanism can be provided in the surgical gas shield device using inflatable elevation system to isolate the surgical gas shield device from the push or pull that may be exerted by the positive pressure and negative pressure tubes connected to the gas shield module.

[0018] To the accomplishment of the foregoing and related ends, certain illustrative aspects of the disclosed invention are described herein in connection with the following description and the annexed drawings. These aspects are indicative, however, of but a few of the various ways in which the principles disclosed herein can be employed and is intended to include all such aspects and their equivalents. Other advantages and novel features will become apparent from the following detailed description when considered in conjunction with the drawings.

BRIEF DESCRIPTION OF DRAWINGS

[0019] In order to describe the manner in which features and other aspects of the present disclosure can be obtained, a more particular description of certain subject matter will be rendered by reference to specific embodiments which are illustrated in the appended drawings. Understanding that these drawings depict only typical embodiments and are not therefore to be considered to be limiting in scope, nor drawn to scale for all embodiments, various embodiments will be described and explained with additional specificity and details through the use of the accompanying drawings in which:

[0020] FIG. **1**A illustrates a surgical gas shield device in accordance with a first embodiment of the present invention;

[0021] FIG. **1**B illustrates a surgical gas shield device at elevated condition in accordance with the first embodiment of the present invention;

[0022] FIG. **2**A illustrates an exploded view of a surgical gas shield device in accordance with the first embodiment of the present invention;

[0023] FIG. **2**B illustrates an exploded view of a surgical gas shield device showing the elevation system in inflated condition in accordance with the first embodiment of the present invention;

[0024] FIG. **3**A illustrates a surgical gas shield device in accordance with a second embodiment of the present invention;

[0025] FIG. **3**B illustrates a surgical gas shield device with the elevation system in expanded condition in accordance with the second embodiment of the present invention;

[0026] FIG. **3**C illustrates a surgical gas shield device with the elevation system having an elevation adjustment mechanism (also referred to as positioner mechanism) in accordance with the second embodiment of the present invention;

[0027] FIG. **4**A illustrates a perspective view of the gas shield module of the surgical gas shield device in accordance with the first embodiment of the present invention;

[0028] FIG. **4**B illustrates top half or top wall of a gas shield module of the surgical gas shield device in accordance with the first embodiment of the present invention;

[0029] FIG. **4**C illustrates bottom half or a bottom wall of a gas shield module of the surgical gas shield device in accordance with the first embodiment of the present invention;

[0030] FIG. **5**A illustrates a top sectional view of gas shield module of the surgical gas shield device in accordance with the second embodiment of the present invention showing the flow channels and flow directions;

[0031] FIG. **5**B illustrates a section of the discharge chamber of a gas shield module of the surgical gas shield device in accordance with the first and second embodiments of the present invention;

[0032] FIG. **5**C illustrates a section of the suction chamber of a gas shield module of the surgical gas shield device in accordance with the first and second embodiments of the present invention;

[0033] FIG. **6**A illustrates a loop type gas shield module of the surgical gas shield device in accordance with an embodiment of the present invention;

[0034] FIG. **6**B illustrates a top sectional view of loop type gas shield module of the surgical gas shield device in accordance with an embodiment of the present invention;

[0035] FIG. **6**C illustrates a top sectional view of another embodiment of a loop type gas shield module of the surgical gas shield device;

[0036] FIG. **6**D illustrates a top sectional view of a loop type gas shield module of the surgical gas shield device showing gas flow directions in accordance with an embodiment of the present invention;

[0037] FIG. **7** illustrates a top sectional view of a suction only gas shield module of the surgical gas shield device in accordance with the second embodiment of the present invention;

[0038] FIG. **8**A illustrates a suction only loop type gas shield module of the surgical gas shield device in accordance with an embodiment of the present invention;

[0039] FIG. **8**B illustrates a top sectional view of suction only loop type gas shield module of the surgical gas shield device in accordance with an embodiment of the present invention;

[0040] FIG. **8**C illustrates a top sectional view of suction only another embodiment of a loop type gas shield module of the surgical gas shield device;

[0041] FIG. **8**D illustrates a top sectional view of a suction only loop type gas shield module of the surgical gas shield device showing gas flow directions in accordance with an embodiment of the present invention;

[0042] FIG. **9**A through FIG. **9**H illustrate various embodiments of the gas shield module of the surgical gas shield device of the present invention;

[0043] FIG. **10**A illustrates a bottom perspective view of a fork type gas shield module of the surgical gas shield device in accordance with the first embodiment of the present invention;

[0044] FIG. **10**B illustrates a top perspective view of an inflatable elevation system of the surgical gas shield device in accordance with an embodiment of the present invention;

[0045] FIG. **10**C illustrates a top perspective view of stacking arrangement of another embodiment of the inflatable elevation system of the surgical gas shield device;

[0046] FIG. **10**D illustrates a cross-sectional view of the inflatable elevation system gas cushion element in deflated state in accordance with an embodiment of the present invention;

[0047] FIG. **10**E illustrates a cross-sectional view of the inflatable elevation system gas cushion element in partially inflated state in accordance with an embodiment of the present invention;

[0048] FIG. **11**A is a perspective view of a push type valve used with the first embodiment of the present invention for regulating gas flow to inflate or deflate gas cushion elements of an inflatable elevation system;

[0049] FIG. **11**B is an exploded view of the push type valve of FIG. **11**A in accordance with an embodiment of the present invention;

[0050] FIG. **11**C illustrates a section of the gas shield module of first embodiment with the push type valve of FIG. **11**A at idle condition in accordance with an embodiment of the present invention;

[0051] FIG. **11**D illustrates a section of the gas shield module of the first embodiment with the push type valve of FIG. **11**A at fully actuated condition for inflating an inflatable type elevation system;

[0052] FIG. **11**E illustrates a section of the gas shield module of the first embodiment with the push type valve of FIG. **11**A at partially actuated condition for deflating an inflatable type elevation system;

[0053] FIG. **12**A illustrates a perspective view of a rocker type valve comprising a torsion spring for use in the gas shield module of first embodiment;

[0054] FIG. **12**B illustrates a perspective view of a rocker type valve of FIG. **12**A comprising a compression spring for use in the gas shield module of first embodiment;

[0055] FIG. **12**C is a bottom perspective view of a gas shield module of first embodiment fitted with a rocker type valve of FIG. **12**A;

[0056] FIG. **13**A is a sectional view of a part of a gas shield module with the rocker type valve in idle state in accordance with an embodiment of the present invention;

[0057] FIG. **13**B is a sectional view of a part of a gas shield module of first embodiment with the rocker type valve in gas cushion inflate mode in accordance with an embodiment of the present invention;

[0058] FIG. **13**C is a sectional view of a part of a gas shield module with the rocker type valve in gas cushion deflate mode in accordance with an embodiment of the present invention;

[0059] FIG. **14**A illustrates a perspective view of a surgical gas shield device having twin regulating valves for controlling the elevation produced by the inflatable elevation system in accordance with an embodiment of the present invention;

[0060] FIG. **14**B illustrates a side view of a surgical gas shield device having twin regulating valves in accordance with an embodiment of the present invention;

[0061] FIG. **15** illustrates an exploded perspective view of a surgical gas shield device having an elevation system with twin regulating valves in accordance with an embodiment of the present invention;

[0062] FIG. **16**A illustrates an exploded view of one of the twin regulating valves for the gas shield module of first embodiment;

[0063] FIG. **16**B illustrates front view of the valve of FIG. **16**A;

[0064] FIG. **16**C illustrates front view of the valve of FIG. **16**A showing position of a compression spring in accordance with an embodiment of the present invention;

[0065] FIG. **16**D illustrates a perspective view of a section of the gas shield module of first embodiment having twin regulating valves in accordance with an embodiment of the present invention;

[0066] FIG. **16**E illustrates a perspective view of a section of the gas shield module of the surgical gas shield device showing one of the twin regulating valves in action in accordance with an embodiment of the present invention;

[0067] FIG. **17**A illustrates another embodiment of one of the twin regulating valves of a gas shield module in accordance with an embodiment of the present invention;

[0068] FIG. **17**B illustrates exploded view of the valve of FIG. **17**A in accordance with an embodiment of the present invention;

[0069] FIG. **17**C illustrates use of adhesive sheet with a surgical gas shield device in accordance with an embodiment of the present invention;

[0070] FIG. **18**A illustrates an inflated elevation system holding the gas shield module at a raised position in accordance with an embodiment of the surgical gas shield device of the present invention;

[0071] FIG. **18**B illustrates perspective view of an anchorage mechanism for isolating the surgical gas shield device module from the push or pull forces which may be exerted by the pressure tube and the evacuation tube on the device;

[0072] FIG. **18**C illustrates exploded view of the anchorage mechanism for isolating the assembly of gas shield module and elevation system from the push or pull forces which may be exerted by the pressure tube and the evacuation tube on the assembly in accordance with an embodiment of the present invention;

[0073] FIG. **19**A illustrates flexible folds of flexible fold type elevation system in accordance with an embodiment of the present invention;

[0074] FIG. **19**B illustrates a section of the first embodiment of the flexible fold elevation system comprising a positioner mechanism having one or more positioner strips for controlling the elevation and inclination of the flexible folds in accordance with an embodiment of the present invention;

[0075] FIG. **20**A illustrates a positioner strip used in elevation system of FIG. **19**B for controlling the elevation and inclination of the flexible folds in accordance with an embodiment of the present invention;

[0076] FIG. **20**B illustrates a positioner mechanism used in elevation system of FIG. **19**B for controlling the elevation and inclination of the flexible folds in accordance with an embodiment of the present invention;

[0077] FIG. **20**C illustrates an exploded view of the positioner mechanism of FIG. **20**B in accordance with an embodiment of the present invention;

[0078] FIG. **20**D illustrates a bottom perspective view of the surgical gas shield device comprising a first embodiment of the flexible fold type elevation system;

[0079] FIG. **20**E illustrates a top perspective view of the surgical gas shield device comprising the first embodiment flexible fold type elevation system;

[0080] FIG. **21**A illustrates a second embodiment of the flexible fold type elevation system having a positioner mechanism for controlling the elevation and inclination of the flexible folds in accordance with an embodiment of the present invention;

[0081] FIG. **21**B illustrates a third embodiment of the flexible fold type elevation system having a mechanism for controlling the elevation and inclination of the flexible folds in accordance with an embodiment of the present invention;

[0082] FIG. **21**C illustrates a fourth embodiment of the flexible fold type elevation system having a mechanism for controlling the elevation and inclination of the flexible folds in accordance with an embodiment of the present invention;

[0083] FIG. **21**D illustrates a fifth embodiment of the flexible fold type elevation system having a mechanism for controlling the elevation and inclination of the flexible folds in accordance with an embodiment of the present invention;

[0084] FIG. **21**E illustrates a sixth embodiment of the flexible fold type elevation system having a mechanism for controlling the elevation and inclination of the flexible folds in accordance with an embodiment of the present invention;

[0085] FIG. **22**A illustrates the surgical gas shield device comprising an elevation system having one or more adhesive strips or tapes or fasteners or other means of attachment or re-attachment in accordance with an embodiment of the present invention;

[0086] FIG. **22**B is a top view illustrating a possible shape of the flexible fold type elevation system to enable positioning of gas shield module at a desired rest position while accommodating the variations in weight distribution of the gas shield module in accordance with an embodiment of the present invention;

[0087] FIG. **23**A illustrates a gas shield module of a surgical gas shield device positioned at an inclined plane with the help of a flexible fold elevation system in accordance with an embodiment of the present invention;

[0088] FIG. **23**B illustrates a gas shield module of a surgical gas shield device positioned at another inclined plane with the help of a flexible fold elevation system in accordance with an embodiment of the present invention; and

[0089] FIG. **24** illustrates surgical gas shield devices of various dimensions positioned on uneven contours of a patient's body.

DETAILED DESCRIPTION OF THE INVENTION

[0090] In the following detailed description, numerous specific details are set forth in order to provide a thorough understanding of the invention. However, it will be understood by those skilled in the art that the present invention may be practiced without these specific details. In other instances, well-known methods, procedures and components have not been described in detail so as not to obscure the present invention.

[0091] Embodiments of the present invention are described herein in the context of a system and method for providing a gas shield at a surgery site through a surgical gas shield device. The surgical gas shield device of the present invention can be positioned at an elevated place to suit the topographical and surgical requirements at a surgery site. A primary aim of the present invention is to protect surgeon and/or staff from diathermy or laser fumes. Other potential benefits include protecting operating room staff from contamination from the patient and to protect the patient from operating room borne contaminants.

[0092] The surgical gas shield device of the present invention comprises a gas shield module and an elevation system. The following detailed description refers to several embodiments of the surgical gas shield device of the present invention. Those of ordinary skill in the art will realize that the following detailed description of the present invention is illustrative only and is not intended to be in any way limiting. Other embodiments of the present invention will readily suggest themselves to such skilled persons having the benefit of this disclosure. For example, numerous embodiments of the surgical gas shield device of the present invention comprising different combinations of various embodiments of the gas shield module and elevation system may be consistent with the spirit of the invention herein. Reference will now be made in detail to implementations of the present invention as illustrated in the accompanying drawings. The same reference indicators will be used throughout the drawings and the following detailed description to refer to the same or like parts.

[0093] FIGS. **1**A, **1**B, **2**A & **2**B show first embodiment **100** of the surgical gas shield device of the present invention. The first embodiment device **100** comprises a gas shield module **105** and an elevation system **110**. The gas shield module **105** removes air borne byproducts such as e.g. fumes, toxic gases and vapors including benzene, hydrogen cyanide, formaldehyde, viruses and other contaminants produced during surgical procedures which use Lasers, diathermy, ultrasonic generators etc. The elevation system **110**, on which the gas shield module **105** is mounted, facilitates positioning of the gas shield module **105** at a plane elevated parallel or inclined to the plane of surgery site at any desired height. The surgical gas shield module **105** further comprises one or more regulating valves **115** and an anchorage system **1800**. The anchorage system **1800** includes one or more flexible tubes **125**.

[0094] FIGS. **3**A, **3**B & **3**C show a second embodiment **300** of the surgical gas shield device of the present invention. The second embodiment device **300** differs from the first embodiment device **100** mainly in terms of the elevation system used. In the second embodiment device **300**, the elevation system **310** comprises two or more zigzag-shaped or z-shaped paddings or flexible folds or bellows which are not inflatable unlike the elevation system **110**. Consequently, the gas shield module **305** does not require regulating valves which are required in the elevation system **110** of the first embodiment device **100**.

[0095] FIG. **4**A shows a gas shield module **105** from the first embodiment device **100**. According to an embodiment of the present invention, the gas shield module may be formed in an open fork shape as well as in a closed loop shape. In a preferred embodiment, a fork-shaped surgical air shield allows the air shield to be more easily adapted to the topography of a patient's body as well as providing better access to the surgical site by the surgeon. This adaptability is especially important when the surgical gas shield device is secured to an incision site at an area of the body that is not

flat, such as would be commonly encountered during surgery on a breast, knee, neck, leg, or arm. Except the presence of one or more regulating valves **115** in gas shield module **105**, the fork type gas shield modules **105** and **305** are similar in structure and are alternatively and collectively referred to as tuning-fork type gas shield module or fork type gas shield module. The fork type gas shield module **105** has a body housing **400** which includes a top wall **401** and a bottom wall **402**. In a preferred embodiment, the body housing **400** is made from rigid or semi rigid surgical grade plastic such as ABS, Nylon, PVC or any other suitable material which can provide structural rigidity without collapsing under vacuum. The top wall **401** and the bottom wall **402** are configured, when joined together, to define two chambers **412** and **414** separated from each other by complementary protruding sections **408** and **409** (shown in FIG. **4**B and FIG. **4**C) disposed inside the walls **401** and **402** respectively. The chamber **412** (hereinafter referred to as discharge chamber **412**) is provided with an inlet **403** adaptable for coupling with an external pressurized gas supply tube connected to a positive pressure source. Similarly, the chamber **414** (hereinafter referred to as suction chamber **414**) is provided with an outlet **404** adaptable for coupling with an external suction tube connected to a negative pressure source capable of creating partial vacuum. Optionally, a flow regulating valve **115** is disposed on the chamber **412**.

[0096] FIG. **4**B and FIG. **4**C show the fork type gas shield module **105** in two halves—top half **415** and bottom half **420**. As shown in FIG. **4**B and FIG. **4**C, the discharge chamber **412** and the suction chamber **414** are provided with multiple straight and/or arcuate/shaped/arched projections **422** on the inner sides so that, when assembled with the inner sides facing each other, the projections **422** on the opposite halves abut and complement each other to form one or more flow channels.

[0097] A plurality of projections **416** disposed on both the walls **401** and **402** on the inner periphery **405** of the discharge chamber **412** define a plurality of discharge ports **407** (**407** shown in FIG. **4**A). Similarly, on the opposite side of **405**, on inner periphery **406**, a plurality of projections **418** are disposed on both the walls **401** and **402** of the suction chamber **414** which define a plurality of suction ports.

[0098] As shown in FIGS. **4**A, **4**B and **4**C, the housing body **400** is configured to accommodate the flow regulating valve **115** in the discharge chamber **412** downstream to the inlet **403** in the gas flow direction. Mirror image projections on both the walls **401** and **402** abut to form one or more flow channels which facilitate regulation of gas flow through the discharge chamber **412** for inflating or deflating an elevation system **110** (**110** shown in FIG. **2**B) with the help of the regulating valve **115**.

[0099] FIG. **5**A illustrates a top sectional view of the gas shield module **305** of the second embodiment device **300**. As mentioned above, structurally both the gas shield modules **105** and **305** are the same except that the gas shield module **305** does not need the gas regulating valve **115** of the gas shield module **105** and, accordingly, the discharge chamber **505** does not have the special flow channel arrangement which the discharge chamber **412** has for the regulating valve **115** in the gas shield module **105**. Also, no vent or aperture is required in the gas shield module **305** for transmission of fluid to and from the elevation system which is required in case of the gas shield module **105**. The pressurized gas (air, nitrogen, carbon dioxide or any suitable sterile gas) enters the discharge chamber **505** from an external supply (not shown in the drawings) detachably attached to the inlet **512** in the flow direction **511**. The flow channels **507** disposed inside the discharge chamber **505** facilitate and guide the flow of gas with minimum pressure drop from inlet **512** to the discharge ports **520**. The pressurized gas then exits through the plurality of discharge ports **520** in the direction **513** and flows over the surgical site around which the surgical gas shield device of the present invention is placed. FIG. **5**B illustrates a section of the discharge chamber **505** with enlarged view of the plurality of discharge ports **520**. In a preferred embodiment, each of the individual ports of the discharge ports **520** comprises a curved wall section at the gas entry point and a straight wall section at the gas exit point so that the gas gets discharged through the discharge ports **520** in a direction **513** which is substantially perpendicular to the row of the discharge ports **520**. In another embodiment, the size of discharge ports **520** increases in a gradual manner from the proximal end **521** to the distal end **522** of the discharge chamber **505** to maintain a uniform or a desired pattern of flow characteristics of the flowing gas at the discharge ports by compensating pressure drop.

[0100] The suction chamber **510**, which is completely separated/isolated from the discharge chamber **505** by a wall **508**, is detachably connected through the outlet **515** with an external evacuation chamber (not shown in the drawings) maintained at a negative pressure or partial vacuum. Consequently, the suction chamber **510** remains at a negative pressure and tend to suck in the gas and other air borne byproducts of surgical procedures from outside through the plurality of suction ports **525** in the direction **514**. In a preferred embodiment, each of the individual ports of the suction ports **525** comprises a straight wall section at the gas entry point from outside and a curved wall section at the gas exit point inside the suction chamber **510** toward the outlet **515** so that the gas gets sucked in through the suction ports **520** in a direction **514**. In another embodiment, as shown in FIG. **5**C, the size of suction ports **525** increases in a gradual manner from the proximal end **526** to the distal end **527** of the suction chamber **505** to maintain a uniform or a desired pattern of flow characteristics of the flowing gas at the suction ports by compensating pressure drop. Also, preferably, the overall size or volume of the suction chamber **510** is made bigger than the size or volume of the section of the discharge chamber **505** having the discharge ports **520**. The overall suction area offered by the suction ports **525** can also be made more than the overall discharge area offered by the discharge ports **520**. The suction ports **525** suck in atmospheric gases and air borne byproducts of surgery from the surgery site in addition to the gas discharged through the discharge ports **520**. A bigger suction chamber **525** having greater suction area facilitates evacuation of this increased volume of gas and particles. The flow of gas from the discharge ports **520** to the suction ports **525** results in creation of a gas shield or gas curtain or gas barrier between the surgery site and the space above the gas shield on a plane roughly parallel to the plane of surgery site. The suction ports **525** remove the gas exiting through the discharge ports **520** together with any air borne byproducts of surgery such as smoke and particulates entrained by the stream of gas from the surgery site.

[0101] In the above description only one pattern for the air/gas flow channels is discussed with respect to the draw-

ings. However, it will be obvious to any person skilled in the art that other patterns and shapes of flow channels are also possible. The primary aim of the design is to achieve a desired flow pattern, such as equal air velocities at the discharge/suction ports or a velocity profile across the surgical site as desired. Tapers and/or shields can be added to the multitude of gas jet supply and suction ports to accommodate performance requirements of the air curtain produced and to prevent ingress of fluids into the surgical cavity. Factors affecting performance and dimensions of the air shield module include, but are not limited to, the absolute and the relative velocities at the supply/discharge ports and exhaust/suction ports, whether the air flow jets are laminar or turbulent, the angle of any tilt in those ports due to bending following the outer contours of the patients body, module and slot thickness as well as the supply and exhaust pressures and maximum flow rates that can be accommodated by the pressure and suction pump(s) used. Another design factor is the "Force Number" which is defined as the square root of the ratio of the momentum force of the fluid layer at its source of origin to the pressure force across the layer as it passes over the opening or area plane to be protected. An important factor to be considered in the detailed design of the gas shield module of the present invention is the effect of the interference caused by operating surgeons' hands, incisions retractors and tools used in the procedure. The proportions of the cavity can be varied to accommodate the surgical cavity and are partially dictated by air curtain performance governing parameters. The surgical gas shield device is intended to be produced in several sizes to suit the incision size. Incision sizes typically vary between 5 cm and 25 cm. Each size has suitably sized discharge and suction ports to accommodate the resulting air flow rates without excessive pressure drop. In one embodiment, the surgical gas shield device is designed to accommodate what is known as the Alexis Port that surrounds the surgical wound so that the air shield module is an integral or a retrofitting component of the Alexis Port.

[0102] FIG. **6**A illustrates a loop type (or closed loop type) gas shield module **600** which operates on the same working principle on which fork type gas shield modules **105** or **305** work depending on the selection of elevation system used with gas shield module. The loop type gas shield module **600** has a body housing **601** which includes a top wall **602** and a bottom wall **603**. The top wall **602** and the bottom wall **603** are configured to define, when joined together, a discharge chamber **605** and a suction chamber **606** separated from each other by a protruding section **608** disposed inside the wall **602** as shown in FIG. **6**B. FIG. **6**C illustrates another embodiment **611** of the gas shield module **600** which has a different inside flow channel arrangement. Structurally the loop type gas shield module **600** is similar to the fork type gas shield modules **105** or **305** with the difference that, unlike the fork type gas shield modules, in the loop type gas shield module **600** the discharge chamber **605** and the suction chamber **606** meet each other physically (but not in fluid communication) at the distal end of the gas shield module **600** to form a cavity **609**. As shown in FIG. **6**D, the pressurized gas (air, nitrogen, carbon dioxide or any suitable sterile gas) enters the discharge chamber **605** from an external supply (not shown in the drawings) detachably attached to the inlet **612** in the flow direction **631**. The flow channels **610** disposed inside the discharge chamber **605** facilitate and guide the flow of gas with minimum pressure drop from inlet **612** to the discharge ports **630**. The pressurized gas then exits through the plurality of discharge ports **630** in the direction **633** and flows over the surgical site around which the surgical gas shield device of the present invention is placed. The suction chamber **606**, which is completely separated/isolated from the discharge chamber **605** by a partition wall **608**, is detachably connected through the outlet **615** with an external evacuation chamber (not shown in the drawings) maintained at a negative pressure or partial vacuum. Consequently, the suction chamber **606** remains at a negative pressure and tend to suck in the gas and other air borne byproducts of surgical procedures from outside through the plurality of suction ports **635** in the direction **634**. In a preferred embodiment, each of the individual ports of the suction and discharge ports are designed to provide a smooth flow path for the discharged and sucked gases.

[0103] According to an embodiment of the present invention, reference to FIG. **7** and FIG. **8**A through FIG. **8**D, the gas shield module of the present invention may be configured to operate only with a suction or vacuum function (hereinafter referred to as suction only gas shield module). The suction only gas shield module has a single chamber which is used for drawing the air borne particles and gases into the gas shield module for evacuation through a single outlet. The suction only gas shield module offers the advantages of being usable with the air suction systems commonly found in modern operating rooms and eliminating the need to employ a separate device to produce the required pressurized gas. In this embodiment, only suction is produced at each of the ports (ports **707** of gas shield module **600** in FIG. **6** with suction in the direction **705**, for example) of the surgical air shield. Additionally, this embodiment of the gas shield module is simplified, as it only requires one tube (tube **801** of gas shield module **800** in FIG. **8**A for example) for suction, as opposed to the dual tube set-up required of the other primary embodiment. In the suction only gas shield module, a suction line (**801** of FIG. **8**A for example), such as the type commonly found in an operating rooms, may be used to generate the required suction force (partial vacuum). In some cases, the suction only embodiment of the surgical air shield may create a cooling effect as a result of the evaporation of fluids in the vicinity of surgical site. In general, the suction only embodiment of the surgical air shield will be used with narrower incision sites, as the dual function embodiment of the surgical air shield can generally accommodate wider incision sites relative to the suction only version.

[0104] According to an embodiment of the present invention, the surgical air shield is adaptable to be placed in a variety of positions at a surgery site. In a preferred embodiment, placement of the gas shield module is flexible as the module may be designed to have a middle plane of symmetry. As shown in FIGS. **9**A through **9**H, the gas shield module can be rotated to any desired position/orientation **912**, **914**, **916**, **918**, **920**, **922**, **924** and **926** so that the tubing will extend from any suitable location that will cause minimal interference with the procedure being performed. While in some embodiments the gas shield module may be secured directly to the patient's body, in others the surgical air shield will be secured on the draping system used for the surgical procedure. One of ordinary skill in the art would appreciate that the surgical air shield could be usefully attached in a variety of locations, and embodiments of the

present invention are contemplated to be used in any such location. In some embodiments, the surgical gas shield may be disposable, while in other embodiments, the surgical air shield may be reusable.

[0105] FIG. **10**A illustrates a bottom perspective view of a tuning fork type gas shield module **105** which can be mounted on an inflatable type elevation system **110**. The gas shield module **105** is provided with an aperture **1004** on the bottom wall **1002**. The inflatable elevation system **110** comprises one or more gas cushion elements **1801** stacked one over another. Each of the gas cushion elements **1801** comprises two thin and flexible sheets of any suitable material that is flexible and gas impermeable, including, but not limited to polyethylene, PVC, polypropylene or any other suitable plastic material, rubber, paper or fabric. In the preferred embodiment, the selected material is chosen to withstand the maximum pressure that would be required to raise and withstand the weight of the gas shield module into an elevated position. Reference to FIG. **10**D, according to an embodiment of the present invention, two sheets **1806** and **1807** of a gas cushion element **1801** are joined together (exemplary joint **1814** is shown in FIG. **10**D) using any suitable bonding means, including, but not limited to, thermal welding, ultrasonic welding, adhesive sheets, or a glue or similar adhesive. In a preferred embodiment, on the top surface **1802** (FIG. **10**B) of the uppermost gas cushion element one or more vents/apertures **1006** may be provided. The one or more vents **1006** connect, in fluid communication, the uppermost gas cushion element with a gas shield module mounted on the elevation system. The apertures **1004** and **1006** are provided in such a way that, when the gas shield module **105** is mounted on the elevation system **110**, the apertures **1004** and **1006** align with each other. Also, the one or more gas cushion elements of the inflatable elevation system remain in fluid communication with each other among themselves. Thus, as per requirement fluid can transmit in and out of the inflatable elevation system from and to the gas shield module mounted on the inflatable elevation system.

[0106] According to a preferred embodiment of the present invention, the gas cushion can be made using two identical paper, rubber, plastic or fabric sheets. In an alternate preferred embodiment, the gas cushion can be made from a single sheet folded in a particular manner. Furthermore, the gas cushion can be made using commercially available bellows made in a variety of different materials such as plastic, rubber or fabric.

[0107] FIG. **10**C illustrates a top perspective view of a stacking arrangement of another embodiment of the inflatable elevation system of the surgical gas shield device. The dimension and design of the inflatable elevation system depend on many of factors. FIG. **10**D illustrates a cross-section of a cushion element **1801** of an elevation system **110** or **1006** (FIGS. **10**B and **10**C) in deflated condition. The gas cushion element **1801** is in contact with two other gas cushion elements in the stack above and below it and the width "d" of the contact surfaces **1804** with the cushion elements above and below the cushion element **1801** is marked as **1805** in FIG. **10**D. The two walls (**1806** and **1807**) of the cushion element **1801** are welded or joined together by any suitable means at the ends. The width "L" between the contact surfaces **1804** and joints **1802** is shown as **1803**. When gas cushion elements of inflatable elevation system are fully pressurized, the shape of the elements is dictated by cushion geometry and wall stresses (as the elements try to assume the shape of a full circle subject to flat contact surface constraints). The maximum height of elevation achieved by the elements will be primarily determined by the distance "L" between the welds and the contact interface.

[0108] However, as illustrated in FIG. **10**E, when the gas cushion element **1806** is partially pressurized, the elevation and shape of the gas cushion element get adjusted to achieve static equilibrium. This leads to the result that, during the process of inflation, at a particular short lengthwise element section, since the pressure remains same throughout the gas cushion element, the contact width "d" indicated by **1805** should be proportional to the weight of the gas shield module for that length of the gas shield module in that particular gas cushion element. Consequently, parameter "L", the width between the contact area and the welds, determines the height the gas cushion element attains under a given pressure. Height of the elevation system increases if "L" is increased and vice-versa.

[0109] According to an embodiment of the present invention, the shape of the gas cushion elements and the distance between the joints **1814** can have a variety of values. In a preferred embodiment, it is possible to make the width variable with the aim of having a gas cushion that would result in elevation to a plane that is inclined at an angle to the original plane of the platform when the gas cushion is deflated. As shown in FIG. **10**B and FIG. **10**C, the dimensions of the gas cushion elements of the elevation systems **110** or **1006** can be shaped to suit a particular application so that the final desired elevation is achieved. One of ordinary skill in the art would appreciate that there are many ways to stack and arrange the gas cushion elements for proper height adjustment for a particular application, and embodiments of the present invention are contemplated for use with any such arrangement of gas cushion elements.

[0110] Similarly, for a constant rate of elevation of gas cushion elements with pressure (in other words, on a plane that is parallel to the original plane of the elevation system when the gas cushion elements are deflated), the difference in width between the contact area between consecutive gas cushion elements and the welds should be constant. In general, the gas shield module **105** of FIG. **10**A has variable weight distribution along its body. As illustrated in FIG. **10**B the shape of the gas cushion elements of the elevation system **110** is accordingly designed to support the variable weight distribution of the gas shield module **105**. The profile of the adhesive sheet or joined surfaces of the gas cushion elements match the profile of the gas shield module **105** while keeping the width "L" constant throughout the area of contact in a preferred embodiment.

[0111] Therefore, when designing the gas cushion elements and the shape of the adhesive/contact area between them, consideration will have to be made for the weight distribution of the gas shield module which the cushion supports. Knowing the weight distribution of the gas shield module would therefore enable the shape of the gas cushion elements or, to that effect, dimension of the elevation system, to be determined for a desired inclination of elevation with pressure.

[0112] In some embodiments, in an inflatable type of elevation system, a single valve or actuator can be used for pressurizing or depressurizing the inflatable elevation system of the present invention. In such embodiments, only one aperture is needed in the gas shield module as well as in the

gas cushion element for transmission of fluid between the gas shield module and the gas cushion elements.

[0113] FIG. **11**A illustrates a push type valve (the terms "valve", "regulator" and "actuator" are used alternatively and interchangeably) **1100**. As shown in FIG. **11**B, the push type valve **1100** comprises a knob **1102**, a spring **1104**, a mounting bracket **1106**, a valve body **1108**, a valve head **1109** and a seal **1120**. The mounting bracket **1106** allows to secure the valve **1100** to the positive pressure flow channel **1116** in the body of the gas shield module **105** as shown in FIG. **10**A. In idle condition, the spring **1104** forces the valve body **1108** to stay away from the flow channel **1116** without obstructing the flow of gas in the channel **1116** as shown in FIG. **11**C. Arrow **1118** shows the direction of flow of gas to the gas shield module **105** through the channel **1116**. A user can manually press the knob **1102** to push the valve body **1108** down in to the flow channel **1116** as shown in FIG. **11**D which obstructs the flow of gas in the channel **1116**. The seal **1112** is a simple pad that comprises of two apertures **1110** and **1112** which correspond to the apertures provided on the valve head **1109**. At a completely pushed down condition, as in FIG. **11**D, the upper aperture **1110** aligns with the aperture **1004** (aperture **1004** is also shown in FIG. **10**A) provided on the body of the gas shield module **105**. In this state, the pressurized gas flowing in the channel **1116** finds way to the inflatable elevation system attached underneath the gas shield module **105** through the aperture **1110** of the valve body **1109** and aperture **1004** of the gas shield module **105** to inflate the gas cushion of the elevation system **110** (shown in FIG. **10**B). If the push valve **1100** is pressed half-way down, the valve head **1109** slides across the flow channel **1116** only partially and the aperture **1112** aligns with the aperture **1004** of the gas shield module **105** as shown in FIG. **11**E. In this state, the flow path between the elevation system and the flow channel **1116** gets connected to the downstream side of the flow which gets throttled by the partially obstructing valve head **1109**. The throttling effect makes a pressure difference between the inflated gas cushion side and the downstream of flow channel **1116** side with the pressure in the flow channel **1116** being lesser than the elevation system **110**. This makes the gas from the inflated elevation system flow back into the flow channel **1116** deflating the gas cushion elements of the elevation system **110** and therefore lowering the gas shield module.

[0114] In the present embodiment, the valve components are made of suitable plastic materials but can obviously be made of any suitable materials that meet cost and production requirements. The sealing pad **1120** should preferably be made of a soft material that can perform the sealing action and has a low friction coefficient. This would reduce the force needed to actuate the valve and the stiffness of the corresponding spring **1104**.

[0115] The valve **1100** can be sized to suit the size of the shield module in which it is used. The pressure transmission hole can be made of such a size to reach a compromise between the speed of actuation and sealing requirements. In alternative embodiments, the valve **1100** may be actuated electrically, remotely or by any other suitable means.

[0116] In another embodiment, a single rocker type valve **1200** is provided in the gas shield module of first embodiment surgical gas shield device to control gas flow between the gas shield module and the gas cushion elements of inflatable elevation system similar to the way push type valve **1100** does. The rocker type valve **1200** comprises an actuation arm **1202**, a sealing arm **1204**, and as shown in FIGS. **12**A and **12**B, a torsion spring **1206** or a compression spring **1210** used to make the rocker type valve **1200** return to the original idle position as shown in FIG. **13**A. The actuation arm **1202** and the sealing arm **1204** together make a substantially V-shaped or U-shaped body with an aperture **1208** being provided in the body where the actuation arm **1202** and the sealing arm **1204** meet each other. The rocker type valve **1200** is pivotally attached to the gas shield module **1214** with the help of a fastener passing through the aperture **1208** of the rocker type valve and aperture **1216** of the gas shield module **1214**. At idle position, as shown in FIG. **13**A, the actuation arm **1202** juts out of the gas shield module **1214** and the sealing arm **1204** remains clear of the gas flow channel **1312** through which pressurized gas flows in the direction **1308**. At this position of the rocker type valve **1200**, the sealing arm **1204** completely covers and seals the aperture **1306** provided on the body of the gas shield module **1214**. The aperture **1218** is provided, as shown in FIG. **12**C, on the side of the gas shield module **1214** to which the gas cushion elements of the elevation system are attached. Thus, when the actuation arm **1202** is pressed down, as shown in FIG. **13**B, the sealing arm **1204** pivots around **1208** and obstructs the flow channel **1312** while exposing the aperture **1306** to the upstream gas flow in the flow channel **1312**. The pressurized gas flows to the gas cushion element attached to the gas shield module **1214** through the aperture **1306** and inflates the gas cushion of the inflatable elevation system **110** (inflatable elevation system **110** shown in FIG. **10**B. When the rocker type valve **1200** is pressed partially, as shown in FIG. **13**C, the sealing arm **1204** throttles the gas flow in the flow channel **1312** and the reduced flow pressure in the downstream makes the gas flow back from the inflated gas cushion elements to the flow channel **1312** through the aperture **1306** deflating the gas cushion and lowering the gas shield module.

[0117] The valve **1200** can be sized to suit the size of the gas shield module in which it is used. The pressure transmission hole/aperture **1306** can be made of such a size to reach a compromise between the speed of actuation and sealing requirements. In alternative embodiments, the valve **1200** may be actuated electrically, remotely or by any other suitable means.

[0118] Reference to FIG. **14**A and FIG. **14**B, in one embodiment **1400** of the surgical gas shield device, two separate regulating valves **1404** and **1406** can be provided in the discharge chamber (connected to the positive pressure line **1408**) and suction chamber (connected to negative pressure line **1410**) of a gas shield module **1402** respectively. Inflation or deflation of the elevation system **1006** can be controlled by the valves **1404** and **1406** respectively. Exploded view of the surgical gas shield device **1400** illustrated in FIG. **15** shows an exemplary adhesive layer **1502** which can be used for joining the gas shield module **1402** with the inflatable elevation system **1412**.

[0119] FIG. **16**A illustrates exploded view of the valve **1404** used with the gas shield module **1402** of FIG. **15** to actuate inflation and deflation of the gas cushion, in accordance with an embodiment of the present invention. Although, only one valve **1404** is shown in FIGS. **16**A, **16**B and **16**C, it is to be understood that, structurally and functionally, valve **1406** is similar to valve **1404** with probable difference in dimensions only. In one embodiment, the valve **1404** may comprise a button **1601**, a spring material **1602**,

a spindle **1603** and a valve seat **1605**, as shown in FIG. **16**A. These components can be made of any suitable material, including, but not limited to, metal or plastic. As shown in FIG. **16**D, in a preferred embodiment, the spindle **1603** passes through the positive or negative pressure regions of the gas shield module **1402** and the seat **1605** seals an outlet/aperture/vent provided on the lower wall **1608** of the gas shield module **1402** from outside. When the valve button **1601** is pressed, as shown in FIG. **16**E, the spindle **1603** is lowered and the valve seat **1605** moves down to expose the vent provided on the gas shield module **1402** to the adjoining gas cushion element of the elevation system. This allows transmission of fluid between the gas cushion elements of the elevation system and the gas shield module. In a preferred embodiment, the valve button **1601** is manually pressed for activation. In alternate embodiments, the valve button may be actuated electrically, remotely or by any other suitable means.

[0120] In situations where the pressure resistance in the gas shield module is low and the pressure generated inside the elevation system to inflate the gas cushion elements is not sufficient, a number of solutions can be used. An illustrative example of one such solution is shown in FIG. **17**A, which is designed to increase the pressure available to inflate the gas cushion elements by blocking the flow of gas to the surgical gas shield. As shown in FIG. **17**A, the valve **1700** is provided with a blocking component **1701**. In a preferred embodiment, the blocking component **1701** is arranged to move up and down to block the flow of gas feeding the gas shield module in the internal flow channels. In an alternate embodiment, the main pressurizing region blocking component **1701** can be arranged to rotate and block the flow of gas feeding the gas shield module. In a preferred embodiment, to reduce the possibility of gas leaks from the gas cushion element, when pressurized, flexible washers can be added at selected, critical locations.

[0121] According to an embodiment of the present invention, attachment of the surgical gas shield device to the body of a patient can be made more secure by using an extended area of adhesive tape of sheet. This is illustrated in FIG. **17**C wherein an extended adhesive sheet **1705** is provided with the surgical gas shield device **1400** which can be used to detachably attach the device at a desired place.

[0122] One problem associated with the use of the surgical gas shield device is the pull (or push in some cases) exerted by the inlet outlet tubes on the gas shield module and elevation system assembly while in operation. For example, while inflating or deflating the elevation system to raise or lower the gas shield module **1402** of the surgical gas shield device **1400**, as shown in FIG. **17**C, the gas shield module **1402** may get pulled by the weight of the tubes or by the jerks exerted due to change in pressure in the tubes. As a solution, the present invention provides an anchorage assembly **1800** as shown in FIG. **18**A. The anchorage system **1800** is designed to mechanically isolate the tubing from the gas shield module **105** and the elevation system.

[0123] As shown in FIG. **18**B and in the exploded view of the anchorage system **1800** in FIG. **18**C, the anchorage system **1800** comprises an anchorage block **120** which can be made of plastic or any suitable material and two flexible tubes **125** of required dimension provided with proper end fittings or adaptors (e.g. **1804** and **1806**). During assembly of the system, the plain, flat end of the anchorage block **120** is attached to the lower end of the elevation system, as shown in FIG. **18**A, which is to rest on the patient's body. For use, first ends of the adaptors are fitted to the corresponding inlet/outlet ports of the gas shield module **105** as shown in FIG. **18**A and the other ends of the adaptors are fitted to the pressure and suction lines (not shown in the FIG.) while secured to the anchorage block **120**. There can be many ways available for securing the adaptors to the anchorage block **120**. In one preferred embodiment, the attachment is in the form of a snap fit semi-circular collar **1808**. Alternatively, more secure attachment can be achieved by snap fitted collars or by collars secured using gluing, adhesives or a variety of mechanical fasteners.

[0124] As the elevation of the gas shield module changes, the flexible tubes allow the gas shield module **105** to rise and fall while absorbing the lengthwise dimensional changes. The anchorage mechanism **1800** makes sure that the weight or pull/push exerted by the pressure and suction lines/tubes do not affect the performance of the gas shield module/gas cushion/flexible folds as the anchorage system does not allow the pull/push to get transmitted to the surgical gas shield device.

[0125] In designing the inflatable elevation system, it is important to take into account the Pressure-Flow (or P-Q) characteristics of the pressurizing system. Axial fans, centrifugal fans and positive displacement pumps have widely differing characteristics. For example, as the one or more gas cushion elements of the elevation system begin to fill with gas near the position of maximum elevation, the flow rate decreases (and ultimately reaches a value of zero) and the supplied pressure increases. Additionally, when using positive displacement pumps, the maximum pressure may be significantly higher than the maximum pressure supplied by axial fans. This pressure may be so high that it may rupture the gas cushion element material. In a preferred embodiment, either a relief valve can be used or the nature and thickness of the material of the gas cushion can be appropriately selected to accommodate that increased pressure.

[0126] According to a preferred embodiment of the present invention, a compression device (positive pressure source), such as a pump or air compressor, can be used to generate the pressure to inflate the gas cushion elements and elevate the gas shield module. In some embodiments, compressed gas canisters or cylinders can be used to inflate the gas cushion elements. In some embodiments, hand pumps may be used for inflation of the gas cushion elements. In some embodiments, multiple types of compression devices, gas canisters, and hand pumps may be used for system redundancy. One of ordinary skill in the art would appreciate that there can be available many suitable devices for inflating the gas cushion elements and embodiments of the present invention are contemplated for use with any such inflation tools.

[0127] According to a preferred embodiment of the present invention, the gas used to inflate the gas cushion is compressed air. One of ordinary skill in the art would appreciate that there are many suitable gasses that could be used to inflate the gas cushion and embodiments of the present invention are contemplated for use with any such gas.

[0128] In some preferred embodiments of the present invention, the elevation system enables elevation of the gas shield module to a certain height and/or at an angle of inclination, if required, without using inflatable elevation system. This allows the same surgical gas shield device

design to be used in a wider range of surgical procedures such as cavity, skin and breast surgeries. Reference to FIG. **19**A, in these embodiments, the elevation system **310** (also referred to as flexible fold elevation system) comprises one or more zigzag-shaped or z-shaped paddings or flexible folds or bellows **1904** (hereinafter referred to as flexible fold **1904**) and, optionally, one or more positioner mechanisms (positioner mechanisms are depicted in FIGS. **19**B, **20**A through **20**D and **21**A through **21**E). The positioner mechanisms enable lockable and releasable adjustment of height and inclination of the elevation systems. The elevation system can be locked at a certain desired height and, then, be released, optionally, from that height and inclination as per requirement with the help of the positioner mechanisms. The material used for the flexible fold **1904** should have dimensional stability and should be flexible, yet sufficiently stiff or rigid to maintain an expanded shape even under the load of a gas shield module mounted on it and keep the flexible fold **1904** from sagging or collapsing after the folds are expanded. Alternatively, other elements (such as some of the positioning elements described below) can support the expected loads in which case, the folded material can be selected to be thinner and more flexible. The flexible fold **1904** can, for example, be made using any method of folding or forming such as vacuum forming, casting or joining of plastic sheets by application of direct heat, ultrasound or by any other suitable means. They can be made from a number of sheets joined together or from a single sheet folded in "accordion fashion". The width of the folds and the number of folds can evidently be selected to suit the initial and final desired height of the elevation system.

[0129] The one or more positioner mechanisms can be provided at specific locations around the periphery of the flexible fold **1904** of the elevation system **310**. FIG. **19**B shows a first embodiment of the flexible fold elevation system. The individual folds can be provided with suitably sized slots **1910** aligned along a vertical axis through which a strip **1908**, hereinafter also referred to as positioner strip **1908**, can be inserted from the top and loop around the lowermost fold and then returned back to the top fold **1912** through the slots with the loose ends of the strip remaining attached to a pull tag **1914** or, conversely, using a single, folded strip with the loose ends joined together at the lowermost fold. The positioner strip **1908** can be made of any suitable material such as Polyethylene, Polypropylene, PTFE, PVC, etc. and are able to provide the desired stiffness and flexibility. In addition to the material selected, several additional factors assist in providing the desired combination of stiffness and flexibility. These include the strip width and thickness. For additional vertical stiffness, two or more such strips can be used at the same general location, effectively providing correspondingly multiple pillars to support vertical forces. The lower end of the single or multiple strips can be attached to the lowermost fold of the elevation system using mechanical fasteners, adhesives or thermal welding.

[0130] FIG. **20**A shows an exemplary embodiment of the positioner strip **1908** which can be a folded form of an otherwise straight piece of strip. FIGS. **19**B, **20**B and **20**C show as to how the pull tag **1914** of the positioner strip **1908** can be detachably attached beneath the uppermost fold **1912** with the help of a sleeve **2002** after looping around the flexible folds.

[0131] When the positioner strip **1908** is pulled with the help of pull tag **1914**, preferably along the length of the fold in the direction **2006**, the flexible fold **1904** is forced to collapse and the height of the elevation system is decreased lowering the gas shield module mounted on it. Pulling the tag **1914** in the opposite direction raises the elevation system. With several such positioner mechanisms located at strategic positions in the flexible folds **1904** of the elevation system, any desired height and inclination can be achieved.

[0132] The strip end or pull tag **1914** can be secured to a desired position using any possible releasable attachments. Examples of releasable attachments include hook and loop fasteners, a small magnet and a magnetic strip combination, rubber or other flexible plastic piece engaging a suitably sized longitudinal or lateral recesses or grooves, spring-loaded clips, snap-on fasteners, hook-and-loop fasteners or re-closable fasteners or tapes, etc. Reference to FIG. **19**B and FIG. **20**C, re-sealable tape **1916** is one such releasable attachment used for detachably securing the tag **1914** to the flexible folds.

[0133] Various other embodiments of the positioner mechanism for controlling the elevation and inclination of the flexible fold type elevation system of the present invention are illustrated through FIGS. **21**A to **21**E. It is evident that some of these suggested mechanisms can be applied to both the flexible fold type and inflatable (gas cushion) type elevation systems.

[0134] Desired level of rigidness of the flexible fold elevation system can be achieved through use of ribbed material **2102** in the folds as shown in FIG. **21**A. The laterally flexible material **2102** in FIG. **21**A can be constructed using commercially available suitably ribbed plastic materials with alternating thin and thicker sections to provide the rigidity needed for vertical flexibility and the lateral flexibility needed to accommodate the lateral variations in the body contours. Alternatively, the material **2102** can be constructed by sandwiching or laminating a material with good springiness, such as cellulose acetate for example, between two thin layers of a very flexible material such as polyester, polyethylene or plasticized PVC sheets and the whole assembly can be welded thermally or ultrasonically or using any other suitable means. Other suitable materials include, but are not limited to, Polyethylene, Polypropylene, Acetal copolymer, Linear Polyphenylene sulfide, Nylon and ABS. In an alternative embodiment, the structural rigidity of the system can be provided by the positioning strips only, in which case, a thinner and more flexible material can be used for the folding system to provide only a barrier to the surgical site.

[0135] In the embodiment shown in FIG. **21**B, one or more deformable thin strips **2106** are attached to the folds **1904** orthogonally to the fold lines **2108** at the edges or at places evenly or unevenly spaced apart. When pressed manually by a user, the one or more strips **2106** deform at the fold lines **2108** and hold the flexible folds at the desired position. The gas shield module can be positioned at a plane inclined at any desired angle to the plane of the surgical site when one or more deformable strips **2106** are pressed down by different distances.

[0136] FIG. **21**C illustrates another embodiment of the flexible fold elevation system in which a deformable element **2112** is attached to the uppermost and lowermost strips of the flexible fold **310**. The material itself can be deformed or a joint **2114** can be a made as a bent part of the element **2112** or it can be made in the form of a friction hinge with or without position indexing. When the flexible fold **1904** is

pushed downward, the deformable element **2112** bends around the joint/hinge **2114** and stays at that position forcing the flexible fold **1904** to take the desired position at that location. A number of such elements **2112** strategically located around the perimeter of the flexible fold **1904** yields the desired control over elevation and inclination of the elevation system **310**.

[0137] In another embodiment of the flexible fold type elevation system, as shown in FIG. **21**D, a slender element **2116** is attached to the flexible fold **1904**. The lower limb of the element **2116** is rotatably secured to the lowermost fin/strip of the folds. The upper limb of the element **2116** is rotatably and slidingly secured to the uppermost fold with the help of a lockable mechanical slide **2118**. When the flexible fold is pushed down, the element **2116** tilts. The tilting of the element **2116** is facilitated by the rotation of the lower limb of the element **2116** and sliding of the upper limb of the element. After reaching a desired location, the mechanical slide **2118** can be prevented from sliding backward so that the flexible fold remains at that elevation. However, the mechanical slide **2118** can be allowed to slide further forward in case the flexible fold **1904** gets unintentionally pressed down again. In such cases the slide **2118** will come back to its desired position once the pressure is withdrawn. A number of such elements can be provided to the elevation system to give the desired control of elevation and inclination of the elevation system **310**.

[0138] In yet another embodiment of the flexible fold elevation system, one or more pieces of strings or flexible strips **2120** are disposed with at the ends of the flexible fold **1904** as shown in FIG. **21**E. Each of these strips **2120** can be pulled along the perimeter of the flexible fold **1904** or sidewise from above or below the folds to raise or lower the gas shield module at that location. The string or strip **2120** can be secured at position using mating hook and loop (e.g. Velcro) strips or a spring loaded clipper or a variety of lockable releasable mechanisms. With a minimum of four such elements or more, the assembly's elevation and inclination can be adjusted. This arrangement also allows the flexible folds to compress further and then return to the desired position if the assembly is unintentionally pressed down.

[0139] The surgical gas shield device **300** can be secured to a desired position and inclination by the use of adhesive sheets or tape as is normally used in medical procedures or by hook-and-loop elements or by snap-on male and female elements or other means of attachment or re-attachment. This is illustrated in FIG. **22**A. To secure the assembly at a position relative to the body of the patient and to maintain the required elevation and inclination, in one possible embodiment one or more strips of adhesive material or hook and loop elements or other means of attachment or re-attachment can be used. In this case, a portion of the adhesive or attachment material **2202** is attached to the top of the gas shield module **305** and the other portion of the adhesive or attachment element **2204** is attached to the body of the patient or to the draping system. In a preferred embodiment, the adhesive or attachment material or element supplied is already attached to the assembly and the user simply pushes the assembly from above and secures the lower part of the adhesive or attachment material or element to the body of the patient or the draping system.

[0140] The design of the flexible fold **1904** with the positioning mechanism has to take care of the weight distribution of the gas shield module and the various forces expected during use so that the gas shield module can be positioned at an acceptable or desired initial position. Some of the important design considerations for flexible fold **1904** are, but not limited to, the size and weight of the gas shield module, forces expected to be exerted on the system during use, vertical flexibility of the folds, nature and thickness of material used for the folds, width of the folds (generally, the wider the folds, the greater the flexibility) etc. FIG. **22**B illustrates top view of an exemplary profile of a flexible fold **1904** which has been designed by taking the above mentioned design criteria into account for a certain gas shield module.

[0141] FIG. **23**A and FIG. **23**B show as to how a flexible fold elevation system **310** disposed with one or more of the above mentioned positioner mechanisms enable positioning of the gas shield device **305** at any desired plane elevated from the base and adjusted parallel or inclined to the base. As illustrated in FIG. **23**A and FIG. **23**B, the gas shield module **305** can be pushed manually from above to compress the flexible folds of the elevation system **310** to get the required elevation or inclination of the gas shield module **305**. In one embodiment, the flexible fold **1904** is resilient and tends to regain its original shape in the vertical direction once the pressure or load over it is removed.

[0142] Using corrugated or folded sheets is only one of the methods of constructing the flexible folds. It is also possible to use soft, deformable materials such as polyester padding to achieve the same result. It can even be envisaged to construct such a system using a series of springs in parallel. Other possible methods may use stacks of flexible pieces of tubing to achieve both the vertical and the lateral flexibility mentioned above. The flexible folds can be sized to suit the size of the gas shield module in which it is used.

[0143] The flexible fold design of the elevation system influences the design of the gas shield module also as the necessity of having a valve for controlling gas flow, as in the case of gas cushion type of elevation system, is done away with.

[0144] The flexible fold elevation system conforms closely to the natural contours of body parts and, thus, it allows positioning of the surgical gas shield device **300** at any uneven place on the patient's body. FIG. **24** shows two surgical gas shield devices **300** of different dimensions placed at two different places on a patient's body. A bigger surgical gas shield device **300** is shown placed on the leg **2402** of a patient whereas a smaller surgical gas shield device **300** is shown placed on the arm **2404** of the patient.

[0145] According to an embodiment of the present invention, the system encompassing the invention can also be used without elevating the gas shield module by partially inflating the gas cushion elements to provide a soft interface between the patient's body and a rigid surface at the top. In the preferred embodiment, the flexible lower part may also be useful in allowing the system to accommodate different contours and curvatures of the patient's body.

[0146] The use of the terms "a" and "an" and "the" and similar referents in the context of describing the invention are to be construed to cover both the singular and the plural, unless otherwise indicated herein or clearly contradicted by context. The terms "comprising," "having," "including," and "containing" are to be construed as open-ended terms (i.e., meaning "including, but not limited to,") unless otherwise noted. The terms "affixed", "fitted", "attached",

"tied" are to be construed as partly or wholly contained within, attached to, or joined together, even if there is something intervening. All methods described herein can be performed in any suitable order unless otherwise indicated herein or otherwise clearly contradicted by context. The use of any and all examples, or exemplary language (e.g., "such as") provided herein, is intended merely to better illuminate embodiments of the invention and does not pose a limitation on the scope of the invention unless otherwise claimed. No language in the specification should be construed as indicating any non-claimed element as essential to the practice of the invention.

[0147] Preferred embodiments of this invention are described herein. Variations of those preferred embodiments may become apparent to those of ordinary skill in the art upon reading the foregoing description. The inventor expects skilled artisans to employ such variations as appropriate, and the inventor intends for the invention to be practiced otherwise than as specifically described herein. Accordingly, this invention includes all modifications and equivalents of the subject matter recited in the claims appended hereto as permitted by applicable law. Moreover, any combination of the above-described elements in all possible variations thereof is encompassed by the invention unless otherwise indicated herein or otherwise clearly contradicted by context.

1. A surgical gas shield device, said device comprising:

a gas shield module, said gas shield module having a body housing, said body housing divided into a discharge chamber and a suction chamber, said discharge chamber configured to be coupled with a positive pressure source and said suction chamber configured to be coupled with a negative pressure source, a plurality of discharge ports disposed along an inner periphery of said discharge chamber and a plurality of suction ports disposed along an inner periphery of said suction chamber; and

an elevation system attached to said gas shield module, said elevation system configured to hold said gas shield module around a surgical site at an adjustable height and inclination with respect to said surgical site;

wherein discharge of a gas introduced from said positive pressure source through said plurality of discharge ports over said surgical site and suction of said gas and a plurality of air borne byproducts from said surgical site through said plurality of suction ports by application of partial vacuum to said suction chamber by said negative pressure source create a gas shield over said surgical site.

2. The surgical gas shield device as in claim **1**, wherein said gas shield module is a fork type gas shield module.

3. The surgical gas shield device as in claim **1**, wherein said gas shield module is a closed loop type gas shield module.

4. The surgical gas shield device as in claim **1**, wherein said discharge chamber and said suction chamber of said gas shield module are provided with one or more flow channels.

5. The surgical gas shield device as in claim **1**, wherein said elevation system is an inflatable type elevation system comprising one or more gas cushion elements configured to selectively be in fluid communication with said gas shield module by use of one or more valves provided in said gas shield module.

6. The surgical gas shield device as in claim **5**, wherein said one or more valves provided in said gas shield module is a push type valve which enables control of inflation and deflation of said inflatable type elevation system to attain said adjustable height and inclination.

7. The surgical gas shield device as in claim **5**, where said one or more valves provided in said gas shield module is a rocker type valve which enables control of inflation and deflation of said inflatable type elevation system to attain said adjustable height and inclination.

8. The surgical gas shield device as in claim **5**, wherein design of said one or more gas cushion elements is made to support a non-uniform weight distribution of said body housing of said gas shield module.

9. The surgical gas shield device as in claim **1**, wherein said surgical gas shield device further comprises an anchorage system.

10. The surgical gas shield device as in claim **9**, wherein said anchorage system comprises two flexible tubes which connect said positive pressure line and said negative pressure line to said gas shield module and an anchorage block that holds said two flexible tubes in place to isolate said surgical gas shield device from any push or pull exerted by said positive pressure line and said negative pressure line.

11. The surgical gas shield device as in claim **5**, wherein said one or more gas cushion elements of said inflatable type elevation system conform to contours of a body part of a patient to hold said gas shield module over said surgical site at said adjustable height and inclination.

12. The surgical gas shield device as in claim **1**, wherein said elevation system is a flexible fold type elevation system comprising one or more flexible folds.

13. The surgical gas shield device as in claim **12**, wherein said one or more flexible folds substantially conform to contours of a body part of a patient to hold said gas shield module over said surgical site at said adjustable height and inclination.

14. The surgical gas shield device as in claim **12**, wherein said flexible fold type elevation system further comprises one or more positioner mechanisms that enable a lockable and releasable adjustment of elevation and inclination of said one or more flexible folds to attain said adjustable height and inclination.

15. The surgical gas shield device as in claim **14**, wherein said one or more positioner mechanisms comprise one or more positioner strips disposed at one or more locations in said flexible folds, said one or more positioner strips configured to loop around said flexible folds and to provide one or more pull tags below said gas shield module to enable said adjustment of height and inclination.

16. The surgical gas shield device as in claim **14**, wherein said adjustment of height and inclination is attainable through application of a manual force on said gas shield module.

17. A method for providing a gas shield at a surgical site, said method comprising:

providing a surgical gas shield device, said surgical gas shield device comprising an elevation system and a gas shield module mounted on said elevation system, said gas shield module having a body housing, said body housing divided into a discharge chamber and a suction chamber, a plurality of discharge ports disposed along an inner periphery of said discharge chamber and a

plurality of suction ports disposed along an inner periphery of said suction chamber;

coupling said discharge chamber with a positive pressure source and coupling said suction chamber with a negative pressure source;

placing said surgical gas shield device around a surgical site;

adjusting and readjusting a height and an inclination of said elevation system to hold said gas shield module over said surgical site at a desired position;

introducing a gas supplied from said positive pressure source through said plurality of discharge ports over said surgical site; and

evacuating said gas and a plurality of air borne byproducts from said surgical site through said plurality of suction ports by application of partial vacuum to said suction chamber by said negative pressure source to create said gas shield over said surgical site.

18. The method as in claim **17**, wherein said gas shield module is a fork type gas shield module.

19. The method as in claim **17**, wherein said gas shield module is a closed loop type gas shield module.

20. The method as in claim **17**, wherein said elevation system is an inflatable type elevation system comprising one or more gas cushion elements configured to selectively be in fluid communication with said gas shield module by use of one or more valves provided in said gas shield module.

21. The method as in claim **17**, wherein said elevation system is a flexible fold type elevation system comprising one or more flexible folds.

22. The method as in claim **21**, wherein said flexible fold type elevation system further comprises one or more positioner mechanisms that enable a lockable and releasable adjustment of elevation and inclination of said one or more flexible folds to attain said desired position of said gas shield module.

23. The method as in claim **17**, wherein said adjustment and readjustment of said height and said inclination are attainable through application of a manual force on said gas shield module.

24. A surgical gas shield device, said device comprising:

a gas shield module having a body housing, said body housing comprising a top wall and a bottom wall, said top wall and said bottom wall configured to define one or more chambers when joined together, a plurality of suction ports disposed along an inner periphery of said one or more chambers; and

an elevation system attached to said gas shield module, said elevation system configured to hold said gas shield module around a surgical site on a patient's body and to enable adjustment and readjustment of height and inclination of said gas shield module with respect to said surgical site;

wherein a plurality of air borne byproducts are evacuated from said surgical site through said plurality of suction ports by application of a partial vacuum to said one or more chambers by a negative pressure source detachably connected to said one or more chambers.

25. The surgical gas shield device as in claim **24**, wherein said elevation system is an inflatable type elevation system comprising one or more gas cushion elements configured to selectively be in fluid communication with said gas shield module by use of one or more valves provided in said gas shield module.

26. The surgical gas shield device as in claim **24**, wherein said elevation system is a flexible fold type elevation system comprising one or more flexible folds configured to conform to an uneven surface around said surgical site.

* * * * *