IN THE UNITED STATES DISTRICT COURT
FOR THE WESTERN DISTRICT OF MICHIGAN
SOUTHERN DIVISION

SOLMETEX, LLC,	)	Case No. 1:24-cv-00954-RJJ-MV
	)	
	)	The Honorable Robert J. Jonker
Plaintiff, Counter-Defendant	)	
	)	
v.	)	
	)	
	)	
ASCENTCARE DENTAL PRODUCTS, INC.,	)	
	)	
	)	
	)	
Defendant, Counter-Plaintiff.	)	

ASCENTCARE'S INITIAL NON-INFRINGEMENT CONTENTIONS

I. INTRODUCTION

Pursuant to the First Case Management Order, ECF No. 20, Defendant Ascentcare Dental Products ("Ascentcare") makes the following initial non-infringement contention disclosures to Plaintiff Solmetex, LLC ("Solmetex"). These contentions relate to U.S. Patent Nos. 11,589,969 (the "'969 Patent"), 11,589,970 (the "'970 Patent"), 11,744,686 (the "'686 Patent"), 11,826,217 (the "'217 Patent"), 12,011,329 (the "'329 Patent"), 12,167,948 (the "'948 Patent") and 12,290,418 (the "'418 Patent") (the "Asserted Utility Patents") as well as U.S. Patent Nos. D962,438 (the "'438 Patent"), D962,439 (the "'439 Patent") and D1,037,436 (the "'436 Patent") (the "Asserted Design Patent") (collectively the "Asserted Patents").

In its June 16, 2025, Infringement Contentions, Solmetex accused both the First VacuLux Mouthpiece ("VM1") and the Second VacuLux Mouthpiece ("VM2") (collectively the "Accused Products") of infringing at least one of the Asserted Utility Patents or Asserted Design Patents.

Solmetex Ex. 2015
Ascentcare Dental Products v. Solmetex - IPR2025-01065

Solmetex provided the following chart regarding its asserted claims for the Asserted Utility Patents.

Patent	Asserted Claims
’969 Patent	19 (1 total)
’970 Patent	1, 9-13, 15-16, 18 (9 total)
’686 Patent	12-15, 17-18, 20 (7 total)
’217 Patent	17-23 (7 total)
’329 Patent	1, 4-7, 9-14, 30 (12 total)
’948 Patent	20-31 (12 total)
’418 Patent	1-6, 8, 11-16, 19-22, 24-26, 28 (21 total)

Further, Solmetex identified which Accused Product, or instrumentality, that it contends infringes its various patents.

Appendix	Patent	Accused Instrumentality
1.	’969 Patent	First VacuLux Mouthpiece
2.	’969 Patent	Second VacuLux Mouthpiece
3.	’970 Patent	First VacuLux Mouthpiece
4.	’970 Patent	Second VacuLux Mouthpiece
5.	’686 Patent	First VacuLux Mouthpiece
6.	’217 Patent	First VacuLux Mouthpiece
7.	’329 Patent	First VacuLux Mouthpiece
8.	’329 Patent	Second VacuLux Mouthpiece
9.	’948 Patent	Second VacuLux Mouthpiece

10.	’418 Patent	Second VacuLux Mouthpiece
11.	’438 Patent	First VacuLux Mouthpiece
12.	’438 Patent	Second VacuLux Mouthpiece
13.	’439 Patent	First VacuLux Mouthpiece
14.	’439 Patent	Second VacuLux Mouthpiece
15.	’436 Patent	First VacuLux Mouthpiece
16.	’436 Patent	Second VacuLux Mouthpiece
17.	’686 Patent	Second VacuLux Mouthpiece

Solmetex moved to amend its complaint to add the ’418 Patent and drop U.S. Design Patent No. D988,505. Pursuant to the Court’s order granting Solmetex’s motion file a second amended complaint, the Court “sets a new deadline of August 18, 2025, for the invalidity and non-infringement contentions on the ’418 Patent.”) ECF 32. As a result, Ascentcare intends to amend its non-infringement contentions to include the asserted claims of the ’418 Patent by the deadline set forth by the Court which include twenty-one (21) of the sixty-nine (69) asserted claims.

Ascentcare reserves its right to amend or supplement its Contentions. These disclosures are based on Ascentcare’s current understanding of the meaning and scope of the Asserted Utility Patents. They are made without knowledge of Solmetex’s claim construction positions, if applicable, or the Court’s claim constructions, if applicable. Ascentcare’s contentions do not constitute admissions or adoptions of any particular claim scope or construction. Ascentcare reserves the right to amend and/or supplement these disclosures and/or seek leave to do so when claim construction is completed or in reply to Solmetex’s response to these disclosures.

Ascentcare’s investigation of the Asserted Utility Patents is ongoing, as is discovery in this action. As of the submission of the initial contentions, Solmetex has yet to substantively produce

documents and has provided deficient responses with boilerplate objections to Ascentcare's interrogatories. Ascentcare reserves the right to amend and/or supplement these disclosures. Further, the parties have not yet begin expert discovery. Ascentcare reserves the right to amend and/or supplement these disclosures based on expert discovery.

As discussed in more detail below, at this stage of the litigation, Ascentcare contends that the Accused Products do not infringe the Asserted Utility Patents pursuant to 35 U.S.C. § 271. Ascentcare's patent-by-patent non-infringement contentions for the Accused Products are set forth in Exhibits A through Q attached hereto. The specific callouts provided in Ascentcare's attached charts are intended to be exemplary, not exhaustive. Ascentcare further reserves the right to rely upon treatises, published industry standards, and similar documents, regardless of whether they are identified in these contentions, to demonstrate the knowledge of a person having ordinary skill in the art ("PHOSITA").

While Ascentcare has endeavored to identify the most relevant portions of the Accused Products in these Initial Non-Infringement Contentions, the Accused Products may contain additional support for non-infringement of the Asserted Patents. Ascentcare may rely upon those portions that have not been specifically identified, the file histories of the Asserted Utility Patents, or fact and expert testimony/documents not yet in evidence to provide context in understanding the Accused Products or Asserted Utility Patents. Ascentcare further reserves the right to amend and/or supplement these disclosures and/or seek leave to do so.

II. BACKGROUND

A. Accused Products

1. First VacuLux Mouthpiece (VM1)

The Accused Products include both the First Vaculux Mouthpiece (VM1) and the Second Vaculux Mouthpiece (VM2). Solmetex has accused Ascentcare's products of infringing various

claims of the Asserted Patents, which include claim limitations directed to features common to the prior art dating back to the 1960s (*see* Initial Invalidity Contentions), including *inter alia*, suction connectors, cheek retractors, bite blocks, and main body portions. These features are standard in the dental isolation mouthpiece industry, dating at least far back as 2001 with Hirsch's design and improved 2003 design exemplifying such features.

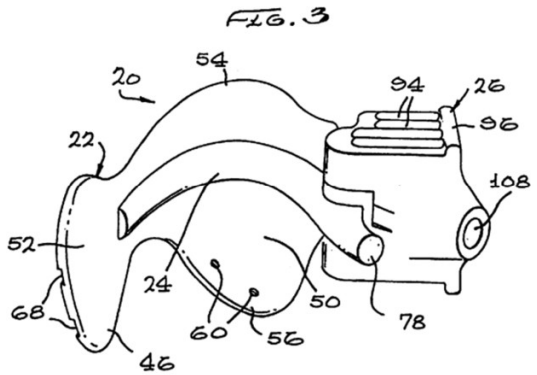

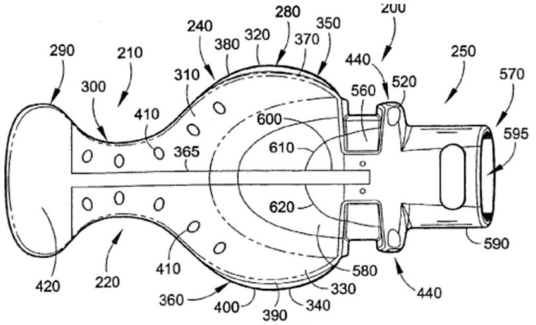

FIG. 19A

In contrast to both the historical design and competitors such as Solmetex, the First VacuLux Mouthpiece (VM1) features a posterior wall, an anterior wall that is significantly smaller than the posterior wall with teeth along the exterior edges of that anterior wall to prevent contact and facilitate suction, and a distinct lack of connections along the differing sized edges of the anterior and posterior walls. VM1 more accurately has an anterior and posterior flap, as opposed to walls, as there is no connecting wall defining a pocket or comprehensive internal space. Instead, the anterior flap facilitates suction through gaps formed along the edge formed by open sides. Further, the First VacuLux Mouthpiece contains no connections along the edge of the flaps of the mouthpiece, enhancing patient comfort and separating it from competitors like Solmetex.

Throughout its contentions attached as Exhibits A-Q, Ascentcare relies on images from Solmetex's contentions as well as the following listed below: VM1 – Ascentcare 00000046,

Ascentcare 00000259, Ascentcare 00000688, Ascentcare00001069-1073; VM2 – Ascentcare00000915, Ascentcare00001176, Ascentcare00001314, Ascentcare 00003508-3514.

VM1 comes in a variety of sizes featuring different widths of the anterior and posterior flaps, as well as a different number of perforations on the anterior and posterior flaps corresponding to the relative size of the mouthpiece. The core features described above, however, are maintained across the different sizes. VM1 ceased sales in May of 2024.

2. Second VacuLux Mouthpiece (VM2)

The Second Vaculux Mouthpiece (VM2) features similar sections and features, however, VM2 has large distinctive fluid channels extending variable distances outward from the surface of the anterior wall towards the mouth of the patient. These channels are part of the anterior wall, created by the shape of the anterior wall, and travel various distances towards the spine of the mouthpiece. These fluid channels allow for more suction albeit quieter due to the enhanced surface area for the suction force to pull through.

Throughout its contentions attached as Exhibits A-Q, Ascentcare relies on images from Solmetex's contentions as well as the following listed below: VM1 – Ascentcare 00000046, Ascentcare 00000259, Ascentcare 00000688, Ascentcare00001069-1073; VM2 – Ascentcare00000915, Ascentcare00001176, Ascentcare00001314, Ascentcare 00003508-3514.

VM2 comes in a variety of sizes featuring different widths of the anterior and posterior flaps, as well as a different number of perforations on the anterior and posterior flaps corresponding to the relative size of the mouthpiece. The core features described above, however, are maintained across the different sizes.

B. Person Having Ordinary Skill in the Art (PHOSITA)

A PHOSITA in this case would be a person having at least a degree in mechanical engineering or related field with at least 2 years of experience designing dental devices or suction devices. If a person has a higher level of education, less experience could be acceptable, and vice versa.

C. Designer of Ordinary Skill in the Art (DOSA)

A DOSA in this case is a person having at least a degree in mechanical engineering, design, or related field with at least 2 years of experience designing dental devices or suction devices. If a person has a higher level of education, less experience could be acceptable, and vice versa.

D. Ordinary Observer

An ordinary observer is a hypothetical person of "ordinary acuteness" who is the principal purchaser of the underlying articles that include the claimed designs. *Ethicon Endo-Surgery, Inc. v. Covidien, Inc.*, 796 F.3d 1312, 1337 (Fed. Cir. 2015). The ordinary observer is assumed to be familiar with the relevant prior art. *See Egyptian Goddess, Inc. v. Swisa, Inc.*, 543 F.3d 665, 678 (Fed. Cir. 2008) (ordinary observer "conversant with the prior art").

Solmetex has failed to identify any ordinary observer in its infringement contentions. For the Asserted Design Patents, the ordinary observer is anyone who purchases dental mouthpieces, including dentists. Ascentcare reserves the right to object to or move to strike any ordinary observer definition belatedly proffered by Solmetex.

E. Features Common to the Prior Art

Under a proper design patent infringement analysis, an ordinary observer would find differences between the claimed and accused designs more significant when there are many examples of close prior art.

> In some instances, the claimed design and the accused design will be sufficiently distinct that it will be clear without more that the patentee has not met its burden of proving the two designs would appear "substantially the same" to the ordinary observer, as required by *Gorham*. In other instances, when the claimed and accused designs are not plainly dissimilar, resolution of the question whether the ordinary observer would consider the two designs to be substantially the same will benefit from a comparison of the claimed and accused designs with the prior art, as in many of the cases discussed above and in the case at bar. Where there are many examples of similar prior art designs, as in a case such as *Whitman Saddle,* differences between the claimed and accused designs that might not be noticeable in the abstract can become significant to the hypothetical ordinary observer who is conversant with the prior art.

Egyptian Goddess at 678. "In other words, where a dominant feature of the patented design and the accused products—here the hourglass shape—appears in the prior art, the focus of the infringement substantial similarity analysis in most cases will be on other features of the design. The shared dominant feature from the prior art will be no more than a background feature of the design, necessary for a finding of substantial similarity but insufficient by itself to support a finding of substantial similarity." *ABC Corp. I v. P'ship & Unincorporated Associations Identified on Schedule "A"*, 52 F.4th 934, 942 (Fed. Cir. 2022). Ascentcare incorporates the prior art discussions contained in its Initial Invalidity Contentions.

Ascentcare notes that despite Solmetex citing hundreds of apparently material prior art references on the face of its Asserted Design Patents during the prosecution of those patents, Solmetex has failed to discuss any of those references in its design patent infringement analyses. As Solmetex has failed to discuss its design patent infringement contentions in light of the prior art, it has failed to conduct the proper design patent infringement analysis and meet its burden to demonstrate infringement. Ascentcare further reserves the right to respond to or strike any belated prior art discussion in its infringement case.

F. Functional Aspects of the Design Patents May Not Be Considered for Infringement.

In re Mann, 861 F.2d at 1582 (Fed. Cir. 1988) ("Design patents have almost no scope. The claim at bar, as in all design cases, is limited to what is shown in the application drawings.") Relatedly, and as discussed in Ascentcare's Initial Invalidity Contentions, Ascentcare contends that the Asserted Design Patents are fully functional. However, to the extent that Solmetex contends that any portion of its design patents are not fully functional,[1] any functional elements do not make up any portion of the claimed design. Where a design contains both functional and non-functional elements, the scope of the claim must be construed in order to identify the non-functional aspects of the design as shown in the patent. *OddzOn Prods., Inc. v. Just Toys, Inc.*, 122 F.3d 1396, 1405 (Fed. Cir. 1997). For example, suction connectors and bite blocks are both functional and designs well-known in the prior art. Suction connectors are tubular in nature to connect to a vacuum adaptor, and bite blocks are tapered in nature to fit a patient's hinged jaw and ridged to avoid slippage of the teeth. As such, the attention of the ordinary observer will be drawn to the differences between the prior art and the claimed design. *Lanard Toys Ltd. v. Dolgencorp LLC*, 958 F.3d 1337, 1343 (Fed. Cir. 2020) ("'[t]he problem for Lanard, however, is that the design similarities stem from aspects of the design that are either functional or well-established in the prior art." *Id*. at *18. Thus, the court found that "the attention of the ordinary observer 'will be drawn to those aspects of the claimed design that differ from the prior art,'").

[1] Solmetex has refused to comply with its discovery obligations and identify functional elements of its claimed designs, despite being served with an Interrogatory requesting such identification. As Solmetex has failed to identify any non-functional elements in its claimed designs, Solmetex's infringement contentions are improper.

III. THE ACCUSED PRODUCTS DO NOT PRACTICE THE ASSERTED PATENTS

Solmetex bears the burden to prove patent infringement. *Creative Compounds, LLC v. Starmark Lab'ys*, 651 F.3d 1303, 1314 (Fed. Cir. 2011). If even one limitation is missing or not met as claimed, there is no literal infringement. *Brigham & Women's Hosp., Inc. v. Perrigo Co.*, 761 F. App'x 995, 1003 (Fed. Cir. 2019) (citing *Mas–Hamilton Group v. LaGard, Inc.*, 156 F.3d 1206, 1211 (Fed. Cir. 1998)). For allegations of indirect infringement, there must be a threshold instance of direct infringement. *In re Bill of Lading Transmission and Processing System Pat. Litig.*, 681 F.3d 1323, 1333 (Fed. Cir. 2012) ("It is axiomatic that '[t]here can be no inducement or contributory infringement without an underlying act of direct infringement.'") (internal citations omitted).

A. No Direct Infringement

Neither of the Accused Products, being the First VacuLux Mouthpiece (VM1) and Second VacuLux Mouthpiece (VM2), practice the claims of the Asserted Patents. Both mouthpieces feature an open-sided mouthpiece with no side wall (or connecting wall, third wall, superior/inferior wall, etc.) or other form of connection along the edges of the anterior and posterior wall, a bifurcated internal space separated by a spine connecting the first and second wall along the center, and fluid suction mechanisms that do not protrude from the interior surface of the mouthpiece's walls or maintain a uniform shape or size across the span of the edges of the anterior wall. The mouthpieces constitute an open edged article that the specification of the Asserted Patents teach away from and fail to depict. Further, the prosecution histories of many of the asserted patents specifically disclaim the configuration of the Accused Products.

Ascentcare further notes that Solmetex has accused VM1 of infringing the '436 Patent. However, Ascentcare ceased sales of VM1 on May 18, 2024, prior to the issuance of the '436

Patent on July 30, 2024. As such, as a matter of law, Ascentcare's sales of VM1 cannot directly infringe nor willfully infringe the '436 Patent.

Ascentcare incorporates by reference each of its Initial Non-Infringement Charts indexed in the table below:

Exhibit	Patent	Accused Instrumentality
A	'969 Patent	First VacuLux Mouthpiece
B	'969 Patent	Second VacuLux Mouthpiece
C	'970 Patent	First VacuLux Mouthpiece
D	'970 Patent	Second VacuLux Mouthpiece
E	'686 Patent	First VacuLux Mouthpiece
F	'686 Patent	Second Vaculux Mouthpiece
G	'217 Patent	First VacuLux Mouthpiece
H	'329 Patent	First VacuLux Mouthpiece
I	'329 Patent	Second VacuLux Mouthpiece
J	'948 Patent	Second VacuLux Mouthpiece
K	'418 Patent[2]	Second VacuLux Mouthpiece
L	'438 Patent	First VacuLux Mouthpiece
M	'438 Patent	Second VacuLux Mouthpiece
N	'439 Patent	First VacuLux Mouthpiece
O	'439 Patent	Second VacuLux Mouthpiece
P	'436 Patent	First VacuLux Mouthpiece

[2] Pursuant to this Court's Order, Ascentcare's Non-Infringement Contentions related to the '418 Patent will be served no later than August 18, 2025.

Q	’436 Patent	Second VacuLux Mouthpiece

B. Insufficient Doctrine of Equivalents Allegations

Ascentcare was unable to substantively respond to Solmetex’s assertions of the doctrine of equivalents (DOE) due to Solmetex’s deficiently pled allegations. Solmetex applied a blanket assertion of DOE to almost all claim terms. Ascentcare cannot ascertain the scope of how Solmetex intends to apply DOE. Even so, Solmetex is barred from asserting DOE on most claim language due to extensive amendments during prosecution to overcome the prior art.

“Under the doctrine of equivalents, ‘a product or process that does not literally infringe upon the express terms of a patent claim may nonetheless be found to infringe if there is ‘equivalence’ between the elements of the accused product or process and the claimed elements of the patented invention.’” *NexStep, Inc. v. Comcast Cable Commun., LLC*, 119 F.4th 1355, 1370 (Fed. Cir. 2024), *cert. denied sub nom. Nexstep, Inc. v. Comcast Cable Commun.*, No. 24-1137, 2025 WL 1678993 (U.S. June 16, 2025) (internal citation omitted). The doctrine of equivalents can be proven—by the patentee—through either the function-way-result test or by showing that the differences between the claimed invention and accused device are insubstantial. *See Mylan Institutional LLC v. Aurobindo Pharma Ltd.*, 857 F.3d 858, 866 (Fed. Cir. 2017); *see also Graver Tank & Mfg. Co. v. Linde Air Prods. Co.*, 339 U.S. 605, 609 (1950); *see also Tex. Instruments Inc. v. Cypress Semiconductor Corp.*, 90 F.3d 1558, 1563-1564 (Fed. Cir. 1996).

Solmetex neither identifies how the accused product performs substantially the same function in substantially the same way to obtain the same result nor classifies any differences between the claimed invention and accused device as insubstantial. Instead, Solmetex provides boilerplate assertions that to the extent its deficient non-infringement positions do not meet the

limitations of its asserted claims, the doctrine of equivalents patches any missing holes. Not only are these blanket assertions deficient, but they also leave Ascentcare unable to dispute the identified functions, ways, results, or differences. Ascentcare promptly brought this deficiency to Solmetex's attention via email and during a meet and confer. However, Solmetex refused to amend or further clarify its position for any of its alleged doctrine of equivalents positions, stating that it would only do so after receiving Ascentcare's contentions and after the Court issued its claim constructions in this case. Ascentcare reserves the right to amend if Solmetex attempts to correct these deficiencies.

C. No Indirect Infringement

Because neither Ascentcare or the third parties identified by Solmetex (dental practitioners, resellers, distributors, etc.), directly infringes the Asserted Patents, there can be no indirect infringement of the Asserted Patents. Solmetex alleges that Ascentcare indirectly infringes the Asserted Patents through induced infringement and contributory infringement. Ascentcare neither induces infringement nor does it contribute to the alleged infringement of others.

35 U.S.C. § 271(b) regarding induced infringement states "Whoever actively induces infringement of a patent shall be liable as an infringer." 35 U.S.C. § 271(b). Induced infringement requires a threshold finding of direct infringement, knowledge of the patent, and specific intent to cause direct infringement with affirmative acts taken to cause another to directly infringe. *See Glob.-Tech Appliances, Inc. v. SEB S.A.*, 563 U.S. 754, 760 (2011) ("[t]he addition of the adverb 'actively' suggests that the inducement must involve the taking of affirmative steps to bring about the desired result … this provision may require merely that the inducer lead another to engage in conduct that happens to amount to infringement"); *see also Commil USA, LLC v. Cisco Sys., Inc.*, 575 U.S. 632, 639 (2015) ("In contrast to direct infringement, liability for inducing infringement

attaches only if the defendant knew of the patent and that 'the induced acts constitute patent infringement.'") (internal citation omitted); *see also Aro Mfg. Co. v. Convertible Top Replacement Co.*, 377 U.S. 476, 488 (1964).

Solmetex bears the burden to prove infringement, indirect or otherwise. Solmetex must demonstrate specific intent and affirmative acts taken by Ascentcare to induce the infringement of others. Solmetex has not, and cannot, demonstrate such intent and acts because Ascentcare has not induced infringement of any party. For its specific grounds, Solmetex argues that Ascentcare "indirectly infringes by actively, knowingly, **and/or** intentionally inducing or contributing to the direct infringement of the asserted claims … [such] affirmative acts of inducement include, but are not limited to, **any one or combination of** encouraging and/or facilitating the infringement of others through" marketing, sales and technical documentation provided along with the product. Solmetex Inf. Cont. at 15-16. (emphasis added)

Specifically, Solmetex contends that "Ascentcare has continued to, at a minimum, induce third parties . . . to infringe by ***using the First VacuLux Mouthpiece***." However, such a contention, even if true, is plainly insufficient under the law to demonstrate induced infringement, as it is insufficient as a matter of law to allege that Ascentcare's customers use VM1. *DSU Med. Corp. v. JMS Co.*, 471 F.3d 1293, 1306 (Fed. Cir. 2006). ("It must be established that the defendant possessed specific intent to encourage another's infringement and not merely that the defendant had knowledge of the acts alleged to constitute inducement. The plaintiff has the burden of showing that the alleged infringer's actions induced infringing acts *and* that he knew or should have known his actions would induce actual infringements.") (citations omitted). Solmetex has not and cannot demonstrate that Ascentcare affirmatively sought to encourage actual infringement because, again, Ascentcare does not actually infringe nor believed itself to infringe.

Solmetex fails to identify any specific intent or actions taken to induce infringement by others. Instead, it identifies a combination of boilerplate activities that may constitute indirect infringement. The existence of marketing materials and technical guidelines do not constitute affirmative acts taken to encourage others to infringe the Asserted Patents. Further, Solmetex's argument does not appear to match this case. The Asserted Patents do not claim a system featuring different components that are combined. The Asserted Patents do not feature method claims where steps are performed. The Asserted Patents claim a mouthpiece. It is unclear why Solmetex contends that Ascentcare sell parts, components, or intermediate products that are assembled, and once assembled, infringe the claims of its patents. In fact, the patents describe the parts being molded in cohesive units, not some assembly process. Solmetex has failed to identify any affirmative acts taken with the specific intent to infringe the patents.

35 U.S.C. § 271(c) regarding contributory infringement states "Whoever offers to sell or sells within the United States or imports into the United States a component of a patented machine, manufacture, combination or composition, or a material or apparatus for use in practicing a patented process, constituting a material part of the invention, knowing the same to be especially made or especially adapted for use in an infringement of such patent, and not a staple article or commodity of commerce suitable for substantial noninfringing use, shall be liable as a contributory infringer." Contributory infringement require knowledge of the patent in suit and knowledge of infringement. *Commil USA, LLC v. Cisco Sys., Inc.*, 575 U.S. 632, 639 (2015) ("Like induced infringement, contributory infringement requires knowledge of the patent in suit and knowledge of patent infringement.") (*citing Aro Mfg. Co. v. Convertible Top Replacement Co.,* 377 U.S. 476, 488 (1964)). Contributory infringement requires demonstration that the alleged infringer knew that alleged infringing products are material to practicing the invention, knew that

the alleged infringing products were especially made or especially adapted to infringe the patents, and the third party used the alleged infringing products to directly infringe. *Gold Crest, LLC v. Project Light, LLC*, 525 F. Supp. 3d 826, 841 (N.D. Ohio 2021) (*citing DSU Med. Corp. v. JMS Co., Ltd.*, 471 F.3d 1293, 1303 (Fed. Cir. 2006)).

The Accused Products are not components for assembly in some larger, claimed system. The Accused Products are mouthpieces. The Accused Products are not especially made or adapted to infringe the patents. The Asserted Patents do not claim some system that incorporates a dental mouthpiece into some larger claims system or method. The Asserted Patents neither claim a system nor a method. It is unclear what Solmetex refers to when they state "[t]o the extent Ascentcare contends that it or its Accused Instrumentalities **do not perform each and every step of the asserted claims**, Ascentcare directs or controls the performance by others." (emphasis added). The Asserted Patents claim only a mouthpiece and not any larger configuration or process by which a mouthpiece is used along a variety of steps. While creative, Solmetex's allegations of contributory infringement are baseless and deficiently pled.

IV. SOLMETEX HAS PROVIDED NO EVIDENCE THAT ITS DRYSHIELD PRODUCT EMBODIES THE ASSERTED PATENTS.

To date, despite being served with interrogatories seeking identification of each dental mouthpiece that Solmetex contends embodies its patents, Solmetex has failed to identify any of its own mouthpieces despite its allegations in its complaint. Indeed, in certain of its discovery responses, it appears that Solmetex will not even admit that its own mouthpieces are embodied in its own patents. Additionally, it appears that Solmetex believes that it needs "expert discovery" or "expert testimony" to figure out whether its own mouthpieces embody its own patent claims. It is Solmetex's burden to prove its products practice the Asserted Patents, and if so, which claims

of which patents. Solmetex has failed to do so. To the extent that Solmetex later supplements its deficient discovery responses, Ascentcare reserves the right to supplement these contentions.

V. NO WILLFUL INFRINGEMENT

Ascentcare does not willfully infringe the Asserted Claims of the Asserted Patents. Solmetex mistakenly conflates knowledge of the patents as knowledge of infringement and mistakenly conflates a decision to continue sales in the face of an invalid patent portfolio as willful infringement. While Solmetex bears the burden for its allegations of willful infringement, Ascentcare does not willfully infringe for the reasons set forth in both its Answer and below.

The Accused Products were designed after features known in the public domain, as dental isolation mouthpieces designed to be connected to an evacuation conduit have been present in the United States since the 1960s. None of the Asserted Patents existed when Ascentcare designed its original mouthpiece design. While related patent U.S. Patent No. 8,911,232 (not asserted) did exist during the initial design of Ascentcare's first mouthpiece, Ascentcare was unconcerned because the '232 Patent described a very different mouthpiece design, as does its successors.

Solmetex sent Ascentcare a letter on May 17, 2023, asserting infringement of the '969 Patent,[3] '970 Patent, '438 Patent and '439 Patent. The May 17, 2023 letter also mentioned other patents not asserted in this matter. On September 6, 2023, Solmetex sent Ascentcare another letter claiming infringement of the '686 Patent and two design patents not asserted in this matter.

Solmetex served its original complaint on September 16, 2024 asserting infringement of the '969 Patent, '970 Patent, '686 Patent, '217 Patent, '329 Patent, '438 Patent, '439 Patent, '505 Patent (since dropped) and '436 Patent. ECF 1. Solmetex served its first amended complaint on

[3] While Solmetex states the full patent number, it mistakenly referred to the '969 Patent as the '696 Patent, not to be confused with the other asserted '686 Patent. This mistake has carried through to Solmetex's complaint, first amended complaint, and second amended complaint., Despite this error, Ascentcare will assume that Solmetex provided notice of the '969 Patent.

February 20, 2025, adding the ’948 Patent. ECF 13. Solmetex served its second amended complaint on June 27, 2025 adding the ’418 Patent.

To date, despite Ascentcare’s service of discovery seeking such information, Solmetex has failed to produce any evidence that it has marked its products. Solmetex therefore relies on knowledge of infringement and notice of specific infringement for its allegations of willful infringement and damages. See 35 U.S.C. § 287 (a); see also *Arctic Cat Inc. v. Bombardier Recreational Prods. Inc.*, 950 F.3d 860, 864 (Fed. Cir. 2020) (“[i]f… a patentee makes or sells a patented article and fails to mark in accordance with § 287, the patentee cannot collect damages until it either begins providing notice or sues the alleged infringer—the ultimate form of notice—and then only for the period after notification or suit has occurred”); see also *Nike, Inc. v. Wal-Mart Stores, Inc.*, 138 F.3d 1437, 1446 (Fed. Cir. 1998) (§ 287 applies to design patents). Notice must be provided even if the alleged infringer is aware of the patents-in-suit, and that burden rests on the patentee. *Arctic Cat Inc.*, 950 F.3d at 866; see also *Lubby Holdings LLC v. Chung*, 11 F.4th 1355 (Fed. Cir. 2021) (accused infringer’s notice of the existence of the patent-in-suit does not equate to notice of infringement under Section 287).

Under Section 287, providing actual notice of alleged infringement requires the patentee to provide “affirmative communication of a specific charge of infringement by a specific accused product or device.” *Arctic Cat*, 950 F.3d at 864; *see also Amsted Indus. Inc. v. Buckeye Steel Castings Co.*, 24 F.3d 178, 187 (Fed. Cir. 1994). Further, a patentee is only entitled to damages from the date it provided actual notice of the alleged infringement to the alleged infringer. *Am. Med. Sys., Inc. v. Med. Eng’g Corp.*, 6 F.3d 1523, 1537 (Fed. Cir. 1993) (“[patentee] is entitled to damages from the time when it either began marking its products in compliance with section 287(a) or when it actually notified [accused infringer] of its infringement, whichever was earlier”); The

burden of proving either marking or actual notice under Section 287 is on the patentee. *Dunlap v. Schofield*, 152 U.S. 244, 248 (1894) (cited with approval by *Arctic Cat*, 950 F.3d at 866.).

Ascentcare was provided mixed notice of infringement (*i.e.*, Solmetex did not provide notice of infringement for certain patents for both of Ascentcare's products) —not just knowledge of the patent—the following patents as of the following dates:

Patent	Date	Source
'969 Patent	5/17/2023	First Notice Letter
'970 Patent	5/17/2023	First Notice Letter
'686 Patent	9/06/2023	Second Notice Letter
'329 Patent	9/16/2024	Complaint
'418 Patent	6/27/2025	Second Amended Complaint
'217 Patent	9/16/2024	Complaint
'948 Patent	2/20/2025	Amended Complaint
'438 Patent	5/17/2023	First Notice Letter
'439 Patent	5/17/2023	First Notice Letter
'436 Patent	9/16/2024	Complaint

Solmetex alleges that because it mentioned other patents in its patent portfolio that Ascentcare was necessarily aware of infringement of the other patents it holds. This is nonsensical and insufficient. Awareness of a patent portfolio, however, does not establish knowledge of a specific patent and certainly not of infringement of that patent. See *Entropic Commc'ns, LLC v. Dish Network Corp.*, 702 F.Supp.3d 954, 966 (C.D. Cal. 2023) ("Generally, knowledge of a patent portfolio, as opposed to a specific, issued patent, does not support a claim for willful infringement.") Solmetex also

alleges that because Ascentcare was diligent in trying to track Solmetex's patent portfolio, Ascentcare tracking constitutes knowledge of infringement. Again, this conflates awareness of a patent with notice of infringement. It is also concerning that Solmetex contends Ascentcare's diligence and respect for the patents in the isolation mouthpiece market should be construed as evidence of willful behavior.

Willful infringement requires that any infringement be deliberate or intentional. *Eko Brands, LLC v. Adrian Rivera Maynez Enters., Inc.*, 946 F.3d 1367, 1378 (Fed. Cir. 2020). Thus, before there can be any willful infringement, the accused infringer must have knowledge of the patents ***and*** the alleged infringement. *Bench Walk Lighting LLC v. LG Innotek Co., Ltd.*, 530 F.Supp.3d 468, 491-93 (D. Del. 2021) (dismissing claim for alleged willful infringement that occurred prior to the filing of a lawsuit where the pre-suit notice letter was insufficient to put the accused infringer on notice of the alleged infringement). *See IPA Techs. Inc. v. Microsoft Corp.*, No. CV 18-1-RGA, 2024 WL 1797394, at *17 (D. Del. Apr. 25, 2024) (granting summary judgment of no willful infringement where the plaintiff failed to provide evidence of defendant's knowledge of potential infringement); *see also Intuitive Surgical, Inc. v. Auris Health, Inc.*, 549 F. Supp. 3d 362, 377-78 (D. Del. 2021) (granting summary judgment of no willful infringement because patentee asserted only knowledge of patent and alleged infringement). Further, the fact that a party continues to sell after being accused of infringement does not constitute willful behavior when it holds a good faith belief as to the invalidity of the relevant patents. See *Gustafson, Inc. v. Intersystems Indus. Products, Inc.*, 897 F.2d 508, 511 (Fed. Cir. 1990) ("a party may continue to manufacture and may present what in good faith it believes to be a legitimate defense without risk of being found on that basis alone a willful infringer.")

Ascentcare's conduct has been anything but willful. While Ascentcare does not believe that its first-generation product is either covered by the claims of the Asserted Patents nor does it believe that such patents are valid, Ascentcare discontinued sales of its first-generation product in May 2024 and endeavored to redesign the Ascentcare product with new and improved features. Further, Ascentcare received advice of counsel on both of its devices. Without waiving privilege, Ascentcare consulted with an attorney, Jim Schultz, when designing the original mouthpiece design and received a favorable opinion of non-infringement before beginning sales of the original mouthpiece design. Mr. Schultz tragically died in a car accident just days before Solmetex sent its first cease and desist letter asserting infringement of four, previously unknown to Ascentcare patents. Ascentcare consulted with another attorney, Peter Cummings, when designing the current mouthpiece design and received a favorable opinion of non-infringement before beginning sales of the current mouthpiece design.

Solmetex further contends that each of its Asserted Patents "enjoys a statutory presumption of validity." However, Ascentcare contends that each of Solmetex's Asserted Design Patents in this case was examined by the USPTO under the incorrect obviousness standard. *LKQ Corp. v. GM Glob. Tech. Operations LLC*, 102 F.4th 1280, 1293 (Fed. Cir. 2024) ("We conclude that the *Rosen-Durling* test requirements . . . . are improperly rigid.").

Relatedly, Ascentcare has a substantial and reasonable belief that Solmetex's patents are invalid or unenforceable. For example, several of the Asserted Patents took nearly a decade to issue. During that decade of prosecution, Solmetex was forced to concede significant scope of its patents to overcome the prior art, and to the extent that Solmetex now improperly construes its limited patent claims to cover Ascentcare's products, Ascentcare contends that the scope of those claims now capture the prior art that Solmetex expressly conceded.

Solmetex contends that Ascentcare was willful but fails to identify willful behavior. Solmetex contends that Ascentcare knew of the patents across a variety of dates but fails to identify what conduct Ascentcare performed that qualifies as intentional or deliberate. Further, Solmetex never moved to enjoin any behavior despite its claims of willful infringement. *See Dorman Prods., Inc. v. Paccar, Inc.*, 201 F. Supp. 3d 663, 681 (E.D. Pa. 2016), as amended (Oct. 17, 2016) ("Absent evidence of pre-filing willful infringement, a patentee who does not seek a preliminary injunction may not base a claim for willful infringement solely on the infringer's post-filing conduct.")

Ascentcare's conduct has not been willful, and if anything, has been cautious. Ascentcare has maintained its belief that Solmetex's patents are invalid and proceeded accordingly. *See Gustafson, Inc.*, 897 F.2d 511; *see also Richdel, Inc. v. Sunspool Corp.*, 714 F.2d 1573, 1580 (Fed Cir. 1983) ("The claim being invalid there is nothing to be infringed.")

Dated: July 18, 2025

Respectfully submitted,

/s/ Nathan P. Sportel

Nathan P. Sportel (P87032)
D. Andrew Portinga (P55804)
Jacob L. Carlton (P84859)
45 Ottawa Avenue SW, Suite 1100
Grand Rapids, MI 49503
Telephone: (616) 831-1700
sporteln@millerjohnson.com

Jason Keener
Lisa Holubar
Daniel Zhang
Alexander Bennett
150 N. Wacker Drive,
Suite 700, Chicago, IL 60606
Telephone: (312) 667-6080
jkeener@irwinip.com

CERTIFICATE OF SERVICE

I certify that a copy of the foregoing document was served via electronic mail on July 18, 2025 upon all counsel of record.

/s/ *Jennifer Frangella*
Jennifer Frangella