US009070374B2

(12) **United States Patent**
Konishi et al.

(10) **Patent No.: US 9,070,374 B2**
(45) **Date of Patent: Jun. 30, 2015**

(54) **COMMUNICATION APPARATUS AND CONDITION NOTIFICATION METHOD FOR NOTIFYING A USED CONDITION OF COMMUNICATION APPARATUS BY USING A LIGHT-EMITTING DEVICE ATTACHED TO COMMUNICATION APPARATUS**

(71) Applicant: **JVC KENWOOD Corporation**, Yokohama-Shi, Kanagawa-Ken (JP)

(72) Inventors: **Masaya Konishi**, Yokohama (JP); **Tatsuya Onoda**, Yokohama (JP)

(73) Assignee: **JVC KENWOOD Corporation**, Yokohama-shi, Kanagawa-ken (JP)

(*) Notice: Subject to any disclaimer, the term of this patent is extended or adjusted under 35 U.S.C. 154(b) by 209 days.

(21) Appl. No.: **13/770,236**

(22) Filed: **Feb. 19, 2013**

(65) **Prior Publication Data**

US 2013/0218575 A1 Aug. 22, 2013

(30) **Foreign Application Priority Data**

Feb. 20, 2012 (JP) 2012-034189
Feb. 20, 2012 (JP) 2012-034192

(51) **Int. Cl.**

G10L 21/06	(2013.01)
G10L 25/60	(2013.01)
H04B 1/401	(2015.01)
G10L 25/84	(2013.01)
H04B 1/46	(2006.01)

(52) **U.S. Cl.**

CPC ***G10L 21/06*** (2013.01); ***G10L 25/60*** (2013.01); ***H04B 1/401*** (2013.01); ***G10L 25/84*** (2013.01); ***H04B 1/46*** (2013.01)

(58) **Field of Classification Search**

USPC 704/275

See application file for complete search history.

(56) **References Cited**

U.S. PATENT DOCUMENTS

2008/0032624	A1*	2/2008	Abraham	455/11.1
2012/0053931	A1*	3/2012	Holzrichter	704/200.1
2013/0039503	A1*	2/2013	Beaucoup et al.	381/66

FOREIGN PATENT DOCUMENTS

JP	2000-106588	4/2000
JP	2004-120717	4/2004
JP	2010-28531	2/2010
JP	2010-279043	12/2010

OTHER PUBLICATIONS

Machine translation for JP 2000-106588, IDS, Apr. 2000.*

* cited by examiner

Primary Examiner — Qian Yang

(74) *Attorney, Agent, or Firm* — Renner, Kenner, Greive, Bobak, Taylor & Weber

(57) **ABSTRACT**

The used condition of a simplex communication apparatus is notified with a light-emitting device attached to the communication apparatus. It is determined whether a communication mode of the simplex communication apparatus is a transmission mode or a standby mode. A sound pick-up state of a sound carried by a speech signal to be transmitted is determined if the communication mode is the transmission mode. The light-emitting device is controlled so that it is turned off, turned on or repeatedly turned on and off based on determination results of the communication-mode determination and the sound pick-up state determination.

15 Claims, 28 Drawing Sheets

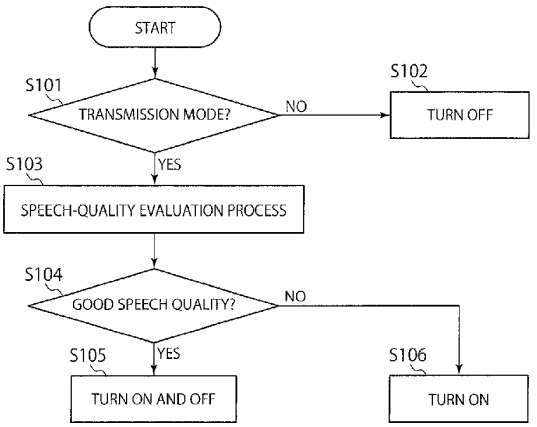

Amazon v. SoundClear
US Patent 9,070,374
Amazon EX-1001

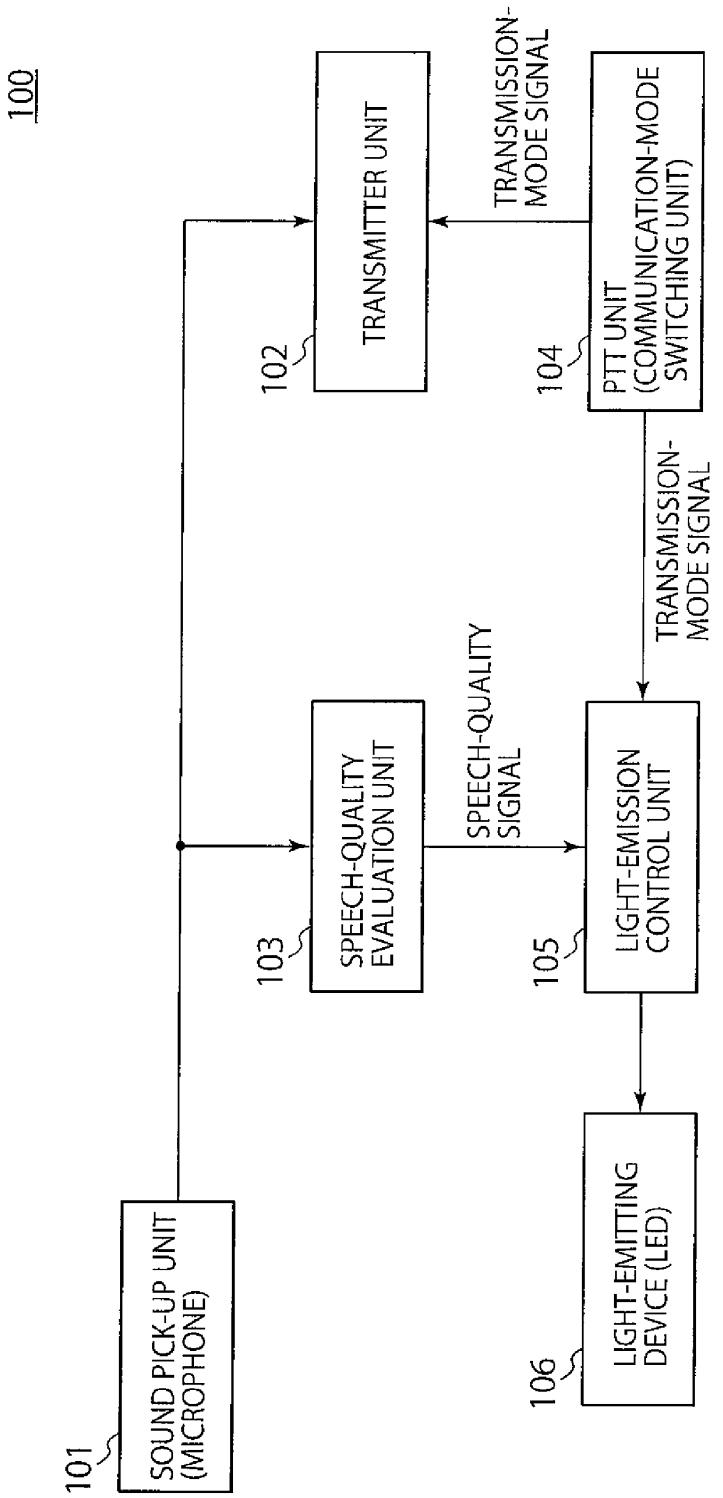
100
101
SOUND PICK-UP UNIT (MICROPHONE)
102
TRANSMITTER UNIT
103
SPEECH-QUALITY EVALUATION UNIT
104
PTT UNIT (COMMUNICATION-MODE SWITCHING UNIT)
105
LIGHT-EMISSION CONTROL UNIT
106
LIGHT-EMITTING DEVICE (LED)
TRANSMISSION-MODE SIGNAL
SPEECH-QUALITY SIGNAL
TRANSMISSION-MODE SIGNAL

FIG. 1

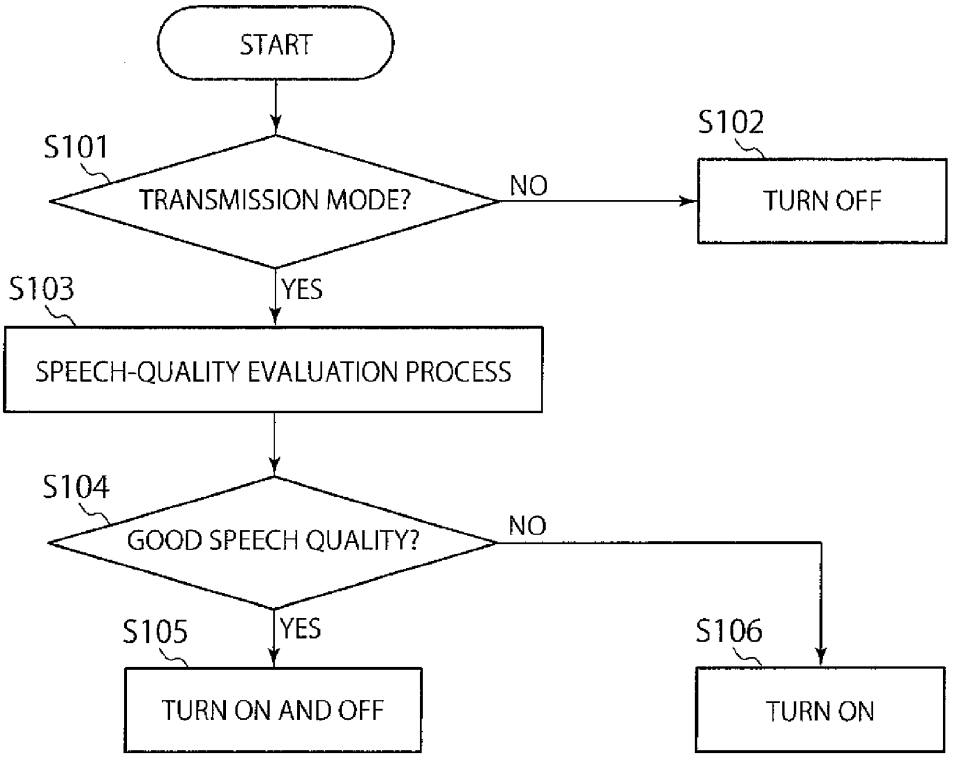
START
S101
TRANSMISSION MODE?
NO
S102
TURN OFF
YES
S103
SPEECH-QUALITY EVALUATION PROCESS
S104
GOOD SPEECH QUALITY?
NO
YES
S105
TURN ON AND OFF
S106
TURN ON

FIG. 2

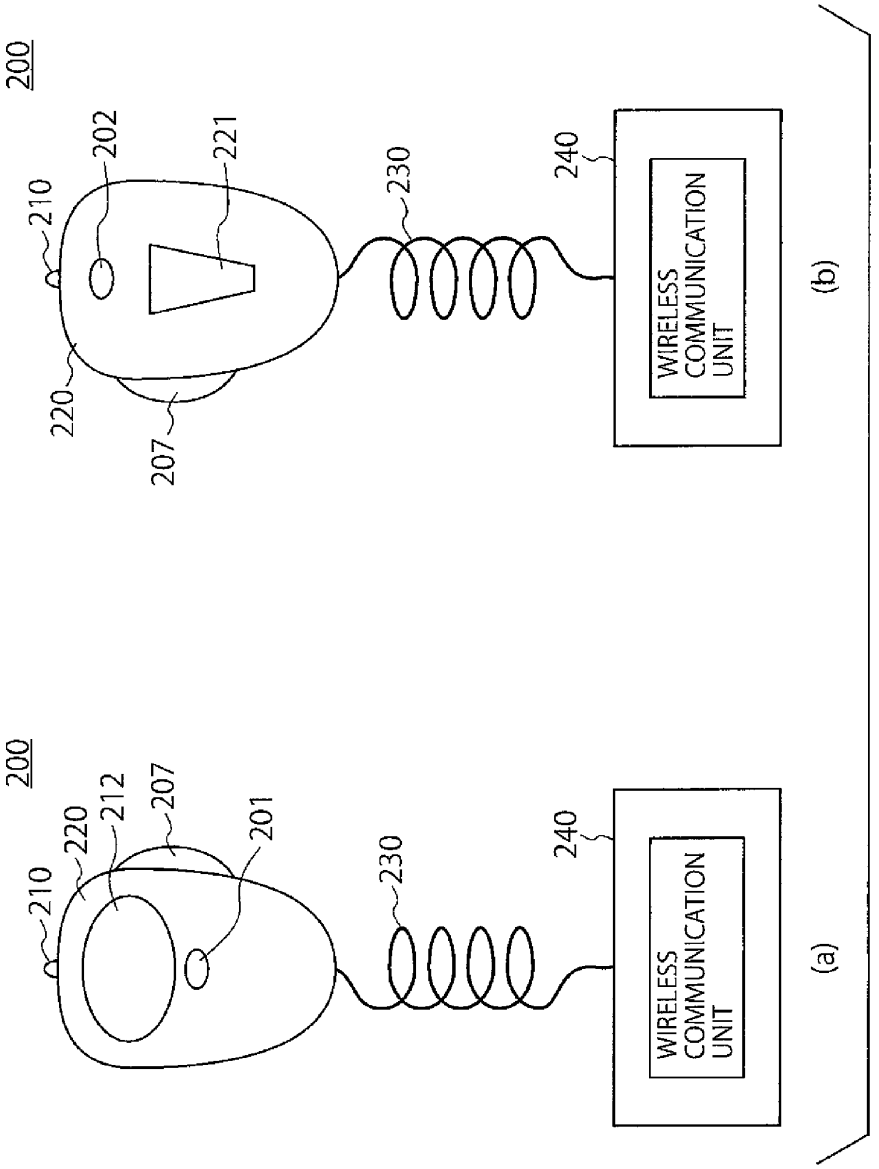
200
210
220
212
207
201
230
240
WIRELESS COMMUNICATION UNIT
(a)
200
210
202
221
220
207
230
240
WIRELESS COMMUNICATION UNIT
(b)

FIG. 3

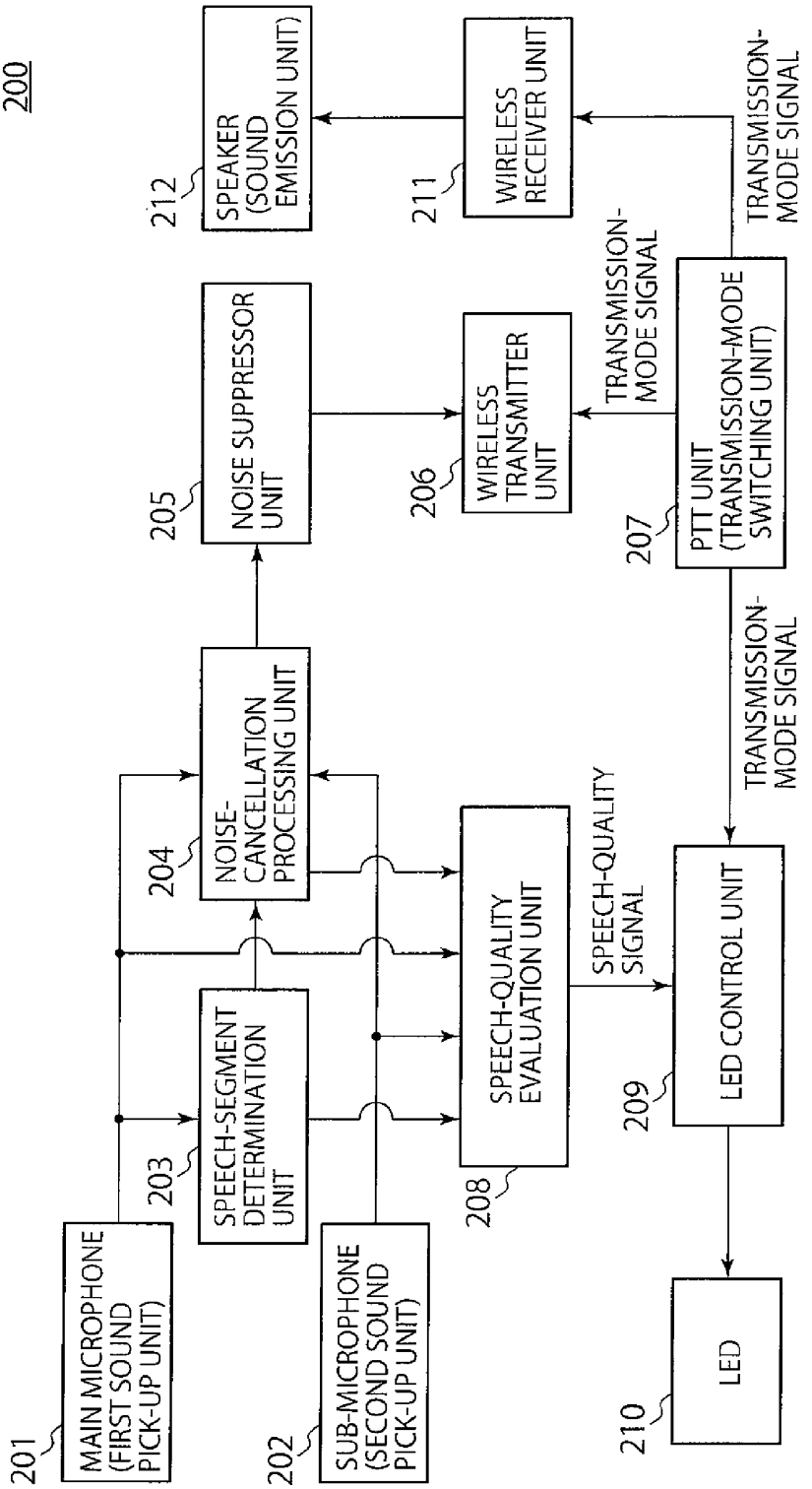
200
201
MAIN MICROPHONE (FIRST SOUND PICK-UP UNIT)
202
SUB-MICROPHONE (SECOND SOUND PICK-UP UNIT)
203
SPEECH-SEGMENT DETERMINATION UNIT
204
NOISE-CANCELLATION PROCESSING UNIT
205
NOISE SUPPRESSOR UNIT
206
WIRELESS TRANSMITTER UNIT
207
PTT UNIT (TRANSMISSION-MODE SWITCHING UNIT)
208
SPEECH-QUALITY EVALUATION UNIT
209
LED CONTROL UNIT
210
LED
211
WIRELESS RECEIVER UNIT
212
SPEAKER (SOUND EMISSION UNIT)
TRANSMISSION-MODE SIGNAL
TRANSMISSION-MODE SIGNAL
TRANSMISSION-MODE SIGNAL
SPEECH-QUALITY SIGNAL

FIG. 4

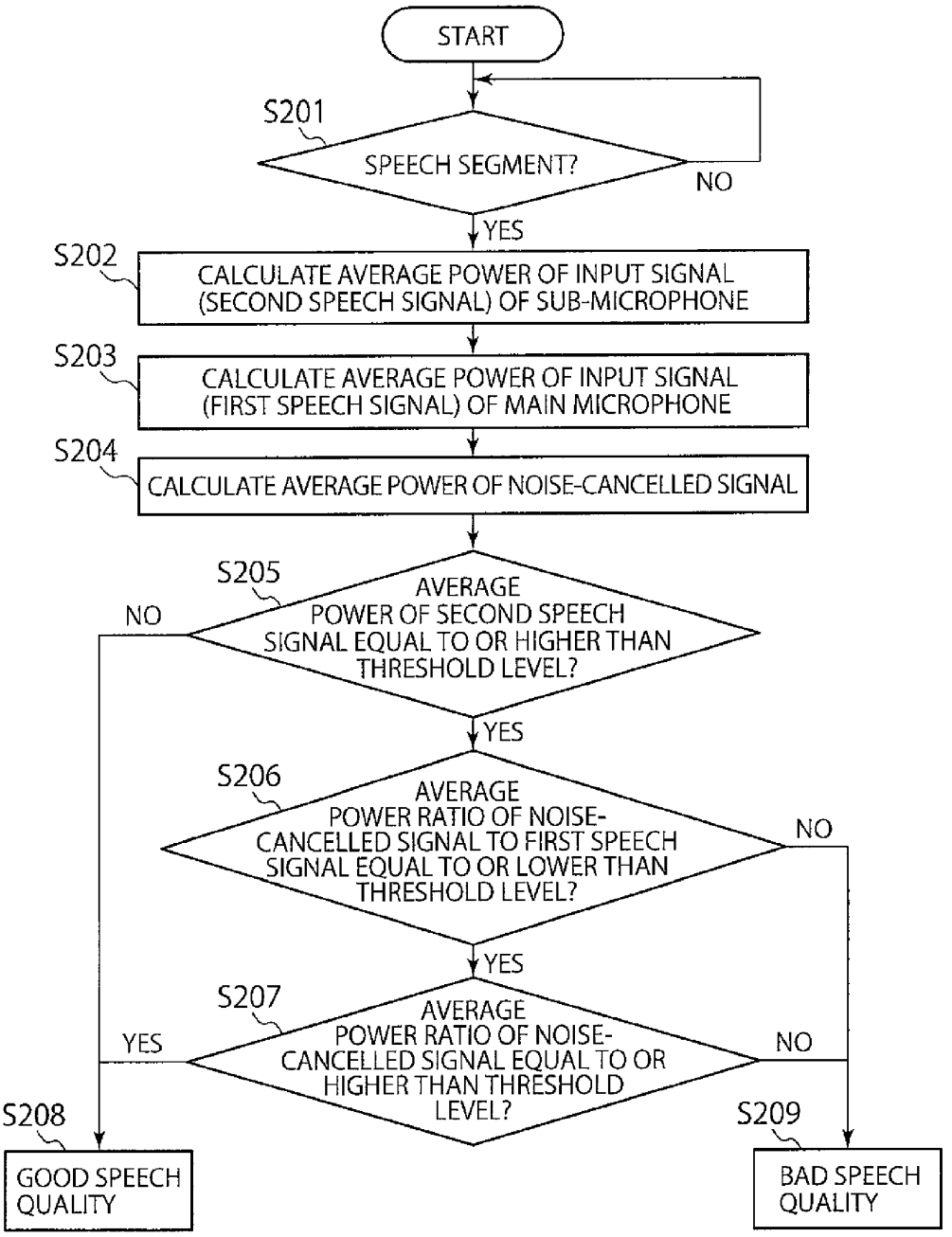
START
S201
SPEECH SEGMENT?
NO
YES
S202
CALCULATE AVERAGE POWER OF INPUT SIGNAL (SECOND SPEECH SIGNAL) OF SUB-MICROPHONE
S203
CALCULATE AVERAGE POWER OF INPUT SIGNAL (FIRST SPEECH SIGNAL) OF MAIN MICROPHONE
S204
CALCULATE AVERAGE POWER OF NOISE-CANCELLED SIGNAL
S205
AVERAGE POWER OF SECOND SPEECH SIGNAL EQUAL TO OR HIGHER THAN THRESHOLD LEVEL?
NO
YES
S206
AVERAGE POWER RATIO OF NOISE-CANCELLED SIGNAL TO FIRST SPEECH SIGNAL EQUAL TO OR LOWER THAN THRESHOLD LEVEL?
NO
YES
S207
AVERAGE POWER RATIO OF NOISE-CANCELLED SIGNAL EQUAL TO OR HIGHER THAN THRESHOLD LEVEL?
YES
NO
S208
GOOD SPEECH QUALITY
S209
BAD SPEECH QUALITY

FIG. 5

	TRANSMISSION-MODE SIGNAL (FROM PTT UNIT)	SPEECH-QUALITY SIGNAL (FROM SPEECH-QUALITY DETERMINATION UNIT)	LED STATE
No1	TRANSMISSION MODE (PTT UNIT PUSHED)	GOOD SPEECH QUALITY	TURN ON AND OFF
No2		BAD SPEECH QUALITY	TURN ON
No3		NO SIGNAL	TURN ON
No4	RECEPTION MODE (PTT UNIT NOT PUSHED)	NO SIGNAL	TURN OFF

FIG. 6

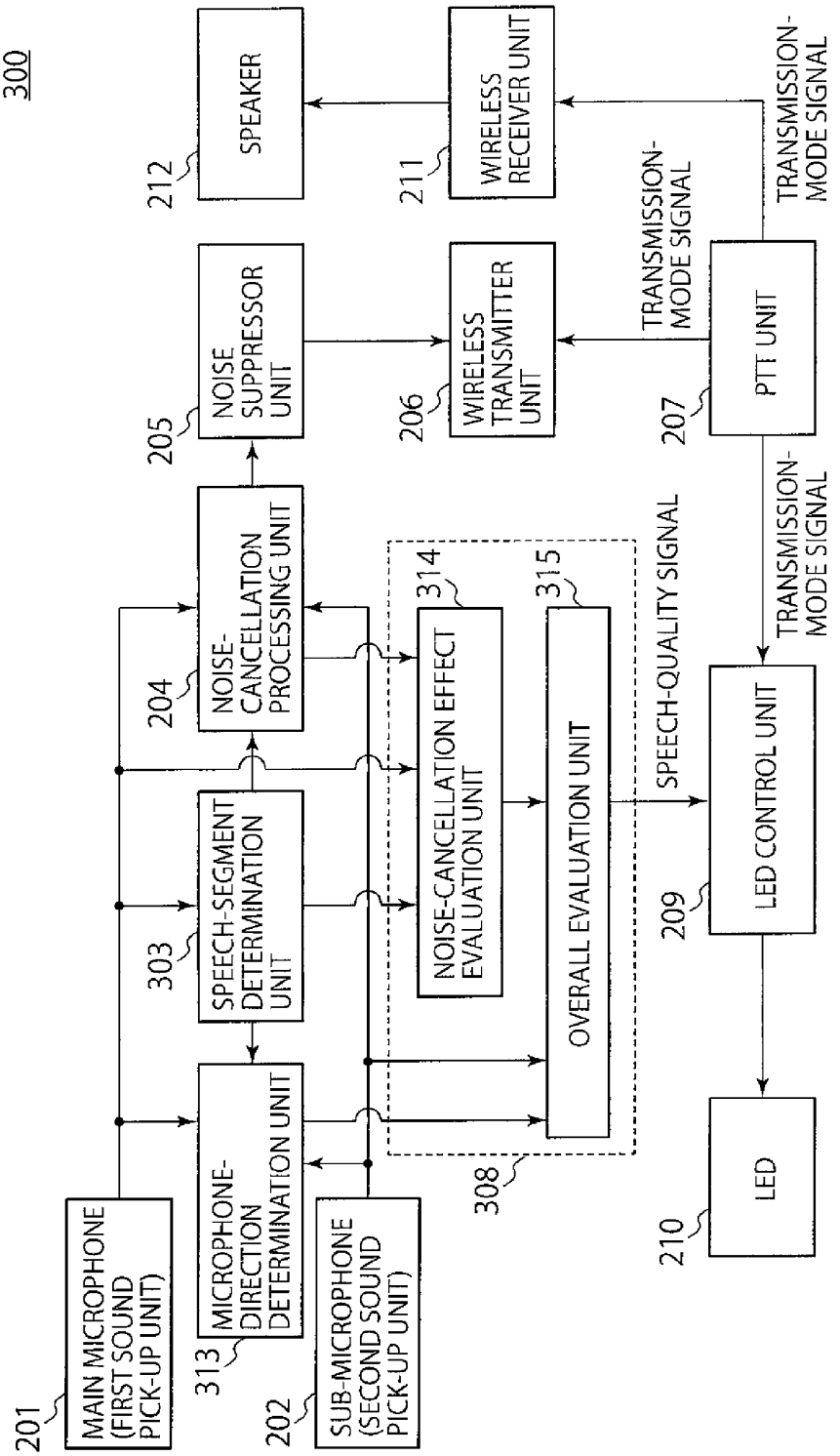
300
MAIN MICROPHONE (FIRST SOUND PICK-UP UNIT)
201
SUB-MICROPHONE (SECOND SOUND PICK-UP UNIT)
202
MICROPHONE-DIRECTION DETERMINATION UNIT
313
SPEECH-SEGMENT DETERMINATION UNIT
303
NOISE-CANCELLATION PROCESSING UNIT
204
NOISE SUPPRESSOR UNIT
205
SPEAKER
212
NOISE-CANCELLATION EFFECT EVALUATION UNIT
314
OVERALL EVALUATION UNIT
315
308
WIRELESS TRANSMITTER UNIT
206
WIRELESS RECEIVER UNIT
211
PTT UNIT
207
TRANSMISSION-MODE SIGNAL
TRANSMISSION-MODE SIGNAL
TRANSMISSION-MODE SIGNAL
SPEECH-QUALITY SIGNAL
LED CONTROL UNIT
209
LED
210

FIG. 7

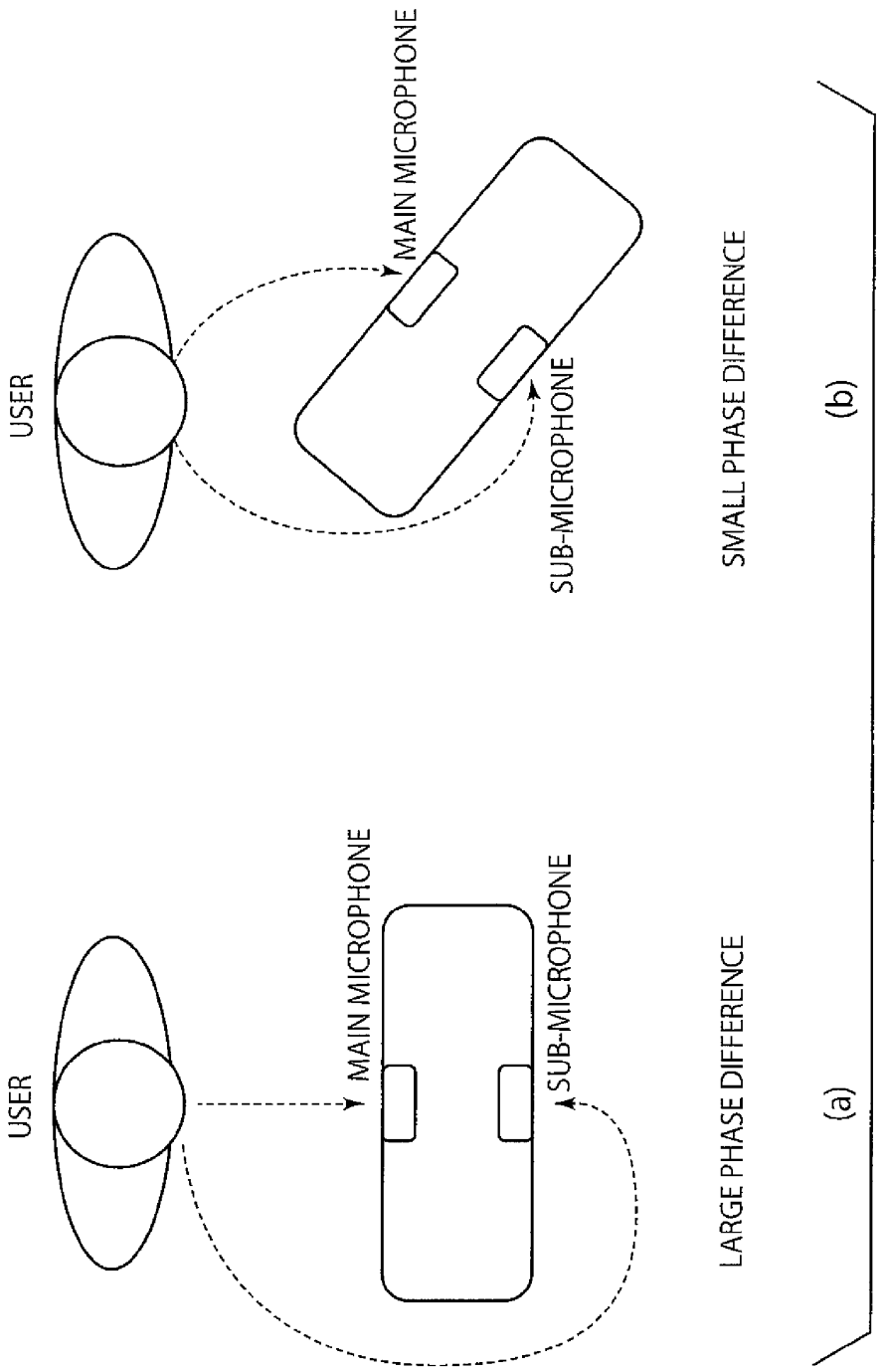
USER
MAIN MICROPHONE
SUB-MICROPHONE
LARGE PHASE DIFFERENCE
(a)
USER
MAIN MICROPHONE
SUB-MICROPHONE
SMALL PHASE DIFFERENCE
(b)

FIG. 8

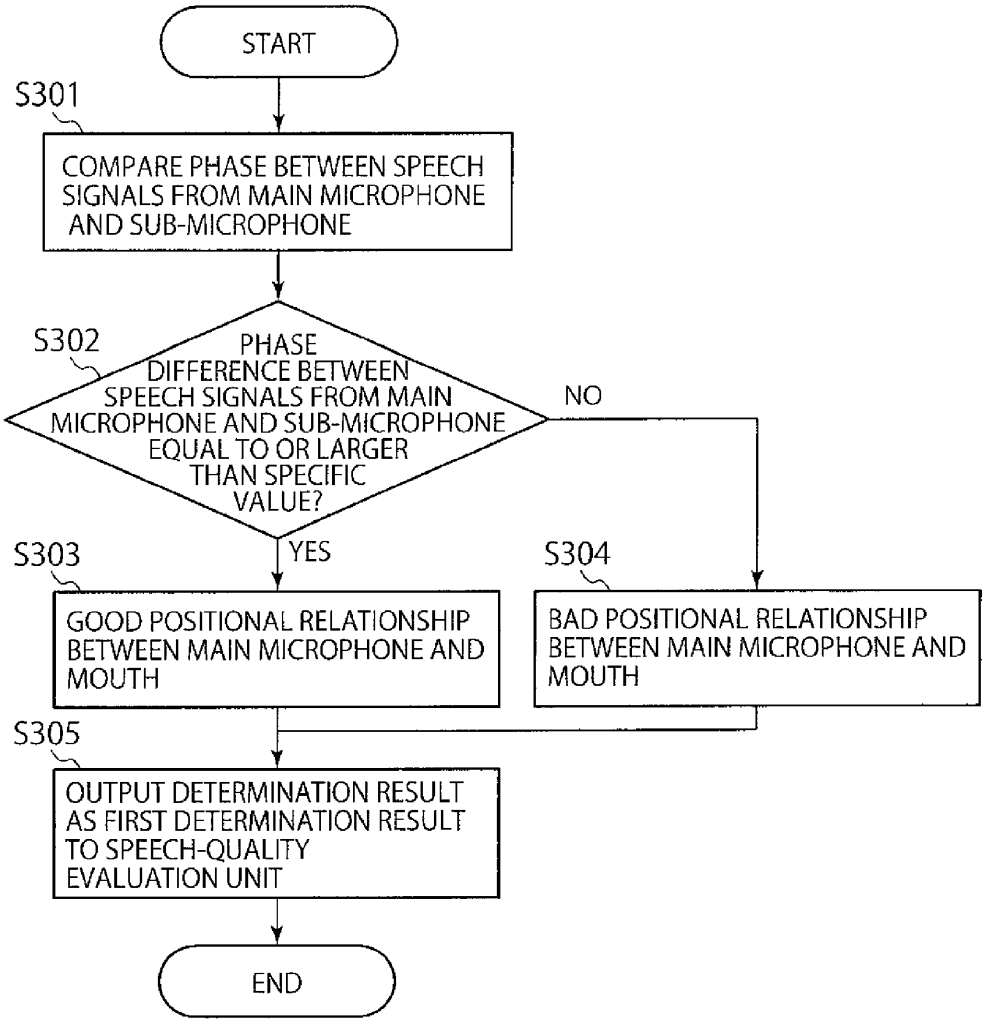
START
S301
COMPARE PHASE BETWEEN SPEECH SIGNALS FROM MAIN MICROPHONE AND SUB-MICROPHONE
S302
PHASE DIFFERENCE BETWEEN SPEECH SIGNALS FROM MAIN MICROPHONE AND SUB-MICROPHONE EQUAL TO OR LARGER THAN SPECIFIC VALUE?
NO
YES
S303
GOOD POSITIONAL RELATIONSHIP BETWEEN MAIN MICROPHONE AND MOUTH
S304
BAD POSITIONAL RELATIONSHIP BETWEEN MAIN MICROPHONE AND MOUTH
S305
OUTPUT DETERMINATION RESULT AS FIRST DETERMINATION RESULT TO SPEECH-QUALITY EVALUATION UNIT
END

FIG. 9

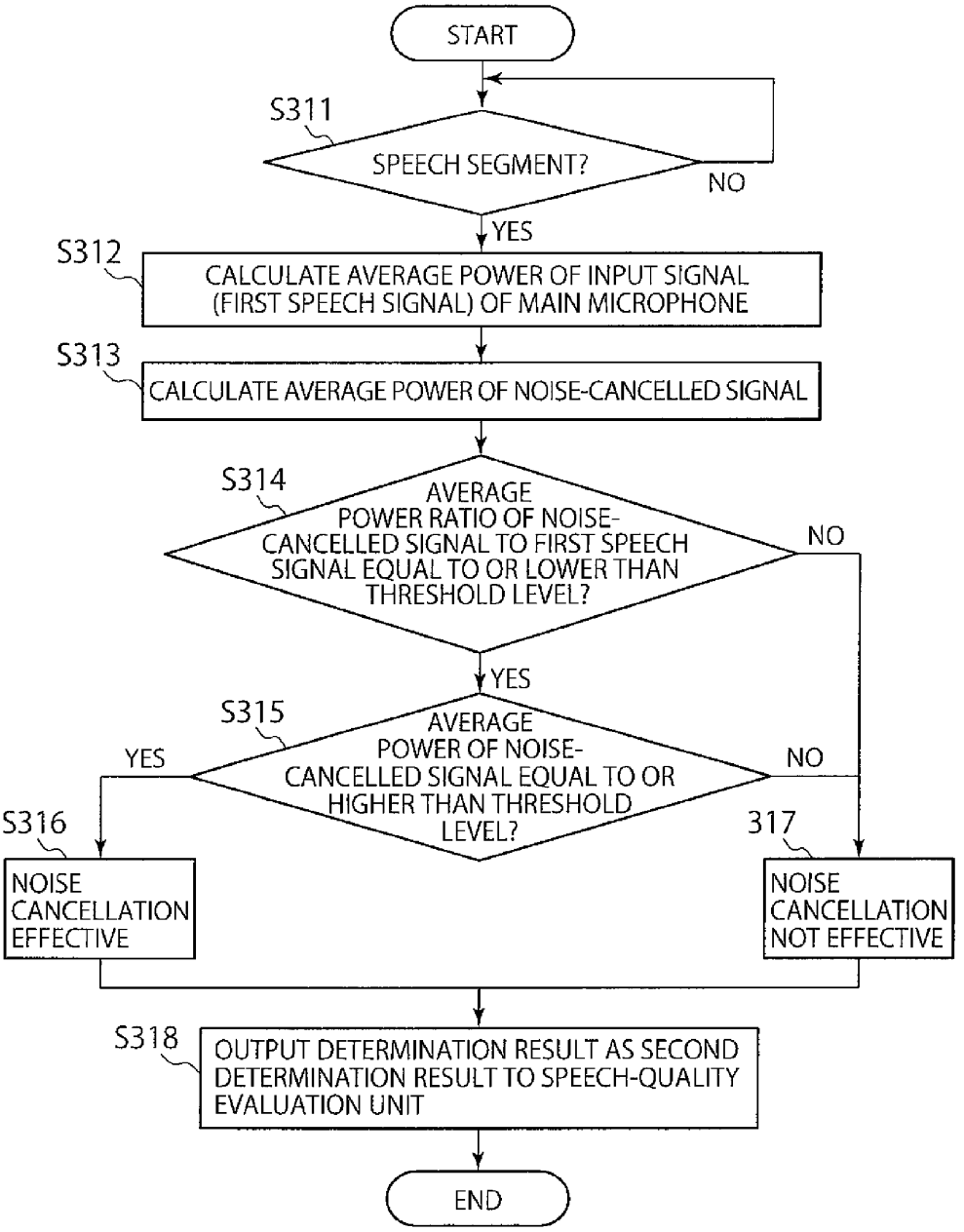
START
S311
SPEECH SEGMENT?
NO
YES
S312
CALCULATE AVERAGE POWER OF INPUT SIGNAL (FIRST SPEECH SIGNAL) OF MAIN MICROPHONE
S313
CALCULATE AVERAGE POWER OF NOISE-CANCELLED SIGNAL
S314
AVERAGE POWER RATIO OF NOISE-CANCELLED SIGNAL TO FIRST SPEECH SIGNAL EQUAL TO OR LOWER THAN THRESHOLD LEVEL?
NO
YES
S315
AVERAGE POWER OF NOISE-CANCELLED SIGNAL EQUAL TO OR HIGHER THAN THRESHOLD LEVEL?
YES
NO
S316
NOISE CANCELLATION EFFECTIVE
317
NOISE CANCELLATION NOT EFFECTIVE
S318
OUTPUT DETERMINATION RESULT AS SECOND DETERMINATION RESULT TO SPEECH-QUALITY EVALUATION UNIT
END

FIG. 10

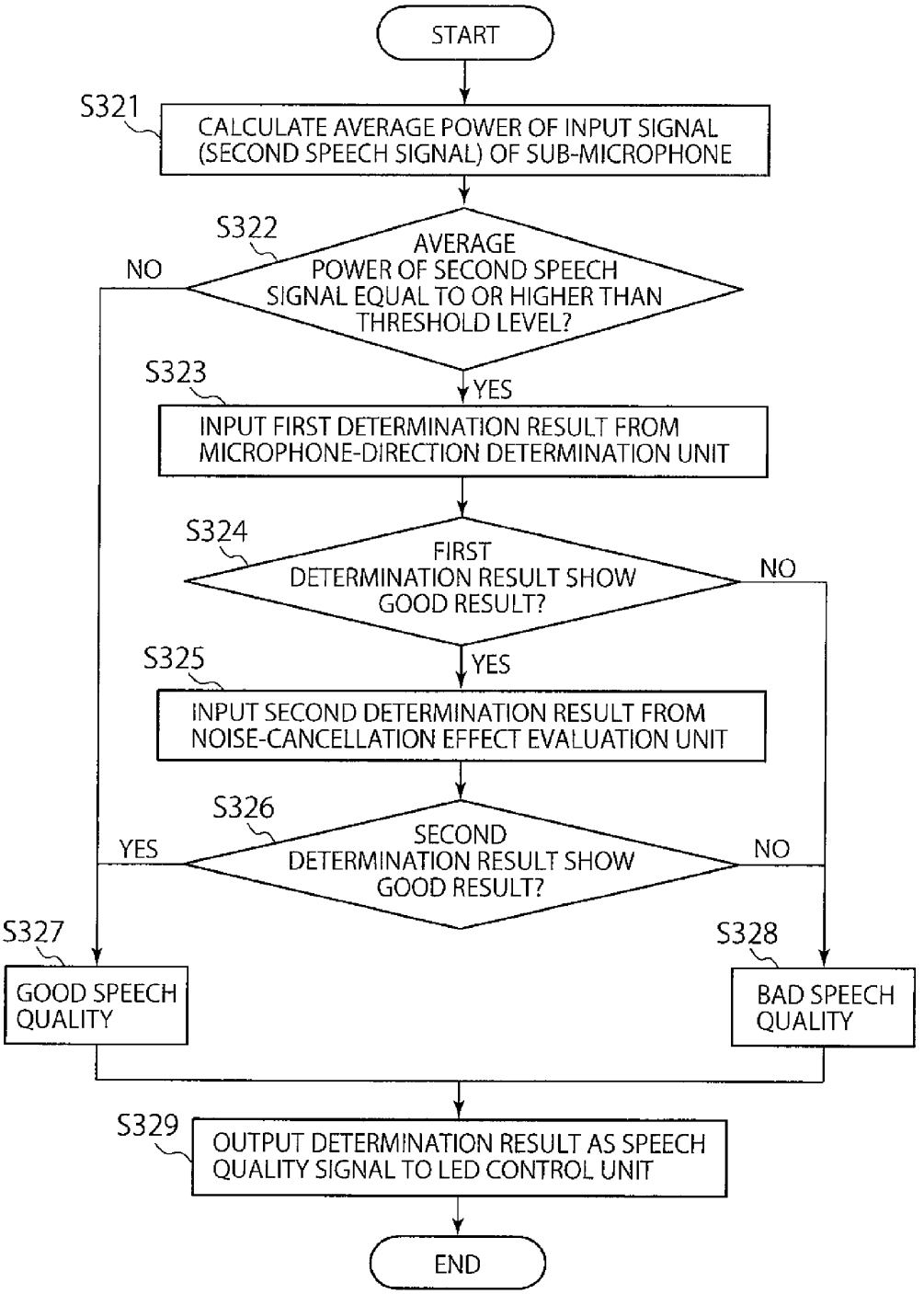
START
S321
CALCULATE AVERAGE POWER OF INPUT SIGNAL (SECOND SPEECH SIGNAL) OF SUB-MICROPHONE
S322
AVERAGE POWER OF SECOND SPEECH SIGNAL EQUAL TO OR HIGHER THAN THRESHOLD LEVEL?
NO
YES
S323
INPUT FIRST DETERMINATION RESULT FROM MICROPHONE-DIRECTION DETERMINATION UNIT
S324
FIRST DETERMINATION RESULT SHOW GOOD RESULT?
NO
YES
S325
INPUT SECOND DETERMINATION RESULT FROM NOISE-CANCELLATION EFFECT EVALUATION UNIT
S326
SECOND DETERMINATION RESULT SHOW GOOD RESULT?
YES
NO
S327
GOOD SPEECH QUALITY
S328
BAD SPEECH QUALITY
S329
OUTPUT DETERMINATION RESULT AS SPEECH QUALITY SIGNAL TO LED CONTROL UNIT
END

FIG. 11

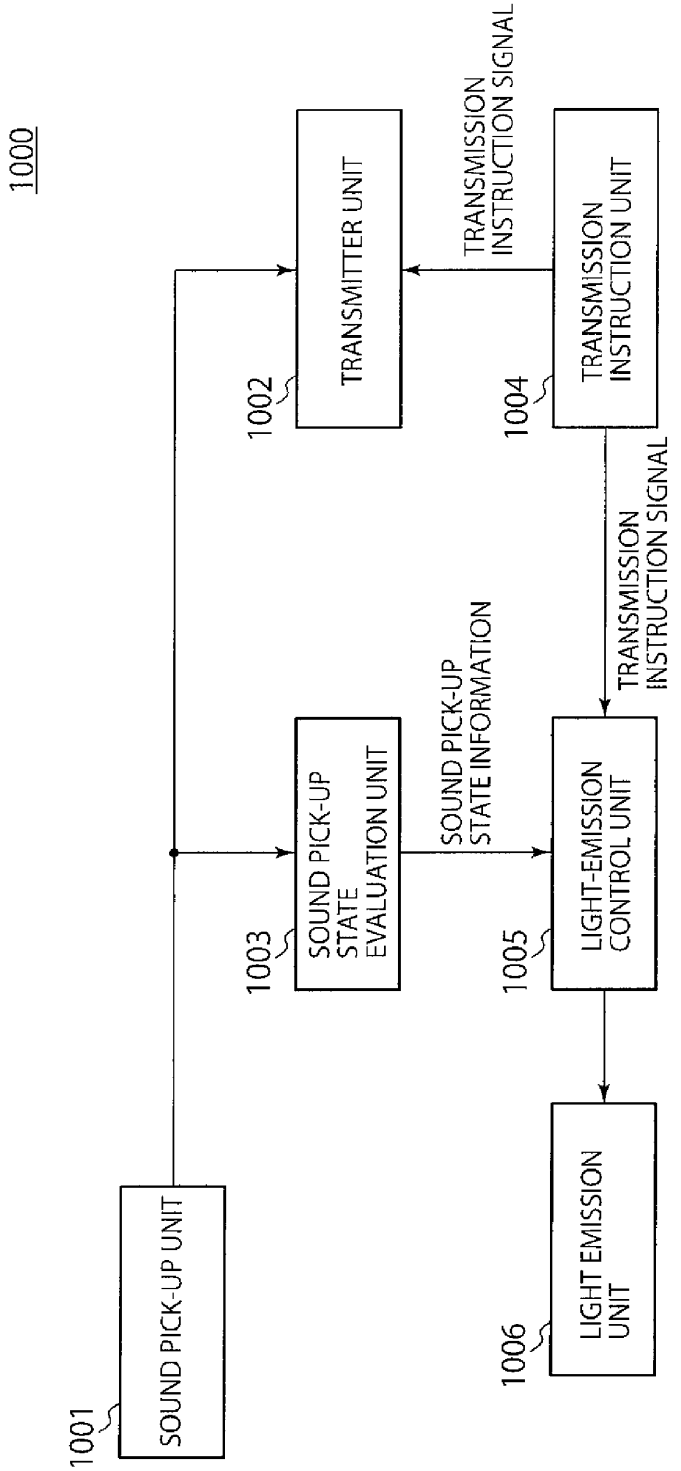
1000
1001
SOUND PICK-UP UNIT
1002
TRANSMITTER UNIT
1003
SOUND PICK-UP STATE EVALUATION UNIT
1004
TRANSMISSION INSTRUCTION UNIT
1005
LIGHT-EMISSION CONTROL UNIT
1006
LIGHT EMISSION UNIT
TRANSMISSION INSTRUCTION SIGNAL
SOUND PICK-UP STATE INFORMATION
TRANSMISSION INSTRUCTION SIGNAL

FIG. 12

	COMMUNICATION MODE	SOUND PICK-UP STATE DETERMINATION		LED STATE
		SPEECH SEGMENT DETERMINATION	SPEECH QUALITY DETERMINATION	
No1	STANDBY MODE (NO TRANSMISSION INSTRUCTION SIGNAL INPUT)	NO DETERMINATION	NO DETERMINATION	TURN OFF
No2	TRANSMISSION MODE (INPUT TRANSMISSION INSTRUCTION SIGNAL)	NON-SPEECH SEGMENT	NO DETERMINATION	TURN ON
No3		SPEECH SEGMENT	BAD SPEECH QUALITY	TURN ON
No4			GOOD SPEECH QUALITY	TURN ON AND OFF

FIG. 13

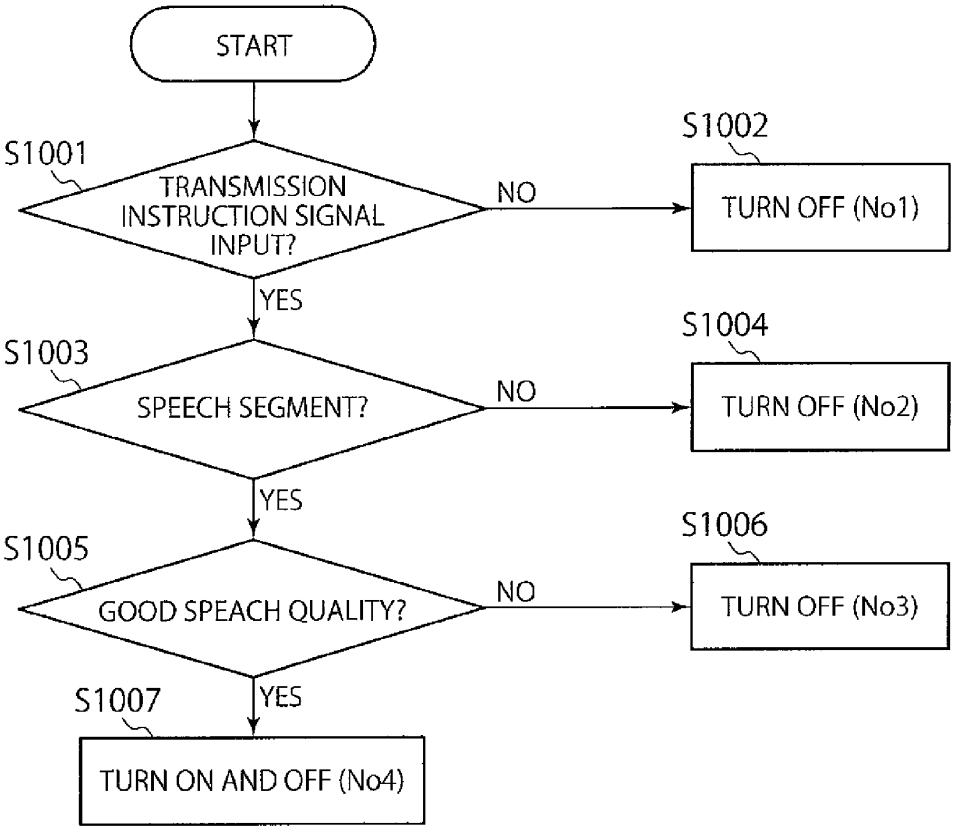
START
S1001
TRANSMISSION INSTRUCTION SIGNAL INPUT?
NO
S1002
TURN OFF (No1)
YES
S1003
SPEECH SEGMENT?
NO
S1004
TURN OFF (No2)
YES
S1005
GOOD SPEACH QUALITY?
NO
S1006
TURN OFF (No3)
YES
S1007
TURN ON AND OFF (No4)

FIG. 14

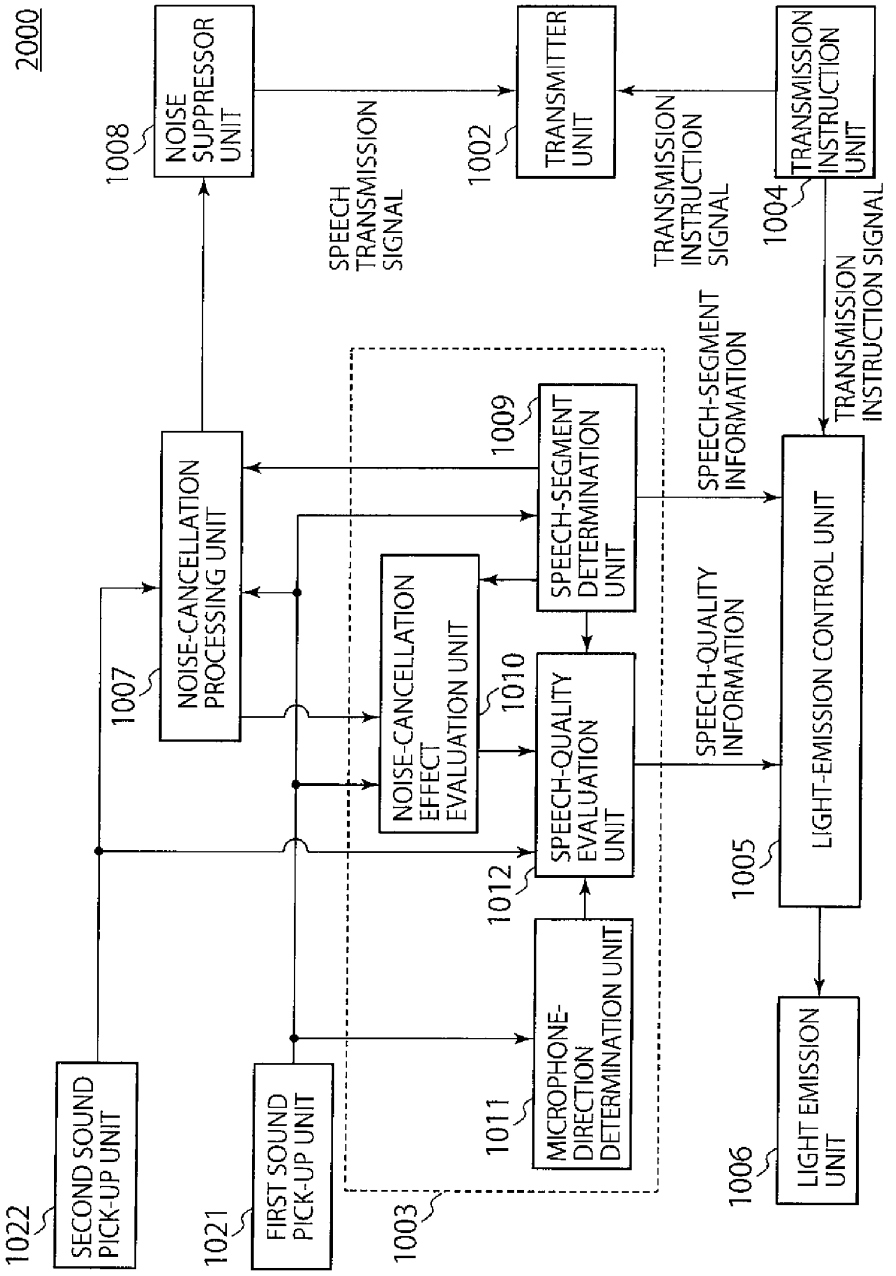
2000
1008
NOISE SUPPRESSOR UNIT
SPEECH TRANSMISSION SIGNAL
1002
TRANSMITTER UNIT
TRANSMISSION INSTRUCTION SIGNAL
1004
TRANSMISSION INSTRUCTION UNIT
TRANSMISSION INSTRUCTION SIGNAL
1007
NOISE-CANCELLATION PROCESSING UNIT
1009
SPEECH-SEGMENT DETERMINATION UNIT
SPEECH-SEGMENT INFORMATION
NOISE-CANCELLATION EFFECT EVALUATION UNIT
1010
SPEECH-QUALITY EVALUATION UNIT
SPEECH-QUALITY INFORMATION
1012
1005
LIGHT-EMISSION CONTROL UNIT
1011
MICROPHONE-DIRECTION DETERMINATION UNIT
1006
LIGHT EMISSION UNIT
1022
SECOND SOUND PICK-UP UNIT
1021
FIRST SOUND PICK-UP UNIT
1003

FIG. 15

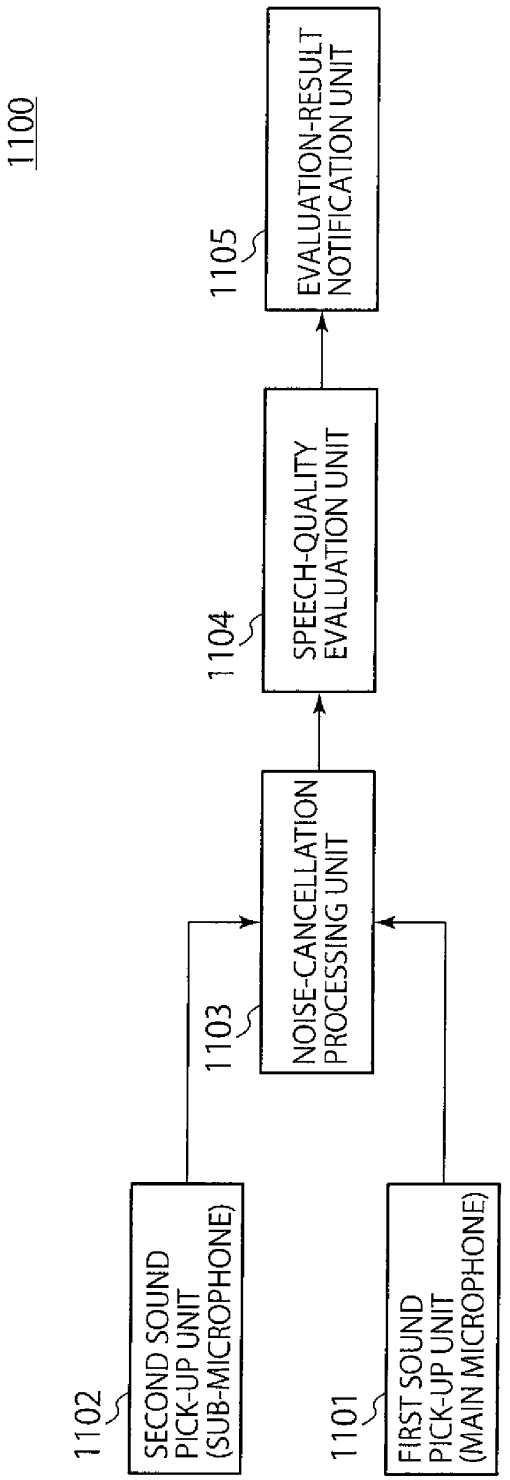
1100
1102
SECOND SOUND PICK-UP UNIT (SUB-MICROPHONE)
1101
FIRST SOUND PICK-UP UNIT (MAIN MICROPHONE)
1103
NOISE-CANCELLATION PROCESSING UNIT
1104
SPEECH-QUALITY EVALUATION UNIT
1105
EVALUATION-RESULT NOTIFICATION UNIT

FIG. 16

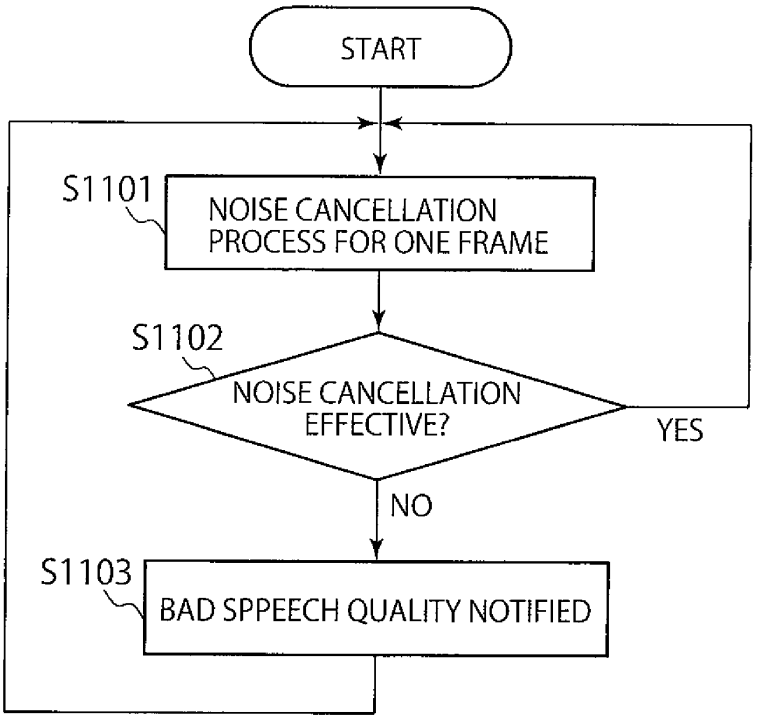
START
S1101
NOISE CANCELLATION PROCESS FOR ONE FRAME
S1102
NOISE CANCELLATION EFFECTIVE?
YES
NO
S1103
BAD SPPEECH QUALITY NOTIFIED

FIG. 17

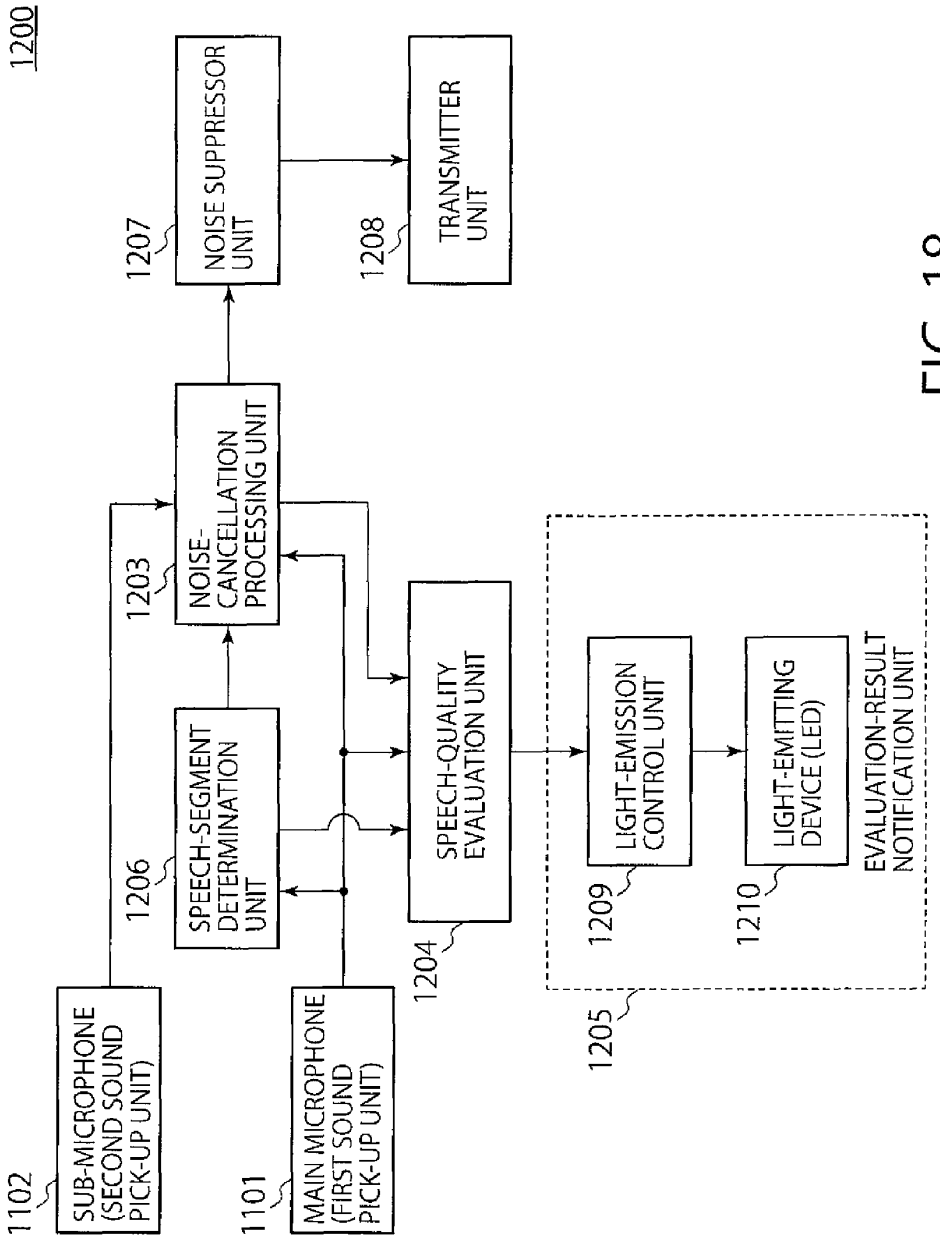
1200
1102
SUB-MICROPHONE (SECOND SOUND PICK-UP UNIT)
1101
MAIN MICROPHONE (FIRST SOUND PICK-UP UNIT)
1206
SPEECH-SEGMENT DETERMINATION UNIT
1203
NOISE-CANCELLATION PROCESSING UNIT
1207
NOISE SUPPRESSOR UNIT
1208
TRANSMITTER UNIT
1204
SPEECH-QUALITY EVALUATION UNIT
1205
1209
LIGHT-EMISSION CONTROL UNIT
1210
LIGHT-EMITTING DEVICE (LED)
EVALUATION-RESULT NOTIFICATION UNIT

FIG. 18

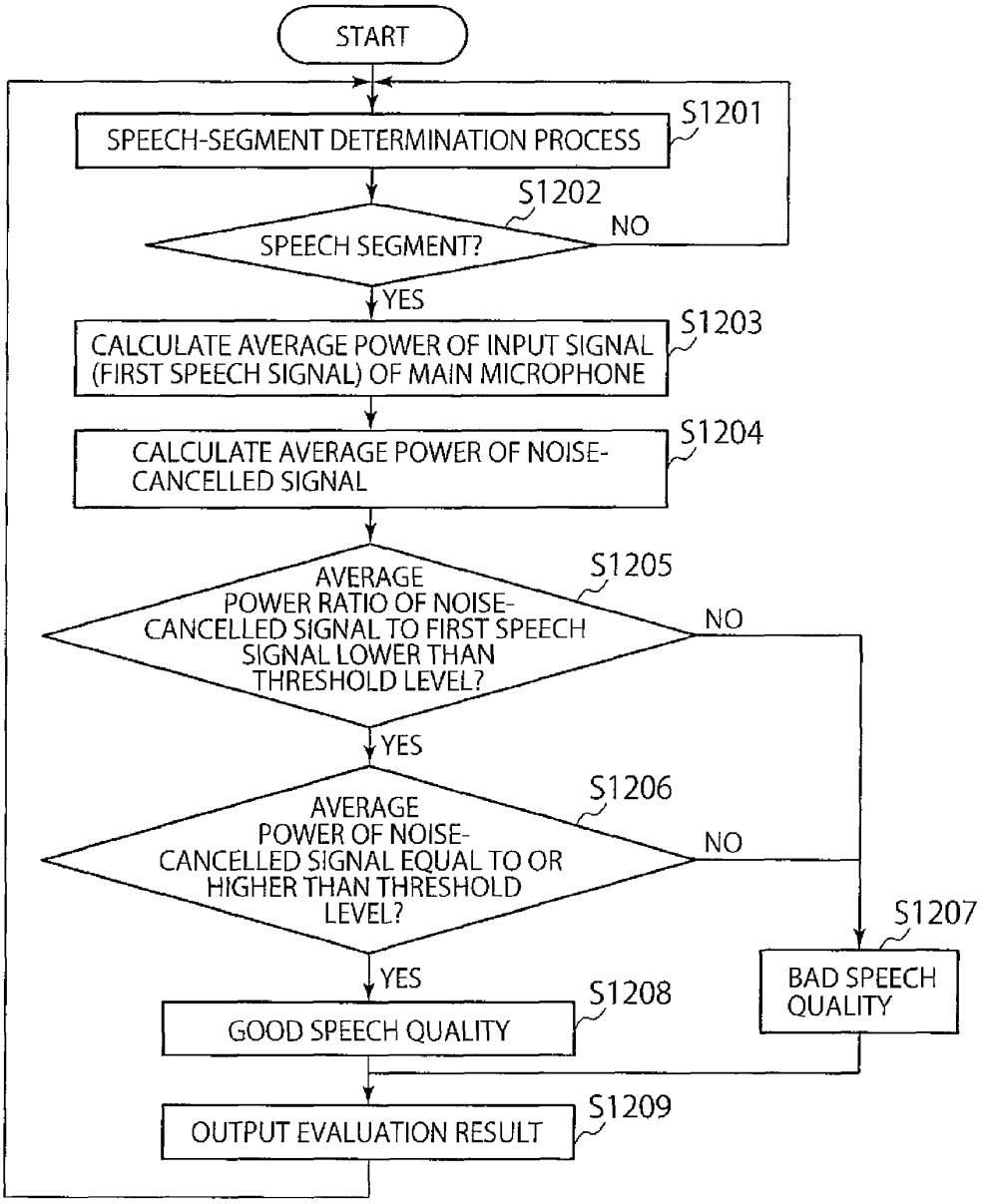
START
SPEECH-SEGMENT DETERMINATION PROCESS
S1201
S1202
SPEECH SEGMENT?
NO
YES
CALCULATE AVERAGE POWER OF INPUT SIGNAL (FIRST SPEECH SIGNAL) OF MAIN MICROPHONE
S1203
CALCULATE AVERAGE POWER OF NOISE-CANCELLED SIGNAL
S1204
AVERAGE POWER RATIO OF NOISE-CANCELLED SIGNAL TO FIRST SPEECH SIGNAL LOWER THAN THRESHOLD LEVEL?
S1205
NO
YES
AVERAGE POWER OF NOISE-CANCELLED SIGNAL EQUAL TO OR HIGHER THAN THRESHOLD LEVEL?
S1206
NO
YES
S1207
BAD SPEECH QUALITY
GOOD SPEECH QUALITY
S1208
OUTPUT EVALUATION RESULT
S1209

FIG. 19

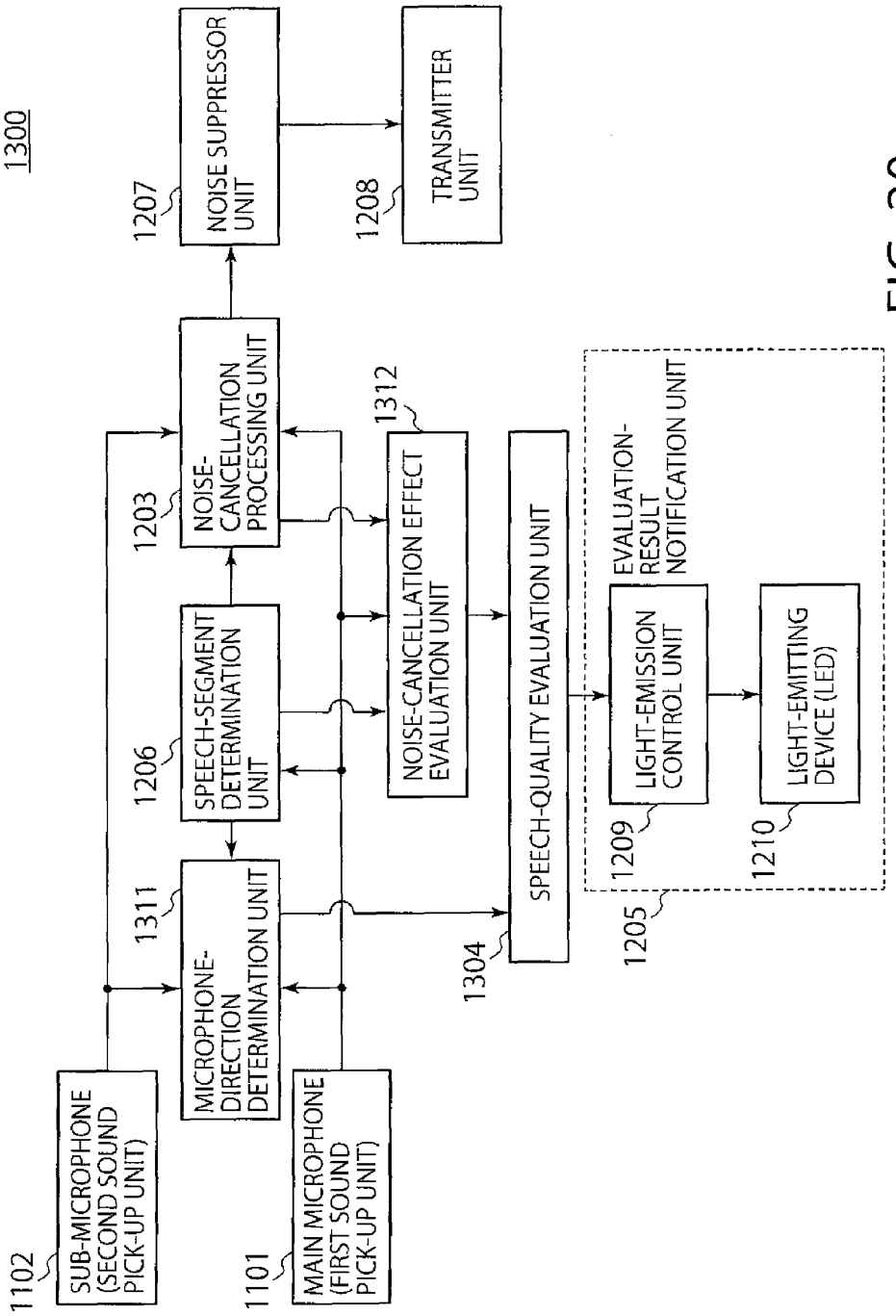
1300
1102
SUB-MICROPHONE (SECOND SOUND PICK-UP UNIT)
1101
MAIN MICROPHONE (FIRST SOUND PICK-UP UNIT)
1311
MICROPHONE-DIRECTION DETERMINATION UNIT
1206
SPEECH-SEGMENT DETERMINATION UNIT
1203
NOISE-CANCELLATION PROCESSING UNIT
1207
NOISE SUPPRESSOR UNIT
1208
TRANSMITTER UNIT
1312
NOISE-CANCELLATION EFFECT EVALUATION UNIT
1304
SPEECH-QUALITY EVALUATION UNIT
1205
EVALUATION-RESULT NOTIFICATION UNIT
1209
LIGHT-EMISSION CONTROL UNIT
1210
LIGHT-EMITTING DEVICE (LED)

FIG. 20

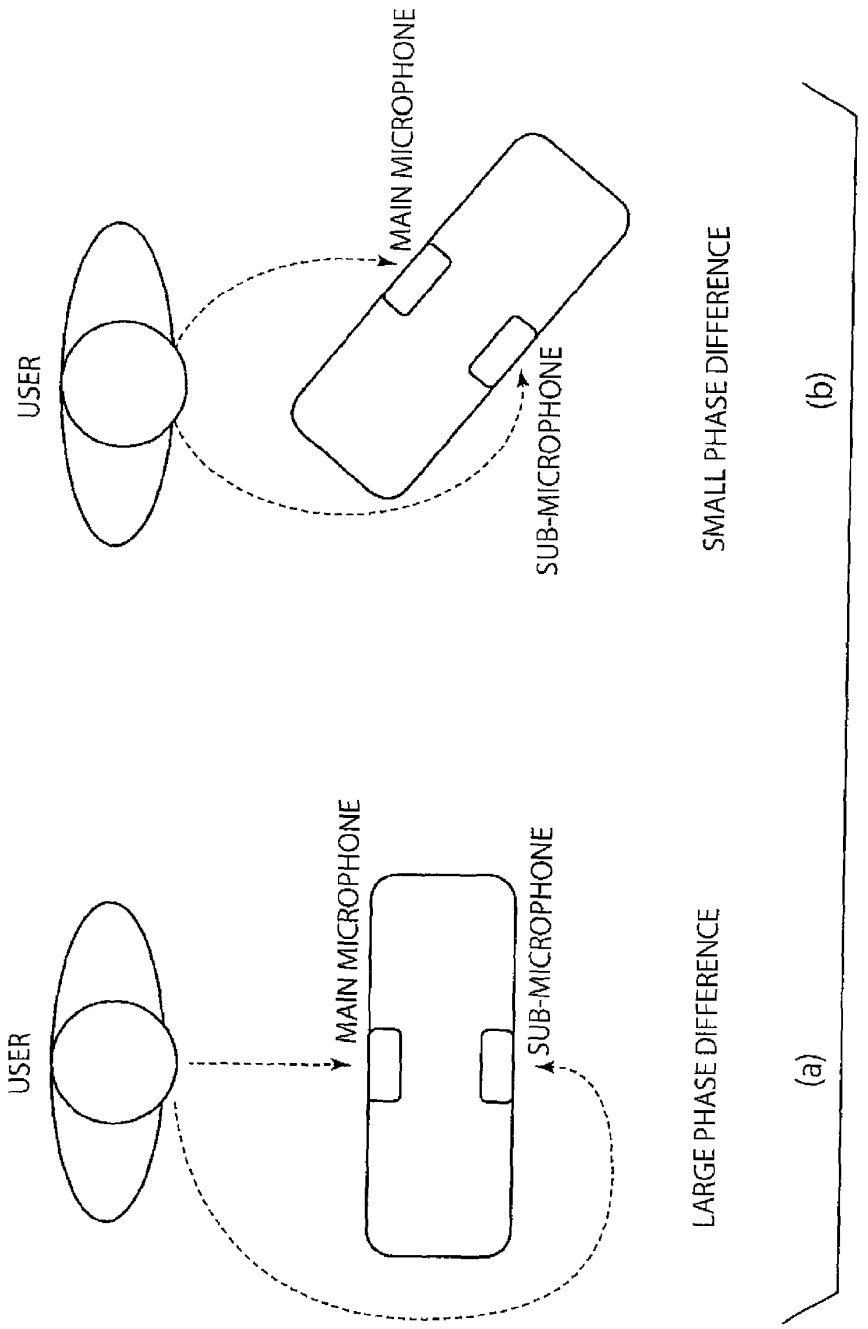
USER
MAIN MICROPHONE
SUB-MICROPHONE
LARGE PHASE DIFFERENCE
(a)
USER
MAIN MICROPHONE
SUB-MICROPHONE
SMALL PHASE DIFFERENCE
(b)

FIG. 21

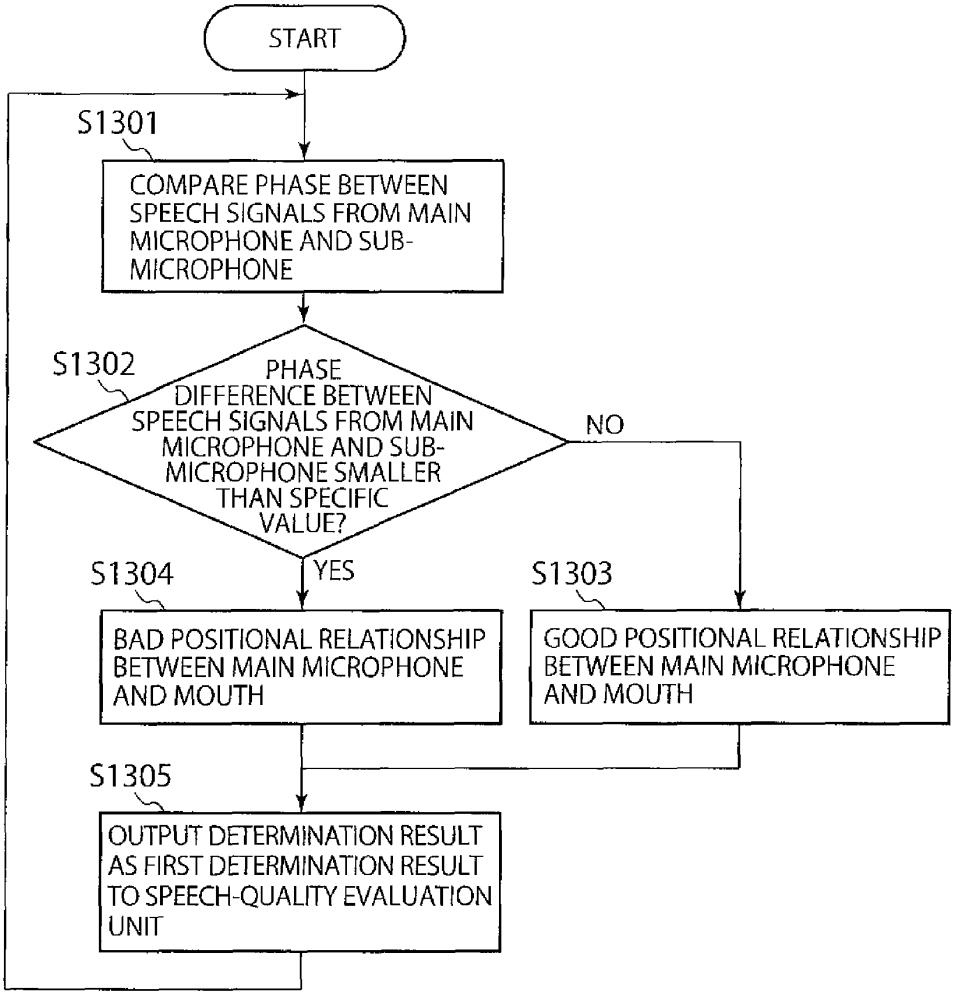
START
S1301
COMPARE PHASE BETWEEN SPEECH SIGNALS FROM MAIN MICROPHONE AND SUB-MICROPHONE
S1302
PHASE DIFFERENCE BETWEEN SPEECH SIGNALS FROM MAIN MICROPHONE AND SUB-MICROPHONE SMALLER THAN SPECIFIC VALUE?
NO
YES
S1304
BAD POSITIONAL RELATIONSHIP BETWEEN MAIN MICROPHONE AND MOUTH
S1303
GOOD POSITIONAL RELATIONSHIP BETWEEN MAIN MICROPHONE AND MOUTH
S1305
OUTPUT DETERMINATION RESULT AS FIRST DETERMINATION RESULT TO SPEECH-QUALITY EVALUATION UNIT

FIG. 22

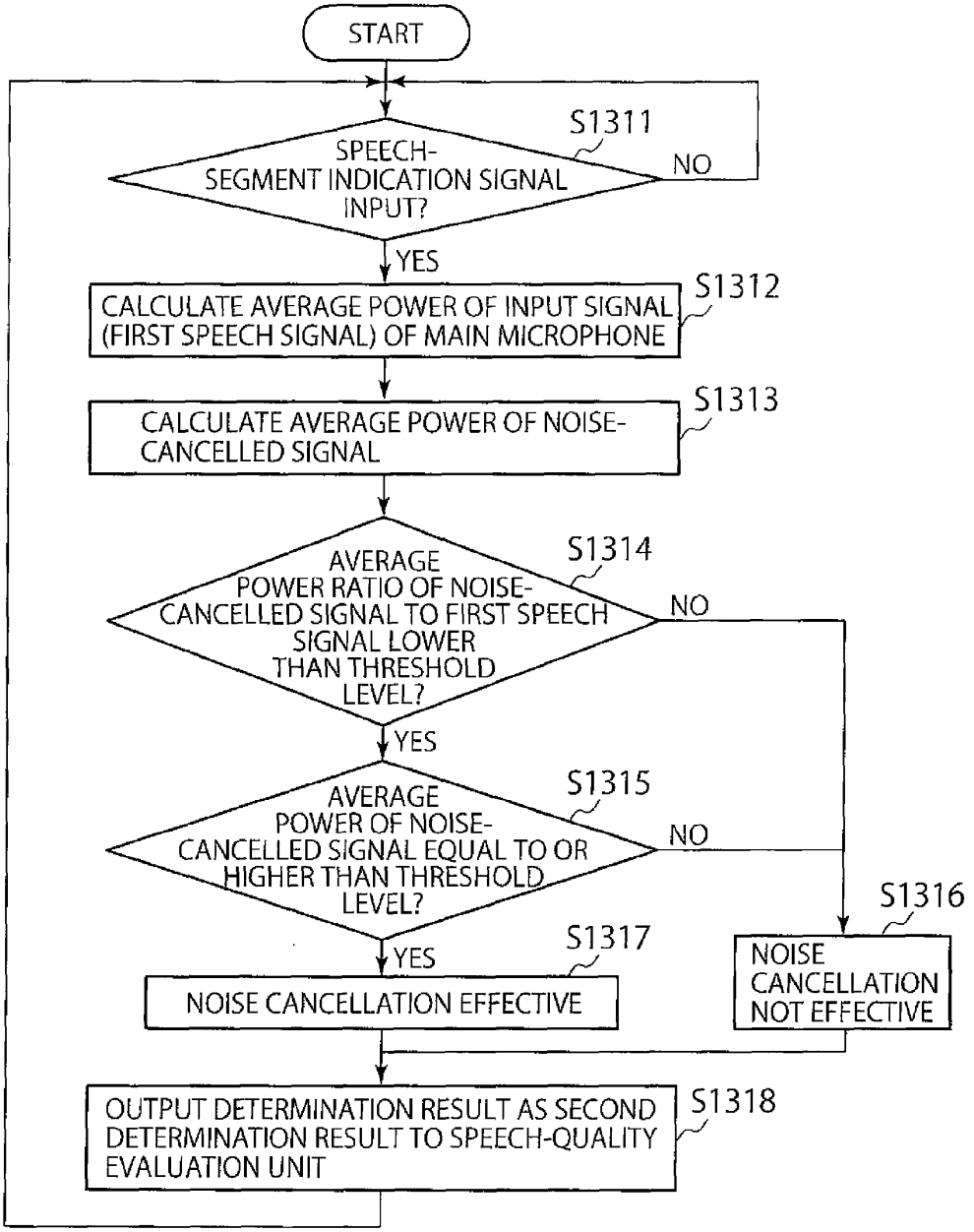
START
S1311
SPEECH-SEGMENT INDICATION SIGNAL INPUT?
NO
YES
S1312
CALCULATE AVERAGE POWER OF INPUT SIGNAL (FIRST SPEECH SIGNAL) OF MAIN MICROPHONE
S1313
CALCULATE AVERAGE POWER OF NOISE-CANCELLED SIGNAL
S1314
AVERAGE POWER RATIO OF NOISE-CANCELLED SIGNAL TO FIRST SPEECH SIGNAL LOWER THAN THRESHOLD LEVEL?
NO
YES
S1315
AVERAGE POWER OF NOISE-CANCELLED SIGNAL EQUAL TO OR HIGHER THAN THRESHOLD LEVEL?
NO
YES
S1316
NOISE CANCELLATION NOT EFFECTIVE
S1317
NOISE CANCELLATION EFFECTIVE
S1318
OUTPUT DETERMINATION RESULT AS SECOND DETERMINATION RESULT TO SPEECH-QUALITY EVALUATION UNIT

FIG. 23

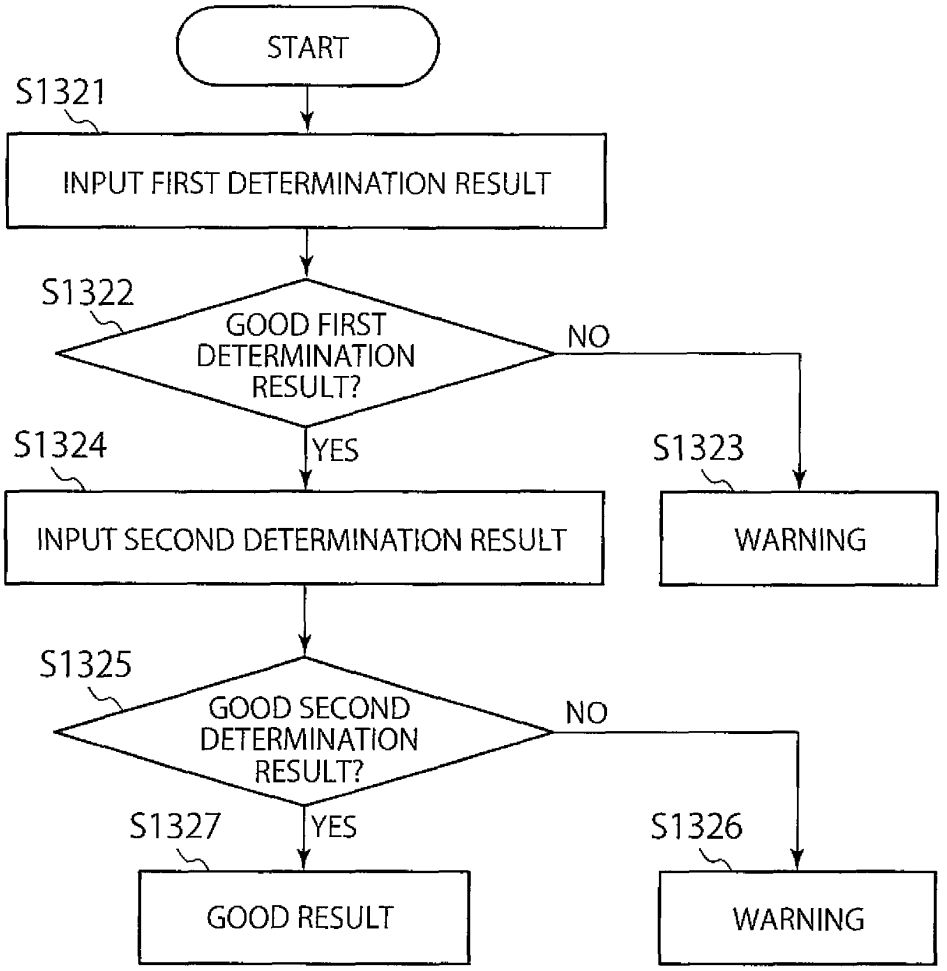
START
S1321
INPUT FIRST DETERMINATION RESULT
S1322
GOOD FIRST DETERMINATION RESULT?
NO
YES
S1324
INPUT SECOND DETERMINATION RESULT
S1323
WARNING
S1325
GOOD SECOND DETERMINATION RESULT?
NO
YES
S1327
GOOD RESULT
S1326
WARNING

FIG. 24

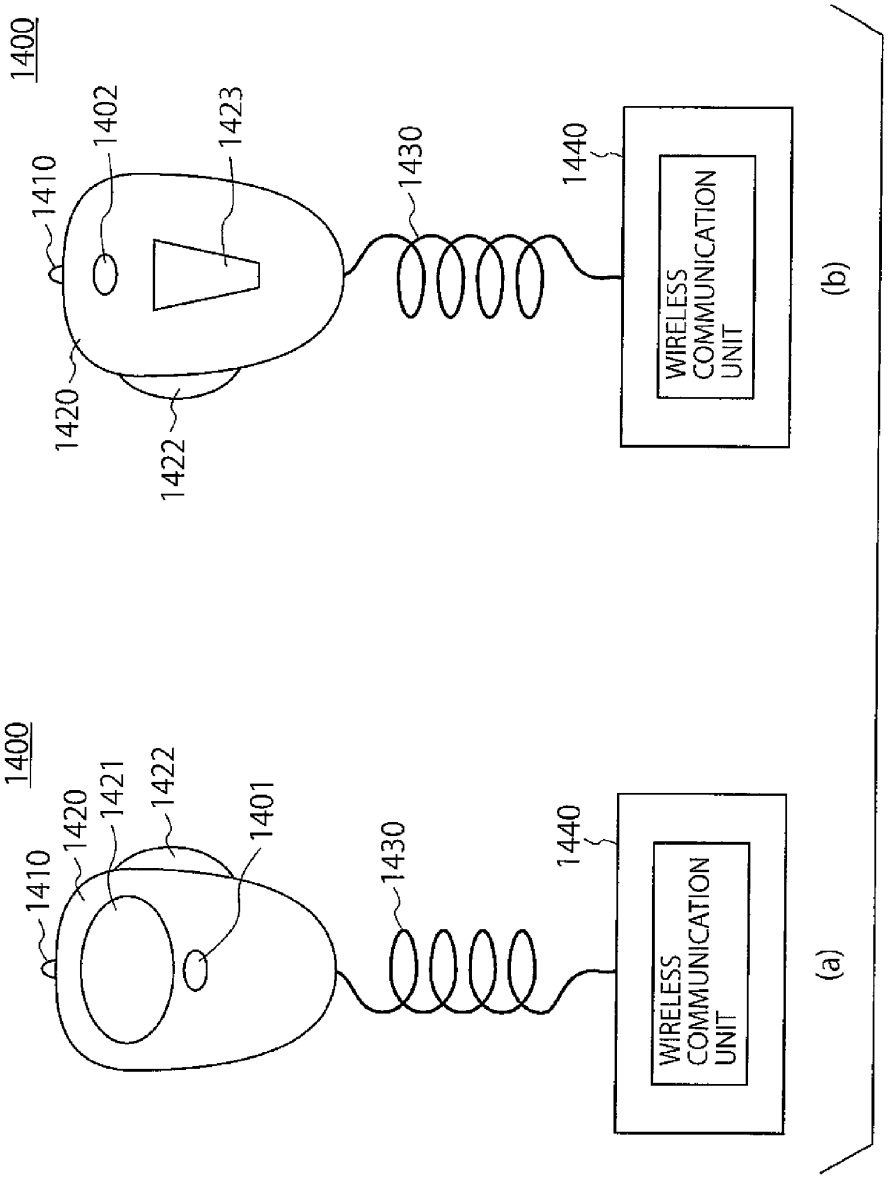
1400
1410
1420
1421
1422
1401
1430
1440
WIRELESS COMMUNICATION UNIT
(a)
1400
1410
1402
1423
1420
1422
1430
1440
WIRELESS COMMUNICATION UNIT
(b)

FIG. 25

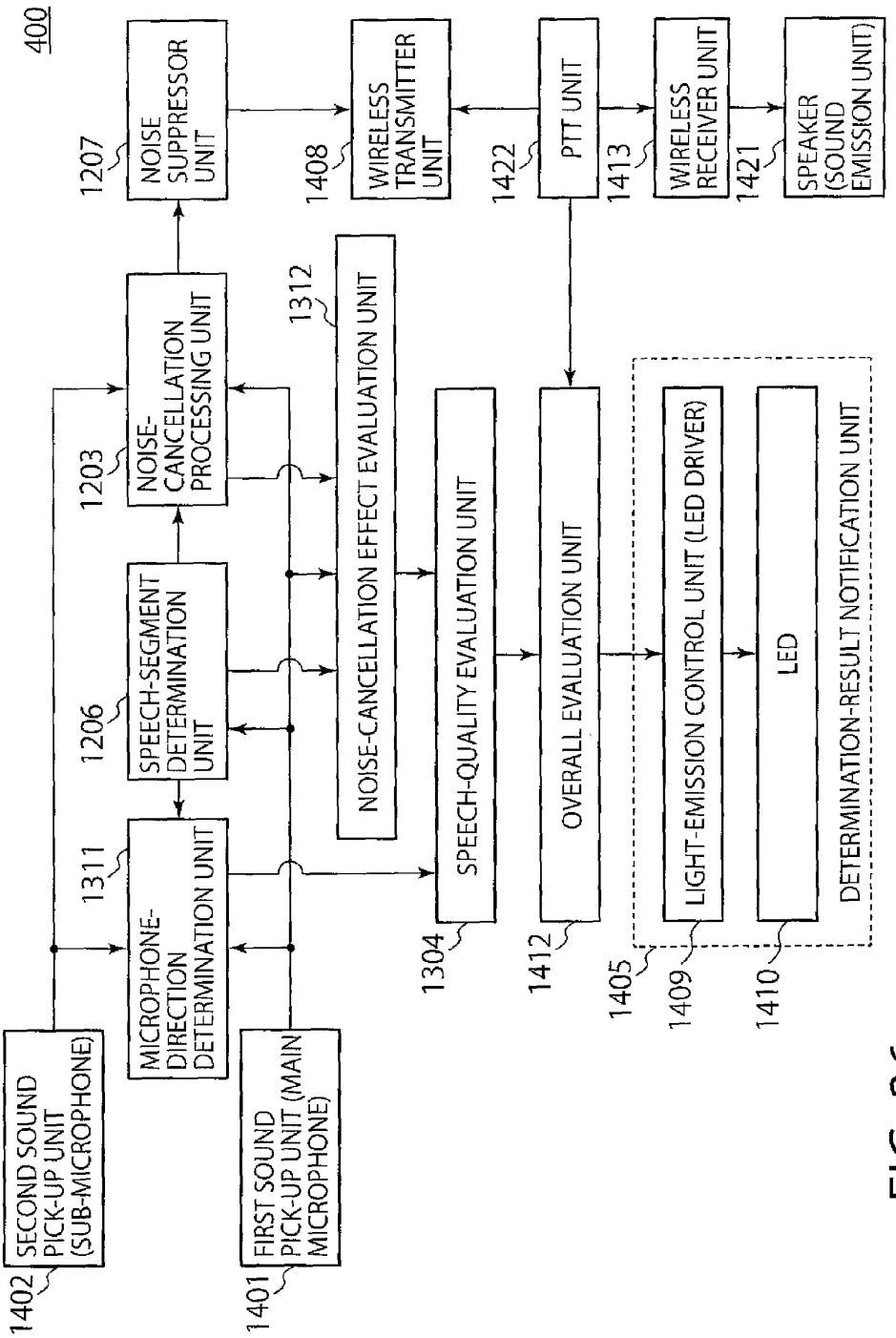
400
1402
SECOND SOUND PICK-UP UNIT (SUB-MICROPHONE)
1401
FIRST SOUND PICK-UP UNIT (MAIN MICROPHONE)
1311
MICROPHONE-DIRECTION DETERMINATION UNIT
1206
SPEECH-SEGMENT DETERMINATION UNIT
1203
NOISE-CANCELLATION PROCESSING UNIT
1207
NOISE SUPPRESSOR UNIT
1312
NOISE-CANCELLATION EFFECT EVALUATION UNIT
1304
SPEECH-QUALITY EVALUATION UNIT
1408
WIRELESS TRANSMITTER UNIT
1412
OVERALL EVALUATION UNIT
1422
PTT UNIT
1405
1409
LIGHT-EMISSION CONTROL UNIT (LED DRIVER)
1410
LED
DETERMINATION-RESULT NOTIFICATION UNIT
1413
WIRELESS RECEIVER UNIT
1421
SPEAKER (SOUND EMISSION UNIT)

FIG. 26

	TRANSMISSION MODE INFROMATION (FROM PTT UNIT)	SPEECH-QUALITY DETERMINATION INFORMATION (FROM SPEECH-QUALITY DETERMINATION UNIT)	LED STATE
No1	TRANSMISSION MODE (PTT UNIT PUSHED)	GOOD SPEECH QUALITY	TURN ON AND OFF
No2		BAD SPEECH QUALITY	TURN ON
No3		NO SIGNAL	TURN ON
No4	STANDBY MODE (PTT UNIT NOT PUSHED)	NO SIGNAL	TURN OFF

FIG. 27

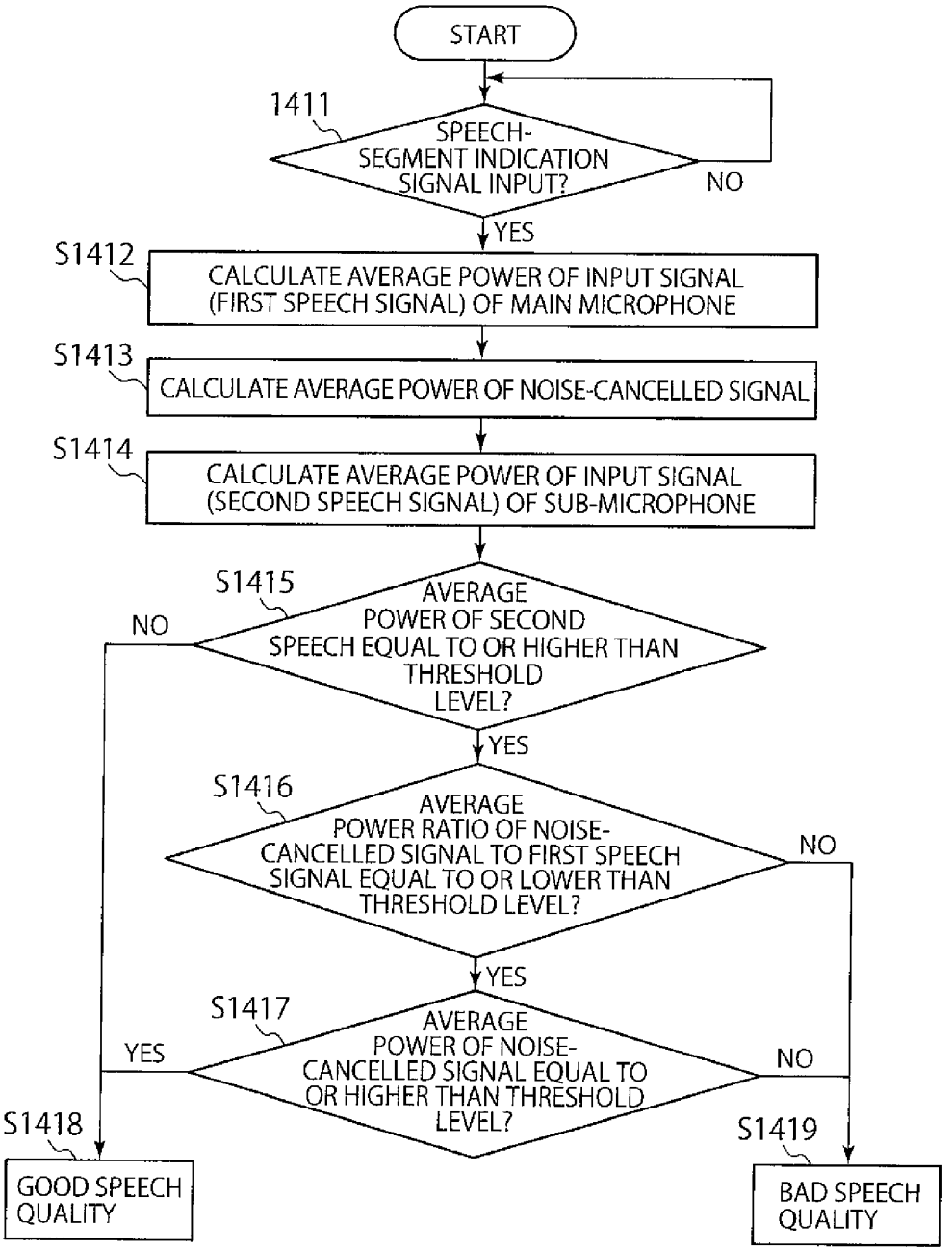
START
1411
SPEECH-SEGMENT INDICATION SIGNAL INPUT?
NO
YES
S1412
CALCULATE AVERAGE POWER OF INPUT SIGNAL (FIRST SPEECH SIGNAL) OF MAIN MICROPHONE
S1413
CALCULATE AVERAGE POWER OF NOISE-CANCELLED SIGNAL
S1414
CALCULATE AVERAGE POWER OF INPUT SIGNAL (SECOND SPEECH SIGNAL) OF SUB-MICROPHONE
S1415
AVERAGE POWER OF SECOND SPEECH EQUAL TO OR HIGHER THAN THRESHOLD LEVEL?
NO
YES
S1416
AVERAGE POWER RATIO OF NOISE-CANCELLED SIGNAL TO FIRST SPEECH SIGNAL EQUAL TO OR LOWER THAN THRESHOLD LEVEL?
NO
YES
S1417
AVERAGE POWER OF NOISE-CANCELLED SIGNAL EQUAL TO OR HIGHER THAN THRESHOLD LEVEL?
YES
NO
S1418
GOOD SPEECH QUALITY
S1419
BAD SPEECH QUALITY

FIG. 28

COMMUNICATION APPARATUS AND CONDITION NOTIFICATION METHOD FOR NOTIFYING A USED CONDITION OF COMMUNICATION APPARATUS BY USING A LIGHT-EMITTING DEVICE ATTACHED TO COMMUNICATION APPARATUS

CROSS-REFERENCE TO RELATED APPLICATIONS

This application is based on and claims the benefit of priority from the prior Japanese Patent Application Nos. 2012-034192 filed on Feb. 20, 2012 and 2012-034189 filed on Feb. 20, 2012, the entire content of which is incorporated herein by reference.

BACKGROUND OF THE INVENTION

The present invention relates to an audio input apparatus, a communication apparatus and a condition notification method.

An audio input apparatus that is a typical example of transceivers for commercial use is often used in an environment of much noise, such as a factory and a construction site. There is thus a demand for communication with clear voice sounds even in such a noisy environment by suppressing noise components included in a speech signal obtained through a microphone.

In order to meet the demand, there is a known audio input apparatus having an active noise-cancellation function using a main microphone for mainly picking up voice sounds and a sub-microphone for mainly picking up the surrounding noise.

In order to enhance the active noise-cancellation function in such a known audio input apparatus, it is preferable that a main microphone is oriented towards the user's mouth with an appropriate distance. In the case of a headset microphone (a close-talking microphone), a comparatively constant positional relationship is kept between the microphone and the user's mouth. On the other hand, in the case of a handset microphone, the positional relationship between a microphone held by a user and the user's mouth changes depending on how the user is using the handset microphone.

Moreover, it may happen that a handset microphone is used in a bad input condition of voice sounds for use in noise cancellation when it is held on the user's shoulder, a user talks into the microphone at a fairly long distance, etc. When a handset microphone is used in such a manner, it may happen that more voice sounds are picked by a sub-microphone than by a main microphone, which cancel a speech signal obtained through the main microphone, with the noise-cancellation function, resulting in transmission of unclear voice sounds.

SUMMARY OF THE INVENTION

A purpose of the present invention is to provide an audio input apparatus, a communication apparatus and a condition notification method that achieve transmission of clear voice sounds with an effective noise-cancellation function.

The present invention provides a condition notification method for notifying a used condition of a simplex communication apparatus by using a light-emitting device attached to the simplex communication apparatus, the method comprising: a communication-mode determination step of determining whether a communication mode of the simplex communication apparatus is a transmission mode or a standby mode; a sound pick-up state determination step of determining a sound pick-up state of a sound carried by a speech signal

to be transmitted if the communication mode is the transmission mode; and a control step of controlling the light-emitting device so that the light-emitting device is turned off, turned on or repeatedly turned on and off based on determination results of the communication-mode determination step and the sound pick-up state determination step.

Moreover, the present invention provides a communication apparatus comprising: a first pick-up unit configured to pick up a voice sound; a transmitter unit configured to transmit the voice sound picked up by the first pick-up unit to outside as a first speech signal; a communication-mode switching unit configured to switch a communication mode between a standby mode in which the transmitter unit does not transmit the speech signal and a transmission mode in which the transmitter unit transmits the speech signal; a sound pick-up state determination unit configured to determine a pick-up state of the voice sound picked up by the first pick-up unit; a light emission device configured to emit light; and a control unit configured to control the light-emitting device so that the light-emitting device is turned off, turned on or repeatedly turned on and off based on the communication mode switched by the communication-mode switching unit, and the pick-up state of the voice sound picked up by the first pick-up unit and determined by the sound pick-up state determination unit.

Furthermore, the present invention provides an audio input apparatus comprising: a first sound pick-up unit; a second sound pick-up unit; a noise-cancellation processing unit configured to perform noise cancellation to a first speech signal input from the first sound pick-up unit by using a second speech signal input from the second sound pick-up unit; a speech-quality evaluation unit configured to evaluate speech quality of a speech signal after the noise cancellation at the noise-cancellation processing unit; and an evaluation-result notification unit configured to notify an evaluation result at the speech-quality evaluation unit.

BRIEF DESCRIPTION OF DRAWINGS

FIG. **1** is a block diagram schematically showing the configuration of a communication apparatus according to a first embodiment of the present invention;

FIG. **2** is a flowchart showing an operation of the communication apparatus according to the first embodiment of the present invention;

FIG. **3** is a view showing the exterior appearance of a communication apparatus (a noise cancellation microphone) with a front view (a) and a rear view (b), according to a second embodiment of the present invention;

FIG. **4** is a block diagram schematically showing the configuration of the communication apparatus according to the second embodiment of the present invention;

FIG. **5** is a flowchart showing a speech-quality evaluation process according to the second embodiment of the present invention;

FIG. **6** is a table listing communication modes, speech-quality evaluation results, and LED states;

FIG. **7** is a block diagram schematically showing the configuration of a communication apparatus according to a third second embodiment of the present invention;

FIG. **8** is a view illustrating a direction-to-phase relationship of a communication apparatus with respect to a user;

FIG. **9** is a flowchart showing a microphone-direction determination process for a main microphone according to the third embodiment of the present invention;

FIG. **10** is a flowchart showing a noise-cancellation effect evaluation process according to the third embodiment of the present invention;

FIG. **11** is a flowchart showing an overall evaluation process concerning the speech quality according to the third embodiment of the present invention;

FIG. **12** is a block diagram schematically showing the configuration of an audio input apparatus (a communication apparatus) according to a fourth embodiment of the present invention;

FIG. **13** is a table listing communication modes, sound pick-up state evaluation results, and LED states under control by a light-emission control unit;

FIG. **14** is a flowchart showing a light-emission control process according to the fourth embodiment of the present invention;

FIG. **15** is a block diagram schematically showing the configuration of an audio input apparatus (a communication apparatus) according to a fifth embodiment of the present invention;

FIG. **16** is a block diagram schematically showing the configuration of an audio input apparatus according to a sixth embodiment of the present invention;

FIG. **17** is a flowchart showing an operation of the audio input apparatus according to the sixth embodiment of the present invention;

FIG. **18** is a block diagram schematically showing the configuration of an audio input apparatus according to a seventh embodiment of the present invention;

FIG. **19** is a flowchart showing a noise-cancellation effect evaluation process according to the seventh embodiment of the present invention;

FIG. **20** is a block diagram schematically showing the configuration of an audio input apparatus according to an eighth embodiment of the present invention;

FIG. **21** is a view illustrating a direction-to-phase relationship of an audio input apparatus with respect to a user;

FIG. **22** is a flowchart showing a microphone-direction determination process for a main microphone according to the eighth embodiment of the present invention;

FIG. **23** is a flowchart showing a noise-cancellation effect evaluation process according to the eighth embodiment of the present invention;

FIG. **24** is a flowchart showing an overall evaluation process concerning the speech quality according to the eighth embodiment of the present invention;

FIG. **25** is a view showing the exterior appearance of a noise cancellation microphone (an audio input apparatus) with a front view (a) and a rear view (b), according to a ninth embodiment of the present invention;

FIG. **26** is a block diagram schematically showing the configuration of the noise cancellation microphone according to the ninth embodiment of the present invention;

FIG. **27** is a table listing communication modes, speech-quality evaluation results, and LED states according to the ninth embodiment of the present invention; and

FIG. **28** is a flowchart showing a speech-quality evaluation process according to the present invention.

DETAILED DESCRIPTION OF PREFERRED EMBODIMENTS

Varies embodiments according the present invention will be explained with reference to the attached drawings. Throughout the drawings, the elements the same as or analogous to each other are given the same reference signs or numerals with no repeated explanation thereof for brevity.

First Embodiment

FIG. **1** is a block diagram schematically showing the configuration of a simplex communication apparatus **100** according to a first embodiment of the present invention.

As shown in FIG. **1**, the communication apparatus **100** is provided with a sound pick-up unit (a main microphone) **101**, a transmitter unit **102**, a speech-quality evaluation unit **103**, a PTT (Push To Talk) unit **104** as a communication-mode switching unit, a light-emission control unit **105**, and a light-emitting device (LED) **106**.

The sound pick-up unit **101** is a microphone attached to the communication apparatus **100**, for picking up a voice sound. On picking up a voice sound, the sound pick-up unit **101** generates a first speech signal that is output to the transmitter unit **102** and the speech-quality evaluation unit **103**.

The transmitter unit **102** performs speech coding to the first speech signal according to need and transmits a second speech signal (the speech-coded first speech signal) to another communication apparatus (not shown). The transmitter unit **102** transmits the second speech signal to another communication apparatus when it receives a transmission-mode signal from the PTT unit **104** while the PTT unit **104** is being pushed as described later.

The speech-quality evaluation unit **103** evaluates the speech quality of the second speech signal to be transmitted by the transmitter unit **102** based on the first speech signal input from the sound pick-up unit **101**. Then, the speech-quality evaluation unit **103** outputs a speech-quality signal that indicates an evaluation result (an evaluated speech quality of the second speech signal) to the light-emission control unit **105**. In the first embodiment, the speech-quality evaluation unit **103** evaluates the speech quality of the second speech signal to be transmitted by the transmitter unit **102** by determining the volume level of a voice sound picked up by the sound pick-up unit **101**. When the volume level of a voice sound picked up by the sound pick-up unit **101** is lower than a specific reference level, it is determined that the voice sound cannot be clearly heard by a person who receives the second speech signal at his or her communication apparatus, hence evaluated as a bad speech quality.

The PIT unit **104** is a communication-mode switching unit to switch the transmission of the second speech signal from the transmitter unit **102**. In detail, the PTT unit **104** switches a communication mode of the communication apparatus **100** between a transmission mode in which the transmitter unit **102** transmits the second speech signal and a standby mode in which the transmitter unit **102** does not transmit the second speech signal. When the PTT unit **104** is pushed, the operation mode, that is the communication mode, of the communication apparatus **100** is switched from the standby mode to the transmission mode for transmission of the second speech signal.

The standby mode is defined as a mode in which the communication apparatus **100** can detect a signal transmitted from another communication apparatus even if no transmitted signal is being received. In other words, the standby mode includes a reception waiting mode and a reception mode in which the communication apparatus **100** is receiving a radio wave. Moreover, the standby mode is defined as a mode in which the communication apparatus **100** performs no operation when the apparatus **100** is only for transmission use with no reception function. Accordingly, the standby mode is defined as these various modes, however, one requirement is that, in the standby mode, the transmitter unit **102** is not transmitting a speech signal. When the communication apparatus **100** is in-vehicle use, it is provided with a speaker.

The PTT unit **104** is, more in detail, a communication-mode switch attached to a main body of the communication apparatus **100**. When a user starts talking, the user pushes the PTT unit **104** to switch the communication mode from the standby mode (a default mode) to the transmission mode.

When the PTT unit **104** is pushed, a transmission-mode signal indicating that the communication mode has been switched from the standby mode to the transmission mode is output to the transmitter unit **102** and the light-emission control unit **105**.

The light-emission control unit **105** controls a light emission state of the light-emitting device **106** to notify a user of a used condition of the communication apparatus **100** (that is, how the communication apparatus **100** is being used). The light-emitting device **106** is attached to the main body of the communication apparatus **100**, that is an LED (Light Emitting Diode) in this embodiment. Based on the speech-quality signal output from the speech-quality quality unit **103**, that indicates the speech quality and the transmission-mode signal output from the PTT unit **104**, that indicates the transmission mode, the light-emission control unit **105** controls the light emission state of the light-emitting device **106**.

The operation of the communication apparatus **100** will be explained with a flowchart shown in FIG. **2**.

The light-emission control unit **105** determines whether the current communication mode is the transmission mode (step S**101**). If the PTT unit **104** is not pushed so that no transmission-mode signal is input, it is determined that the current communication mode is the standby mode (No in step S**101**). Thus, the light-emission control unit **105** turns off the light-emitting device **106** with no drive current supplied thereto (step S**102**). On the other hand, if the PTT unit **104** is pushed so that the transmission-mode signal is input, it is determined that the current communication mode is the transmission mode (Yes in step S**101**), then, the speech-quality evaluation unit **103** performs a speech-quality evaluation process (step S**103**).

Based on an evaluation result indicated by the speech-quality signal from the speech-quality evaluation unit **103**, the light-emission control unit **105** determines whether a speech signal to be transmitted by the transmitter unit **102** has a good speech quality (step S**104**). In other words, it is determined whether the speech-quality signal input from the speech-quality evaluation unit **103** indicates a good speech quality or bad speech quality.

As a result of step S**104**, if the speech quality is good (Yes in step S**104**), the light-emission control unit **105** repeatedly turns on and off the light-emitting device **106** with a drive current supplied thereto (step S**105**). On the other hand, if the speech quality is bad (No in step S**104**), the light-emission control unit **105** turns on the light-emitting device **106** with a drive current supplied thereto (step S**106**).

As described above, based on the communication mode switched by the PTT unit **104** and the speech-quality evaluation result at the speech-quality evaluation unit **103**, the light-emission control unit **105** controls the light-emitting device **106** so that the light-emitting device **106** becomes in one of the three states: a turn-off state, a repeated turn-on-and-off state, and a turn-on state. With the three states of the light-emitting device **106**, a used condition of the communication apparatus **100** is notified to a user. When the user visually recognizes the turn-on state of the light-emitting device **106**, the user recognizes that the current speech quality is bad and takes an action to improve the speech quality, such as, bringing the microphone (the sound pick-up unit) **101** close to his or her mouth.

As described above, according to the first embodiment, in the simplex communication apparatus **100** that performs communication with switching of the communication mode between the transmission mode and the standby mode, it is achieved to notify a user of whether a voice incoming direction, a direction in which the user is talking into the microphone (the sound pick-up unit) **101**, is good or bad and also whether the speech quality of a speech signal to be transmitted is good or bad. The notification can be achieved with the light-emitting device **106** (LED) attached to the main body of the communication apparatus **100**.

In detail, as described above, the communication apparatus **100** in the first embodiment is provided with the PTT unit **104** (the communication-mode switching unit) for switching the communication mode between the standby mode and the transmission mode. When the PTT unit **104** is pushed, the light-emission control unit **105** controls the light-emitting device **106** to become the turn-on state that indicates the transmission mode from the turn-off state that indicates the standby mode. Moreover, based on a speech-quality evaluation result, the light-emission control unit **105** controls the light-emitting device **106** to become the repeated turn-on-and-off state that indicates a good speech quality from the turn-on state that indicates a bad speech quality, thereby notifying a user of a used condition of the communication apparatus **100**. Accordingly, the user can take an action to improve the used condition of the communication apparatus **100** so that the speech quality of his or her voice sound can have a good speech quality when transmitted.

The communication apparatus **100** shown in FIG. **1** may be provided with a receiver unit for receiving a speech signal transmitted from another communication apparatus when the PTT unit **104** is not pushed so that the communication apparatus **100** is in the standby mode. In this case, a speech signal received by the receiver unit is decoded and given off by a speaker.

Second Embodiment

If a transmission apparatus is used in an environment of much noise, it may occur that, even if the volume level of a voice sound picked up a microphone is high enough, the speech quality gets worse because the voice sound is drowned out by the surrounding noise. In this case, it cannot be said that the volume level adequately represents the speech quality. Thus, there is a problem in that, even if the volume level exceeds a threshold level and an LED does not indicate a bad speech quality (if the transmission apparatus is equipped with an LED like the light-emitting device **106** in FIG. **1**), a transmitted voice sound has a bad speech quality due to much noise, resulting in that a person who receives the transmitted voice sound has a difficulty in hearing the voice sound.

Such a problem is remarkable, especially, in digital wireless transmission of a voice sound. When a voice sound is transmitted, it undergoes speech coding in bandwidth compression. However, the speech coding is not performed well due to the surrounding noise, which results in a bad speech quality in the voice sound.

In order to solve such a problem discussed above, a communication apparatus according to a second embodiment has a feature in that the speech quality of a voice sound to be transmitted is notified to a user of the communication apparatus to instruct improvement in a used condition of the communication apparatus, thereby improving speech quality.

FIG. **3** is a view showing the exterior appearance of a communication apparatus **200** (a noise cancellation microphone) with a front view (a) and a rear view (b), according to the second embodiment of the present invention.

The communication apparatus **200** is provided with a noise cancellation microphone unit **220** and a wireless communication unit **240** connected to each other with a cord **230**. The noise cancellation microphone unit **220** in this embodiment corresponds to an audio input apparatus equipped mainly

with microphones. Provided on the front face of the noise cancellation microphone unit **220** are a main microphone **201** (a first sound pick-up unit) and a speaker **212**. Provided on the rear face of the noise-cancellation microphone unit **220** are a sub-microphone **202** (a second sound pick-up unit) and a belt clip **221** for holding the noise-cancellation microphone unit **220** by a belt. Provided at the top and the side faces of the noise-cancellation microphone unit **220** are an LED **210** and a PTT unit **207**, respectively.

The configuration of the communication apparatus **200** will be explained with reference to FIG. **4** that is a block diagram schematically showing the configuration of the communication apparatus according to the second embodiment of the present invention.

The communication apparatus **200** is provided with a main microphone **201** (a first sound pick-up unit), a sub-microphone **202** (a second sound pick-up unit), a speech-segment determination unit **203**, a noise-cancellation processing unit **204**, a noise suppressor unit **205**, a wireless transmitter unit **206**, PTT unit (a communication-mode switching unit) **207**, a speech-quality evaluation unit **208**, an LED control unit **209**, an LED **210**, a wireless receiver unit **211**, and a speaker **212** (a sound emission unit).

The main microphone **201** is a microphone attached to the noise-cancellation microphone unit **220** of the communication apparatus **200**, for picking up a voice sound. A speech signal (a first speech signal) obtained by the main microphone **201** based on the voice sound is output to the speech-segment determination unit **203**, the noise-cancellation processing unit **204**, and the speech-quality evaluation unit **208**. The sub-microphone **202** is also a microphone attached to the noise-cancellation microphone unit **220** of the communication apparatus **200**, for picking up a voice sound. A speech signal (a second speech signal) obtained by the sub-microphone **202** is output to the noise-cancellation processing unit **204** and the speech-quality evaluation unit **208**.

The main microphone **201** corresponds to a first sound pick-up unit for picking up mainly a user's voice sound, hence provided on the front face of the noise-cancellation microphone unit **220** as shown in (a) of FIG. **3**. The sub-microphone **202** corresponds to a second sound pick-up unit for picking up mainly the surrounding noise for use in a noise cancellation process, hence provided on the rear face of the noise-cancellation microphone unit **220** as shown in (b) of FIG. **3**. The arrangements of the main microphone **201** and the sub-microphone **202** on the front and rear faces, respectively, of the cancellation microphone unit **220** as shown in FIG. **3** is the best arrangement for an excellent noise cancellation effect, although the sub-microphone **202** may be provided on the side or bottom face of the noise cancellation microphone unit **220**, or inside the microphone unit **220**.

The speech-segment determination unit **203** performs speech segment determination based on a first speech signal input from the main microphone **201**, to detect a speech segment that corresponds to a duration in which a user is taking into the communication apparatus **200**. In detail, the speech-segment determination unit **203** converts the first speech signal input from the main microphone **201** into a signal component in unit of a specific length in the frequency domain and analyzes a spectrum component of the signal component thus converted into the frequency domain to determine whether it is a vowel, a consonant, or a noise component based on the analyzed spectrum component. The speech-segment determination unit **203** outputs a speech-segment indication signal that indicates a speech segment to the noise-cancellation processing unit **204** and the speech-quality evaluation unit **208**.

The noise-cancellation processing unit **204** performs a noise cancellation process (noise-component suppressing process) based on the first and second speech signals input from the main microphone **201** and the sub-microphone **202**, respectively. In detail, the noise-cancellation processing unit **204** is equipped with an adaptive filter to generate a reversed-phase component of a noise component mixed into a voice component at the main microphone **201**, as a noise cancellation signal, based on a voice sound picked up by the sub-microphone **202**. Then, the noise-cancellation processing unit **204** adds the first speech signal input from the main microphone **201** and the noise cancellation signal to suppress a noise component mixed into a voice component at the main microphone **201**. A speech signal after the noise cancellation is output to the noise suppresser **205** and the speech-quality evaluation unit **208**. In this embodiment, the noise-cancellation processing unit **204** performs the noise cancellation process to the first speech signal input from the main microphone **201** for each frame of a specific constant duration (256 samples, for example). A speech signal that has undergone the noise cancellation process, so that its noise component has been suppressed, is referred to as a noise-cancelled signal, hereinafter.

The noise suppressor unit **205** suppresses a noise component other than a voice component that appears on the frequency axis of the noise-cancelled signal input from the noise-cancellation processing unit **204**. Then, the noise suppressor unit **205** returns a noise-component-suppressed signal into the time domain and outputs the signal to the wireless transmitter unit **206**.

The wireless transmitter unit **206** performs speech coding to the signal from the noise suppressor unit **205** and modulates the signal after the speech coding with a carrier wave and transmits the signal to another wireless communication apparatus or the like.

In the following description, the noise suppressor unit **205** and the wireless transmitter unit **206** are referred to as a communication unit according to need.

The PTT unit **207** switches the operation of the wireless transmitter unit **206** between transmission and non-transmission of the noise-cancelled signal. In detail, the PTT unit **207** switches a communication mode of the communication apparatus **200** between a transmission mode in which the wireless transmitter unit **206** transmits a speech signal and a standby mode in which the wireless transmitter unit **206** is in a waiting mode for the transmission of a speech signal. A reception mode in which the wireless receiver unit **211** receives a speech signal transmitted from another communication apparatus is included in the standby mode mentioned above. When a user wants to receive a signal, the user switches the communication mode to the standby mode using the PTT unit **207**. With the PTT unit **207**, either one of the transmission mode and the standby mode is selected as the communication mode of the communication apparatus **200**. When the user talks into the communication apparatus **200**, the user pushes the PTT unit **207** to switch the communication mode from the standby mode to the transmission mode. Then, a transmission-mode signal indicating that the communication mode has been switched from the standby mode to the transmission mode is output to the wireless transmitter unit **206**, the LED control unit **209**, and the wireless receiver unit **211**.

The speech-quality evaluation unit **208** evaluates the speech quality of the noise-cancelled signal input from the noise-cancellation processing unit **204** that is a speech signal to be transmitted from the wireless transmitter unit **206**. Then,

the speech-quality evaluation unit **208** outputs a speech-quality signal that indicates an evaluation result of speech quality to the LED control unit **209**.

In this embodiment, the speech-quality evaluation unit **208** determines whether the speech quality of a speech signal to be transmitted from the wireless transmitter unit **206** is good or bad according to various factors, such as, a noisy environment or not, noise cancellation at the noise-cancellation processing unit **204** effective or not, and so on.

The speech-quality evaluation unit **208** may determine whether the noise cancellation is effective or not based on the level of attenuation of the first speech signal from the main microphone **201**, that has undergone the noise cancellation process at the noise-cancellation processing unit **204**. In this case, the speech-quality evaluation unit **208** calculates the level of attenuation of the first speech signal from the main microphone **201** after the noise cancellation process and determines that the noise cancellation is effective when the level of attenuation is equal to or higher than a specific threshold level. In detail, the speech-quality evaluation unit **208** compares average power of the first speech signal before the noise cancellation process and average power of a speech signal (noise-cancelled signal) after the noise cancellation process to determine whether the noise cancellation is effective based on a comparison result. This technique is based on the fact that a sound picked up by the main microphone **201** is a mixture of a user's voice sound and the surrounding noise and, if there is a specific level of attenuation or higher, it can be determined that the surrounding noise has been effectively suppressed.

The LED control unit **209** that corresponds to the light-emission control unit **105** in FIG. **1** supplies a drive current to the LED (a light-emitting device) **201** to control its light emission state, based on the transmission-mode signal and the speech-quality signal from the PTT unit **207** and the speech-quality evaluation unit **208**, respectively.

The wireless receiver unit **211** receives a speech signal transmitted from another communication apparatus. While receiving the transmission-mode signal from the PTT unit **207**, the wireless receiver unit **211** does not receive a speech signal because the current communication mode is the transmission mode. The wireless receiver unit **211** decodes a received speech signal and outputs the decoded speech signal to the speaker **212**. The speaker **212** outputs the decoded speech signal as a voice sound.

Explained next is a speech-quality evaluation process performed by the communication apparatus **200** with respect to a flowchart of FIG. **5**.

The speech-segment determination unit **203** performs a speech-segment determination process to determine whether a user is talking into the communication apparatus **200** based on the first speech signal input from the main microphone **201** (step S**201**). If no speech segment is detected (No in step S**201**), the process returns to step S**201** to continue the speech-segment determination process. On the other hand if a speech segment is detected (Yes in step S**201**), the speech-quality evaluation unit **208** performs the following signal-power calculation process (steps S**202** to S**204**).

Firstly, the speech-quality evaluation unit **208** calculates average power per frame of the second speech signal input from the sub-microphone **202** (step S**202**). Then, the speech-quality evaluation unit **208** calculates average power per frame of the first speech signal input from the main microphone **201** before the noise cancellation process (step S**203**). Next, the speech-quality evaluation unit **208** calculates average power per frame of the noise-cancelled signal input from the noise-cancellation processing unit **204** after the noise cancellation process (step S**204**).

Thereafter, the speech-quality evaluation unit **208** determines whether the average power per frame of the second speech signal obtained in step S**202** is equal to or higher than a specific threshold level Pth**1** (step S**205**).

If it is determined that the average power per frame of the second speech signal is not equal to or higher than the threshold level Pth**1** (No step S**205**), it is determined that the speech quality is good (step S**208**). This evaluation is based on a presumption that if the average power per frame of the second speech signal is lower than the threshold level Pth**1**, the communication apparatus **200** is being used in a quiet environment because a sound picked up by the sub-microphone **202** is mainly the surrounding noise. Therefore, it can be determined that the speech quality is good without affected by the surrounding noise.

On the other hand, if it is determined that the average power per frame of the second speech signal is equal to or higher than the threshold level Pth**1** (Yes in step S**205**), the speech-quality evaluation unit **208** compares the average power per frame of the first speech signal before the noise cancellation process obtained in step S**203** and the average power per frame of the noise-cancelled signal after the noise cancellation process obtained in step S**204** (step S**206**).

If it is determined that a power ratio of the noise-cancelled signal to the first speech signal is higher than a specific threshold level Pth**2** (No in step S**206**), it is determined that the speech quality is bad (step S**209**). This evaluation is based on a presumption that if the power ratio is higher than the threshold level Pth**2**, the surrounding noise has a specific power or more and there is no variation in the power before and after the noise cancellation process, and hence the noise cancellation is not effective.

On the other hand, if it is determined that the power ratio of the noise-cancelled signal to the first speech signal is equal to or lower than the threshold level Pth**2** (Yes in step S**206**), the speech-quality evaluation unit **208** determines whether the average power per frame of the noise-cancelled signal after the noise cancellation process is equal to or higher than a specific threshold level Pth**3** (step S**207**).

If it is determined that the average power per frame of the noise-cancelled signal is not equal to or higher than the threshold level Pth**3** (No in step S**207**), it is determined that the speech quality is bad (step S**209**). This evaluation is based on a presumption that if the average power per frame of the noise-cancelled signal is lower than the threshold level Pth**3**, a user's voice sound is also affected by the noise cancellation process, so that the speech quality is bad and hence it is difficult for the user's voice sound to be clearly heard at another communication apparatus when the voice sound is transmitted thereto.

On the other hand, if it is determined that the average power per frame of the noise-cancelled signal is equal to or higher than the threshold level Pth**3** (Yes in step S**207**), it is determined that a preferable sound level is maintained and hence the speech quality is good (step S**208**).

The good evaluation result in step S**208** or the bad evaluation result in step S**209** is output to the LED control unit **209**, as the speech-quality signal indicating the speech quality.

In the same manner as shown in FIG. **2** in first embodiment, the LED control unit **209** determines whether the current communication mode is the transmission mode based on the transmission-mode signal from the PTT unit **207**. Moreover, in the same manner as shown in FIG. **2**, the light-emission control unit **105** determines whether a speech signal to be transmitted by the transmitter unit **102** has a good speech

quality based on an evaluation result indicated by the speech-quality signal from the speech-quality evaluation unit **103**.

Based on a table shown in FIG. **6** that lists communication modes, speech-quality evaluation results, and LED states, the LED control unit **209** controls LED **210**, as follows.

When the PTT unit **207** is pushed so that the communication mode is the transmission mode and the speech quality is evaluated as good, the LED control unit **209** supplies a drive current to the LED **210** to put the LED **210** in a repeated turn-on-and-off state that indicates a normal transmission mode with a good speech quality.

On the other hand, when the PTT unit **207** is pushed so that the communication mode is the transmission mode and the speech quality is evaluated as bad, the LED control unit **209** supplies a drive current to the LED **210** to put the LED **210** in a turn-on state that indicates the necessity of improvement in speech quality. Moreover, when the PTT unit **207** is pushed so that the communication mode is the transmission mode, however, no speech-quality signal is input, the LED control unit **209** supplies a drive current to the LED **210** to put the LED **210** in a turn-on state that indicates the transmission mode. There is a case in which the speech-segment determination unit **203** does not detect a speech segment if no speech-quality signal is input. In this case, the speech-quality evaluation process shown in FIG. **5** does not start so that the speech-quality evaluation unit **208** does not output a speech-quality signal to the LED control unit **209**. When the PTT unit **207** is pushed to output the transmission mode, however, no speech-quality signal is input, the LED control unit **209** supplies a drive current to the LED **210** to put the LED **210** in a turn-on state that indicates that although the communication mode is the transmission mode, a user is not talking into the communication apparatus **200** which is a duration of a non-speech segment.

As described above, in this embodiment, the emission state of the LED **210** during a non-speech segment in the transmission mode and the emission state of the LED **210** during a speech segment with a bad speech quality in the transmission mode are controlled in the same manner, that is, the LED **210** is put in a turn-on state in both cases. This LED control technique makes a user visually recognize that his or her voice sound is not appropriately input to the communication apparatus **200**.

When a user visually recognizes that the emission state of the LED **210** is not switched from the turn-on state to the repeated turn-on-and-off state although the user is talking into the communication apparatus **200**, the user recognizes that the communication apparatus **200** is not used appropriately. Then, the user tries to change the turn-on state of the LED **210** to the repeated turn-on-and-off state by changing the way of holding the main microphone **201**, the direction in which the user is talking into the main microphone **201**, the distance between the user's mouth to the main microphone **201**, etc. Accordingly, with the change in emission state of the LED **210**, the user can be instructed to improve the use of the communication apparatus **200**, thereby improving the speech quality of a speech signal to be transmitted to another communication apparatus.

On the other hand, when the PTT unit **207** is not pushed, so that the communication mode is not the transmission mode but the standby mode, the LED control unit **209** supplies no drive current to the LED **210** so that the LED **210** remains in the turn-off state.

As described above, the communication apparatus according to the second embodiment is provided with the two microphones and has the noise cancellation function to a speech signal to be transmitted so that a user's voice sound is not drown out by the surrounding noise, thereby achieving transmission of a clear sound to another communication apparatus even if the level of the surrounding noise is high.

Nevertheless, even if a communication apparatus is equipped with a noise cancellation function, it could happen that the noise cancellation function does not work effectively so that it causes a bad speech quality to a speech signal to be transmitted to another communication apparatus. Especially, in the case of a simplex communication apparatus that cannot perform transmission and reception at the same time, no information of a bad speech quality can be sent from another communication apparatus while a user is talking into the simplex communication apparatus. It could therefore happen that the user is continuously talking into the simplex communication apparatus without recognizing a bad speech quality.

In order to solve such a problem discussed above, in the communication apparatus **200** according to the second embodiment, the speech quality to be felt by a person who receives a voice sound transmitted from the communication apparatus **200** is assumed based on the determination of whether the noise cancellation function is working effectively with the combination of determination on the average power of speech signals from the main microphone and the sub-microphone, and the power ratio of the noise-cancelled signal to the speech signal from the main microphone. Then, if it is determined that the speech quality requires improvement, the LED **210** can be used effectively to notify a user of the necessity of improvement in speech quality.

Third Embodiment

The communication apparatus **200** according to the second embodiment performs the speech quality evaluation depending on whether the noise cancellation function is working effectively. With this technique, it is possible to perform more reliable speech quality evaluation than speech quality evaluation based on the main-microphone volume level.

However, there are cases in which the communication apparatus **200** according to the second embodiment erroneously determines that the noise cancellation function is working effectively even if it is not working effectively. One case is that the main microphone **201** of the noise cancellation microphone unit **220** (FIG. **3**) of the communication apparatus **200** is not positioned in front of a user. In this case, it could happen that the voice component of a user's voice sound is picked up at a higher level by the sub-microphone **202** provided on the rear face of the noise-cancellation microphone unit **202** as shown in (b) of FIG. **3**, in addition to the main microphone **201**. The noise-cancellation processing unit **204** (FIG. **4**) performs the noise cancellation process by using a signal from the sub-microphone **202** as a reference signal. Thus, in the above case, it could happen that a voice component picked up by the sub-microphone **202** is erroneously determined as a noise component, so that a voice component which should remain is inevitably eliminated from a speech signal output from the main microphone **201**.

Moreover, in the above case, if there is an intense noise source in front of a user, instead of the noise-cancellation microphone unit **220** as shown in (a) of FIG. **3**, a noise component from the noise source is picked by the main microphone **201**, and hence the level of signal power of a noise-cancelled signal output from the noise-cancellation processing unit **204** may exceed a threshold level. Thus, it could happen that through the evaluations in steps S**205** to S**207**, it is erroneously determined that the speech quality is good, as a final result.

In order to solve such a problem discussed above, the present invention provides a communication apparatus as a third embodiment that evaluates the speech quality reliably and notifies an evaluation result to a user, even in the cases discussed above.

FIG. **7** is a block diagram schematically showing the configuration of a communication apparatus **300** according to the third second embodiment of the present invention.

As shown in FIG. **7**, the communication apparatus **300** is provided with a speech-segment determination unit **303**, a microphone-direction determination unit **313**, and a speech-quality evaluation unit **308** that is equipped with a noise-cancellation effect evaluation unit **314** and an overall evaluation unit **315**, in addition to the units **201**, **202**, **204**, **205**, **206**, **207**, **209**, **210**, **211**, and **212** that correspond to those shown in FIG. **4**, respectively. The communication apparatus **300** has the same exterior appearance as the communication apparatus **200** as shown in FIG. **3**.

The speech-segment determination unit **303** determines whether or not a first speech signal input from the main microphone **201** is a speech segment of a user's voice sound by way of spectrum analysis with conversion of the first speech signal into a signal component in unit of a specific length in the frequency domain. The speech-segment determination unit **303** outputs a result of speech segment determination to the noise-cancellation processing unit **204**, the microphone-direction determination unit **313**, and the noise-cancellation effect evaluation unit **314**.

While the speech-segment determination unit **303** is determining that the first speech signal input from the main microphone **201** is a speech segment, the microphone-direction determination unit **313** detects a phase difference between the first speech signal output from the main microphone **201** and a second speech signal output from the sub-microphone **202**. Then, the microphone-direction determination unit **313** detects a direction of the main microphone **201** (a main-microphone direction, hereinafter) with respect to a user based on the phase difference. Then, the microphone-direction determination unit **313** outputs a determination result on the main-microphone direction to the overall evaluation unit **315**, as a first evaluation result.

FIG. **8** is a view illustrating a direction-to-phase relationship of the communication apparatus **300** with respect to a user, or a phase difference between voice sounds depending on the main-microphone direction.

As shown in (a) of FIG. **8**, when a user faces the communication apparatus **300** at the front side with the main microphone **201** attached thereto, in a normal used condition, there is a large phase difference between a voice sound that is picked up by the main microphone **201** through a straight path and a voice sound that is picked up by the sub-microphone **202** through a roundabout path. On the other hand, as shown in (b) of FIG. **8**, when the communication apparatus **300** is inclined toward a user, there is a small phase difference between voice sounds picked up by the main microphone **201** and the sub-microphone **202** due to a shorter distance between the user's mouth and the two microphones. In particular, when the main microphone **201** attached to the communication apparatus **300** at the front side is inclined toward a user at 90 degrees, the distances from the user's mouth to the main microphone **201** and to the sub-microphones **202** are almost equal to each other, so that the phase difference is almost zero.

Under consideration of the change in phase difference depending on the positional relationship between a user and the communication apparatus **300** discussed above, the microphone-direction determination unit **313** compares a phase difference detected between the first and second speech signals output from the main microphone **201** and the sub-microphone **202**, respectively, with a specific threshold value. When the phase difference is smaller than the specific threshold value, the microphone-direction determination unit **313** assumes that the main-microphone direction is not toward a user, such as shown in (b) of FIG. **8** and determines that the user is not using the communication apparatus **300** appropriately. On the other hand, when the phase difference is equal to or larger than the specific threshold value, the microphone-direction determination unit **313** assumes that the main-microphone direction is toward a user, such as shown in (a) of FIG. **8**, and determines that the user is using the communication apparatus **300** appropriately.

The noise-cancellation effect evaluation unit **314** determines whether the noise cancellation function of the noise-cancellation processing unit **204** is working effectively and outputs an evaluation result to the overall evaluation unit **315**, as a second evaluation result.

The overall evaluation unit **315** performs overall evaluation of: the average power of the second speech signal from the sub-microphone **202** in the same manner as the speech-quality evaluation unit **208** described with respect to FIG. **5**; the first evaluation result from the microphone-direction determination unit **313**; and the second evaluation result from the noise-cancellation effect evaluation unit **314**, to determine the speech quality of a speech signal to be transmitted from the wireless transmitter unit **206**. The speech quality of a voice sound comprehensively determined by the overall evaluation unit **315** is output to the LED control unit **209**, as a speech-quality signal, for emission control of the LED **210**.

Explained next is a microphone-direction determination process performed by the microphone-direction determination unit **313**, with respect to a flowchart of FIG. **9**.

The microphone-direction determination unit **313** compares the phases of first and second speech signals input from the main microphone **201** and the sub-microphone **202**, respectively, to detect a phase difference therebetween (step S**301**). Then, the microphone-direction determination unit **313** compares the phase difference between the first and second speech signals with a specific threshold value to determine whether the phase difference is equal to or larger than the specific threshold value (step S**302**). The comparison of phase difference is done based on the fact that the change in orientation of the main microphone **201** directly reflected in the phase difference as discussed with reference to FIG. **8**.

If the phase difference is equal to or larger than the specific threshold value (Yes in step S**302**), the microphone-direction determination unit **313** assumes that the positional relationship between the main microphone **201** and the user's mouth is good, such as shown in (a) of FIG. **8**, and determines that the user is using the communication apparatus **300** appropriately. On the other hand, if the phase difference is smaller than the specific threshold value (No in step S**302**), the microphone-direction determination unit **313** assumes that the positional relationship between the main microphone **201** and the user's mouth is bad, such as shown in (b) of FIG. **8**, and determines that the user is using the communication apparatus **300** inappropriately.

Then, the microphone-direction determination unit **313** outputs a determination result obtained in step S**303** or S**304** to the overall evaluation unit **315** of the speech-quality evaluation unit **308**, as a first determination result that indicates whether or not the main-microphone direction is appropriate, that is, whether or not the communication apparatus **300** is used appropriately.

Explained next is a noise-cancellation effect evaluation process performed by the noise-cancellation effect evaluation unit **314**, with respect to a flowchart of FIG. **10**.

The noise-cancellation effect evaluation unit **314** is in a waiting mode to receive a speech-segment indication signal that is generated by the speech-segment determination unit **303** when it determines that a first speech signal input from the main microphone **201** is a speech segment (step S**311**). When the speech-segment indication signal is input (Yes in step S**311**), the noise-cancellation effect evaluation unit **314** performs step S**312**, whereas if not (No in step S**311**), it is still in the waiting mode to receive the speech-segment indication signal.

In step S**312**, the noise-cancellation effect evaluation unit **314** calculates average power of a first speech signal from the main microphone **201** for one frame before the noise-cancellation processing unit **204** performs the noise cancellation process per one frame (step S**312**). Next, the noise-cancellation effect evaluation unit **314** calculates average power of a noise-cancelled signal from the noise-cancellation processing unit **204** (step S**313**).

Thereafter, the noise-cancellation effect evaluation unit **314** compares the average power of the first speech signal before the noise cancellation process and the average power of the noise-cancelled signal after the noise cancellation process to determine whether an average power ratio of the noise-cancelled signal to the first speech signal is equal to or lower than a threshold level Pth**2** (step S**314**).

If the average power ratio is higher than the threshold level Pth**2** (No in step S**314**), the noise-cancellation effect evaluation unit **314** determines that the noise cancellation function is not working effectively (step S**317**). On the other hand, if the average power ratio is equal to or lower than the threshold level Pth**2** (Yes in step S**314**), the noise-cancellation effect evaluation unit **314** determines whether the average power of the noise-cancelled signal is equal to or higher than a threshold level Pth**3** (step S**315**).

If the average power of the noise-cancelled signal is lower than the threshold level Pth**3** (No in step S**315**), the noise-cancellation effect evaluation unit **314** determines that the noise cancellation function is not working effectively (step S**317**). On the other hand, if the average power of the noise-cancelled signal is equal to or higher than the threshold level Pth**3** (Yes in step S**315**), the noise-cancellation effect evaluation unit **314** determines that the noise cancellation function is working effectively (step S**316**).

Then, the noise-cancellation effect evaluation unit **314** outputs an evaluation result in step S**316** or S**317** to the overall evaluation unit **315**, as a second determination result (step S**318**).

As described above, the noise-cancellation effect evaluation unit **314** determines whether or not the noise cancellation function is working effectively by using the signals before and after the noise cancellation process performed by the noise-cancellation processing unit **204**. In this embodiment, if it is determined that the noise cancellation function is working effectively, it means that a surrounding-noise component is effectively eliminated from a speech signal that is a mixture of a voice component and the surrounding-noise component so that much of the voice component remains in the speech signal.

Therefore, when a surrounding-noise component is effectively eliminated from a speech signal by the noise cancellation process, signal power Pnc of a speech signal after the noise cancellation process is lower than signal power Pic of a speech signal before the noise cancellation process by the degree of signal power of a surrounding-noise component. Accordingly, the determination of whether or not the noise cancellation function is working effectively is made by comparing the signal power Pic and Pnc before and after the noise cancellation process, as explained below.

There are two ways for the noise-cancellation effect evaluation unit **314** to determine whether or not the noise cancellation function is working effectively.

One way is to determine whether the signal power Pin and Pnc meet either the following relational expression (1-a) or (1-b):

$$(Pnc/Pin)<Pth2 \quad (1\text{-a})$$

$$(Pnc-Pin)>Pth2'(Pth2'\neq Pth2) \quad (1\text{-b})$$

Another way is, after the evaluation with the relational expression (1-a) or (1-b) is performed, to determine whether the signal power Pnc meets the following relational expression (2):

$$Pnc>Pth3 \quad (2)$$

With the relational expression (2), it can be determined whether a voice component that has to remain in a speech signal has been eliminated from the speech signal, in addition to a surrounding-noise component.

Explained next is an overall evaluation process performed by the overall evaluation unit **315**, with respect a flowchart of FIG. **11**.

The overall evaluation unit **315** calculates average power per frame of the second speech signal input from the sub-microphone **202** (step S**321**). Then, the overall evaluation unit **315** determines whether the average power per frame of the second speech signal is equal to or higher than a specific threshold level Pth**1** (step S**322**).

If it is determined that the average power per frame of the second speech signal is not equal to or higher than the threshold level Pth**1** (No step S**322**), it is determined that the speech quality is good (step S**327**). This evaluation is based on a presumption that if the average power per frame of the second speech signal is lower than the threshold level Pth**1**, the communication apparatus **300** is being used in a quiet environment because a sound picked up by the sub-microphone **202** is mainly the surrounding noise. Therefore, it can be determined that the speech quality is good without affected by the surrounding noise.

On the other hand, if it is determined that the average power per frame of the second speech signal is equal to or higher than the threshold level Pth**1** (Yes in step S**322**), the overall evaluation unit **315** receives the first determination result from the microphone-direction determination unit **313** (step S**323**). Then, the overall evaluation unit **315** determines whether the first evaluation result shows a good result (step S**324**). If the first evaluation result shows a bad result (No step S**324**) that indicates a bad positional relationship between the main microphone **201** and the user's mouth as discussed with respect to (b) of FIG. **8**, the overall evaluation unit **315** determines that the speech quality is bad (step S**328**). On the other hand, if the first evaluation result shows a good result (Yes in step S**324**), the overall evaluation unit **315** receives the second evaluation result from the noise-cancellation effect evaluation unit **314** (step S**325**).

Then, the overall evaluation unit **315** determines whether the second evaluation result shows a good result (step S**326**). If the second evaluation result shows a bad result (No in step S**326**) that indicates that the noise cancellation function is not working effectively, the overall evaluation unit **315** determines that the speech quality is bad (step S**328**). On the other hand, if the second evaluation result shows a good result (Yes

in step S**326**), that is, the noise cancellation function is working effectively, the overall evaluation unit **315** determines that the speech quality is good (step S**327**). Then, the overall evaluation unit **315** outputs a speech-quality signal that carries information on the result in step S**327** or S**328** to the LED control unit **209** (step S**329**).

The noise-cancellation effect evaluation unit **314** may perform the noise-cancellation effect evaluation process only when the noise cancellation process is performed or should be performed. For example, the noise-cancellation effect evaluation unit **314** may perform the noise-cancellation effect evaluation process when the second speech signal from the sub-microphone **202** has power equal to or higher than a specific level or a flag is set to indicate that the noise cancellation process is being performed. The noise-cancellation processing unit **204** may perform the noise cancellation process when the second speech signal has power equal to or higher than a specific level. The noise-cancellation processing unit **204** may also perform the noise cancellation process depending on a voice incoming direction of a voice sound based on the phase difference between the first and second speech signals.

Explained next is an operation of the LED control unit **209** with respect the flowchart shown in FIG. **2** because the operation of the LED control unit **209** of the third embodiment is similar to that of the light-emission control unit **105** of the first embodiment.

The LED control unit **209** checks the current communication mode at a specific interval of, for example, 1/30 seconds, to determine whether the communication mode has been switched to the transmission mode through the PTT unit **207** pushed by a user (step S**101**). If the PTT unit **207** has not been pushed so that the current communication mode has been set to the standby mode (No in step S**101**), the LED control unit **209** turns off the light-emitting device **106** with no a drive current supplied thereto (step S**102**). On the other hand, if the PTT unit **207** has been pushed so that the current communication mode has been set to the transmission mode (Yes in step S**101**), the LED control unit **209** receives the speech-quality signal from the overall evaluation unit **315** (step S**103**) to check the speech quality indicated by the speech-quality signal (step S**104**). If the speech quality is good (Yes in step S**104**), the LED control unit **209** repeatedly turns on and off the LED **210** with a drive current supplied thereto (step S**105**). On the other hand, if the speech quality is bad (No in step S**104**), the light-emission control unit **105** turn on the light-emitting device **106** with a drive current supplied thereto (step S**106**).

As described above, in the communication apparatus **300** according to the third embodiment, an LED emission state is controlled with overall evaluation of the noise cancellation effect and the main-microphone direction, to effectively notify a user of the speech quality.

Fourth Embodiment

FIG. **12** is a block diagram schematically showing the configuration of an audio input apparatus **1000** according to a fourth embodiment of the present invention.

The audio input apparatus **1000** is provided with a sound pick-up unit **1001**, a transmitter unit **1002**, a sound pick-up state evaluation unit **1003**, a transmission instruction unit **1004**, a light-emission control unit **1005**, and a light emission unit **1006**. The units **1001**, **1002**, **1005**, and **1006** correspond to the units **101**, **102**, **105**, and **107** shown in FIG. **1**, respectively.

The sound pick-up unit **1001** picks up a voice sound and generates a speech signal that is output to the transmitter unit **102** and the sound pick-up state evaluation unit **1003**. The transmitter unit **102** transmits the speech signal to another communication apparatus while it is receiving a transmission instruction signal from the transmission instruction unit **1004**.

The sound pick-up state evaluation unit **1003** evaluates a sound pick-up state of a speech signal to be transmitted from the transmitter unit **1002** based on the speech signal input from the sound pick-up unit **1001**. The sound pick-up state to be evaluated by the sound pick-up state evaluation unit **1003** is a feature of the speech signal to be transmitted from the transmitter unit **1002**, based the result of determination of a speech segment and evaluation of speech quality. The sound pick-up state evaluation unit **1003** outputs sound pick-up state information that indicates an evaluation result of the sound pick-up state to the light-emission control unit **1005**.

The transmission instruction unit **1004** instructs the transmitter unit **1002** to transmit a speech signal. The transmission instruction unit **1004** is connected to a PTT switch. When the PTT switch is pushed, the transmission instruction unit **1004** outputs a transmission instruction signal to the transmitter unit **1002** and the light-emission control unit **1005**. When the transmission instruction unit **1004** outputs the transmission instruction signal to the transmitter unit **1002**, the communication mode of the audio input apparatus **1000** is switched from the standby mode in which the transmitter unit **1002** does not transmit a speech signal to the transmission mode in which the transmitter unit **1002** transmits a speech signal.

The light-emission control unit **1005** controls the emission state of the light emission unit **1006** to notify a user of how the audio input apparatus **1000** is being used concerning the positional relationship between the user and microphones as discussed with respect to FIG. **8**. The light emission unit **1006** in this embodiment is an LED attached to the main frame of the audio input apparatus **1000**. The light-emission control unit **1005** controls the emission state of the LED (light emission unit) **1006** based on the transmission instruction signal from the transmission instruction unit **1004** and the sound pick-up state information from the sound pick-up state evaluation unit **1003**. In detail, the light-emission control unit **1005** turns on the LED **1006** if the transmission instruction signal is input, a speech segment is detected, and the speech quality is lower than a specific threshold level. Moreover, the light-emission control unit **1005** repeatedly turns on and off the LED **1006** if the transmission instruction signal is input, a speech segment is detected, and the speech quality is equal to or higher the specific threshold level. However, the light-emission control unit **1005** turns off the LED **1006** if no transmission instruction signal is input.

As described above, the audio input apparatus **1100** is provided with the sound pick-up unit **1001** for picking up a voice sound to generate a speech signal, the transmitter unit **1002** for transmitting the speech signal, the transmission instruction unit **1004** for instructing the transmitter unit **1002** to transmit the speech signal, the sound pick-up state evaluation unit **1003** for evaluating a sound pick-up state of the speech signal to be transmitted by the transmitter unit **1002**, and the light-emission control unit **1005** for controlling the emission state of the light emission unit **1006**. In this embodiment, the light emission unit **1006** is an LED, so that the light-emission control unit **1005** controls the emission state of the LED **1006**, among the turn-on state, the turn-off state, and the repeated turn-on-and-off state, based on the sound pick-up state evaluated by the sound pick-up state evaluation unit **1003**.

The sound pick-up state evaluation unit **1003** may be equipped with a volume-level measuring device for measuring the volume level of a speech signal input from the sound pick-up unit **1001**, as a sound pick-up state of a speech signal to be transmitted from the transmitter unit **1002** to be evaluated. In this case, the light-emission control unit **1005** controls the emission state of the LED **1006** in the following three ways. While the transmission instruction unit **1004** is not instructing the transmitter unit **1002** to transmit a speech signal, the light-emission control unit **1005** turns off the LED **1006**. While the transmission instruction unit **1004** is instructing the transmitter unit **1002** to transmit a speech signal, however, the volume level of this speech signal is lower than a specific reference level, the light-emission control unit **1005** turns on the LED **1006**. Moreover, while the transmission instruction unit **1004** is instructing the transmitter unit **1002** to transmit a speech signal and the volume level of this speech signal is equal to or higher than the reference level, the light-emission control unit **1005** repeatedly turns on and off the LED **1006**.

Control of the emission state of the LED **1006** by the light-emission control unit **1005** will be described in detail.

For the emission-state control, the sound pick-up state evaluation unit **1003** has a speech-segment determination function and a speech-quality evaluation function, like the speech-segment determination unit **203** and the speech-quality evaluation unit **208**, respectively, shown in FIG. **4**, for evaluating a sound pick-up state of the speech signal to be transmitted by the transmitter unit **1002**. In detail, for sound pick-up state evaluation, the sound pick-up state evaluation unit **1003** determines whether a signal input from the sound pick-up unit **1001** is a speech segment. Moreover, for sound pick-up state evaluation, the sound pick-up state evaluation unit **1003** evaluates the speech quality of a speech segment to be transmitted from the transmitter unit **1002**. The results of speech-segment determination and speech-quality evaluation are output to the light-emission control unit **1005**, as speech-segment information and speech-quality information, respectively, which are expressed as sound pick-up state information in FIG. **12**.

FIG. **13** is a table listing communication modes, sound pick-up state evaluation results, and LED states under control by the light-emission control unit **1005**. FIG. **14** is a flowchart showing a light-emission control process to be performed by the light-emission control unit **1005**. The light-emission control process will be described with reference to FIGS. **13** and **14**.

The light-emission control unit **1005** determines per frame whether a transmission instruction signal is input from the transmission instruction unit **1004** (step S**1001**). If no transmission instruction signal is input (No in step S**1001**), the light-emission control unit **1005** determines that the PTT switch connected to the transmission instruction unit **1004** is not pushed so that the transmission instruction unit **1004** does not output a transmission instruction signal, hence the audio input apparatus **1000** is in the standby mode. Then, the light-emission control unit **1005** turns off the LED **1006** as shown in No. **1** of FIG. **13** (step S**1002**).

On the other hand, if a transmission instruction signal is input (Yes in step S**1001**), the light-emission control unit **1005** determines whether the speech segment information input from the sound pick-up state evaluation unit **1003** indicates a speech segment (step S**1003**). If the speech segment information does not indicate a speech segment (No in step S**1003**), the light-emission control unit **1005** determines that the PTT switch is being pushed so that the transmission instruction unit **1004** outputs a transmission instruction signal, hence the audio input apparatus **1000** is in the transmission mode, however, a user is not talking into the audio input apparatus **1000**. Then, the light-emission control unit **1005** turns on the LED **1006** as shown in No. **2** of FIG. **13** (step S**1004**).

On the other hand, if the speech segment information indicates a speech segment (Yes in step S**1003**), the light-emission control unit **1005** determines whether the speech quality information input from the sound pick-up state evaluation unit **1003** indicates a good speech quality (step S**1005**). If the speech quality is not good (No in step S**1005**), the light-emission control unit **1005** determines that, although a user is talking into the audio input apparatus **1000**, the used condition of the audio input apparatus **1000** discussed with respect to FIG. **8** is not appropriate so that a good speech quality is not maintained. Then, the light-emission control unit **1005** turns on the LED **1006** as shown in No. **3** of FIG. **13** (step S**1006**). On the other hand, if the speech quality is good (Yes in step S**1005**), the light-emission control unit **1005** determines that the used condition of the audio input apparatus **1000** is appropriate so that a good speech quality is maintained. Then, the light-emission control unit **1005** repeatedly turns on and off as shown in No. **4** of FIG. **13** (step S**1007**).

As described above, in the audio input apparatus (the communication apparatus) **1000** according to the fourth embodiment, the sound pick-up state evaluation unit **1003** determines whether a signal input from the sound pick-up unit **1001** is a speech segment and evaluates the speech quality of a speech signal to be transmitted from the transmitter unit **1002**, to evaluate a sound pick-up state. With the evaluation of a sound pick-up state, the light-emission control unit **1005** controls the LED **1006** in the manner described below.

When the transmission instruction unit **1004** does not instruct the transmitter unit **1002** to transmit a speech signal, the light-emission control unit **1005** turns off the LED **1006**. When the transmission instruction unit **1004** instructs the transmitter unit **1002** to transmit a speech signal, however, a signal input from the sound pick-up unit **1001** is not a speech segment, the light-emission control unit **1005** turns on the LED **1006**. When the transmission instruction unit **1004** instructs the transmitter unit **1002** to transmit a speech signal, a signal input from the sound pick-up unit **1001** is a speech segment, and the speech quality is lower than a specific threshold level, the light-emission control unit **1005** turns on the LED **1006**. Moreover, when the transmission instruction unit **1004** instructs the transmitter unit **1002** to transmit a speech signal, a signal input from the sound pick-up unit **1001** is a speech segment, and the speech quality is equal to or higher than the specific threshold level, the light-emission control unit **1005** repeatedly turns on and off the LED **1006**.

As described above, the light-emission control unit **1005** controls the emission state of the light emission unit **1006** (that is the on-off state of the LED) according to the light-emission control process shown in FIG. **14**, to properly notify a user of the speech quality.

Fifth Embodiment

FIG. **15** is a block diagram schematically showing the configuration of an audio input apparatus (a communication apparatus) **2000** according to a fifth embodiment of the present invention.

The audio input apparatus **1200** is provided with a first sound pick-up unit **1021**, a second sound pick-up unit **1022**, a noise-cancellation processing unit **1007**, a noise suppressor unit **1008**, a transmitter unit **1002**, a transmission instruction unit **1004**, a sound pick-up state evaluation unit **1003**, a light-

emission control unit **1005**, and a light emission unit **1006**. The sound pick-up state evaluation unit **1003** has a noise-cancellation effect evaluation unit **1010**, a microphone-direction determination unit **1011**, a speech-quality evaluation unit **1012**, and a speech-segment determination unit **1009**.

The basic configuration of the audio input apparatus **2000** is the same as the audio input apparatus **1000** of the fourth embodiment shown in FIG. **12**. However, the audio input apparatus **2000** has the noise-cancellation processing unit **1007** and the noise suppressor unit **1008** for a noise suppression process in the time and frequency domain, respectively, to improve the speech quality of a speech signal to be transmitted.

The noise-cancellation processing unit **1007** and the noise suppressor unit **1008** correspond to the noise-cancellation processing unit **204** and the noise suppressor unit **205**, respectively, shown in FIG. **4**, hence the explanation of the units **1007** and **1008** being omitted. Moreover, the noise-cancellation effect evaluation unit **1010**, the microphone-direction determination unit **1011**, the speech-quality evaluation unit **1012**, and the speech-segment determination unit **1009** correspond to the noise-cancellation effect evaluation unit **314** (FIG. **7**), the microphone-direction determination unit **313** (FIG. **7**), the speech-quality evaluation unit **103** (FIG. **1**), and the speech-segment determination unit **203** (FIG. **4**), respectively, hence the explanation of the units **1009** to **1012** being omitted.

In the fifth embodiment, the light-emission control unit **1005** receives both of speech-segment and speech-quality information from the sound pick-up state evaluation unit **1003**, for control of the light emission unit **1006**. However, as a variation to the fifth embodiment, the sound pick-up state evaluation unit **1003** may perform speech-segment determination only (with no speech-quality evaluation) so that the light-emission control unit **1005** can control the light emission unit **1006** based on the speech-segment information only. Moreover, as another variation to the fifth embodiment, the sound pick-up state evaluation unit **1030** may output information on the volume of a speech signal obtained by the first sound pick-up unit **1021** so that the light-emission control unit **1005** can control the light emission unit **1006** based on the volume information.

Sixth Embodiment

FIG. **16** is a block diagram schematically showing the configuration of an audio input apparatus **1100** according to a sixth embodiment of the present invention.

The audio input apparatus **1100** is provided with a first sound pick-up unit **1101**, a second sound pick-up unit **1102**, a noise-cancellation processing unit **1103**, a speech-quality evaluation unit **1104**, and an evaluation-result notification unit **1105**.

The first sound pick-up unit **1101** is a microphone attached to the audio input apparatus **1100** to pick up a voice sound. A speech signal (a first speech signal) obtained by the first sound pick-up unit **101** based on the voice sound is output to the noise-cancellation processing unit **1103**. The second sound pick-up unit **1102** is also a microphone attached to the audio input apparatus **1100** to pick up a voice sound. A speech signal (a second speech signal) obtained by the second sound pick-up unit **1102** based on the voice sound is also output to the noise-cancellation processing unit **1103**.

The first sound pick-up unit **1101** corresponds to a main microphone for picking up mainly a user's voice sound, hence provided on the front face of the audio input apparatus **1100**. The second sound pick-up unit **1102** corresponds to a sub-microphone for picking up mainly the surrounding noise for use in a noise cancellation process, hence provided on the rear face of the audio input apparatus **1100**. The arrangements of the first sound pick-up unit (the main microphone) **1101** and the second sound pick-up unit (the sub-microphone) **1102** on the front and rear faces, respectively, of the audio input apparatus **1100** is the best arrangement for an excellent noise cancellation effect, although the second sound pick-up unit **1102** may be provided on the side or bottom face of the audio input apparatus **1100**, or inside the audio input apparatus **1100**.

The noise-cancellation processing unit **1103** performs a noise-cancellation process (a noise-component suppression process) based on the first speech signal and the second speech signal (used as a reference signal) input from the main microphone **1101** and the sub-microphones **1102**, respectively.

In this embodiment, the noise-cancellation processing unit **1103** performs the noise cancellation process to the first speech signal input from the main microphone **1101** for each frame of a specific constant duration (256 samples, for example). In detail, the noise-cancellation processing unit **1103** is equipped with an adaptive filter to generate a reversed-phase component of a noise component mixed into a voice component at the main microphone **1101**, as a noise cancellation signal, based on a voice sound picked up by the sub-microphone **1102**. Then, the noise-cancellation processing unit **1103** adds the first speech signal input from the main microphone **1101** and the noise cancellation signal to suppress a noise component mixed into a voice component at the main microphone **1101**. A speech signal after the noise cancellation is output to the speech-quality evaluation unit **1104**.

The speech-quality evaluation unit **1104** evaluates the speech quality of the noise-cancelled signal input from the noise-cancellation processing unit **1103** and outputs an evaluation result to the evaluation-result notification unit **1105**. The speech-quality evaluation unit **1104** evaluates the speech quality of the noise-cancelled signal based on whether the noise cancellation is effective or not at the noise-cancellation processing unit **1103**.

The speech-quality evaluation unit **1104** may determine whether the noise cancellation is effective or not based on the level of attenuation of the first speech signal from the main microphone **1101**, that has undergone the noise cancellation process at the noise-cancellation processing unit **1103**. In this case, the speech-quality evaluation unit **1104** calculates the level of attenuation of the first speech signal from the main microphone **1101** after the noise cancellation process and determines that the noise cancellation is effective when the level of attenuation is equal to or higher than a specific threshold level. In detail, the speech-quality evaluation unit **1104** compares average power of a first speech signal before the noise cancellation process and average power of a first speech signal after the noise cancellation process to determine whether the noise cancellation is effective based on a comparison result.

The evaluation-result notification unit **1105** notifies a user of the evaluation result input from the speech-quality evaluation unit **1104** as to whether the speech quality is good or bad. The speech-quality evaluation unit **1104** evaluates the speech quality of the noise-cancelled signal based on whether the noise cancellation is effective or not at the noise-cancellation processing unit **1103**. Therefore, actually, the evaluation-result notification unit **1105** notifies a user of whether the noise cancellation is effective or not at the noise-cancellation processing unit **1103**.

The evaluation-result notification unit **1105** may visually notify a user of whether the speech quality is good or not, or may notify a user of the speech quality with a warning sound through a speaker. Moreover, the evaluation-result notification unit **1105** may be equipped with a vibration element to notify a user, with vibration, of whether the noise cancellation is effective or not.

However, in this embodiment, it is supposed that the audio input apparatus **1100** is used in an environment in which physical laborers work under heavy surrounding noise, so that the notification of speech quality to a user is made visually, not by means of sounds that may not be heard due to the surrounding noise or by means of vibration that may not be sensed by a user if the user is moving violently. In other words, in this embodiment, the evaluation-result notification unit **1105** has a visual means, such as an LED to be turned on and off, that indicates whether the noise cancellation function is effectively working or not.

The operation of the audio input apparatus **1100** will be explained with a flowchart shown in FIG. **17**.

The noise-cancellation processing unit **1103** performs a noise cancellation process based on a first speech signal and a second speech signal input from the main microphone **1101** and the sub-microphone **1102**, respectively (step S**1101**). In detail, the noise-cancellation processing unit **1103** performs a process, per frame, of adding a reversed-phase component of a noise component mixed into a voice component at the main microphone **1101**, generated based on the second speech signal input from the sub-microphone **1102**, to the first speech signal input from the main microphone **1101**. With this process, a noise component mixed with the first speech signal at the main microphone **1101** is suppressed. A noise-cancelled signal is output to the speech-quality evaluation unit **1104**.

Then, the speech-quality evaluation unit **1104** evaluates the speech quality of a speech signal after the noise cancellation (step S**1102**). In detail, the speech-quality evaluation unit **1104** compares average power Pin of the first speech signal input from the main microphone **1101** before the noise cancellation and average power Pnc of the noise-cancelled signal from the noise-cancellation processing unit **1103** after the noise cancellation and, based on the comparison, determines whether the noise cancellation function of the noise-cancellation processing unit **1103** is effectively working. For example, the speech-quality evaluation unit **1104** may determine that the speech quality is good because of effective noise cancellation if the level of attenuation (Pin−Pnc) caused by the noise cancellation is equal to or higher than a first specific threshold level Pth that is a criterion level on the noise cancellation effect. Moreover, the speech-quality evaluation unit **1104** may determine that the speech quality is good because of effective noise cancellation if the power ratio (Pin/Pnc) is equal to or higher than a second specific threshold level Pth' that is another criterion level on the noise cancellation effect. Any other techniques can be used as long as the speech quality can be properly evaluated.

If the speech quality is evaluated as good (Yes in step S**1102**), the process returns to step S**1101** to continue the noise cancellation. On the other hand, if the speech quality is evaluated as bad (No in step S**1102**), that is, the noise-cancellation function is not working effectively, hence a good speech quality is not obtained, the evaluation-result notification unit **1105** notifies a user of the bad result of evaluation (step S**1103**).

The main purpose for the evaluation-result notification unit **1105** to notify a user of a result of evaluation is instructing the user of the correct way of holding the microphone, which results in enhanced noise cancellation effect and in transmission of a clear voice sound. Therefore, the notification of a result of evaluation to a user from the evaluation-result notification unit **1105** means the notification of a used condition to a user as to whether the audio input apparatus **1100** is being used appropriately.

As described above, the audio input apparatus **1100** according to the sixth embodiment has the notification (alarm) mechanism of notifying of a used condition to a user as to whether it is being used appropriately. With this notification (alarm) mechanism, a user can know whether the noise cancellation function is working effectively. When the user notices that the noise cancellation function is not working effectively, the user can change the way of holding the audio input apparatus **1100** (or the microphone), the distance between the microphone and user's mouth etc. to make the noise cancellation function work effectively so that a clear voice sound can be transmitted.

Accordingly, the audio input apparatus **1100** according to the sixth embodiment leads a user to hold a microphone in a correct manner so that the noise cancellation function can work at a maximum level to transmit a clear voice sound even in a noisy environment. Therefore, the user can check whether the user's voice sound is clearly transmitted.

Moreover, the audio input apparatus **1100** in this embodiment can be used for training workers on how to correctly use a noise cancellation microphone to which the present invention can be applied.

In known noise cancellation microphones, there is no way to know the range of distance and angle with respect to the user's mouth for appropriate use. Thus, there are problems such that a user talks into the microphone at a too close distance in order to transmit a clear voice sound, a user continues talking even if a clear voice sound is not transmitted due to ineffective noise cancellation which results in miscommunication, and so on.

On the other hand, as described above, the audio input apparatus **1100** according to the sixth embodiment can solve such problems and provide high utility in various environments.

In detail and as described above, the noise-cancellation processing unit **1103** performs the noise-cancellation process based on the first and second speech signals input from the main microphone **1101** and the sub-microphones **1102**, respectively. More in detail, based on the second speech signal input from the sub-microphone **1102**, the noise-cancellation processing unit **1103** generates a reversed-phase component of a noise component mixed into a voice component at the main microphone **1101** and adds the reversed-phase component to the first speech signal input from the main microphone **1101** in the noise cancellation process.

Then, the speech-quality evaluation unit **1104** evaluates the noise cancellation effect at the noise-cancellation processing unit **1103** and the evaluation-result notification unit **1105** notifies a user of the result of evaluation at the speech-quality evaluation unit **1104**.

In detail, the speech-quality evaluation unit **1104** determines whether the noise cancellation function of the noise-cancellation processing unit **1103** is working effectively. If it is determined that the noise cancellation function is working effectively, the evaluation-result notification unit **1105** notifies a user that the noise cancellation function is working effectively so that the speech quality is good.

The speech-quality evaluation unit **1104** determines whether the noise cancellation function is working effectively by comparing the average power before and after the noise cancellation.

The speech-quality evaluation unit **1104** may determine that the noise cancellation function is working effectively if the following relational expression (3) is satisfied

$$Pin-Pnc>Pth \quad (3)$$

in which Pin is the average power of the first speech signal input from the main microphone **1101** before the noise cancellation, Pnc is the average power of the noise-cancelled signal input from the noise-cancellation processing unit **1103** after the noise cancellation, and Pth is a first specific threshold level that is a criterion level on the noise cancellation effect.

Moreover, the speech-quality evaluation unit **1104** may determine that the noise cancellation function is working effectively if the following relational expression (4) is satisfied

$$Pin/Pnc>Pth' \quad (4)$$

in which Pin/Pnc is the power ratio before and after the noise cancellation, and Pth' is a second specific threshold level that is another criterion level on the noise cancellation effect.

In the sixth embodiment, the evaluation-result notification unit **1105** has a visual means, such as an LED to be turned on and off, that indicates whether the noise cancellation function is working effectively or not. Not only that, the evaluation-result notification unit **1105** may be equipped with a liquid crystal display or the like to indicate whether the noise cancellation function is working effectively or not. Moreover, the evaluation-result notification unit **1105** may be equipped with a vibration means, such as a vibrator, so that a user can know whether the noise cancellation is effective or not when the user feels vibration while holding the audio input apparatus **1100**.

Furthermore, the evaluation-result notification unit **1105** may be provided with a notification mechanism that notifies a user only when the noise cancellation is effective and hence the speech quality is good, as a result of evaluation at the speech-quality evaluation unit **1104**. With this notification mechanism, the user can know that the used condition of the audio input apparatus **1100** is not good if there is no notification.

Seventh Embodiment

Described next is an audio input apparatus **1200** according to a seventh embodiment of the present invention, which has a power saving function in comparison with the audio input apparatus **1100** of the sixth embodiment. In the audio input apparatus **1100**, the speech-quality evaluation unit **1104** performs an average-power calculation process, a comparison process, etc., which are relatively power consuming processes, in order for the evaluation-result notification unit **1105** to notify a user of whether noise cancellation is being effective. However, the notification with such power consuming processes is useless while a user is not talking into the audio input apparatus **1100**. The audio input apparatus **1200** in the seventh embodiment is provided with a new configuration to solve such a problem.

FIG. **18** is a block diagram schematically showing the configuration of the audio input apparatus **1200** according to the seventh embodiment of the present invention.

The audio input apparatus **1200** is provided with a first sound pick-up unit **1101** (a main microphone), a second sound pick-up unit **1102** (a sub-microphone), a noise-cancellation processing unit **1203**, a speech-quality evaluation unit **1204**, an evaluation-result notification unit **1205**, a speech-segment determination unit **1206**, a noise suppresser unit **1207**, and a transmitter unit **1208**. The evaluation-result notification unit **1205** has a light-emission control unit **1209** and a light-emitting device **1210** for visual notification.

The speech-segment determination unit **1206** detects a speech segment by speech segment determination based on a first speech signal input from the main microphone **1101**. In detail, the speech-segment determination unit **1206** converts the first speech signal input from the main microphone **1101** into a signal component in unit of a specific length in the frequency domain and analyzes a spectrum component of the signal component thus converted into the frequency domain to determine whether it is a vowel, a consonant, or a noise component. The speech-segment determination unit **1206** outputs a speech-segment indication signal that indicates a speech segment to the noise-cancellation processing unit **1203** and the speech-quality evaluation unit **1204**.

The noise-cancellation processing unit **1203** performs a noise cancellation process based on the first and second speech signals input from the main microphone **1101** and the sub-microphone **1102**, respectively, in the same manner as the noise-cancellation processing unit **1103** shown in FIG. **16**. Then, the noise-cancellation processing unit **1203** outputs a noise-cancelled signal to the speech-quality evaluation unit **1204** and the noise suppressor unit **1207**.

The speech-quality evaluation unit **1204** evaluates the speech quality of the noise-cancelled signal input from the noise-cancellation processing unit **1203** by using the speech-segment indication signal input from the speech-segment determination unit **1206**. In this embodiment, the speech-quality evaluation unit **1204** performs speech quality evaluation while a speech segment is being detected at the speech-segment determination unit **1206**. The speech-quality evaluation unit **1204** outputs an evaluation result that is the information indicating the speech quality of the noise-cancelled signal to the light-emission control unit **1209** of the evaluation-result notification unit **1205**.

Moreover, the speech-quality evaluation unit **1204** determines whether the noise cancellation function of the noise-cancellation processing unit **1203** is working effectively and also determines whether a power level of the noise-cancelled signal is equal to or higher than a specific threshold level. With these evaluation and determination, the speech-quality evaluation unit **1204** evaluates the speech quality of a noise-cancelled signal reliably, that is to be transmitted from the transmitter unit **1208**.

The light-emission control unit **1209** is a driver for driving the light-emitting device **1210** by outputting a drive current thereto in accordance with the information indicating the speech quality of the noise-cancelled signal input from the speech-quality evaluation unit **1204**. With the drive current, the light-emission control unit **1209** turns on or repeatedly turns on and off the light-emitting device **1210** to notify a user of speech quality. The light-emitting device **1210** may be an LED. In this case, the light-emission control unit **1209** repeatedly turns on and off the LED **1210** to notify a user of speech quality when it receives information indicating a good or bad speech quality from the speech-quality evaluation unit **1204**.

The noise suppressor unit **1207** suppresses a noise component other than a voice component that appears on the frequency axis of the noise-cancelled signal input from the noise-cancellation processing unit **1203**. Then, the noise suppressor unit **1207** returns a noise-component-suppressed signal into the time domain and outputs the signal to the transmitter unit **1208**. The transmitter unit **1208** performs speech coding to the signal from the noise suppressor unit **205** and transmits the signal to a receiver apparatus or the like.

Explained next is an operation of the audio input apparatus **1200** with respect to a flowchart of FIG. **19**.

The speech-segment determination unit **1206** performs a speech-segment determination process to determine whether a user is talking into the audio input apparatus **1200** based on the first speech signal input from the main microphone **1101** (step S**1201**). If no speech segment is detected (No in step S**1202**), the process returns to step S**1201** to continue the speech-segment determination process. On the other hand if a speech segment is detected (Yes in step S**1202**), the process moves onto step S**1203**.

The speech-quality evaluation unit **1204** calculates average power per frame of the first speech signal input from the main microphone **1101** when the noise-cancellation processing unit **1203** performs a noise-cancellation process for each frame (step S**1203**). Then, the speech-quality evaluation unit **1204** calculates average power of the noise-cancelled signal input from the noise-cancellation processing unit **1203** (step S**1204**).

Next, the speech-quality evaluation unit **1204** compares the average power of the first speech signal before the noise cancellation process and the average power of the noise-cancelled signal after the noise cancellation process (step S**1205**).

If it is determined that the power ratio of the noise-cancelled signal to the first speech signal is equal to or higher than a specific first threshold level, (No in step S**1205**), it is determined that the noise cancellation function is not working effectively, and hence the speech quality of the noise-cancelled signal is bad (step S**1207**).

On the other hand, if it is determined that the power ratio of the noise-cancelled signal to the first speech signal is lower than the first threshold level (Yes in step S**1205**), the speech-quality evaluation unit **1204** determines whether the average power of the noise-cancelled signal is equal to or higher than a specific threshold level (step S**1206**).

If it is determined that the average power of the noise-cancelled signal is lower than the second threshold level (No in step S**1206**), it is determined that the speech quality of the noise-cancelled signal is bad (step S**1207**). On the other hand, if it is determined that the average power of the noise-cancelled signal is equal to or higher than the second threshold level (Yes in step S**1206**), it is determined that the speech quality of the noise-cancelled signal is good with an appropriate voice level (step S**1208**).

The speech-quality evaluation unit **1204** outputs an evaluation result (obtained in step S**1207** or S**1208**) that is information indicating the speech quality of the noise-cancelled signal to the light-emission control unit **1209** of the evaluation-result notification unit **1205** (step S**1209**) for notification of the speech quality through the light-emitting device **1210**.

As described above, the audio input apparatus **1200** in the seventh embodiment is provided further with the speech-segment determination unit **1206** that detects a speech segment based on the first speech signal input from the main microphone **1101**, in comparison with the audio input apparatus **1100** in the sixth embodiment. Then, the speech-quality evaluation unit **1204** performs speech quality evaluation while a speech segment is being detected at the speech-segment determination unit **1206**.

With this configuration described above, unnecessary power consumption is prevented, which otherwise occurs due to unnecessary operation at the speech-quality evaluation unit **1204** while a user is not talking into the audio input apparatus **1200**. Moreover, with the configuration described above, it does not occur that the evaluation-result notification unit **1105** makes false notification to a user on a used condition of the main microphone **1101** while no speech segment is being detected.

The speech-segment determination unit **1206** may be provided with a frequency converter for converting the first speech signal input from the main microphone **1101** into a signal component in unit of a specific length in the frequency domain and a speech determiner for determining whether the first speech signal carries a voice component or a noise component based on a spectrum component obtained by frequency conversion, for speech segment determination. The speech determiner may determine whether the sound carried by the first speech signal is a vowel, a consonant, or a noise component.

Moreover, as described above, the speech-quality evaluation unit **1204** employs two evaluation criteria as to whether the noise cancellation function of the noise-cancellation processing unit **1203** works effectively and as to whether a speech signal after the noise cancellation has a signal level equal to or higher than a specific threshold level, for speech quality evaluation. With these two evaluation criteria, the speech-quality evaluation unit **1204** can evaluate the speech quality reliably to the extend that a recipient of a voice of a user of the audio input apparatus **1200** actually feels and can properly notify the user of the evaluation through the evaluation-result notification unit **1205**.

Under the evaluation criteria, the speech-quality evaluation unit **1204** calculates the power ratio of the noise-cancelled signal to the first speech signal input from the main microphone **1101** during a speech segment and compares the power ratio to a specific threshold level to determine whether the sound level after the noise cancellation to the sound level at the main microphone **1101** is equal to or higher than a certain level. With this comparison, it is determined whether the user's mouth is close enough to the main microphone **1101**. Then, the speech-quality evaluation unit **1204** notifies the user of an evaluation result through the evaluation-result notification unit **1205** while the user is talking into the main microphone **1101**. When the light-emitting device **1210** of the evaluation-result notification unit **1205** is an LED, the notification can be made with repeated turn-on and -off of the LED.

In the seventh embodiment, the speech-quality evaluation unit **1204** determines whether the noise cancellation function is working effectively based on a noise-cancelled signal output from the noise-cancellation processing unit **1203** and then evaluates the speech quality as the final evaluation. However, the evaluation technique is not limited to this. For example, the speech-quality evaluation unit **1204** may evaluate the speech quality of a signal from the noise suppresser unit **1207** after the noise suppression on the frequency axis.

Eighth Embodiment

Described next is an audio input apparatus **1300** according to an eighth embodiment of the present invention, that features more reliable evaluation capability for notification than the audio input apparatus **1200** of the seventh embodiment.

In the audio input apparatus **1200** of the seventh embodiment, the speech-quality evaluation unit **1204** may sometimes erroneously evaluate the noise cancellation effect even if the noise cancellation function of the noise-cancellation processing unit **1203** is not working effectively. The erroneous evaluation of the noise cancellation effect may occur, for example, while a user is talking into the audio input apparatus **1200** that is not oriented in an appropriate direction to the user so that the user's voice sound is also input to the sub-microphone **1102** at a high level if provided at the rear face of the audio input apparatus **1200** with respect to the main microphone **1101** provided at the front face thereof.

The noise-cancellation processing unit **1203** performs the noise cancellation process using a signal from the sub-microphone **1102** as a reference signal. Therefore, the noise-cancellation processing unit **1203** may erroneously treat a voice component input to the sub-microphone **102** as a noise component so that a voice component input to the main microphone **1101** which should remain is also inevitably suppressed. Suppose that there is an intense noise source in front of the audio input apparatus **1200** that is not oriented in an appropriate direction to the user. In this case, it may happen that a noise component from the noise source remains after the noise cancellation process so that the signal level of a noise-cancelled signal goes beyond a threshold level which results in that the speech quality is erroneously evaluated as good and notified to the user.

It is achieved in the eighth embodiment that the audio input apparatus **1300** evaluates the speech quality reliably even in such a case discussed above and properly notifies a user of the speech quality evaluation.

FIG. **20** is a block diagram schematically showing the configuration of the audio input apparatus **1300** according to the eighth embodiment of the present invention.

The audio input apparatus **1300** is provided with a first sound pick-up unit **1101** (a main microphone), a second sound pick-up unit **1102** (a sub-microphone), a noise-cancellation processing unit **1203**, a speech-quality evaluation unit **1304**, an evaluation-result notification unit **1205**, a speech-segment determination unit **1206**, a noise suppresser unit **1207**, a transmitter unit **1208**, a microphone-direction determination unit **1311**, and a noise-cancellation effect evaluation unit **1312**. The evaluation-result notification unit **1205** has a light-emission control unit **1209** and a light-emitting device **1210** for visual notification.

While the speech-segment determination unit **1206** is determining that a first speech signal input from the main microphone **201** is a speech segment, the microphone-direction determination unit **1311** detects a phase difference between voice sounds picked by the main microphone **1101** and the sub-microphone **1102** and determines the direction of the main microphone **1101** (a main-microphone direction, hereinafter) with respect to a user based on the phase difference. The microphone-direction determination unit **1311** outputs a determination result on the main-microphone direction to the speech-quality evaluation unit **1304**.

FIG. **21** is a view illustrating a direction-to-phase relationship of the audio input apparatus **1300** with respect to a user, or a phase difference of voice sounds depending on the main-microphone direction.

As shown in (a) of FIG. **21**, when a user faces the audio input apparatus **1300** at the front side with the main microphone **1101** attached thereto, in a normal used condition, there is a large phase difference between a voice sound that is picked up by the main microphone **1101** through a straight path and a voice sound that is picked up by the sub-microphone **1102** through a roundabout path. On the other hand, as shown in (b) of FIG. **21**, when the audio input apparatus **1300** is inclined toward a user, there is a small phase difference between voice sounds picked up by the main microphone **1101** and the sub-microphone **1102** due to a shorter distance between the user's mouth and the two microphones. In particular, when the main microphone **1101** attached to the audio input apparatus **1300** at the front side is inclined toward a user at 90 degrees, the distances from the user's mouth to the main microphone **1101** and to the sub-microphones **1102** are almost equal to each other, so that the phase difference is almost zero.

Under consideration of the change in phase difference depending on the positional relationship between a user and the audio input apparatus **1300** discussed above, the microphone-direction determination unit **1311** compares a phase difference detected between the first and second speech signals output from the main microphone **1101** and the sub-microphone **1102**, respectively, with a specific threshold value. When the phase difference is smaller than the specific threshold value, the microphone-direction determination unit **1311** assumes that the main-microphone direction is not toward a user, such as shown in (b) of FIG. **21** and determines that the user is not using the audio input apparatus **1300** appropriately. On the other hand, when the phase difference is equal to or larger than the specific threshold value, the microphone-direction determination unit **1312** assumes that the main-microphone direction is toward a user, such as shown in (a) of FIG. **21**, and determines that the user is using the audio input apparatus **1300** appropriately.

The noise-cancellation effect evaluation unit **1312** determines whether the noise cancellation function of the noise-cancellation processing unit **1203** is working effectively based on a noise-cancelled signal input from the noise-cancellation processing unit **1203**. In detail, the noise-cancellation effect evaluation unit **1312** determines whether the noise cancellation function is working effectively based on average power Pin of the first speech signal input from the main microphone **1101** before the noise cancellation and average power Pnc of the noise-cancelled signal from the noise-cancellation processing unit **1203** after the noise cancellation. For example, the noise-cancellation effect evaluation unit **1312** may determine that the noise cancellation function is working effectively if the following relational expression (5) is satisfied

$$Pin-Pnc>Pth \tag{5}$$

in which Pth is a threshold level of attenuation that is a criterion level on the noise cancellation effect. Moreover, the noise-cancellation effect evaluation unit **1312** determines whether the signal power of a speech signal after noise cancellation (a noise-cancelled signal) is equal to or higher than a specific threshold level. The noise-cancellation effect evaluation unit **1312** outputs two determination results described above to the speech-quality evaluation unit **1304**.

The speech-quality evaluation unit **1304** evaluates the speech quality of the noise-cancelled signal based on the determination result output from the microphone-direction determination unit **1311** and the two determination results output from the speech-quality evaluation unit **1304**. In detail, the speech-quality evaluation unit **1304** determines that the speech quality of the noise-cancelled signal is good: when the determination result output from the microphone-direction determination unit **1311** shows that the main microphone **1101** is oriented toward a user; and when the two determination results output from the speech-quality evaluation unit **1304** show that the noise cancellation function is working effectively and the signal power of the noise-cancelled signal is equal to or higher than the specific threshold level. The speech-quality evaluation unit **1304** outputs a speech-quality evaluation signal that indicates an evaluation result to the evaluation-result notification unit **1105**, as information indicating the speech quality.

Explained next is a microphone-direction determination process performed by the microphone-direction determination unit **1311**, with respect to a flowchart of FIG. **22**.

The microphone-direction determination unit **1311** compares the phases of first and second speech signals input from the main microphone **1101** and the sub-microphone **1102**,

respectively, to detect a phase difference therebetween (step S**1301**). Then, the microphone-direction determination unit **1311** compares the phase difference between the first and second speech signals with a specific threshold value to determine whether the phase difference is smaller than the specific threshold value (step S**1302**). The comparison of phase difference is done based on the fact that the change in orientation of the main microphone **1102** is directly reflected in the phase difference as discussed with reference to FIG. **21**.

If the phase difference is equal to or larger than the specific threshold value (No in step S**1302**), the microphone-direction determination unit **1311** assumes that the positional relationship between the main microphone **1101** and the user's mouth is good, such as shown in (a) of FIG. **21**, and determines that the user is using the audio input apparatus **1300** appropriately. On the other hand, if the phase difference is smaller than the specific threshold value (Yes in step S**1302**), the microphone-direction determination unit **1311** assumes that the positional relationship between the main microphone **1101** and the user's mouth is bad, such as shown in (b) of FIG. **21**, and determines that the user is using the audio input apparatus **1300** inappropriately.

Then, the microphone-direction determination unit **1311** outputs a determination result obtained in step S**1303** or S**1304** to the speech-quality evaluation unit **1304** (step S**1305**), as a first determination result that indicates whether or not the main-microphone direction is appropriate, that is, whether or not the audio input apparatus **1300** is used appropriately.

Explained next is a noise-cancellation effect evaluation process performed by the noise-cancellation effect evaluation unit **1312**, with respect to a flowchart of FIG. **23**.

The noise-cancellation effect evaluation unit **1312** is in a waiting mode to receive a speech-segment indication signal that is generated by the speech-segment determination unit **1206** when it determines that a first speech signal input from the main microphone **1101** is a speech segment (step S**1311**). When the speech-segment indication signal is input (Yes in step S**1311**), the noise-cancellation effect evaluation unit **1312** performs step S**1312**, whereas if not (No in step S**1311**), it is still in the waiting mode to receive the speech-segment indication signal. Steps S**1312** to S**1315** are the same as or analogous to steps S**1203** to S**1206** shown in FIG. **19**, and the hence the explanation thereof is omitted for brevity.

The noise-cancellation effect evaluation unit **1312** determines that the noise cancellation function is not working effectively (step S**1316**) in either one of the following two cases: if it is determined that the power ratio of the noise-cancelled signal to the first speech signal is equal to or higher than a specific first threshold level, (No in step S**1314**); and if it is determined that the power ratio of the noise-cancelled signal to the first speech signal is lower than a specific second threshold level (No in step S**1315**).

On the other hand, the noise-cancellation effect evaluation unit **1312** determines that the noise cancellation function is working effectively (step S**1317**) if it is determined that the average power of the noise-cancelled signal is equal to or higher than the second threshold level (Yes in step S**1315**).

The speech-quality evaluation unit **1312** outputs an evaluation result obtained in step S**1316** or S**1317** to the speech-quality evaluation unit **1304** (step S**1318**), as a second determination result that is information indicating whether or not the noise cancellation function is working effectively.

Explained next is a speech-quality evaluation process performed by the speech-quality evaluation unit **1304**, with respect to a flowchart of FIG. **24**.

The first determination result obtained through the process shown in FIG. **22** is input from the microphone-direction determination unit **1311** to the speech-quality evaluation unit **1304** (step S**1321**). Then, the speech-quality evaluation unit **1304** determines whether the first determination result shows that the positional relationship between the main microphone **1101** and the user's mouth is good (step S**1322**).

If the first determination result shows that the positional relationship between the main microphone **1101** and the user's mouth is bad (No in step S**1322**), the speech-quality evaluation unit **1304** instructs the evaluation-result notification unit **1205** to make warning (step S**1323**) by turning on the light-emitting device **1210**.

On the other hand, if the first determination result shows that the positional relationship between the main microphone **1101** and the user's mouth is good (Yes in step S**1322**), the second determination result obtained through the process shown in FIG. **23** is input from the noise-cancellation effect evaluation unit **1312** to the speech-quality evaluation unit **1304** (step S**1324**).

If the second determination result shows that the noise cancellation function is not working effectively (No in step S**1325**), the speech-quality evaluation unit **1304** instructs the evaluation-result notification unit **1205** to make warning (step S**1326**) by turning on the light-emitting device **1210**.

On the other hand, if the second determination result shows that the noise cancellation function is working effectively (Yes in step S**1325**), the speech-quality evaluation unit **1304** determines that the speech quality is good (step S**1327**) and instructs the evaluation-result notification unit **1205** to notify a user of a good speech quality. The good speech quality may be set as the default so that the evaluation-result notification unit **1205** needs not to notify anything. In the case of this default setting, when the evaluation-result notification unit **1205** is not notifying anything while a user is talking into the audio input apparatus **1300**, it means that the speech quality is good.

The warning made by the evaluation-result notification unit **1205** in step S**1323** or S**1326** is to call user's attention to make the user notice that the audio input apparatus **1300** is not being used in a good used condition. A user then notices that a clear voice sound is not being transmitted and tries to change the position or orientation of the main microphone **1101** to improve the speech quality. With this change, if both of the first and second determination results become good, the warning is stopped and then the user notices that the audio input apparatus **1300** is being used in a good used condition.

As described above, the audio input apparatus **1300** in the eighth embodiment evaluates the speech quality by determining whether the main microphone **1101** is oriented towards an appropriate direction and also whether the noise cancellation function is working effectively. Therefore, more reliable speech quality evaluation is achieved with checking the used condition using the phase difference between voice sounds input to the main microphone **1101** and the sub-microphone **1102**, in addition to the noise-cancellation effect determination which otherwise leads to erroneous evaluation if this determination only is employed.

The purpose of using the microphone-direction determination unit **1311** concerning the orientation of the main microphone **1101**, in addition to the noise-cancellation effect evaluation unit **1312**, is to raise the evaluation accuracy in a noisy environment. More important purpose of using the microphone-direction determination unit **1311** is, however, to instruct a user on how to hold the main microphone **1101** (or the audio input apparatus **1300**) appropriately.

In detail, the noise-cancellation effect evaluation unit **1312** may not perform reliable evaluation, for example, in a quiet environment with small surrounding noise. Instruction on how to hold the main microphone **1101** appropriately may not always be done in an environment with the surrounding noise. Moreover, the noise cancellation function may work effectively even if a user does not hold the main microphone **1101** appropriately, which depends on the environment. Under consideration of these factors, the warning based on microphone-direction determination is prioritized than the warning based on noise-cancellation effect evaluation as shown in FIG. **24**, for the purpose to instruct a user on how to hold the main microphone **1101** in an appropriate manner.

When a negative result is given by either the microphone-direction determination unit **1311** or the noise-cancellation effect evaluation unit **1312**, the evaluation-result notification unit **1205** makes warning through the light-emitting device **1210** (such as an LED) to instruct a user on correct holding of the main microphone **1101**. The microphone-direction determination process and the noise-cancellation effect evaluation process shown in FIGS. **22** and **23**, respectively, can be repeated at a very short interval (such as 1/30 seconds). In this case, the evaluation-result notification unit **1205** may be equipped with a function of keeping the same mode for a certain time so that a user can easily notice, thereby enhancing a notification effect.

Ninth Embodiment

Described next is an audio input apparatus according to a ninth embodiment of the present invention, which is a noise cancellation microphone having a simplex wireless transmission function, equipped with a switch attached to a noise cancellation microphone unit for switching between transmission and reception.

Moreover, the audio input apparatus in the ninth embodiment is a dual-microphone type audio input apparatus having a microphone on each of the front and rear faces, with an active noise-cancellation function. In detail, the audio input apparatus in the ninth embodiment is a noise cancellation microphone for transmission of a clear voice sound with cancellation of a signal of the surrounding noise that is mixed with user's voice sound by using speech signals input through two microphones. In a normal arrangement, a main microphone and a sub-microphone are provided on the front face (that faces a user) and the rear face of the audio input apparatus, respectively, for mainly picking up the user's voice sound and the surrounding noise, respectively.

FIG. **25** is a view showing the exterior appearance of the audio input apparatus (a noise cancellation microphone) **1400** with a front view (a) and a rear view (b), according to the ninth embodiment of the present invention.

The audio input apparatus **1400** is provided with a noise-cancellation microphone unit **1420** and a wireless communication unit **1440** connected to each other with a cord **1430**. The noise-cancellation microphone unit **1420** is equipped with a main microphone **1401** for mainly picking up a user's voice sound and a speaker **1421** on the front face, an LED on the upper face, and a PTT unit **1422** on the side face. Moreover, the noise-cancellation microphone unit **1420** is equipped with a sub-microphone **1402** for mainly picking up the surrounding noise and a belt clip **1423** for holding the microphone unit **1420** by a belt on the rear face.

FIG. **26** is a block diagram schematically showing the configuration of the audio input apparatus (the noise cancellation microphone) **1400** according to the ninth embodiment of the present invention. In FIG. **26**, the units the same as or analogous to those shown in FIG. **20** are given the same reference numerals and the explanation thereof is omitted for brevity.

A wireless transmitter unit **1408** and a wireless receiver unit **1413** are installed in the wireless communication unit **1440**. The transmitter unit **1408** performs speech coding to a speech signal after the noise suppression by the noise suppressor unit **1207** according to need and transmits a speech-coded signal by wireless transmission. The wireless receiver unit **1413** receives a speech signal transmitted by wireless transmission and outputs the received speech signal to the speaker **1421**. The speaker **1421** outputs the speech signal as a voice sound.

The PTT unit **1422** is a switch attached to the noise-cancellation microphone unit **1420** for switching a communication mode between the transmission mode and the standby mode. When a user talks into the audio input apparatus **1400** for sending a message, the user pushes the PTT unit **1422** to switch the communication mode from the standby mode to the transmission mode. While the user is pushing the PTT unit **1422**, the audio input apparatus **1400** is in the transmission mode entirely, with each unit shown in FIG. **26** related to the transmission mode being working while the wireless receiver unit **1413** being in the waiting mode. While the PTT unit **1422** is being pushed, the PTT unit **1422** outputs a transmission-mode signal that indicates the transmission mode to an overall evaluation unit **1412**.

The overall evaluation unit **1412** outputs a signal based on a speech-quality evaluation signal that indicates an evaluation result input from a speech-quality evaluation unit **1304** and the transmission-mode signal that indicates the transmission mode input from the PTT unit **1422**, to a light-emission control unit (an LED driver) **1409** of an evaluation-result notification unit **1405**. In other words, the overall evaluation unit **1412** makes an overall determination of how the light-emission control unit **1409** should control an LED **1410** of the evaluation-result notification unit **1405**.

FIG. **27** is a table listing communication modes, speech-quality evaluation results, and LED states. As shown in FIG. **27**, the LED driver **1409** drives the LED **1410** in the following manner. The LED driver **1409** repeatedly turns on and off the LED **1410** while the PTT unit **1422** is being pushed to put the audio input apparatus **1400** in the transmission mode and the speech quality is good. The LED driver **1409** turns on the LED **1410** while the PTT unit **1422** is being pushed to put the audio input apparatus **1400** in the transmission mode and the speech quality is bad, thereby calling user's attention to make the user notice that the audio input apparatus **1400** is not being used in a good condition. Moreover, the LED driver **1409** turns on the LED **1410** while the PTT unit **1422** is being pushed to put the audio input apparatus **1400** in the transmission mode but no speech signal is input thereto. On the other hand, the LED driver **1409** turns off the LED **1410** with no drive current supplied thereto while the PTT unit **1422** is not pushed.

As described above, the audio input apparatus (the noise cancellation microphone) **1400** according to the ninth embodiment of the present invention is a simplex wireless transmission apparatus equipped with the PTT unit **1422** that is to be pushed to switch the communication mode from the standby mode to the transmission mode. It is preferable that a user can distinguish between the standby mode and the transmission mode. For this reason, there is provided the light-emission control unit (the LED driver) **1409** that turns on the LED **1410** while the PTT unit **422** is being pushed to put the communication mode into the transmission mode and turns off the LED **1410** during the standby mode.

Moreover, it is preferable to notify a user who is talking into the audio input apparatus (the noise cancellation microphone) **1400** of whether or not a high-quality voice sound is being transmitted. In other words, it is preferable to notify the user of an evaluation result on whether or not the speech quality is good. In the case of an LED notification device, there is a demand for a smaller number of LEDs in view of the environment in which the audio input apparatus **1400** is to be used, the cost which should be reduced by using a smaller number of parts, etc. Therefore, it is preferable that one and the same LED indicates whether the communication mode is the transmission mode and also whether the speech quality is good. Under consideration of these factors, the light-emission control unit (the LED driver) **1409** has a control function of switching the single LED **1410** between a turned-on state and a turned-off state.

As shown in FIG. **27**, the ninth embodiment employs an evaluation-result notification method in which the LED **1410** is turned on during the transmission mode by pushing the PTT unit **1422** and, particularly, the LED **1410** is repeatedly turned on and turned off during which the speech quality is evaluated as good. This evaluation-result notification method can make a user feel that the audio input apparatus (the noise cancellation microphone) **1400** reacts to the user's talking.

Concerning the method of speech quality evaluation performed by the evaluation speech-quality evaluation unit, there are several ways in addition to those described above, that are applicable in the present invention.

One method of speech quality evaluation will be explained with a flowchart shown in FIG. **28**.

After performing steps S**1411** to S**1413** in the similar manner as steps S**1311** to S**1313** shown in FIG. **23**, the average power of a second speech signal from a sub-microphone is calculated (step S**1414**). The power obtained in step S**1414** can be considered a noise power. It is then determined whether the average power of the second speech is equal to or higher than a specific threshold level (step S**1415**). If it is determined that the average power of second speech is lower than the specific threshold level (No in step S**1415**), the environment is considered to be quiet with a fairly small noise, thereby the speech quality being evaluated as good (step S**1418**).

On the other hand, if it is determined that the average power of the second speech is equal to or higher than the specific threshold level (Yes in step S**1415**), the environment is considered to be noisy, so that it is required that the average power ratio of a noise-cancelled signal after the noise cancellation process to a first speech signal from a main microphone be equal to or lower than a specific threshold level by the noise cancellation process. Then, in step S**1416**, comparison is made between the average power of the first speech signal and that of the noise-cancelled signal to determine whether the noise cancellation process is being performed effectively, which is followed by step S**1417** that is performed in the similar manner as step S**207** shown in FIG. **5**.

With the method shown in FIG. **28**, it is achieved to perform reliable speech quality evaluation under consideration of a noisy environment.

Moreover, a noise-cancellation necessity determination unit may be provided in the present invention to determine whether the noise-cancellation process is necessary at the noise-cancellation processing unit. In detail, there is case in which a voice sound can rather be transmitted clearly without the noise-cancellation process in a quiet environment.

Under consideration of the case mentioned above, the noise-cancellation necessity determination unit calculates the average power of a speech signal obtained at the second sound pick-up unit (the sub-microphone) and compares the average power and a specific threshold value. Then, the noise-cancellation necessity determination unit determines that the noise-cancellation process is necessary due to the surrounding noise if the average power is equal to or higher than the specific threshold level. On the other hand, the noise-cancellation necessity determination unit determines that the noise-cancellation process is not necessary if the average power is lower than the specific threshold level. Based on the determination at the noise-cancellation necessity determination unit, the noise-cancellation processing unit performs the noise cancellation process.

A flag may be prepared for indicating a result of determination at the noise-cancellation necessity determination unit to determine whether or not the noise-cancellation process is necessary. If a flag is set to indicate that the noise-cancellation process is necessary, the noise-cancellation processing unit may perform the noise cancellation process.

Moreover, another flag may be prepared for indicating whether or not the noise-cancellation process is being performed. If a flag is set to indicate that the noise-cancellation process is being performed, the speech-quality evaluation unit may evaluate the speech quality. In this configuration, the speech-quality evaluation unit determines that the speech quality is good if the flag is cleared to indicate that the noise-cancellation process is not being performed. This is because, when the noise-cancellation process is not being performed, the average power of a speech signal obtained at the second sound pick-up unit (the sub-microphone) is lower than the specific threshold value and hence the environment is considered to be quiet. On the other hand, the speech-quality evaluation unit evaluates the speech quality such as shown in FIG. **23** if the flag is set to indicate that the noise-cancellation process is being performed. With the configuration described above, reliable speech quality is achieved with lower power consumption.

Concerning the determination of whether or not the noise-cancellation process is necessary, the technique of determination is not limited to the comparison between the average power of a speech signal obtained at the second sound pick-up unit (the sub-microphone) and a specific threshold value. For example, the noise-cancellation necessity determination unit may determine whether or not the noise-cancellation process is necessary in accordance with a voice incoming direction detected based on the phase difference between the first and second speech signals from the first and second sound pick-up units, respectively.

As described in detail, according to the present invention, improvement in speech quality is achieved with the prevention of misrecognition of the communication mode through notification to a user of the current communication mode (the state of a voice sound being transmitted) in a simplex communication apparatus for which the communication mode is switched between the transmission mode and the standby mode.

For example, in the case of a hand microphone equipped with an LED, whether a voice sound is drowned out by the surrounding noise depends on how a user is holding the microphone, the distance between the user's mouth to the microphone, the level of voice sound, etc. In order to solve such a problem, the communication apparatus according to the present invention is provided with the determination unit for determining whether a user's voice sound is being clearly transmitted based on the information on the noise cancellation process, the information on a voice sound, etc. Moreover, the communication apparatus according to the present invention is provided with the light-emission control unit for con-

trolling an LED to repeatedly turns on and off, turns on or turns off the LED based on the information on whether a voice sound is being transmitted under determination by the determination unit. With the configuration described above, the overall evaluation of speech quality can be notified to a user by means of the LED that is repeatedly turned on and off, turned on or turned off almost in synchronism with user's talking.

When the speech quality of a voice sound being transmitted is good, the light-emission control unit may repeatedly turn on and off the LED at high speed to enhance the speech-quality notification function. The high-speed LED switching achieves speech quality notification almost in synchronism with user's talking so that the user feels almost no out-of-timing between talking and notification. Moreover, the light-emission control unit may turn on the LED continuously when the speech quality is bad during a speech segment to instruct a user to use the communication apparatus in an appropriate manner, thereby transmitting a clear voice sound.

With the speech-quality notification function described above, the present invention can be applied to training in use of a noise cancellation microphone at the first time.

As described above, the present invention is applicable to a dual-microphone type wireless communication apparatus having the active noise-cancellation function. However, the present invention is not limited thereto. For example, the present invention can be applied to a wired communication apparatus, a sound pick-up apparatus such as a noise cancellation microphone, etc. Moreover, a plurality of sub-microphone may be provided for picking up noises for noise cancellation.

As described above in each embodiment, the present invention achieves transmission of clear voice sounds with the enhanced noise-cancellation function by instructing a user to use a noise cancellation microphone correctly. In other words, the purpose of speech quality notification by means of an LED or the like is not indicating the performance of noise cancellation but instructing a user to use a noise cancellation microphone correctly.

This is because there is a problem to be solved that is the effect of noise cancellation depends on how a user holds a microphone, the distance between the user's mouth and the microphone, etc. in a dual-microphone type wireless communication apparatus having the active noise-cancellation function, an external microphone of a wireless communication apparatus, etc.

In detail, different from a close-talking microphone attached to a headset or the like, a microphone attached to a wireless communication apparatus, a hand microphone connected thereto, etc. may have a problem such that the microphone is oriented at an angle of almost 90 degrees to the user's mouth or is distant therefrom too much. In such a case, enough voice sounds do not reach a main microphone while noise components increase relatively, hence noise cancellation ineffective even if performed. Moreover, a user may talk into a microphone while the microphone is being attached to the user's shoulder, chest, etc. so that the user can use both hands freely. In such a case, the performance of noise cancellation is lowered than when a user is holding a microphone in an appropriate manner.

In order to solve such a problem discussed above, in the present invention, the speech quality is evaluated, in other words, it is determined whether a user is holding a microphone in an appropriate manner, using information on the speech or non-speech segment, the level of attenuation by noise cancellation, the microphone orientation based on the phase difference between two microphones, etc. thereby instructing a user of a correct way of holding a microphone.

As described above, the present invention employs a signal processing technique to evaluate the speech quality, in other words, to determine whether a user is holding a microphone in an appropriate manner so that the noise cancellation function can work effectively.

The signal processing technique achieves appropriate processing even if the noise cancellation function is not working effectively in such case where a noise source exists behind a user who is talking into a microphone, the frequency characteristics of a noise component is close to that of a voice component, etc.

In detail, in some of the embodiments described above, there are two determination units. The first determination unit determines whether the noise cancellation function is working effectively. If it is determined that the noise cancellation function is not working effectively, through the notification unit, a warning is given so that a user can change the way of holding a microphone in an appropriate manner. The determination of effectiveness of the noise cancellation function is performed with information indicating whether an input speech signal is a speech segment or not for each certain length (a frame in the embodiments) and information on the level of attenuation of a noise component after the noise cancellation to the input speech signal.

The second determination unit determines whether the user's mouth and a main microphone have an appropriate positional relationship based on the phase difference between input signals from the main microphone and sub-microphone. If it is determined that the user's mouth and the main microphone do not have an appropriate positional relationship, in other words, the main microphone is not oriented towards the user, through the notification unit, a warning is given so that a user can change the way of holding the main microphone in an appropriate manner. The determination at the second determination unit concerning the positional relationship based on the phase difference may be achieved by detecting the incoming direction of a voice sound to be picked up by the main microphone.

In the embodiments of the present invention, the light-emission control unit turns on the light-emitting device (LED) while the PTT unit is being pushed during a non-speech segment, in other words, in the case where the user's voice sound is not detected by the speech-segment determination unit. In detail, based on whether the PTT unit is being pushed or not, the light-emission control unit turns on or off the light-emitting device (LED). More in detail, the light-emission control unit turns on the light-emitting device (LED) when the communication mode is the transmission mode in which the transmission unit transmits a speech signal. On the other hand, the light-emission control unit turns off the light-emitting device (LED) when the communication mode is the standby mode in which the transmission unit does not transmit a speech signal. Moreover, the light-emission control unit repeatedly turns on and off the light-emitting device (LED) when the speech-segment determination unit determines that an input speech signal is a speech segment and when the speech-quality evaluation unit determines that a speech signal to be transmitted from the transmission unit has a good speech quality.

As described, the communication apparatus according to the present invention is provided with a first sound pick-up unit for picking up a voice sound, a transmission unit for transmitting the voice sound to outside as a speech signal, a speech-segment determination unit for determining whether or not the voice sound is a speech segment, a communication-

mode switching unit for switching the communication mode between the transmission mode in which the transmitter unit transmits the speech signal and the standby mode in which the transmitter unit does not transmit the speech signal, a speech-quality evaluation unit for evaluating the speech quality of the speech signal to be transmitted from the transmission unit while the speech-segment determination unit is determining that the voice sound is a speech segment, a light-emitting device for emitting light, and a light-emission control unit for controlling the light-emitting device. The communication apparatus according to the present invention may also be provided with a receiver unit for receiving a speech signal transmitted from outside.

In this configuration, the light-emission control unit turns off the light-emitting device when the communication mode is the standby mode. The light-emission control unit turns on the light-emitting device when the communication mode is the transmission mode. Moreover, the light-emission control unit repeatedly turns on and off the light-emitting device when the communication mode is the transmission mode and when the speech signal to be transmitted has a good speech quality.

With the configuration described above, a user can feel that the communication apparatus is not responding to user's talking in an appropriate manner if the light-emitting device (LED) is turned on even when the user is talking into the communication apparatus while the user is pushing the PTT unit (the communication-mode switching unit). With the light-emitting device (LED), the communication apparatus can clearly notify a user who is talking into the communication apparatus that the transmission of a clear voice sound is not being performed.

It is preferable that the emission state (turn-on/-off) of the light-emitting device (LED) is the same between the case where the communication mode is the transmission mode and an input voice sound is not a speech segment and the case where the communication mode is the transmission mode and an input voice sound is a speech segment but the speech quality is not good. With this configuration, it is achieved to properly notify a user of whether a clear voice sound is being transmitted.

It is further understood by those skilled in the art that the foregoing description is a preferred embodiment of the disclosed device or method and that various changes and modifications may be made in the invention without departing from the spirit and scope thereof.

The light-emission control unit controls the light-emitting device (LED) in the following manner in the embodiments, however, the present invention is not limited thereto. In detail, in the embodiments, the light-emission control unit controls the light-emitting device (LED) in a manner to: repeatedly turn on and off the light-emitting device (LED) if the noise cancellation function is working effectively during a speech segment and if a voice sound now being transmitted has a good speech quality; turn on the light-emitting device (LED) if the noise cancellation function is working effectively during a speech segment, however, if a voice sound now being transmitted has a bad speech quality; and turn off the light-emitting device (LED) if no voice sound is being transmitted.

For example, different from the embodiments, the light-emission control unit may repeatedly turn on and off the light-emitting device (LED) if a voice sound now being transmitted has a bad speech quality. On the other hand, the light-emission control unit may turn on the light-emitting device (LED) if a voice sound now being transmitted has a good speech quality. Also in this modification, the light-emission control unit turns off the light-emitting device (LED) if no voice sound is being transmitted.

As described above, an audio input apparatus according to the present invention may be provided with a first sound pick-up unit, a second sound pick-up unit, a noise-cancellation processing unit for performing noise cancellation to a first speech signal input from the first sound pick-up unit by using a second speech signal input from the second sound pick-up unit, a speech-quality evaluation unit for evaluating the speech quality of a speech signal after the noise cancellation at the noise-cancellation processing unit, and an evaluation-result notification unit for notifying an evaluation result at the speech-quality evaluation unit.

In the audio input apparatus according to the present invention, the speech-quality evaluation unit may evaluate the speech quality of the speech signal after the noise cancellation based on whether the noise cancellation is working effectively. In this case, the speech-quality evaluation unit may determine that the speech quality of the speech signal after the noise cancellation is good if it is determined that the noise cancellation is working effectively as a result of comparison between the first speech signal before the noise cancellation and the speech signal after the noise cancellation and if average power of the speech signal after the noise cancellation is equal to or higher than a specific threshold level.

In the audio input apparatus according to the present invention, the speech-quality evaluation unit may compare the first speech signal before the noise cancellation and the speech signal after the noise cancellation to determine whether the noise cancellation is working effectively, thereby determining that the speech quality of the speech signal after the noise cancellation is good if it is determined that the noise cancellation is working effectively.

In the audio input apparatus according to the present invention, the speech-quality evaluation unit may determine that the speech quality of the speech signal after the noise cancellation is good if the difference between average power of the first speech signal before the noise cancellation and average power of the speech signal after the noise cancellation is equal to or higher than a specific threshold level.

In the audio input apparatus according to the present invention, the speech-quality evaluation unit may determine that the speech quality of the speech signal after the noise cancellation is good if a ratio of average power of the speech signal after the noise cancellation to average power of the first speech signal before the noise cancellation is equal to or lower than a specific threshold level.

In the audio input apparatus according to the present invention, the noise-cancellation processing unit may perform the noise cancellation by suppressing a noise component carried by the first speech signal input from the first sound pick-up unit based on the second speech signal input from the second sound pick-up unit. In this case, the noise-cancellation processing unit may perform the noise cancellation by generating a reversed-phase component of the noise component carried by the first speech signal input from the first sound pick-up unit based on the second speech signal input from the second sound pick-up unit and add the generated reversed-phase component to the first speech signal input from the first sound pick-up unit.

In the audio input apparatus according to the present invention, the evaluation-result notification unit may be provided with a light-emitting device for emitting light and a light-emission control unit for controlling the light-emitting device, wherein the evaluation-result notification unit notifies the evaluation result by turning on or repeatedly turning on

and off the light-emitting device based on the evaluation result at the speech-quality evaluation.

The audio input apparatus according to the present invention may further be provided with a speech-segment determination unit for determining whether or not the first speech signal input from the first sound pick-up unit is a speech segment, wherein the speech-quality evaluation unit evaluates the speech quality of the speech signal after the noise cancellation at the noise-cancellation processing unit while the speech-segment determination unit is determining that the first speech signal is the speech segment. In this case, the speech-segment determination unit may convert the first speech signal input from the first sound pick-up unit into a signal component in unit of a specific length in a frequency domain and analyzes a spectrum component of the signal component thus converted into the frequency domain to determine whether it is the speech segment based on the frequency component.

In the audio input apparatus according to the present invention, the first and sound pick-up units may be a main microphone and a sub-microphone, respectively, and the main microphone and the sub-microphone may be arranged at a front face and a rear face of the audio input apparatus, respectively. In this case, the audio input apparatus may further be provided with a microphone-direction determination unit for determining a direction of the main microphone based on a phase difference between the first and second speech signals output from the main microphone and the sub-microphone, respectively, wherein the speech-quality evaluation unit evaluates the speech quality of the speech signal after the noise cancellation at the noise-cancellation processing unit based on the direction of the main microphone determined by microphone-direction determination unit. The microphone-direction determination unit may detect the phase difference between the first and second speech signals output from the main microphone and the sub-microphone, respectively, to determine whether or not the phase difference is equal to or larger than a specific threshold value, wherein the speech-quality evaluation unit evaluates the speech quality of the speech signal after the noise cancellation at the noise-cancellation processing unit based on the determination at the microphone-direction determination unit.

Moreover, as described above, an audio input apparatus according to the present invention may be provided with a first sound pick-up unit, a second sound pick-up unit, a noise-cancellation processing unit for performing noise cancellation to a first speech signal input from the first sound pick-up unit by using a second speech signal input from the second sound pick-up unit, a speech-quality evaluation unit for evaluating the speech quality of a speech signal after the noise cancellation at the noise-cancellation processing unit, a transmitter unit for transmitting the speech signal after the noise cancellation, an evaluation-result notification unit for notifying an evaluation result at the speech-quality evaluation unit, a receiver unit for receiving a speech signal, and a sound emission unit for emitting a sound based on the speech signal received by the receiver unit.

The audio input apparatus according to the present invention may further be provided with a communication-mode switching unit for switching a communication mode into a transmission mode in which the transmitter transmits the speech signal after the noise cancellation, wherein the evaluation-result notification unit notifies that the speech quality of the speech signal after the noise cancellation is good while the communication mode is being switched into the transmission mode.

Furthermore, as described above, a condition notification method for an apparatus having at least a first microphone and a second microphone may be provided with the steps of picking up sounds at the first and second microphones, respectively, performing noise cancellation to the sound picked up at the first microphone by using the sound picked up at the second microphone, evaluating the speech quality of the sound after the noise cancellation, and notifying a condition of the apparatus based on a result of the evaluation.

Moreover, the processes and methods described above in the several embodiments can be achieved with a computer program stored in a storage medium such as a ROM of a main processor. A program that includes various commands for executing each of the processes and methods described above can be stored in various types of non-transitory computer readable media and installed in a computer. The non-transitory computer readable media include tangible storage media. The non-transitory computer readable media applicable in this invention include magnetic storage media such as a flexible disk, a magnetic tape, and a hard disk drive, magneto-optical storage media (such as a magneto-optical disk), CD-ROM (Read Only Memory), CD-R, CD-RW, semiconductor memories such as a mask ROM, PROM (Programmable ROM), EPROM (Erasable PROM), a flash memory, and RAM (Random Access Memory).

Moreover, a program that includes various commands for executing each of the processes and methods described above may be installed in a computer by using various types of transitory computer readable media that include an electric signal, an optical signal, and an electro-magnetic wave. The program can be installed in a computer by means of such a transitory computer readable medium through a wired communication channel such as a cable and an optical fiber or a wireless communication channel.

As described above in detail, the present invention can provide an audio input apparatus, a communication apparatus and a condition notification method that achieve transmission of clear voice sounds with an effective noise-cancellation function.

What is claimed is:

1. A condition notification method for notifying a used condition of a simplex communication apparatus by using a light-emitting device attached to the simplex communication apparatus, the method comprising:

a communication-mode determination step of determining whether a communication mode of the simplex communication apparatus is a transmission mode or a standby mode;

a sound pick-up state determination step of determining a sound pick-up state of a sound carried by a speech signal to be transmitted if the communication mode is the transmission mode;

a control step of controlling the light-emitting device so that the light-emitting device is turned off, turned on or repeatedly turned on and off based on determination results of the communication-mode determination step and the sound pick-up state determination step;

a speech-quality evaluation step of evaluating speech quality of the speech signal to be transmitted, wherein, in the sound pick-up state determination step, the sound pick-up state of the sound carried by the speech signal to be transmitted is determined if the communication mode is the transmission mode based on the speech quality of the speech signal evaluated by the speech-quality evaluation step; and

a speech-segment determination step of determining whether or not the speech signal to be transmitted is a

speech segment if the communication mode is the transmission mode, wherein, in the sound pick-up state determination step, the sound pick-up state of the sound carried by the speech signal to be transmitted, if the communication mode is the transmission mode, is determined based on a determination result of the speech-segment determination step and an evaluation result of the speech-quality evaluation step.

2. The condition notification method according to claim **1**, wherein, in the control step, the light-emitting device is turned on if the communication mode is the transmission mode whereas the light-emitting device is repeatedly turned on and off based on the sound pick-up state determined in the sound pick-up state determination step if the communication mode is the transmission mode.

3. The condition notification method according to claim **1**, wherein, in the speech-quality evaluation step, the speech quality of the speech signal to be transmitted is evaluated based on a volume level of a sound to be picked up.

4. The condition notification method according to claim **1** further comprising a noise cancellation step of performing noise cancellation to a first speech signal input from a first sound pick-up unit by using a second speech signal input from a second sound pick-up unit, the first and second sound pick-up units being provided for the simplex communication apparatus, wherein, speech quality of a speech signal after the noise cancellation is evaluated in the speech-quality evaluation step.

5. The condition notification method according to claim **1**, wherein in the speech-segment determination step it is determined whether or not the speech signal to be transmitted is a speech segment if the communication mode is the transmission mode, wherein, in the speech-quality evaluation step, the speech quality of the speech signal to be transmitted is evaluated while the speech signal to be transmitted is being determined as the speech segment.

6. The condition notification method according to claim **1** further comprising a microphone-direction determination step of determining a direction of a main microphone based on a phase difference of sounds picked up by a first sound pick-up unit and a second sound pick-up unit both provided for the simplex communication apparatus, the first sound pick-up unit including the main microphone, wherein, in the speech-quality evaluation step, the speech quality of the speech signal to be transmitted is evaluated based on the direction of the main microphone thus determined in the microphone-direction determination step.

7. The condition notification method according to claim **4**, wherein, in the control step, the light-emitting device is turned off if the communication mode is the standby mode, the light-emitting device is turned on if the communication mode is the transmission mode and if the speech signal to be transmitted is not the speech segment, the light-emitting device is turned on if the communication mode is the transmission mode and if the speech signal to be transmitted is the speech segment, and if the speech quality of the speech signal to be transmitted is evaluated as bad, and the light-emitting device is repeatedly turned on and off if the communication mode is the transmission mode and if the speech signal to be transmitted is the speech segment, and if the speech quality of the speech signal to be transmitted is evaluated as good.

8. The condition notification method according to claim **1**, wherein the speech-segment determination step includes:

a frequency conversion step of converting a signal input from a sound pick-up unit provided for the simplex communication apparatus into a signal component in unit of a specific length in a frequency domain; and

a sound determination step of determining whether the signal input from the sound pick-up unit carries a voice component or a noise component based on a spectrum component of the signal component thus converted into the frequency domain.

9. A communication apparatus comprising:

a first pick-up unit configured to pick up a voice sound;

a transmitter unit configured to transmit the voice sound picked up by the first pick-up unit to outside as a first speech signal;

a communication-mode switching unit configured to switch a communication mode between a standby mode in which the transmitter unit does not transmit the speech signal and a transmission mode in which the transmitter unit transmits the speech signal;

a sound pick-up state determination unit configured to determine a pick-up state of the voice sound picked up by the first pick-up unit;

a light emission device configured to emit light;

a control unit configured to control the light-emitting device so that the light-emitting device is turned off, turned on or repeatedly turned on and off based on the communication mode switched by the communication-mode switching unit, and the pick-up state of the voice sound picked up by the first pick-up unit and determined by the sound pick-up state determination unit;

a speech-quality evaluation unit configured to evaluate speech quality of the first speech signal to be transmitted by the transmitter unit, wherein the sound pick-up state determination unit determines the sound pick-up state of the voice sound picked up by the first sound pick-up unit based on the speech quality of the speech signal evaluated by the speech-quality evaluation unit; and

a speech-segment determination unit configured to determine whether or not the first speech signal to be transmitted by the transmitter unit is a speech segment, wherein, the sound pick-up state determination unit determines the sound pick-up state of the sound to be transmitted as the first speech signal based on a determination result at the speech-segment determination unit and an evaluation result at the speech-quality evaluation unit.

10. The communication apparatus according to claim **9**, wherein the light-emitting device is turned on if the communication mode is switched into the transmission mode whereas the light-emitting device is repeatedly turned on and off based on the pick-up state determined by the sound pick-up state determination unit if the communication mode is switched into the transmission mode.

11. The communication apparatus according to claim **9** further comprising:

a second sound pick-up unit configured to pick up a voice sound;

a noise cancellation unit configured to perform noise cancellation to the first speech signal input from the first sound pick-up unit by using a second speech signal input from the second sound pick-up unit,

wherein the transmitter unit transmits a speech signal after the noise cancellation by the noise cancellation unit and the speech-quality evaluation unit evaluates speech quality of the speech signal after the noise cancellation.

12. The communication apparatus according to claim **11** further comprising a microphone-direction determination unit configured to determine a direction of a main microphone based on a phase difference of the voice sounds picked up the first and second sound pick-up units, respectively, the first sound pick-up unit including the main microphone,

wherein, the speech-quality evaluation unit evaluates the speech quality of the speech signal to be transmitted by the transmitter unit based on the direction of the main microphone thus determined by the microphone-direction determination unit.

13. The communication apparatus according to claim **9**, wherein the control unit controls the light-emitting device so that the light-emitting device is turned off if the communication mode is the standby mode, the light-emitting device is turned on if the communication mode is the transmission mode and if the speech signal to be transmitted is not the speech segment, the light-emitting device is turned on if the communication mode is the transmission mode, if the speech signal to be transmitted is the speech segment, and if the speech quality of the speech signal to be transmitted is evaluated as bad, and the light-emitting device is repeatedly turned on and off if the communication mode is the transmission mode, if the speech signal to be transmitted is the speech segment, and if the speech quality of the speech signal to be transmitted is evaluated as good.

14. The communication apparatus according to claim **11**, wherein the first and second sound pick-up units are a main microphone and a sub-microphone, respectively, and the main microphone and the sub-microphone are arranged at a front face and a rear face of the communication apparatus, respectively.

15. The communication apparatus according to claim **9**, wherein the speech-segment determination unit converts the first signal input from the first sound pick-up unit into a signal component in unit of a specific length in a frequency domain and determines whether the first signal carries a voice component or a noise component based on a spectrum component of the signal component thus converted into the frequency domain.

* * * * *