Trials@uspto.gov
571-272-7822

Paper 87
Date: January 9, 2020

UNITED STATES PATENT AND TRADEMARK OFFICE _____

BEFORE THE PATENT TRIAL AND APPEAL BOARD

_____

GOOGLE LLC, ZTE (USA), INC.,
SAMSUNG ELECTRONICS CO., LTD.,
LG ELECTRONICS INC., HUAWEI DEVICE USA, INC.,
HUAWEI DEVICE CO. LTD., HUAWEI TECHNOLOGIES CO. LTD.,
HUAWEI DEVICE (DONGGUAN) CO. LTD.,
HUAWEI INVESTMENT & HOLDING CO. LTD.,
HUAWEI TECH. INVESTMENT CO. LTD., and
HUAWEI DEVICE (HONG KONG) CO. LTD.,
Petitioner,

v.

CYWEE GROUP LTD.,
Patent Owner.

_____

IPR2018-01257
Patent 8,552,978 B2

_____

Before PATRICK M. BOUCHER, KAMRAN JIVANI, and
CHRISTOPHER L. OGDEN, *Administrative Patent Judges*.

BOUCHER, *Administrative Patent Judge*.

JUDGMENT
Final Written Decision
Determining All Challenged Claims Unpatentable
Denying Patent Owner's Motion to Amend
Denying Patent Owner's First and Second Motions to Terminate
35 U.S.C. § 318(a)

In response to a Petition (Paper 1, "Pet.") filed by Google LLC ("Google" or "Petitioner"[1]), we instituted an *inter partes* review of claims 10 and 12 of U.S. Patent No. 8,552,978 B2 (Ex. 1001, "the '978 patent"). Paper 8 ("Dec."). We subsequently joined (1) ZTE (USA), Inc. ("ZTE"), (2) Samsung Electronics Co., Ltd. ("Samsung"), (3) LG Electronics Inc. ("LG"), and (4) Huawei Device USA, Inc., Huawei Device Co. Ltd., Huawei Technologies Co. Ltd., Huawei Device (Dongguan) Co. Ltd., Huawei Investment & Holding Co. Ltd., Huawei Tech. Investment Co. Ltd., and Huawei Device (Hong Kong) Co. Ltd. (collectively, "Huawei") as parties to this proceeding. Papers 35–38.

During the trial, CyWee Group Ltd. ("Patent Owner") filed a Response (Paper 14, "PO Resp.") to which Petitioner filed a Reply (Paper 28, "Reply") and Patent Owner filed a Sur-reply (Paper 48, "Sur-reply"). Patent Owner also filed a Motion to Amend the claims of the '978 patent. Paper 15 ("Mot. Amend"). Petitioner opposed Patent Owner's Motion to Amend (Paper 29, "Opp. Amend"), Patent Owner replied (Paper 46, "Reply Amend"), and Petitioner sur-replied (Paper 64, "Sur-reply Amend"). In

[1] As noted, additional parties were joined to this proceeding during the trial. Because those joined parties participated in an "understudy" role, we refer interchangeably to Google LLC or to the entire group of petitioner parties as "Petitioner" without distinction unless identification of a particular petitioner is relevant.

addition, Patent Owner filed a First Motion to Terminate this proceeding based on Petitioner's alleged failure to identify all real parties in interest and/or privies. Paper 40 ("Mot. Term."). Petitioner opposed Patent Owner's Motion to Terminate (Paper 51, "Opp. Term."), Patent Owner replied (Paper 65, "Reply Term."), and Petitioner sur-replied (Paper 72, "Sur-reply Term.").[2] Subsequent to the Federal Circuit's decision in *Arthrex, Inc. v. Smith & Nephew, Inc.*, 941 F.3d 1320 (Fed. Cir. 2019), we authorized Patent Owner's request to file a Second Motion to Terminate to preserve Patent Owner's positions related to the Constitutional concerns raised by that decision. Paper 82[3] (Second Mot. Term.). To this, Petitioner filed an opposition. Paper 86. An oral hearing was held with the parties, and a copy of the transcript was entered into the record. Paper 73 ("Tr.").

We have jurisdiction under 35 U.S.C. § 6. This Decision is a Final Written Decision under 35 U.S.C. § 318(a) as to the patentability of the claims on which we instituted trial. Based on the record before us, Petitioner has shown, by a preponderance of the evidence, that (1) the Petition is not barred by 35 U.S.C. §§ 312(a)(2) or 315(b), as alleged by Patent Owner in its First Motion to Terminate; (2) claims 10 and 12 of the '978 patent are unpatentable; and (3) Patent Owner's proposed amended claims are unpatentable. We also deny Patent Owner's Second Motion to Terminate for the reasons discussed below.

---

[2] Papers 51 and 65 are filed under seal. Publicly available, redacted versions of those papers are available in the record as Papers 52 and 66 respectively.
[3] Paper 82 is filed under seal. A publicly available, redacted version of Patent Owner's second Motion to Terminate is available in the record as Paper 83.

I. BACKGROUND

A. The ’978 Patent

The ’978 patent “generally relates to a 3D pointing device,” which is described as having the function of “detecting motions of the device and translating the detected motions to a cursor display such as a cursor pointing on the screen . . . of a 2D display device.” Ex. 1001, 1:22–23, 1:29–33. For example, the pointing device “may be a mouse of a computer or a pad of a video game console” and the display device “may be a part of the computer or the video game console.” *Id.* at 1:36–39. A user may then perform control actions and movements with the pointing device for some purpose, such as playing a video game. *Id.* at 1:52–55. For example, when the user moves the pointing device, a pointer on the display device may “move along with the orientation, direction and distance travelled by the pointing device.” *Id.* at 1:56–61.

Figure 3 of the ’978 patent is reproduced below.

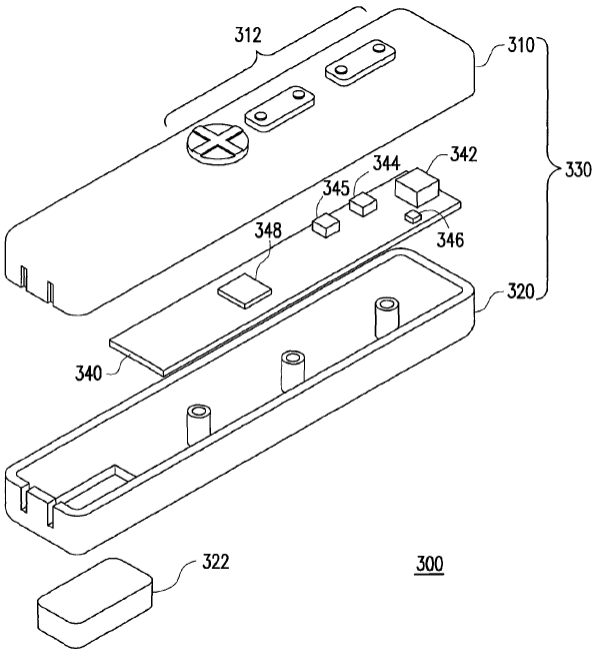

FIG. 3

Figure 3 is an exploded diagram showing electronic device 300, which may correspond to a pointing device. *Id.* at 9:14–16. Within housing 330, formed of top cover 310 and bottom cover 320, are rotation sensor 342, accelerometer 344, and magnetometer 345, each attached to printed circuit board 340, as well as other components that allow data transmission and processing. *Id.* at 9:26–33.

The ’978 patent refers to rotation sensor 342, accelerometer 344, and magnetometer 345 as “a nine-axis motion sensor module.” *Id.* at 9:57–62. The term “nine-axis” refers to and includes three angular velocities ω_x, ω_y, ω_z detected by rotation sensor 342, three axial accelerations Ax, Ay, Az detected by accelerometer 344, and three “magnetisms” Mx, My, Mz detected by magnetometer 345. *Id.* at 9:65–10:23. The *x*, *y*, and *z* components are illustrated in the patent for a Cartesian spatial reference frame relative to electronic device 300, but, more generally, “may not need to be orthogonal in a specific orientation and they may be rotated in different orientations.” *Id.* at 10:23–29.

Various dynamic environments may present external influences that impact the ability to calculate orientation accurately. *See id.* at 15:53–16:4. For example, nongravitational forces may cause undesirable axial accelerations and/or extraneous electromagnetic fields may cause undesirable magnetism. *Id.* at 15:55–60. Such complications are addressed with a method illustrated by the flow diagram shown in Figure 7 of the ’978 patent, reproduced below.

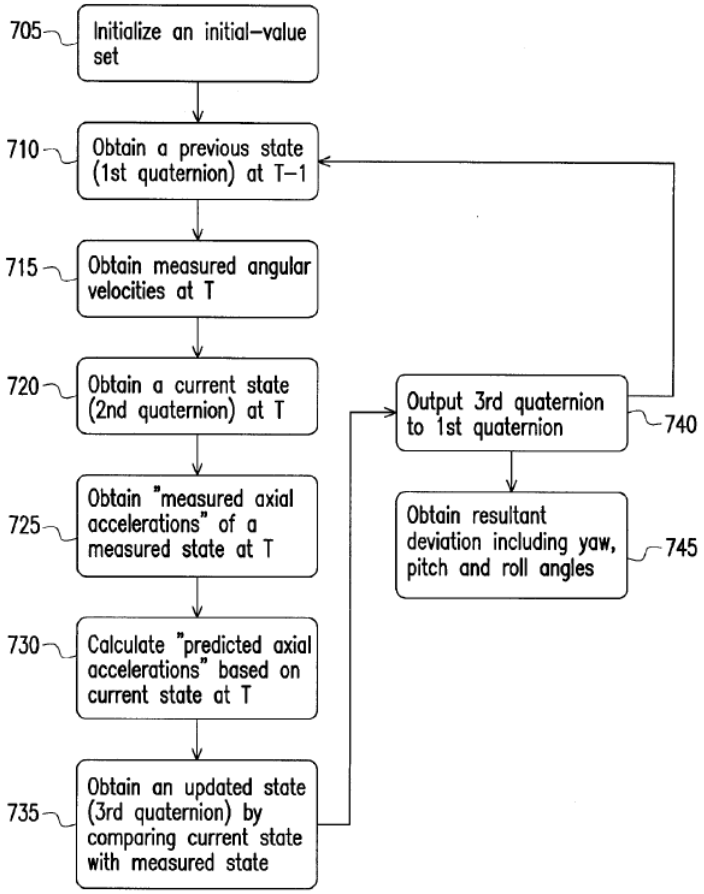

FIG. 7

Figure 7 shows a method "for obtaining and/or outputting a resultant deviation including deviation angles in a spatial reference frame of an electronic device." *Id.* at 13:60–63. The method of Figure 7 uses quaternions, which Petitioner's declarant, Majid Sarrafzadeh, Ph.D., explains are four-valued vector generalizations of complex numbers with "special mathematical properties that allow them to describe rotations efficiently." Ex. 1002 ¶¶ 30–31.

After obtaining a previous state of the nine-axis sensor module at steps 705 and 710, the method obtains measured angular velocities ω_x, ω_y, ω_z from the motion sensor signals of the nine-axis motion sensor module at a

current time, at steps 715 and 720. Ex. 1001, 14:23–43. A current-time measured state of the nine-axis motion sensor module is then obtained by obtaining measured axial accelerations Ax, Ay, Az at step 725; and predicted axial accelerations Ax′, Ay′, Az′ based on measured angular velocities ω_x, ω_y, ω_z are calculated at step 730. *Id.* at 14:43–51. This allows obtaining an updated state of the nine-axis motion sensor module at step 735 by comparing the current state with the measured state. *Id.* at 14:51–54. "[T]o provide a continuous loop," the updated state of the nine-axis motion sensor module is output to the previous state at step 740, i.e., by outputting the third quaternion obtained at step 735 to the first quaternion identified at step 710 for the previous state. *Id.* at 14:62–15:3. Ultimately, the resultant deviation is obtained at step 745, "whereby the resultant deviation compris[es] deviation angles associated with the updated state of the nine-axis motion module[,] excluding said undesirable external interferences in the dynamic environments." *Id.* at 14:54–62.

B. Challenged Claims

Challenged claims 10 and 12 are reproduced below.

> 10. A method for compensating rotations of a 3D pointing device, comprising:
>
> generating an orientation output associated with an orientation of the 3D pointing device associated with three coordinate axes of a global reference frame associated with Earth;
>
> generatin[g] a first signal set comprising axial accelerations associated with movements and rotations of the 3D pointing device in the spatial reference frame;
>
> generating a second signal set associated with Earth's magnetism; generating the orientation output based on the first

> signal set, the second signal set and the rotation output or based on the first signal set and the second signal set;
>
> generating a rotation output associated with a rotation of the 3D pointing device associated with three coordinate axes of a spatial reference frame associated with the 3D pointing device; and
>
> using the orientation output and the rotation output to generate a transformed output associated with a fixed reference frame associated with a display device, wherein the orientation output and the rotation output is generated by a nine-axis motion sensor module; obtaining one or more resultant deviation including a plurality of deviation angles using a plurality of measured magnetisms Mx, My, Mz and a plurality of predicted magnetism Mx′, My′, Mz′ for the second signal set.

Ex. 1001, 36:62–37:21.

> 12. The method of claim 10, wherein the orientation output is a rotation matrix, a quaternion, a rotation vector, or comprises three orientation angles.

Id. at 37:36–38.

C. Evidence

Petitioner relies on the following references:

Bachmann	US 7,089,148 B1	Aug. 8, 2006	Ex. 1004
Zhang	US 2004/0095317 A1	May 20, 2004	Ex. 1005
Liberty	US 7,158,118 B2	Jan. 2, 2007	Ex. 1006

In addition, Petitioner relies on Declarations by Majid Sarrafzadeh, Ph.D., Exs. 1002, 1018, 1044, and by Collin W. Park, Ex. 1038. Dr. Sarrafzadeh was cross-examined by Patent Owner, and a transcript of his deposition was entered into the record. Ex. 2033. Mr. Park was cross-

examined by Patent Owner, and a transcript of his deposition was entered into the record. Ex. 2045.[4]

Patent Owner relies on Declarations by Joseph LaViola, Ph.D., Exs. 2004, 2011, 2032, and by Shun-Nan Liou, Ex. 2020. Dr. LaViola was twice cross-examined by Petitioner, and transcripts of his depositions were entered into the record. Exs. 1019, 1043.[5] No cross-examination testimony of Mr. Liou was entered into the record.[6]

D. Asserted Grounds of Unpatentability

Petitioner challenges claims 10 and 12 on the following grounds. Pet. 7.

Claims Challenged	35 U.S.C. §	References
10, 12	103(a)[7]	Zhang, Bachmann
10, 12	103(a)	Liberty, Bachmann

[4] Exhibit 2045 is filed under seal. A redacted copy of this exhibit is available in the record as Exhibit 1049.
[5] Exhibit 1043 is filed under seal. A redacted copy of this exhibit is available in the record as Exhibit 1048.
[6] In the preliminary phase of this proceeding, Patent Owner relied on a Declaration by Gary L. Blank, Ph.D. Ex. 2001. After institution of the trial, Patent Owner expressly withdrew Dr. Blank's testimony. Paper 18.
[7] The Leahy-Smith America Invents Act ("AIA") included revisions to 35 U.S.C. § 103 that became effective on March 16, 2013. Because the '978 patent issued from an application filed before March 16, 2013, we apply the pre-AIA versions of the statutory bases for unpatentability.

E. Real Parties in Interest

ZTE identifies ZTE Corporation as a real party in interest, Paper 35, 8; Samsung identifies Samsung Electronics America, Inc., as a real party in interest, Paper 36, 8; and LG identifies LG Electronics U.S.A., Inc., as a real party in interest, Paper 37, 8. In addition, LG further notes that LG Electronics Mobile Comm U.S.A., Inc. "merged into and is now a part of LG Electronics U.S.A." Paper 37, 8.

We elaborate on the factual history regarding the identification of real parties in interest below in discussing Patent Owner's First Motion to Terminate.

F. Related Matters

The parties identify the following matters as involving the '978 patent: (1) *CyWee Group Ltd. v. Google, Inc.*, No. 1:18-cv-00571 (D. Del.); (2) *CyWee Group Ltd. v. ZTE Corporation*, No. 3:17-cv-02130 (S.D. Cal.); (3) *CyWee Group Ltd. v. HTC Corporation*, No. 2:17-cv-00932 (W.D. Wash.); (4) *CyWee Group Ltd. v. Motorola Mobility LLC*, No. 1:17-cv-00780 (D. Del.); (5) *CyWee Group Ltd. v. Huawei Technologies Co., Inc.*, No. 2:17-cv-00495 (E.D. Tex.); (6) *CyWee Group Ltd. v. LG Electronics, Inc.*, No. 3:17-cv-01102 (S.D. Cal.); and (7) *CyWee Group Ltd. v. Samsung Electronics Co. Ltd.*, No. 2:17-cv-00140 (E.D. Tex.). Pet. 5–6; Paper 6, 2–3. In addition, Petitioner identifies *CyWee Group Ltd. v. Apple Inc.*, No. 4:14-cv-01853 (N.D. Cal.) as involving the '978 patent. Pet. 6.

Patent Owner also identifies IPR2018-01258 as related to this proceeding in that the subject patent of that proceeding, U.S. Patent No.

8,441,438 B2 ("the '438 patent"), is related to the '978 patent. Paper 6, 3. The '438 patent is also the subject of IPR2019-00143.

II. FIRST MOTION TO TERMINATE: REAL PARTIES IN INTEREST AND PRIVIES

Patent Owner alleges that LG, Samsung, and ZTE were real parties in interest at the time Google filed its Petition, and that Google failed to identify those parties as such, as required by 35 U.S.C. § 312(a)(2). Mot. Term. 1. Moreover, Patent Owner alleges that, because it served an infringement complaint on LG and Samsung more than a year prior to the filing of Google's Petition, and because LG and Samsung are both real parties in interest and Google's privies, the Petition is time-barred under 35 U.S.C. § 315(b). *See id.* Patent Owner therefore moves that we terminate this *inter partes* review. *See id.* For the reasons that follow, we deny the motion.

A. Background

Google leads an open-source project associated with the Android operating system. *See* Ex. 1030, 1. According to Google publications, Android is open-source software, which is available royalty-free to anyone, and anyone may modify or customize it, including Android competitors. *See* Ex. 2016, 2; Ex. 1030, 1; Ex. 1031; Ex. 1032, 1; Ex. 1033, 2. Associated with the operating system is the Android Networked Cross-License ("PAX"), whose members include Google, Samsung, and LG. Ex. 1035; *see also* Mot. Term. 4 (citing Ex. 2016); Opp. Term. 5. According to its website, PAX is "free to join and open to anyone," and "covers Android and

Google Applications preinstalled on devices that meet Android's compatibility requirements." Ex. 1035, 1; *accord* Opp. Term. 5. Google has also entered into a number of Mobile Application Distribution Agreements ("MADAs") with parties that include at least Samsung[redacted]. Exs. 2014, 2019, 2051, 2053. Other Android-related agreements, which Google made with at least [redacted] include an [redacted] (Ex. 2050), an [redacted] (Ex. 2052), a [redacted] (Ex. 2054), and an [redacted] (Ex. 2055).

Before Google filed its Petition, Patent Owner had served complaints on Petitioner parties, alleging infringement of the '978 patent, as follows: (1) Samsung on February 23, 2017; (2) LG on June 7, 2017; (3) Huawei on June 14, 2017; (4) ZTE on November 1, 2017; and (5) Google on April 18, 2018. Mot. Term. 3; Mot. Opp. 2. Patent Owner represents that the Android operating system is "a major component" of its infringement contentions for each of these cases. Mot. Term. 3 (citing Ex. 2015 (infringement contentions for a Samsung product)). Petitioner does not specifically dispute this representation, and we accept it as accurate for the purpose of this decision. *See* Opp. Term. 3 (acknowledging Patent Owner has alleged that the Android operating system runs on the accused LG, Samsung, and ZTE devices). Google is also a party to a [redacted] to which [redacted]. *See* Ex. 2056.

On June 14, 2018, the one-year anniversary of the date Patent Owner served its complaint against Huawei, and more than a year after Patent Owner served the complaints on Samsung and LG, Google filed its Petition

for *inter partes* review, naming only itself and Huawei as real parties in interest. Pet. 5. According to Google, it included Huawei as a real party in interest, in part, because Huawei "was involved in Google's IPR petitions prior to filing." Sur-reply Term. 2. Successively on January 8, 10, and 11 of 2019, Samsung, ZTE, and Huawei each filed a petition for *inter partes* review with a concurrent motion for joinder. *See Samsung Electronics Co., Ltd. v. CyWee Group Ltd.*, IPR2019-00534, Papers 1, 3; *ZTE (USA), Inc. v. CyWee Group Ltd.*, IPR2019-00525, Papers 2, 3; *Huawei Device USA, Inc. v. CyWee Group Ltd.*, IPR2019-00563, Papers 1, 3. In each of these petitions, the filing party named only itself and closely related corporate entities as the real parties in interest. *See* IPR2019-00534, Paper 1 at 1; IPR2019-00525, Paper 2 at 5; IPR2019-00563, Paper 1 at 2.

LG filed a similar petition and motion for joinder on January 10, 2019. *LG Electronics Inc. v. CyWee Group Ltd.*, IPR2019-00560, Papers 1 and 2. LG's petition named itself as a real party in interest, and "further identifie[d] as real-parties-in-interest the parties identified in IPR2018-01257 (to which this petition seeks joinder): Google LLC, Huawei Device USA, Inc., Huawei Device Co. Ltd., Huawei Technologies Co. Ltd., Huawei Device (Dongguan) Co. Ltd., Huawei Investment & Holding Co. Ltd., Huawei Tech. Investment Co. Ltd., Huawei Device (Hong Kong) Co. Ltd." IPR2019-00560, Paper 1 at 3. Similarly, on June 15, 2019, when LG sought joinder to IPR2019-00143 (i.e., a proceeding involving the related '438 patent), its petition identified itself as a real party in interest, and "further identifie[d] as real-parties-in-interest the parties identified in IPR2019-00143 (to which the petition seeks joinder): ZTE (USA). Inc. and ZTE

Corporation." *LG Electronics Inc. v. CyWee Group Ltd.*, IPR2019-01203, Paper 2 at 1.

On May 21, 2019, Patent Owner filed a Motion for Additional Discovery (Paper 24), seeking documents relating to Google's alleged "failure to name all Real Parties in Interest to its Petition (Paper 1) in the present IPR, including at least Samsung . . . , LG . . . , and ZTE." Paper 24, 1. In denying this motion, we weighed the factors set forth in *Garmin International, Inc. v. Cuozzo Speed Technologies, LLC*, IPR2012-00001, Paper 26 at 6–7 (PTAB Mar. 5, 2013) (precedential), and found that Patent Owner had not met its burden to show, as required under 37 C.F.R. § 42.51(b)(2)(i), that the requested additional discovery was "in the interests of justice." Paper 30, 5–10. In particular, we found that the fourth and fifth *Garmin* factors (understandability of instructions and degree of burden to answer) weighed heavily against Patent Owner, and that the request was untimely. *Id.* at 8–10.

Nevertheless, in the related IPR2019-00143 *inter partes* review, involving ZTE's separate challenge to the related '438 patent, the Board authorized Patent Owner's motion for additional discovery based on a more narrowly tailored set of discovery requests than those rejected in the instant trial. IPR2019-00143, Paper 20 at 11. In the present case, after the end of briefing, and after Patent Owner had argued the motion during the oral hearing, we authorized Patent Owner to submit additional evidence supporting the Motion to Terminate. *See* Papers 74, 75. Accordingly, Patent Owner submitted documents on November 7, 2019 that we discuss below, along with a statement identifying the relevant portions of those

documents. *See* Paper 76[8], Exs. 2049–2056. Petitioner filed objections to this submission on November 14, 2019. Paper 78.

B. Analysis

Under 35 U.S.C. § 315(b), we may not institute an *inter partes* review "if the petition requesting the proceeding [wa]s filed more than 1 year after the date on which the petitioner, real party in interest, or privy of the petitioner [wa]s served with a complaint alleging infringement of the patent." Patent Owner served complaints on Samsung and LG more than a year prior to June 14, 2018, when Google filed its Petition for *inter partes* review. *See* Mot. Term 3; Mot. Opp. 2. Thus, if we were to determine that either Samsung or LG is a real party in interest or privy of Google, the Petition would be untimely. Patent Owner argues that LG is a real party in interest by LG's own admission, and that Google has failed to meet its burden to show that LG and Samsung are not real parties in interest or privies. *See* Mot. Term. 6, 9–15.

Patent Owner also argues that Google has not met its burden to show that it has correctly identified all real parties in interest in the Petition. *Id.* at 6, 10–15; 35 U.S.C. § 312(a)(2) ("A petition . . . may be considered only if . . . the petition identifies all real parties in interest."). In Patent Owner's view, Google's Petition failed to correctly name LG, Samsung, and ZTE as real parties in interest under § 312(a)(2). *See* Mot. Term. 1.

Google bears the burden of persuasion to demonstrate that its Petition is not time-barred under § 315(b) based on any complaint served on a real

[8] Paper 76 is filed under seal. A redacted copy of this paper is available in the record as Paper 77.

party in interest or privy more than a year earlier. *Ventex Co., Ltd. v. Columbia Sportswear N.A., Inc.*, IPR2017-00651, Paper 152 at 4–5 (PTAB Jan. 24, 2019) (precedential) (citing *Worlds Inc. v. Bungie, Inc.*, 903 F.3d 1237, 1242 (Fed. Cir. 2018)). By the same logic, the burden of persuasion is on Google to show that it has identified accurately the real parties in interest for the purpose of complying with § 312(a)(2). *Cf. Worlds*, 903 F.3d at 1242–43 ("[A]n IPR petitioner will usually be in a better position, at least relative to the patent owner, to access evidence relevant to the real-party-in-interest inquiry.").

By a preponderance of the evidence on this record, Google has met its burden of showing that LG, Samsung, and ZTE are not real parties in interest, and that LG and Samsung are not privies, for the reasons discussed below. Because the real-party-in-interest issue is distinct from that of privity, we address the two questions separately. *See Ventex*, Paper 152 at 5.

1. Real Party in Interest

Whether a non-party is a real party in interest is a "highly fact-dependent question." *Ventex*, Paper 152 at 6 (quoting Trial Practice Guide, 77 Fed. Reg. 48,756, 48,759 (Aug. 14, 2012); *see also* Patent Trial and Appeal Board Consolidated Trial Practice Guide 13 (Nov. 2019), *available at* https://go.usa.gov/xpvPF ("Whether a party who is not a named participant in a given proceeding nonetheless constitutes a 'real party-in-interest' or 'privy' to that proceeding is a highly fact-dependent question.")). The question "demands a flexible approach that takes into account both equitable and practical considerations, with an eye toward determining whether the non-party is a clear beneficiary that has a preexisting,

established relationship with the petitioner." *Applications in Internet Time, LLC v. RPX Corp.*, 897 F.3d 1336, 1351 (Fed. Cir. 2018). Two questions lying at the heart of this analysis are "whether a non-party 'desires review of the patent' and whether the petition has been filed at a nonparty's 'behest.'" *Id.* at 1351 (citing Trial Practice Guide, 77 Fed. Reg. at 48,759). We ask "who, from a 'practical and equitable' standpoint, will benefit from the redress" that the *inter partes* review might provide. *Id.* at 1349. In addition, we "inquire whether [the petitioner] can be said to be representing [the non-party's] interest." *Id.* at 1353; *see also Ventex*, Paper 152, 8 (determining that Serius was a real party in interest, in part because the petitioner "Ventex represents Serius's interests in this proceeding").

Relevant considerations include, without limitation, (1) "whether the non-party exercised or could have exercised control over the proceeding"; (2) the non-party's relationship with the petitioner; (3) whether the non-party funded the proceeding; (4) the non-party's relationship with the petition itself, including the nature and/or degree of involvement in the filing; and (5) the nature of the entity filing the petition. Trial Practice Guide, 77 Fed. Reg. at 48,759–60. Patent Owner alleges that Google has a preexisting, established relationship with LG, Samsung, and ZTE (whom, collectively with Huawei, Patent Owner calls the "Android Defendants"), such that they are real parties in interest. Mot. Term. 1–2, 9–12.

In particular, Patent Owner raises the following as evidence: (a) LG's statements in related LG petitions that Patent Owner alleges are admissions that LG is a real party in interest; (b) LG's manufacture of a phone for Google; (c) Google's supply of the Android operating system to LG, Samsung, and ZTE; (d) the PAX license; (e) Google's MADA with

Samsung; (f) Google's reliance on a Samsung phone for a trademark registration; (g) Patent Owner's Supplemental Submission, filed after the oral hearing; and (h) Google's participation with LG, Samsung, and ZTE in prior district court litigation. We address these issues, in turn, in the sections below. Then we weigh the evidence as a whole, concluding that the evidence establishes that LG, Samsung, and ZTE are not real parties in interest to this proceeding.

a. LG's Statements in Related LG Petitions

Patent Owner argues that LG's statements in its petitions in IPR2019-00560 and IPR2019-01203 "are alone sufficient to prove that Google should have named LG as [a real party in interest] in its Petition." Mot. Term. 9. In each of these petitions, LG identified LG Electronics Inc. ("LGE") and LG Electronics U.S.A., Inc. ("LGEUS") as "[t]he real-parties-in-interest," and then "further identifie[d] as real-parties-in-interest the parties identified in" the IPR2018-01257 (i.e., this proceeding) and IPR2019-00143 cases, "to which the petition seeks joinder." IPR2019-00560, Paper 1, 3; IPR2019-01203, Paper 2 at 1.[9] According to Patent Owner, "[i]t is impossible under [*Applications in Internet Time*] for LG to not be at least [a real party in interest] to Google's Petition when Google is admittedly [a real party in interest] to LG's identical joinder petition." Reply Term. 1.

[9] Patent Owner also cites to a similar statement in IPR2019-00559, in which LG sought to join related proceeding IPR2019-01258. Mot. Term. 3 (citing IPR2019-00559, Paper 1 at 5).

We do not agree that LG's statements suggest LG was a real party in interest with respect to Google's Petition. LG's statements specify the real party in interest for LG's petitions, and then, in a separate sentence, include the real parties in interest of the petition to be joined. Thus, by their structure and wording, LG's statements indicate that LG included Google, Huawei, and ZTE in the respective petitions because these parties were listed as real parties in interest in the petitions to which LG sought to be joined, and would be real parties in interest in the combined proceeding. Furthermore, LG's statement in the IPR2019-01203 petition does not list Google as a real party in interest at all. So even if LG believed that ZTE were a real party in interest to the IPR2019-01203 petition, this has no direct bearing on LG's relationship with Google.

The other evidence on this record is consistent with our facial interpretation of LG's statements. LG's lead counsel, Collin W. Park, testified that LG identified the additional entities "solely because those entities had already been identified as [real parties in interest] in the [Google or ZTE] IPRs, to which the [IPR2019-00560 and IPR2019-01203 petitions] sought to be joined, and for no other reason." Ex. 1038 ¶¶ 7, 10. Mr. Park also stated that no party other than LG "financed or controlled in any way the preparation and filing" of the IPR2019-00559 and IPR2019-01203 petitions. *Id.* ¶¶ 6, 9.

Patent Owner alleges that Mr. Park's declaration is not competent or credible, and thus deserves no weight. Reply Term. 4–5. According to Patent Owner, Mr. Park testified during his deposition that he had not read *Applications in Internet Time*. *Id.* at 4 (citing Ex. 2045, 191:3–14). Patent Owner also alleges that Mr. Park "admitted that he conducted no

investigation to identify [real parties in interest or privies], despite a legal obligation to do so." *Id.* at 5 (citing Ex. 2045, 96:14–101:15, 116:8–119:1).[10] But neither this, if true, nor Mr. Park's admission that he had not read *Applications in Internet Time*, would contradict or significantly call into question Mr. Park's testimony as to the subjective reason why LG included Google, Huawei, and ZTE as real parties in interest in the IPR2019-00560 and IPR2019-01203 petitions. In light of the evidence of record, we find Mr. Park's testimony credible on the issue of LG's subjective intent.

Therefore, for the above reasons, we determine that LG's statements in the related inter *partes review* petitions do not suggest that LG is a real party in interest to this *inter partes* review.

b. LG's Manufacture of the Pixel 2 XL for Google

Patent Owner argues that LG is a real party in interest because "[a]ccording to its FCC filings, LG manufactures the Pixel 2 XL for Google, *see* Ex. 2048 [PCTest Engineering Laboratory photographs of Google Pixel 2 XL phone], one of the four Google devices CyWee accused in its district court complaint against Google." Reply Term. 4 (citing Ex. 1026 ¶¶ 38, 91–107).

[10] Although we assume this allegation is correct for the purpose of our decision, we find no such admission in the cited passages of Mr. Park's deposition transcript. We understand that when counsel for Patent Owner asked Mr. Park what steps he took to investigate the identity of real parties in interest prior to filing the IPR2019-00560 and IPR2019-01203 petitions, Mr. Park did not answer, asserting attorney work product protection. Ex. 2045, 96:14–103:3, 116:8–119:1.

Although Patent Owner raised this argument for the first time in its supporting Reply, we consider the issue because Petitioner responded substantively in the Sur-reply without objection. *See* Sur-reply Term 2. Petitioner does not contest that LG manufactures Google's Pixel 2 XL phone. *See id.* But Petitioner points to Mr. Park's testimony stating that, to his knowledge as LG's lead counsel, LG is [redacted]" *Id.* (citing Ex. 1049, 238:6–11). Petitioner also characterizes this manufacturing arrangement with LG as "an arm's length commercial transaction." Tr. 92:22; *see also* Sur-reply Term. 2. The evidence of record supports Petitioner's characterization.

Google's relationship with LG with respect to the Pixel 2 XL is different from that, in *Ventex*, of petitioner Ventex and non-party Serius. There, the Board held that Ventex represented the interests of Serius in the proceeding, in part because Ventex sold accused products exclusively to Serius, and had agreed to indemnify Serius for patent infringement. *See Ventex*, Paper 152 at 7–8. Here, by contrast, LG does not have an exclusive arrangement with Google for the sale of smart phones that LG manufactures. *See* Ex. 1027 ¶¶ 48, 212 (a complaint by Patent Owner accusing LG of making and selling LG-branded phones). Similarly, LG is not Google's only source of smart phones. *See* Reply Term. 4 (acknowledging that Huawei manufactures the Nexus 6P phone for Google). Indeed, Petitioner provides credible evidence that LG phones compete against Google's Pixel 2 XL in the smartphone market. *See* Opp. Term. 3 (citing Exs. 1036, 1037 (phoneArena.com's graphical lists of smartphone manufacturers and Google

Pixel 2's "[r]ivals")). In addition, we find Petitioner's evidence credible that [redacted] by the Pixel 2 XL phone. Sur-reply Term. 2 (citing Ex. 1049, 238:6–11). There is also no evidence on this record that Google indemnifies LG for the Pixel 2 XL.

Further, the evidence on this record does not suggest that Patent Owner's lawsuit against Google, and Google's subsequent Petition, had any practical connection to LG's interests regarding the Pixel 2 XL. Even though LG was the manufacturer, Patent Owner did not include the Pixel 2 XL phone in its infringement complaint against LG, and did not include LG in its patent infringement action against Google, which listed the Pixel 2 XL as an accused product. *See* Ex. 1027 ¶¶ 48, 212; Ex. 1026 ¶¶ 38, 122. Thus, we cannot conclude, based on this record, that Google's Petition was representing LG's interests with respect to the Pixel 2 XL.

Finally, Patent Owner argues that Google named Huawei—who manufactures a phone for Google called the Nexus 6P—as a real party in interest, and that Google should have named LG as a real party in interest by the same logic. Reply Term. 4. Patent Owner argues that "Google's sole explanation for identifying Huawei as [a real party in interest] to this IPR was Huawei's role as the 'original design manufacturer, or ODM, for Google' for . . . the Nexus 6P." *Id.* (citing Ex. 2047, 4 (attorney correspondence)). This explanation was in a letter from Google's lead counsel, responding to a request from Patent Owner's counsel to "[p]lease explain Google's relationship to Huawei and why Huawei was identified as a real party in interest when other phone manufacturers with whom Google competes were not." Ex. 2047, 2. In response, counsel for Google referred to a filing by Huawei in its district court litigation, and stated,

> The cited portion of this document describes the relationship between Google and Huawei related to the Nexus 6P device, which CyWee has accused Huawei of infringing the . . . '978 patent[]. As that document states, "[u]nlike the other six accused devices [in the Huawei litigation], Huawei did not build the Nexus 6P for itself, but served as the original design manufacturer, or ODM, for Google."

Id. at 4 (citing *id.* at 10). Google contests Patent Owner's characterization of this as the "sole" explanation for including Huawei as a real party in interest. Rather, Google states that "Huawei was involved in Google's IPR petitions prior to filing." Sur-reply Term. 2; *see also* Tr. 94:18–95:2 (confirming Huawei's "consult[ation] in the process of formulating the Petition").

We disagree with Patent Owner that Google's naming of Huawei as a real party in interest suggests that LG is also a real party in interest. The real-party-in-interest question is highly fact-dependent. *See Ventex*, Paper 152 at 6. Although Google represents that it consulted Huawei in preparing the Petition, it also represents that it did not consult LG. *See* Opp. Term. 4–5. Furthermore, prior to the filing of Google's Petition, Patent Owner had already sued Huawei for patent infringement with respect to the Nexus 6P in district court. *See* Ex. 2047, 8. Thus, Google's relationship with Huawei with respect to the Nexus 6P, prior to filing the Petition, was substantially different from that of LG with respect to the Pixel 2 XL.

For the above reasons, we determine that the relationship between Google and LG regarding the Pixel 2 XL does not suggest that LG is a real party in interest in this proceeding.

c. Google's Supplying of the Android Operation System to LG, Samsung, and ZTE

Patent Owner argues that LG, Samsung, and ZTE are real parties in interest, in part, because Google is the exclusive supplier of operating systems used in LG's smartphones, tablets, and other handheld devices, as well as in Samsung's and ZTE's accused devices. Mot. Term. 9, 11. According to Patent Owner, "Google's Android OS is a major component of all the products accused of infringing the . . . '978 Patent[] in CyWee's infringement actions." *Id.* at 9–10; *see also id.* at 3 (citing Ex. 2015), 11.

Petitioner counters that Patent Owner's infringement contentions do not accuse Google of supplying any of the hardware, such as the housing, accelerometer, gyroscope, printed circuit board, or magnetic sensor used in the claimed methods of the '978 patent. *See* Opp. Term. 3 (citing Ex. 1027, 43–68 (Exs. A, B); Ex. 1029, 39–65 (Exs. A, B)). Further, Petitioner argues that Google is not the sole supplier of relevant software for the devices Patent Owner has accused of infringement. *Id.* at 4. For example, Petitioner argues that in district court litigation, Patent Owner conceded that contrary to its initial infringement contentions, some of the accused devices rely on software from Qualcomm or Samsung for the accused infringing functionality. *Id.* (citing Ex. 1034, 2, 10, 14 (Case No. 2:17-cv-00140, evidentiary motions opinion)); *see also* Ex. 1050 (Case No. 2:17-cv-00140, Patent Owner's Motion to Supplement Infringement Contentions and Expert Reports).

Patent Owner clearly implicates Android in its theory of infringement for at least some of the accused devices. *See* Ex. 1027, Ex. A (claim chart for LG); Ex. 2015 (claim chart for Samsung); Ex. 1029, Ex. A (claim chart

for ZTE). However, based on the evidence presented here, we find that Google's technology plays only a supporting role in Patent Owner's contentions against LG, Samsung, and ZTE, and not with respect to all products. Therefore, we determine that the presence of the Android operating system in the accused devices does not itself suggest that LG, Samsung, or ZTE are real parties in interest.

d. The PAX License

While the Android operating system is open source, *see* Ex. 2016, 2; Ex. 1030, 1; Ex. 1031; Ex. 1032, 1; Ex. 1033, 2, Google leads and directs the project that develops Android, and curates its software repository. *See* Ex. 1030, 1–2; Opp. Term. 3; Reply Term. 4. Moreover, while Google states that "you can use Android without Google," it encourages developers to enter voluntary partner agreements with Google. Ex. 1033, 2. PAX appears to be one of these agreements, and LG and Samsung are members. Ex. 1035; Mot. Term. 10. According to the PAX website,[11] PAX is a "community-driven clearinghouse," and "is free to join and open to anyone." Ex. 2016, 2; Ex. 1035, 1. "Under PAX, members grant each other royalty-free patent licenses covering Android and Google Applications on qualified devices." Ex. 2016, 2.

Patent Owner alleges that the PAX license "prove[s] a pre-existing, substantive legal relationship between Google and at least Samsung and

[11] Google did not provide a copy of this agreement to Patent Owner during discovery. *See* Tr. 54:4–6. However, Patent Owner does not call into question the accuracy of any information about PAX presented on the license's website.

LG," which "relates to the products accused of infringing the patent-at-issue." Mot. Term. 12. In response, Google argues that "the PAX agreement has no bearing on the members' conduct with respect to IPRs involving *non-member's* patents." Opp. Term. 14.[12]

We agree with Petitioner. Based on the information about PAX on its website, the cross-license does not relate to any interests that its members might have in invalidating claims of the '978 patent, because Patent Owner is not a member of PAX. Thus, the PAX community is unlike the RPX organization in *Applications in Internet Time*. Unlike the PAX community, the Federal Circuit determined based on the evidence of record before it that RPX is a "for-profit company whose clients pay for its portfolio of 'patent risk solutions,'" 897 F.3d at 1351, including acting as an "intermediary between patent owners and operating companies." *Id.* at 1339. Based on the evidence of record in this proceeding, the existence of PAX does not suggest that LG, Samsung, or ZTE is a real party in interest.

e. Google's MADA with Samsung

In addition to PAX, Patent Owner points to a Mobile Application Distribution Agreement ("MADA") between Google and Samsung, covering the period of 2011–2012, as evidence that Samsung is a real party in interest.

---

[12] In conjunction with this argument, Petitioner argues that a real party in interest "is the relationship between a party and a *proceeding*; [real party in interest] does not describe the relationship between *parties*." Opp. Term. 14 (quoting *Aruze Gaming Macau, Ltd.*, IPR2014-01288, Paper 13 at 11(PTAB Feb. 20, 2015)). While an entity is a real party in interest in relation to a particular proceeding, we do not understand the non-precedential *Aruze* decision to suggest that the relationship between the parties is not a central issue in a real-party-in-interest analysis.

Ex. 2014. According to Patent Owner, this agreement "contained indemnification provisions for applications running on the Android OS and for Android-based devices." Mot. Term. 5 (citing Ex. 2014 §§ 11.1–11.2). In particular, Patent Owner argues that the MADA "includes indemnification provisions for both parties." *Id.* at 12. Based on this example, Patent Owner suggests that Google would have made a similar agreement with LG. *See* Mot. Term. 10.

Petitioner argues that the "applications" covered by these MADA indemnification provisions are not the Android operating system itself, and thus are not implicated in Patent Owner's infringement suits. *See* Opp. Term. 12–13. We agree. The indemnification provision in Samsung's MADA requires Google to indemnify Samsung for patent infringement claims only against the "Google Applications," Ex. 2014 § 11.1, which the document defines as a list of specific applications such as Gmail, Google Calendar, and Google Maps,[13] *id.* § 1.12. The Google Applications are not the Android operating system, and thus are not implicated in Patent Owner's infringement contentions against Samsung.

Also in the MADA, Samsung indemnifies Google for patent infringement of any "Device (or application installed thereon other than the Google Applications)." Ex. 2014 § 11.2. The agreement defines "Device" as "the device(s) approved by Google . . . and using only the Android

[13] During the oral hearing, Patent Owner raised the argument that Google Maps was part of its infringement case against Google. Tr. 54:7–55:15, 57:23–63:18. But Patent Owner did not make this argument in its Motion to Terminate or the supporting Reply, and did not point to any specific supporting evidence. Thus, we do not consider this argument in this Decision. *See* 37 C.F.R. § 42.23(b).

operating system which is enabled by [Samsung] and used by an End User to access the [wireless internet] Service." *Id.* § 1.9. In other words, Samsung provides indemnification for any suit against Google for alleged patent infringement by Samsung's devices (other than because the devices use the Google Applications). But Patent Owner's complaints do not accuse Google of infringement associated with any of Samsung's devices. *See* Ex. 1026 ¶¶ 38, 122; Ex. 1028 ¶¶ 22, 203. Thus, Patent Owner does not point to any instance in which Patent Owner's assertion of the '978 patent relates to either Google's or Samsung's interests under this indemnification provision.

Accordingly, while Google's MADA with Samsung represents a pre-existing relationship between the two parties that includes a two-way indemnification agreement against suits by third parties, these indemnification provisions do not appear to relate to Patent Owner's assertions of the '978 patent in district court. We therefore determine that the MADA does not suggest that Samsung is a real party in interest to this proceeding.

f. Google's Reliance on a Samsung phone for a Trademark Registration

Patent Owner argues that "Google relied on a Samsung phone as its own 'evidence of use' to register its ANDROID cellphone trademark." Reply Term. 4 (citing Ex. 2046). In its submission for the mark "ANDROID," Google included a specimen photograph of a Samsung Galaxy S5 phone, with an image on the screen reading "powered by ANDROID." Ex. 2046, 5. Google described the image as "a photograph showing the mark as it appears when the operating system software is running on a mobile phone." *Id.* at 2.

Although Patent Owner raised this argument for the first time in its supporting Reply, we consider the issue because Petitioner responded substantively in the Sur-reply, without objection. *See* Sur-reply Term 1. According to Petitioner, "CyWee's allegations against the Samsung accused products are directed to Qualcomm, not Google. *See* Ex. 1050. Exhibit 2046 is, therefore, irrelevant." *Id.* at n.1.

The evidence suggests that Patent Owner's allegations of infringement in district court rely on Qualcomm, rather than Google, for the accused infringing software on at least some phones. *See* Ex. 2046; Ex. 1034, 2, 10, 14. The evidence of record does not clearly show whether this applies specifically to the Galaxy S5;[14] however, even if it did not, Google's trademark submission simply shows that Samsung has allowed Google's "ANDROID" mark to appear on its phone. Moreover, Patent Owner does not explain how Google's trademark would be affected by this *inter partes* review. Thus, we determine that Exhibit 2046 does not suggest that Samsung is a real party in interest.

g. Patent Owner's Supplemental Submission

After the hearing, with our authorization (*see* Papers 74, 75), Patent Owner filed a Supplemental Submission containing additional documents that ZTE had produced during discovery in the related IPR2019-00143 proceeding. Paper 76. This submission included [redacted] (Exs. 2049, 2051, 2053), an [redacted]

[14] We note that Patent Owner does not appear to have included the Galaxy S5 as an accused product in its complaint against Samsung. *See* Ex. 1028 ¶¶ 22, 203.

[redacted] (Ex. 2050), an [redacted] (Ex. 2052), a [redacted] (Ex. 2054), and an [redacted] (Ex. 2055). We also authorized Patent Owner to submit "brief, nonargumentative statements identifying the portions of the agreements relevant to Patent Owner's arguments advanced in the Motion to Terminate." Paper 74, 3; *accord* Paper 75, 2. We also authorized Petitioner to submit objections, Paper 78, and stated that we would consider those objections "in evaluating whether Patent Owner's supplemental information properly supports arguments made in its Motion to Terminate." Paper 75, 3.

Patent Owner's identification of relevant portions of the submitted documents consists of 15 paragraphs, each relating to a group of similar passages found in several of these documents. Of these, paragraphs 1–12 relate to [redacted]. Paper 76 ¶¶ 1–12. Although Patent Owner admits that [redacted] *see id.*, Patent Owner did not argue in its briefs, or during the oral hearing, that we should consider these provisions in our real-party-in-interest or privity analyses.

Petitioner argues that paragraphs 1–12 "posit, for the first time, that [redacted]." Paper 78, 1. According to Petitioner, "[t]he introduction of such [redacted], without providing Google adequate notice and opportunity to respond, would violate due process and the Administrative Procedure Act," as well as 37 C.F.R. §§ 42.23(b) and 42.123(b). *Id.* at 1–3 (citing *Genzyme Therapeutic Prods.*

L.P. v. Biomarin Pharm. Inc., 825 F.3d 1360, 1367 (Fed. Cir. 2016); *Belden, Inc. v. Berk-Tek LLC*, 805 F.3d 1064, 1080 (Fed. Cir. 2015); 5 U.S.C. §§ 554(b)–(c), 557(c)).

We agree with Petitioner that paragraphs 1–12 of Patent Owner's submission introduce a substantial new argument. Moreover, given that many of the cited passages are equivalent to passages found in Google's [redacted], Patent Owner could have introduced this argument in its Motion to Terminate, but did not, and Petitioner has not had a fair opportunity to respond. Therefore, we do not consider this argument in our real-party-in-interest or privity analyses. *See* 37 C.F.R. §§ 42.23(b), 42.123(b).

Paragraph 13 of Patent Owner's supplemental submission identifies provisions, also found in [redacted], which [redacted] *See* Ex. 2049 §§ 10.2, 1.13; Ex. 2051 §§ 10.2, 1.1(r); Ex. 2053 §§ 9.2(c), 1.28; Ex. 2054 §§ 11.2(d), 1.1(s); *see also* [redacted]. Patent Owner argues that under these provisions, "[t]he parties remain liable under the agreements for [redacted] . . but do not define those rights as belonging solely to one of the parties." Paper 76 ¶ 13. Thus, Patent Owner's position appears to be that these passages [redacted]

[redacted][15] Although Patent Owner raised the issue of [redacted] in its Motion to Terminate, it did not point to these passages in Google's MADA with Samsung, or make this argument. *See* Mot. Term. 5. Therefore, we do not consider this argument in our real-party-in-interest or privity analyses. *See* 37 C.F.R. §§ 42.23(b), 42.123(b).

Paragraph 14 of Patent Owner's supplemental submission identifies [redacted]. Patent Owner raised the issue of corresponding indemnification between Google and Samsung in its Motion to Terminate. *See* Mot. Term. 5 (citing Ex. 2014 ¶¶ 11.1–11.2). [redacted] Ex. 2049 §§ 1.8, 1.11, 11.1, 11.2; Ex. 2051 §§ 1.1(j), 1.1(m), 11.1(b), 11.4(e); Ex. 2053 §§ 1.15, 1.21, 10.1(b), 10.4(e). Thus, the provisions in Patent Owner's newly submitted documents do not add any additional weight to the arguments Patent Owner made in its briefs.

For the above reasons, we determine that Paragraphs 1–14 of Patent Owner's Supplemental Submission, and the citations included therein, do

[15] Although we do not factor this issue into our decision, a [redacted] would seem to cut against Patent Owner's argument that Samsung and ZTE are real parties in interest in this proceeding.

not suggest that LG, Samsung, or ZTE are real parties in interest. We discuss paragraph 15 in the next section.

h. Google's Participation in Prior District Court Litigation

Patent Owner argues that Google has a common litigation interest with LG, Samsung, and ZTE, all of them standing to benefit from this proceeding, such that they are all real parties in interest. *See* Mot. Term 9, 11 (citing *Ventex*, Paper 152, 9). According to Patent Owner, LG, Samsung, and ZTE "have affirmed this interest by joining as parties to this IPR." *Id.* at 11; *see also* Reply Term. 2.

Moreover, Patent Owner argues that the parties entered into a [redacted] prior to the date that Patent Owner served its complaint on Google. Reply Term. 2–3 (citing Ex. 2045, 22:2–30:1, 37:5–38:8, 41:7–19, 45:3–9). In its Supplemental Submission, Patent Owner includes a privilege log, which lists a [redacted] Ex. 2056. In paragraph 15 of its Supplemental Submission, Patent Owner argues that "[t]his document is relevant because in January 2018, Google had not been accused of infringement by CyWee and had not been sued by CyWee." Paper 76 ¶ 15. According to Patent Owner, [redacted]." *Id.*

Petitioner objects to Patent Owner's argument in the Supplemental Submission because it has not "had an opportunity to respond to CyWee's

speculation concerning the basis [redacted] Paper 78, 5. Without deciding whether Patent Owner's argument in the post-trial submission is proper, we do not agree that the mere existence, or timing, of [redacted] suggests that Samsung is a real party in interest. *See* [redacted]

Patent Owner also alleges that as part of this [redacted], "Google is acting as a proxy for the Android Defendants to relitigate validity" with respect to the Bachmann reference. Mot. Term. 12. According to Patent Owner, Bachmann "was first raised by Samsung in its invalidity contentions at district court but was subsequently dropped by Samsung. Thus, Google is acting as a proxy to allow Samsung to relitigate prior art that it previously abandoned." *Id.* at 13.

Petitioner counters that, in district court, Patent Owner argued "that Samsung had dropped Bachmann after Google filed its IPRs . . . , and that by so doing Samsung had 'implicitly conceded that the Google IPRs are meritless.'" Opp. Term. 15 (citing Ex. 1015, 1, 13 (opposition to motion to stay proceedings in Case No. 2:17-cv-00140)). According to Petitioner, "[t]he notion that Samsung convinced Google to file IPRs that Samsung (according to CyWee) considered to be 'meritless,' all to revive an invalidity case Samsung had yet to drop, strains credulity." *Id.* at 15–16.

We agree with Petitioner that the evidence does not suggest Google is acting as Samsung's proxy to relitigate the Bachmann reference. Indeed, Samsung's choice to drop Bachmann as a prior-art reference, despite

Google's choice to assert it in its Petition, is strong evidence that Google was not representing Samsung's interests when it filed the Petition.

In addition, as Petitioner notes, although Patent Owner has sued each of the joint petitioners for patent infringement, Patent Owner sued these companies separately, "based on each company's own separate devices," which compete with each other in the smartphone market. Opp. Term. 9. Thus, we agree with Petitioner that Google's interests in challenging the '978 patent are different from the interests of LG, Samsung, and ZTE. *Id.* This further suggests that the other [redacted] are not real parties in interest to Google's Petition.

Thus, we determine that the fact that Petitioner parties have entered a [redacted] does not suggest that Samsung is a real party in interest, and there is evidence strongly suggesting that Google was not representing the interests of at least Samsung when it filed the Petition.

i. The Evidence as a Whole

As discussed in the sections above, we determine that LG's statements in the related inter *partes review* petitions, LG's manufacture of the Pixel 2 XL for Google, the limited presence of Google's technology in the accused devices, the PAX license, Google's MADA with Samsung, Exhibit 2046, or paragraphs 1–14 and the cited passages in Patent Owner's Supplemental Submission, do not suggest that LG, Samsung, or ZTE is a real party in interest. Although Google has been a [redacted] that includes LG, Samsung, and ZTE since before Patent Owner sued Google, the evidence suggests that [redacted] had distinct interests, which they represented independently. Therefore, the

evidence discussed above, as a whole, supports Petitioner's contention that Google correctly named the real parties in interest to this proceeding, and that these parties do not include LG, Samsung, or ZTE.

In addition, we credit the following representations of Google's counsel, which Patent Owner has not specifically contested:

> 6.1 The petitions that Google filed in these IPR proceedings were not filed on behalf of, or at the encouragement of, or at the behest or suggestion of, any of LG, Samsung, or ZTE. Neither LG, nor Samsung, nor ZTE directed, funded, or controlled these IPR proceedings or the preparation of Google's petition in these proceedings. Neither LG, nor Samsung, nor ZTE has the ability to determine whether Google maintains or settles these IPR proceedings against CyWee.
>
> 6.2 Google selected the prior art for Google's IPR petitions, determined the grounds for its petitions, developed the positions for its petitions, and financed its petitions. Google did not inform LG or Samsung or ZTE of the specific patent(s) for which Google would file IPR petition(s) or the art or grounds for its petition(s), and did not provide LG or Samsung or ZTE with drafts of Google's petitions. Neither LG, nor Samsung, nor ZTE provided any input into Google's petitions or had the opportunity to review or edit any drafts of Google's petitions.

Opp. Term. 4–5.

Similarly, we credit Google's uncontested representations that [redacted] Opp. Term. 13 n.1 (citing Ex. 1038 ¶¶ 6, 9). This representation finds support, at least with respect to LG, in Mr. Park's declaration. *See generally* Ex. 1038.

Therefore, we conclude that Google has met its burden to show that LG, Samsung, and ZTE are not real parties in interest. Thus, the Petition is not time-barred under 35 U.S.C. § 315(b) on the basis that Google filed the

Petition more than one year after the date on which Patent Owner sued a real party in interest, and the Petition is not improperly considered under 35 U.S.C. § 312(a)(2).

2. Privity

"[T]he privity analysis seeks to determine 'whether the relationship between the purported "privy" and the relevant other party is sufficiently close such that both should be bound by the trial outcome and related estoppels.'" *WesternGeco LLC v. ION Geophysical Corp.*, 889 F.3d, 1308, 1318 (Fed. Cir. 2018) (quoting Trial Practice Guide, 77 Fed. Reg. at 48,759; *accord* Consolidated Trial Practice Guide, 14–15). In *Taylor v. Sturgell*, 553 U.S. 880 (2008), the Supreme Court identified a non-exhaustive list of exceptions to the normal rule against non-party preclusion. *Id.* at 894–95. Any of these *Taylor* exceptions, listed below, may give rise to privity between a patentee and a non-party:

> (1) an agreement between the parties to be bound; (2) pre-existing substantive legal relationships between the parties; (3) adequate representation by the named party; (4) the non-party's control of the prior litigation; (5) where the non-party acts as a proxy for the named party to relitigate the same issues; and (6) where special statutory schemes foreclose successive litigation by the non-party (e.g., bankruptcy and probate).

Ventex, Paper 152 at 12 (quoting *Applications in Internet Time*, 897 F.3d at 1360 (Reyna, J. concurring)). Further, the "concept of privity 'is an equitable rule that takes into account the "practical situation," and should *extend to parties to transactions and other activities relating to the property in question*.'" *Applications in Internet Time*, 897 F.3d 1336 at 1349 (citing

Trial Practice Guide, 77 Fed. Reg. at 48,759; *accord* Consolidated Trial Practice Guide, 15).

Patent Owner argues that the same facts establishing that LG and Samsung[16] are real parties in interest also establish that they are Google's privies under at least *Taylor* exceptions 1, 2, and 5. Mot. Term. 12. Regarding *Taylor* exceptions 1 and 2, Patent Owner argues that "PAX and the MADA prove a pre-existing, substantive legal relationship between Google and at least Samsung and LG," and "[t]he subject of these agreements relates to the products accused of infringing the patents-at-issue." *Id.* In particular, according to Patent Owner, "[t]he MADA indemnification clauses are an example of an agreement to be bound in litigation proceedings based on applications developed for the Android OS and for Android-based devices." *Id.*

In part II.B.1.d. above, we determine that the PAX license does not relate to any interests that its members might have in invalidating claims of the '978 patent, because Patent Owner is not a member of PAX. Thus, PAX does not reflect any agreement by LG or Samsung to be bound by this proceeding, and does not reflect any relationship between these parties that would justify binding LG or Samsung to the outcome of a petition by Google challenging the '978 patent.

Likewise, in part II.B.1.e. above, we determine that the MADA indemnification clauses do not relate to Google's or Samsung's interests having to do with Patent Owner's assertion of the '978 patent. Although

[16] Because Google filed the Petition within a year of the date that Patent Owner served its complaint on ZTE, we need not consider whether Google's privies include ZTE. *See* Mot. Term. 3; Opp. Term. 2.

Google indemnifies Samsung for patent infringement claims against the "Google Applications," Ex. 2014 § 11.1, these applications do not include the Android operating system that is the subject of Patent Owner's infringement contentions. *See id.* § 1.12. While Samsung indemnifies Google for patent infringement of any "[d]evice (or application installed thereon other than the Google Applications)," Ex. 2014 § 11.2, Patent Owner's complaints do not accuse Google of infringement associated with any of Samsung's devices. *See* Ex. 1026 ¶¶ 38, 122; Ex. 1028 ¶¶ 22, 203. Thus, the evidence does not show that the MADA constitutes an agreement or pre-existing substantive legal relationship that should bind Samsung or any other party to the outcome of Google's petition challenging the '978 patent.

Further, in our discussion above in part II.B.1., we determine that LG's manufacture of the Pixel 2 XL for Google, the presence of Google's technology in the accused devices, Exhibit 2046, and the parties' [redacted] do not suggest that LG or Samsung is a real party in interest. For the same reasons, these are not substantive legal relationships that establish privity between Google and LG or Samsung.

Patent Owner next argues that Samsung is Google's privy under *Taylor* exception 5, because Google is acting as a proxy for Samsung to relitigate the Bachmann prior art reference, even though Samsung

abandoned that reference in district court litigation. Mot. Term. 12–13.[17] As we discuss in part II.B.1.h. above, the evidence does not suggest Google is acting as Samsung's proxy to relitigate the Bachmann reference. In fact, since Samsung abandoned the reference after Google filed its Petition, the evidence strongly suggests the contrary.

Therefore, we determine that neither LG nor Samsung is a privy to Google in this proceeding. Thus, the Petition is not time-barred under 35 U.S.C. § 315(b) on the basis that Google filed the Petition more than one year after the date on which Patent Owner sued one of Google's privies.

C. Conclusion

For the above reasons, and by a preponderance of the evidence, Google has met its burden to show that its Petition is not time-barred under 35 U.S.C. § 315(b) and that the Petition is properly considered under 35 U.S.C. § 312(a)(2). We therefore deny Patent Owner's Motion to Terminate.

---

[17] Patent Owner argues that ZTE has also asserted Bachmann in the IPR2019-00143 proceeding, and that this "acts as a second chance for Google and the Android Defendants to invalidate the related '438 Patent with the advantage of seeing Google and CyWee's arguments relating to that art." Mot Term. 13. Patent Owner does not explain how this argument relates to whether *Google* is acting as a proxy for either LG or Samsung in this proceeding. Therefore, we do not consider this argument pertinent to our privity analysis.

III. SECOND MOTION TO TERMINATE: APPOINTMENT OF ADMINISTRATIVE PATENT JUDGES

In its second Motion to Terminate, Patent Owner contends this proceeding should be terminated because the Board lacks constitutional power to issue a Final Written Decision in this proceeding under the Appointments Clause of the U.S. Constitution. Second Mot. Term. We decline to consider Patent Owner's constitutional challenge as the issue has been addressed by intervening Federal Circuit authority in *Arthrex, Inc. v. Smith & Nephew, Inc.*, 941 F.3d 1320, 1328 (Fed. Cir. 2019).

IV. PATENTABILITY OF CHALLENGED CLAIMS

A. Legal Principles

A claim is unpatentable for obviousness under 35 U.S.C. § 103(a) if the differences between the claimed subject matter and the prior art are "such that the subject matter as a whole would have been obvious at the time the invention was made to a person having ordinary skill in the art to which said subject matter pertains." *KSR Int'l Co. v. Teleflex Inc.*, 550 U.S. 398, 406 (2007). The question of obviousness is resolved on the basis of underlying factual determinations, including: (1) the scope and content of the prior art; (2) any differences between the claimed subject matter and the prior art; (3) the level of skill in the art; and (4) when in evidence, objective indicia of non-obviousness, i.e., secondary considerations. *Graham v. John Deere Co.*, 383 U.S. 1, 17–18 (1966).

Additionally, the obviousness inquiry typically requires an analysis of "whether there was an apparent reason to combine the known elements in the fashion claimed by the patent at issue." *KSR*, 550 U.S. at 418 (citing *In*

re Kahn, 441 F.3d 977, 988 (Fed. Cir. 2006) (requiring "articulated reasoning with some rational underpinning to support the legal conclusion of obviousness")); *see In re Warsaw Orthopedic, Inc.*, 832 F.3d 1327, 1333 (Fed. Cir. 2016) (citing *DyStar Textilfarben GmbH & Co. Deutschland KG v. C.H. Patrick Co.*, 464 F.3d 1356, 1360 (Fed. Cir. 2006)).

To prevail on its challenges, Petitioner must demonstrate by a preponderance of the evidence that the claims are unpatentable. 35 U.S.C. § 316(e); 37 C.F.R. § 42.1(d). "In an [*inter partes* review], the petitioner has the burden from the onset to show with particularity why the patent it challenges is unpatentable." *Harmonic Inc. v. Avid Tech., Inc.*, 815 F.3d 1356, 1363 (Fed. Cir. 2016) (citing 35 U.S.C. § 312(a)(3) (requiring *inter partes* review petitions to identify "with particularity . . . the evidence that supports the grounds for the challenge to each claim")). This burden never shifts to Patent Owner. *See Dynamic Drinkware, LLC v. National Graphics, Inc.*, 800 F.3d 1375, 1378 (Fed. Cir. 2015) (citing *Tech. Licensing Corp. v. Videotek, Inc.*, 545 F.3d 1316, 1326–27 (Fed. Cir. 2008)) (discussing the burden of proof in *inter partes* review). Furthermore, Petitioner does not satisfy its burden of proving obviousness by employing "mere conclusory statements." *In re Magnum Oil Tools Int'l, Ltd.*, 829 F.3d 1364, 1380 (Fed. Cir. 2016).

B. Level of Skill in the Art

In determining whether an invention would have been obvious at the time it was made, we consider the level of ordinary skill in the pertinent art at the time of the invention. *Graham*, 383 U.S. at 17. "The importance of resolving the level of ordinary skill in the art lies in the necessity of

maintaining objectivity in the obviousness inquiry." *Ryko Mfg. Co. v. Nu-Star, Inc.*, 950 F.2d 714, 718 (Fed. Cir. 1991). The "person of ordinary skill in the art" is a hypothetical construct, from whose vantage point obviousness is assessed. *In re Rouffet*, 149 F.3d 1350, 1357 (Fed. Cir. 1998). "This legal construct is akin to the 'reasonable person' used as a reference in negligence determinations" and "also presumes that all prior art references in the field of the invention are available to this hypothetical skilled artisan." *Id.* (citing *In re Carlson*, 983 F.2d 1032, 1038 (Fed. Cir. 1993)).

Petitioner's declarant, Dr. Sarrafzadeh, opines that a person of ordinary skill in the art would have "had at least a Bachelor's Degree in Computer Science, Electrical Engineering, Mechanical Engineering, or Physics, or equivalent work experience, along with knowledge of sensors (such as accelerometers, gyroscopes and magnetometers), and mobile computing technologies." Ex. 1002 ¶ 24; *see* Ex. 1018 ¶ 22 (similar statement in Dr. Sarrafzadeh's second Declaration). Patent Owner does not propose a level of skill in the art in its Response, but Patent Owner's declarant, Dr. LaViola, makes the same assertion as Dr. Sarrafzadeh. Ex. 2004 ¶ 27. Dr. LaViola adds, however, that a person of ordinary skill in the art would also "be familiar with Kalman filters and [extended Kalman filters], and with equations typically used with such filters." *Id.*

The '978 patent makes no explicit reference to "Kalman filters" or "extended Kalman filters." But in providing an example of calculations performed at block 735 of Figure 7, reproduced above, to obtain an updated (third quaternion) state, the '978 patent provides a set of equations, namely equations (5)–(11). Ex. 1001, 17:46–18:24. Dr. LaViola explains that these

equations "represent a non-linear recursive estimator (as any [person of ordinary skill in the art] would understand by examining the mathematical equations) which, in the case of this embodiment of the '978 Patent, combines elements of an extended Kalman Filter coupled with a weighted vector norm." Ex. 2004 ¶ 37. Dr. Sarrafzadeh does not dispute this characterization. In addition, we find Dr. LaViola's proposed addition consistent with the level of ordinary skill reflected by the prior art of record. *See, e.g.*, Ex. 1004, 9:37–40 ("Alternatively, other filtering embodiments can be employed including, but not limited to least squares filtering, Wiener filters, or Kalman filters can be used."); Ex. 1006, 18:26–29 ("The combination can be achieved using several numerical and filtering methods including, but not limited to, Kalman filtering.").

In our preliminary evaluation in the Institution Decision, we also found knowledge of quaternion mathematics to be within the level of ordinary skill. Dec. 13–15. We addressed that issue in response to an argument advanced by Patent Owner that it now appears to have abandoned. *See* Reply 27 ("CyWee did not address this issue in its Patent Owner Response, however, and expressed an intent to drop the issue on a conference call with the Board held April 17, 2019, in which the parties discussed whether CyWee's preliminary-stage declarant, Dr. Blank, was subject to mandatory cross-examination."). Patent Owner has expressly withdrawn the Declaration of Dr. Blank on which it previously relied for this point, Paper 18, and Dr. LaViola testified on cross-examination that quaternions "would be known to someone of ordinary skill in the art," Ex. 1019, 33:2–12. In light of these considerations, we continue to find knowledge of quaternion mathematics within the level of ordinary skill.

We therefore modify our preliminary finding slightly, and find a person of ordinary skill in the art to have an undergraduate degree in computer science, electrical engineering, mechanical engineering, or other related technical field, and knowledge of sensor systems, mobile computing technologies, Kalman filters, and quaternion mathematics.

C. Claim Construction

In an *inter partes* review proceeding based on a petition filed prior to November 13, 2018, the Board interprets claims of an unexpired patent using the broadest reasonable construction in light of the specification of the patent in which they appear. *See* 37 C.F.R. § 42.100(b) (2017)[18]; *Cuozzo Speed Techs., LLC v. Lee*, 136 S. Ct. 2131, 2144–46 (2016) (upholding the use of the broadest reasonable interpretation standard). Under the broadest reasonable interpretation standard, claim terms generally are given their ordinary and customary meaning, as would be understood by one of ordinary skill in the art at the time of the invention. *In re Translogic Tech., Inc.*, 504 F.3d 1249, 1257 (Fed. Cir. 2007). An inventor may provide a meaning for a term that is different from its ordinary meaning by defining the term in the specification with reasonable clarity, deliberateness, and precision. *In re Paulsen*, 30 F.3d 1475, 1480 (Fed. Cir. 1994).

In the Institution Decision, we provided the following preliminary constructions of terms that appear in independent claim 10. Dec. 9–11.

---

[18] A recent amendment to this rule does not apply here because the Petition was filed before November 13, 2018. *See* Changes to the Claim Construction Standard for Interpreting Claims in Trial Proceedings Before the Patent Trial and Appeal Board, 83 Fed. Reg. 51,340 (Oct. 11, 2018) (amending 37 C.F.R. § 42.100(b) effective November 13, 2018).

"spatial reference frame" and "spatial reference frame associated with the 3D pointing device"	a reference frame associated with the 3D pointing device, which always has its origin at the same point in the device and in which the axes are always fixed with respect to the device
"rotation output"	output of a rotation sensor
"3D pointing device"	a device capable of sensing movement and orientation in three dimensions to point to or control actions on a display

The parties do not contest these preliminary constructions, except that Patent Owner argues that the construction of "3D pointing device" should be further limited as "handheld." PO Resp. 22–26; Reply 1.

Patent Owner principally grounds its argument in the fact that one district court construed "3D pointing device" as requiring that the device be handheld. PO Resp. 25 (citing Ex. 2007, 6 (claim construction memorandum opinion in Case No. 1:17-cv-00780)). Applying a different claim-construction standard than the one we apply in this proceeding, that district court incorporated that requirement upon observing that "the ['978] patent specification describes only embodiments where the device is handheld and refers to prior art that was 'portable.'" Ex. 2007, 7. Dr. LaViola also makes this observation in stating that that construction "is consistent with how a [person of ordinary skill in the art] would understand the plain and ordinary meaning of the term," and in opining that "[a] user must be able to hold the pointing device in order to use it for its intended purpose." Ex. 2004 ¶ 52.

We are not persuaded by Patent Owner's argument, nor by Dr. LaViola's testimony. Importantly, at least one other district court has

not included a "handheld" requirement when construing the same term. *See* Ex. 2006, 2 (claim construction order in Case No. 2:17-cv-001400). Given the inconsistency among district courts that have considered the issue, it is thus not apparent, even under the standard used by district courts, that the term requires that a "3D pointing device" be handheld. Furthermore, limitations explicitly recited in the claim must be interpreted without reading limitations from the specification into the claim, which would thereby narrow the scope of the claim by implicitly adding disclosed limitations that are not recited. *In re Prater*, 415 F.2d 1393, 1404–05 (CCPA 1969). Although we have considered Dr. LaViola's testimony, we find that testimony conclusory and therefore entitled to little weight. *See* 37 C.F.R. § 42.65(a).

Upon consideration of the full trial record, we adopt our preliminary constructions for this Decision without modification.

D. Scope and Content of the Prior Art

1. Zhang

Zhang describes a "universal pointing device to control home entertainment systems and computer systems using spatial orientation sensor technologies." Ex. 1005 ¶ 7. When a user points the device to an arbitrary position of a screen, a set of orientation sensors inside the device detects the orientation and generates a pointing direction signal. *Id.* ¶ 21. Via encoding and transmission of the signal to a display control unit, and subsequent decoding and processing of the transmitted signal, a pointer image is superimposed onto a video input signal and displayed on a screen. *Id.* "The

user perceives that the pointer is moved following the aiming line of sight." *Id.*

Figure 3 of Zhang is reproduced below.

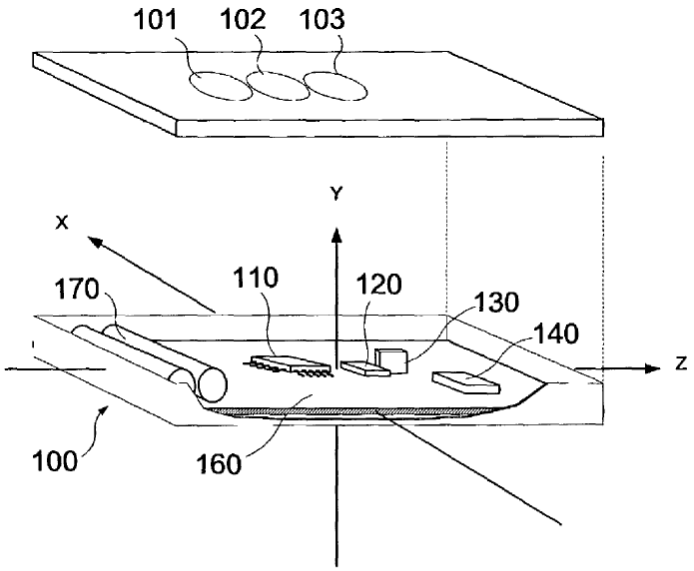

FIG. 3

Figure 3 illustrates internal components of the pointing device, as well as external buttons 101, 102, 103 for collecting "user selection activities." *Id.* ¶ 25. Orientation sensors 120 and 130 are mounted on printed circuit board 160, and respectively sense the device's yaw angle and pitch angle. *Id.* According to Zhang, "[a]dditional sensors (not show[n] in the picture) could be used to detect [the] device's roll angle which may provide an additional dimension of control." *Id.* Microcontroller 110 provides computation power as well as logic control for transmitter 140 and other electronic components. *Id.* Although Zhang expressly illustrates orientation detection with magnetic-field sensors and with accelerometer sensors, it teaches that "the orientation detection may not be limited to these types of sensors," and that other sensors such as a "gyro sensor" can be used. *Id.* ¶ 26.

In use, a modulated signal is transmitted from the device by transmitter 140 and intercepted by a receiver module of a display control unit, with the modulated signal including "handheld device orientation and user selection activities." *Id.* ¶¶ 29–30. After the signal is demodulated, pointing-device data are processed by comparing the device's azimuth- and inclination-angle data with reference angles that were sampled and stored in a memory module of the display control unit during a calibration procedure. *Id.* ¶ 30. "The difference angles calculated are translated into screen coordinates and the target device is instructed to move the pointer to the new location." *Id.*

2. Liberty

Liberty "relates generally to handheld, pointing devices and, more specifically to three-dimensional (hereinafter '3D') pointing devices and techniques for tilt compensation and improved usability associated therewith." Ex. 1006, 1:31–34. Figure 3 of Liberty is reproduced below.

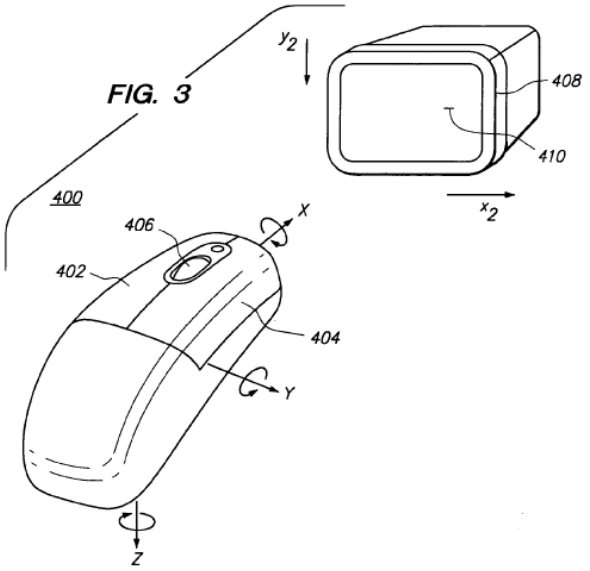

Figure 3 provides an exemplary illustration of Liberty's "3D pointing device." *Id.* at 5:38–39. "Such devices enable the translation of movement, e.g., gestures, into commands to a user interface," with Liberty describing both angular movements of roll, pitch, and yaw, as well as linear movement along "x, y, and z axes." *Id.* at 7:17–27. To track user movements, Liberty uses sensors within the pointing device, with one embodiment including two rotational sensors and one accelerometer. *Id.* at 7:57–60.

Liberty explains that "various measurements and calculations" are performed in determining appropriate output for a user interface based on outputs of such sensors. *Id.* at 8:36–42. In particular, such measurements and calculations are used to compensate for (1) intrinsic factors, such as errors associated with the particular sensors used, and (2) non-intrinsic factors associated with the manner in which a user uses the pointing device, such as linear acceleration, tilt, and tremor. *Id.* at 8:42–53. Liberty provides examples of mathematical techniques for handling each of these effects. *See id.* at 8:54–12:53. Such techniques include converting data from the frame of reference of the pointing device's body into another frame of reference, such as a user's frame of reference that corresponds to a coordinate system associated with a screen on which a user interface is displayed. *Id.* at 16:21–29.

Liberty addresses various modifications that may be made to its disclosure, including the use of different sensors that measure motion with respect to the body of the device, such as "accelerometers, rotational sensors, gyroscopes, magnetometers and cameras." *Id.* at 18:30–33. In addition, Liberty notes that "[t]he user frame does not need to be stationary," such as when the user's frame of reference is selected to be the user's

forearm, with the device responding only to wrist and finger movement. *Id.* at 18:34–37.

3. Bachmann

a. Overview of Disclosure

Bachmann describes "a method and apparatus for tracking the posture of a body without the need for a generated field (or source) of a plurality of fixed stations." Ex. 1004, 4:59–62. In particular, Bachmann describes "full body posture tracking of multiple users over an area that is only limited by the range of a wireless LAN." *Id.* at 5:3–6. As Bachmann explains, "a system having a plurality of sensors, each mounted to a limb of an articulated rigid body can be used to track the orientation of each limb." *Id.* at 5:25–28. Accordingly, "body posture can be tracked and introduced into a synthetic environment, thereby allowing a user to interface with the synthetic environment." *Id.* at 5:28–30.

Figure 4 of Bachmann is reproduced below.

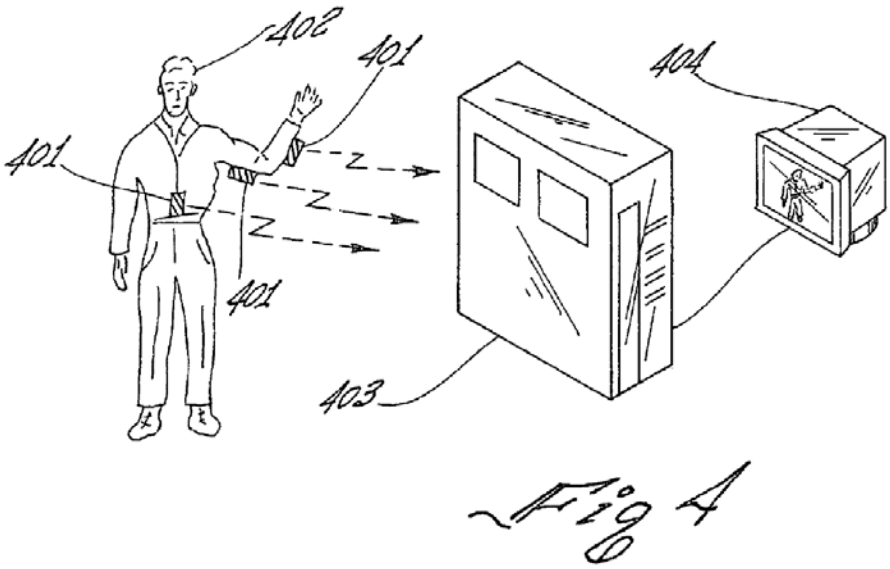

Figure 4 shows an embodiment "of an overall system implementation in accordance with the principles" described by Bachmann. *Id.* at 13:33–35. In this illustration, three sensors 401 are used to track the posture of an articulated rigid body in the form of human body 402. *Id.* at 13:35–36, 13:64–67. Bachmann explains:

> By mounting a plurality of sensors on a body, the posture of the body can be determined and tracked. Sensors constructed in accordance with the principles of the present invention can be used to track motion and orientation of simple rigid bodies as long as they are made of non-magnetic materials. Examples include, but are not limited to hand-held devices, swords, pistols, or simulated weapons. However, the inventors contemplate using the principles of the present invention to track the posture of articulated rigid objects, in one example, human bodies. Such articulated rigid bodies feature a plurality of segments interconnected by a plurality of joints. Each of the segments can correspond to, for example, limbs and extremities such as head, hands, forearms, legs, feet, portions of the torso, and so on. The joints correspond to wrist, elbow, shoulder, neck, backbone, pelvis, knees, ankles, and so on. The inventors contemplate the application of these principles to other articulated rigid body embodiments. For example, non-magnetic prosthetic devices, robot arms, or other machinery can be tracked in accordance with the principles of the present invention. Additionally, animal body motion can be tracked using such devices.

Id. at 13:42–62. Sensor information is output to processing unit 403, which calculates body posture and outputs a display signal to display 404, "thereby enabling the movement of the articulated rigid body 402 to be incorporated into a synthetic or virtual environment and then displayed." *Id.* at 14:1–26.

Bachmann describes such calculation through the use of a filter, in conjunction with data supplied by the sensors, to produce a sensor

orientation estimate. *Id.* at 7:32–34. In one embodiment of Bachmann, "the sensors include a three-axis magnetometer and a three-axis accelerometer." *Id.* at 7:34–35. In another embodiment, "the magnetometers and accelerometers are supplemented with angular rate detectors configured to detect the angular velocity of the sensor." *Id.* at 7:34–40.

Figure 3 of Bachmann is reproduced below.

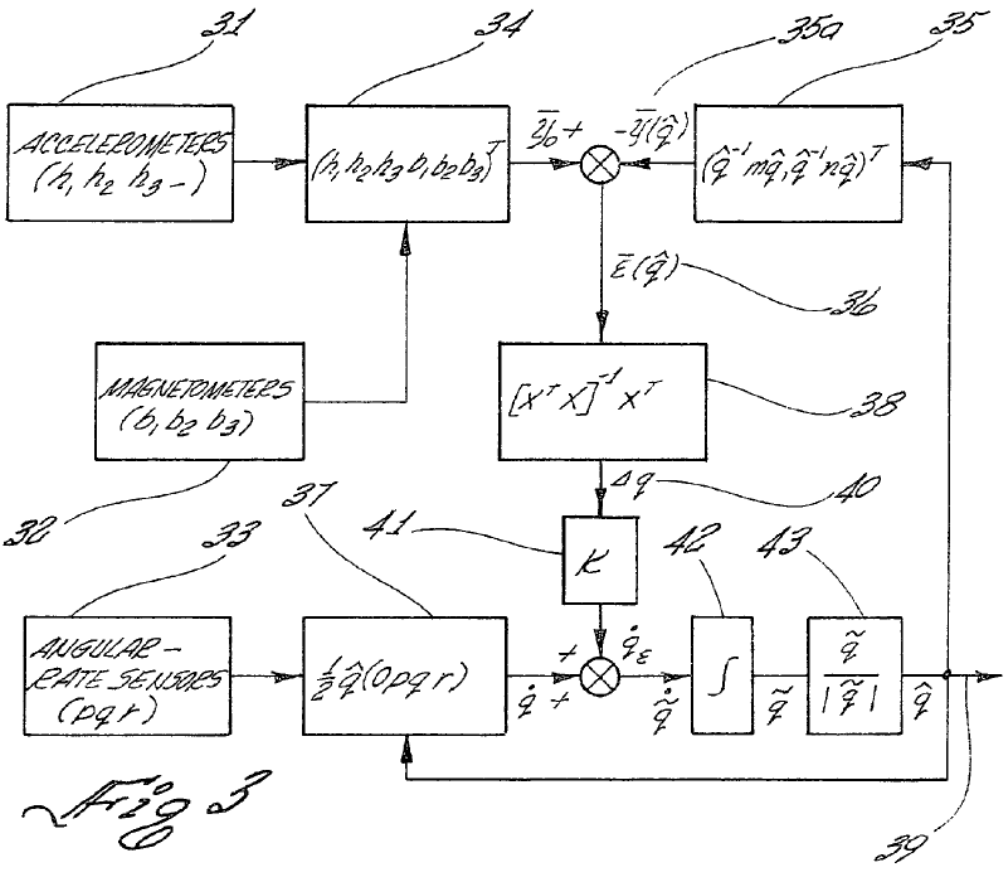

Figure 3 is a block diagram that illustrates a filtering method disclosed by Bachmann. *Id.* at 4:46–48. Using outputs from accelerometers 31, magnetometers 32, and angular rate sensors 33, Bachmann calculates an output $\hat{q}$ (identified by number 39 in the lower right of the drawing), which is a quaternion representing the orientation of the tracked object in space. *Id.* at 10:10–14. In calculating such output $\hat{q}$, sensor measurements from

accelerometers 31 and magnetometers 32 are used to calculate rate correction factor $\dot{q}_{\varepsilon}$, which is used to compensate rate $\dot{q}$ determined from angular rate sensors 33 by minimizing the difference between actual and predicted measurements. *Id.* at 9:9–35, 10:10–65.

b. Whether Bachmann is Analogous Art

To qualify as prior art for an obviousness determination, a reference must be "analogous to the claimed invention." *In re Bigio*, 381 F.3d 1320, 1325 (Fed. Cir. 2004) (citing *In re Clay*, 399 F.2d 656, 658 (Fed. Cir. 1992)). In this instance, Patent Owner contends that Bachmann "does not qualify as analogous art and therefore cannot be used to support an obviousness challenge." PO Resp. 27. Two separate tests define the scope of analogous prior art: (1) whether the art is from the same field of endeavor, regardless of the problem addressed; and (2) if the reference is not within the field of the inventor's endeavor, whether the reference is still "reasonably pertinent to the particular problem with which the inventor is involved." *Bigio*, 381 F.3d at 1325.

With respect to the first of these tests, i.e., whether the art is from the same field of endeavor, the parties provide different characterizations of the '978 patent and of Bachmann. According to Patent Owner, the '978 patent "is fundamentally directed towards a 3D Pointing Device and a method for compensating the movements and rotations thereof," while Bachmann's field of endeavor "is motion tracking of articulated bodies." PO Resp. 27 (citing Ex. 2004 ¶ 79). With this characterization of the relative fields of endeavor of the '978 patent and Bachmann, Patent Owner argues that "[t]he field of 3D Pointing Devices presents distinct problems that technology such

as that disclosed in *Bachmann* cannot address." *Id.* In contrast, Petitioner characterizes the field of endeavor identically for both the '978 patent and Bachmann as "compensating signals of [an] orientation sensor subject to movements and rotations of [a] 3D pointing device." Reply 2 (citing Ex. 1001, 1:22–27; Ex. 1019, 21:22–22:15).

We find that Patent Owner articulates the more compelling position with respect to this test. In particular, Petitioner's articulation suffers in light of our construction of "3D pointing device" as "a device capable of sensing movement and orientation in three dimensions *to point to or control actions on a display*" (emphasis added). Petitioner contends that "Bachmann teaches controlling actions on a display" merely because changes in orientation of Bachmann's articulated object are rendered as changes in the representation of that object on a display. Reply 4–6; *see* Tr. 17:17–23 (Petitioner agreeing that an action on a display is controlled merely when "a soldier or a person, body, whatever, moves in Bachmann, the system then tracks that movement and the corresponding display element is changed").

In doing so, Petitioner tries to fit Bachmann into its characterization of the common field of endeavor it proposes, but such a fit is, at best, uncomfortable. The passive response that Bachmann describes in updating the rendering of an object that moves is different from the kind of active *control* contemplated by our adopted construction. Although Petitioner supports its position by directing our attention to cross-examination testimony of Patent Owner's expert, Dr. LaViola did not testify that a person of skill in the art would understand such a passive response to be the result of a *controlling* action. *See* Reply 5–6 (citing Ex. 1019, 112:8–113:6).

Rather, Dr. LaViola merely confirmed that, in Bachmann, the display would reflect a change in posture of its rendering of a person who changed his or her orientation.

The second test, i.e., whether Bachmann is nonetheless reasonably pertinent to the particular problem with which the inventor was involved, requires that we evaluate whether Bachmann "logically would have commended itself to an inventor's attention in considering his problem." *In re Icon Health and Fitness, Inc.*, 496 F.3d 1374, 1379–80 (Fed. Cir. 2007) (quoting *Clay*, 966 F.2d at 658). "If a reference disclosure has the same purpose as the claimed invention, the reference relates to the same problem, and that fact supports use of that reference in an obviousness rejection." *Clay*, 966 F.2d at 659.

In describing the problem faced by the inventor of the '978 patent, the "Description of the Related Art" section emphasizes certain specific perceived deficiencies with the prior art. In particular, the '978 patent asserts that "it is clear that an improved device for use in for example motion detection, computers or navigation *with enhanced calculating or comparison method* capable of accurately obtaining and calculating actual deviation angles in the spatial pointer frame is needed." Ex. 1001, 3:53–57 (emphasis added). Accordingly, the '978 patent highlights "a need to provide *an enhanced comparison method and/or model* applicable to the processing of signals of motion sensors such that errors and/or noises associated with such signals or fusion of signals from the motion[] sensors may be corrected or eliminated." *Id.* at 4:4–8 (emphasis added).

This focus on a need for an "enhanced comparison method" is confirmed by Patent Owner's characterization of the '978 patent in its

Response, as well as by Dr. LaViola's description of the '978 patent. For example, Patent Owner describes "[t]he invention [as] appl[ying] a novel 'enhanced comparison method' to reduce and compensate for errors and noise in the sensor readings that normally accumulate over time in order to better map the movements of the device and have the capability to more precisely control a display." PO Resp. 2–3 (citing Ex. 1001, 4:33–57). In his Declaration, Dr. LaViola explains that "[t]he invention of the '978 Patent corrects for such errors using its novel enhanced comparison method," an embodiment of which "can be found in Figure 10 of the '978 Patent," reproduced above. Ex. 2004 ¶ 36.

To be sure, the problem confronting the inventor of the '978 patent included other aspects beyond the need for improved error compensation, such as the need to capture full three-dimensional information and the need to output a movement pattern on a display frame. *See* Ex. 1001, 2:50–58 ("The pointing device by Liberty using a 5-axis motion sensor may not output deviation angles of the pointing device in, for example, a 3D reference frame; in other words, due to . . . the limitation of the 5-axis motion sensor of accelerometers and gyro-sensors utilized therein, the pointing device of Liberty cannot output deviation angles readily in a 3D reference frame but rather a 2D reference frame only and the output of such device having 5-axis motion sensors is a planar pattern in 2D reference frame only."); 4:8–11 ("In addition, according to the field of application, such output of deviation in 3D reference frame may too be further mapped or translated to a pattern useful in a 2D reference frame."). These complementary aspects of the overall problem faced by the inventor of the

’978 patent do not diminish the central importance of improving error compensation with an enhanced comparison method.

In arguing that Bachmann is not analogous art, Patent Owner too strongly diminishes this aspect of the problem in favor of the other aspects. *See* PO Resp. 29 (“*Bachmann* in no way addresses the problem of translating the detected motions of a handheld 3D pointing device to a movement pattern to control actions on a display.”). That is, in asserting that “*Bachmann* does not address ***the*** problem of mapping the movement and rotation of a 3D pointing device to more precisely control actions on a display,” Patent Owner obscures the fact that it also more fully characterizes the problem as follows: “The ‘978 Patent is involved with the problem of compensating for accumulated errors of signals of a 3D pointing device using a nine-axis sensor system *for the purposes of* being able to better map the dynamic movements of that pointing device onto a display and more precisely control actions on that display.” *Id.* at 30 (emphasis added). This more complete characterization discriminates between the problem confronting the inventor (“compensating for accumulated errors . . .”) and the relevance of that problem to the inventor’s overall objective (“being able to better map . . .”).

As Petitioner points out, “[t]he ‘mapping’ step . . . happens *after* the calculation of orientation using the Novel Enhanced Comparison Method.” Reply 7–8 (emphasis in original). This distinction between the problem confronting the inventor and its relevance to the overall objective is also consistent with the cross-examination testimony of Patent Owner’s expert, Dr. LaViola:

> A . . . I believe anyone of ordinary skill in the art would be able to take that orientation and map it to a 2D display, or map it as a -- whatever pattern that they would want, they would -- they would be so choose in doing.
>
> Q Is that because it's just a geometric calculation or why do you say that?
>
> A Yeah. Because it was simply just a geometric calculation.
>
> Q Doesn't the calculation, though, depend on the method you used to determine the object's orientation?
>
> A I don't see why it would.
>
> Q Are they completely uncoupled?
>
> A I mean, once you have a[n] orientation in a given coordinate system, it doesn't really matter how you got it. You simply can map that into a different coordinate system, in this case, the display coordinate system to get some type of movement pattern on the screen.

Ex. 1019, 48:10–49:2. In light of these considerations, including Dr. LaViola's cross-examination testimony, we agree with Petitioner that "'mapping' is either not part of the 'problem' with which the inventors were involved, or was a relatively *minor* part of the problem with which the inventors were involved." Reply 8 (footnote omitted).

With this understanding of the problem confronting the inventor of the '978 patent, we find that Bachmann logically would have commended itself to the inventor's attention. The filtering method illustrated in Figure 3 of Bachmann, reproduced above, illustrates collection of data from the same kinds of sensors considered in the '978 patent. *See* Ex. 1004, Fig. 3, elements 31, 32, 33. And Bachmann repeatedly comments on the ability of its method to correct for the same kinds of errors that were of concern to the inventor of the '978 patent. *See id.* at 7:10–12 ("[A]ngular velocity information can be used to correct for time lag errors."), 7:42–45 ("Unlike,

other sensors known in the art, sensor embodiments of the invention can correct for drift continuously without any requirement for still periods."), 8:29–31 ("Determination of this local gravity vector allows the local vertical to be determined allowing correction of orientation relative to a vertical axis."), 8:33–34 ("This information can be used to correct rate sensor drift errors in the horizontal plane."), 9:54–58 ("[S]uch a filtering embodiment measures angular rate information 33, and uses measurements of local magnetic field 32 and local gravity 31 to correct the angular rate information or integrated angular rate information.").

Patent Owner also asserts that the Office "has cited *Bachmann* as a reference in twenty publications during various examination proceedings" and that "[o]f these twenty publications, not a single one of them relates to a pointing device, let alone a 3D pointing device." PO Resp. 30. Although we have considered this evidence, we do not find it persuasively supportive of Patent Owner's argument that it "corroborates Dr. LaViola's opinion that a [person having ordinary skill in the art] would not have considered *Bachmann* to have logically commended itself to the problems of using a handheld pointing device to control actions on a display and compensating of accumulated sensor errors of such a device." *Id.* at 30–31 (citing Ex. 2004 ¶ 86). As Petitioner points out, that evidence lacks a "competent witness to explain how the list of results was obtained, how the evaluations were performed, and why certain patents were or were not believed to be '3D pointing devices.'" Reply 12. Rather, we agree with Petitioner that "the Board is in a better position to judge whether Bachmann qualifies as analogous art based on Bachmann's actual disclosure and CyWee's

admissions, without relying on proxy evidence, of dubious origin, that leaves so much up to the vagaries of circumstance." *Id.*

Because Bachmann logically would have commended itself to the attention of the inventor of the '978 patent, we find that Bachmann is analogous art to the '978 patent, and therefore available as prior art to the challenges of claims 10 and 12.

E. Combination of Zhang and Bachmann

Petitioner challenges claims 10 and 12 as unpatentable under 35 U.S.C. § 103(a) over Zhang and Bachmann. Pet. 18–60.

1. Rationale for Combining Teachings

As Petitioner summarizes, its proposed "combination of Zhang and Bachmann, broadly speaking, uses *Zhang's 3D pointing device* together with *Bachmann's extra sensors and method for compensating rotations*." *Id.* at 19. As indicated by this summary statement, there are two principal aspects to the manner in which Petitioner proposes to combine the teachings of Zhang and Bachmann. First, Petitioner proposes to "add sensors to Zhang, including the angular rate sensors of Bachmann." *Id.* at 31. Second, Petitioner proposes "to use Bachmann's quaternion-based filter techniques" in calculating orientations. *Id.* at 33. We address each aspect in turn.

a. Addition of Sensors

With respect to the addition of sensors to Zhang, we noted above in our summary of Zhang's disclosure that Zhang expressly teaches the use of sensors that detect the device's yaw and pitch, and explains that

"[a]dditional sensors (not shown in the picture) could be used to detect device's roll angle which may provide an additional dimension of control." Ex. 1005 ¶ 25. Petitioner relies on this statement as an "express suggestion" of adding additional sensors to Zhang, and further contends that "a person of ordinary skill would have understood that additional sensors, and additional types of sensors, would have yielded at least two benefits." Pet. 31.

Supported by testimony of Dr. Sarrafzadeh, Petitioner identifies one of these benefits as "allow[ing] the device to detect different modes of movement, for example a roll angle, thus better allowing the device to translate user movements to display operations." *Id.* (citing Ex. 1002 ¶ 94). Also supported by testimony of Dr. Sarrafzadeh, Petitioner identifies the other benefit as "increas[ing] the overdetermination (the amount of information beyond that necessary to determine orientation), which in turn would have enabled better error and noise control." *Id.* (citing Ex. 1002 ¶ 94). Petitioner supplements this reasoning with the contention that Bachmann's nine-axis sensors were well-known in the art in the relevant timeframe: "Bachmann, which issued in 2006, states that magnetic, angular rate and gravitational (acceleration) sensors were known in the art as MARG sensors, were already commercially available, and could be integrated in a known fashion." *Id.* at 31–32 (citing Ex. 1004, 14:37–57; Ex. 1002 ¶ 96).

These aspects of Petitioner's reasoning are persuasive. It is clear from Petitioner's identified evidence that nine-axis sensors that detect yaw, pitch, and roll were known at the relevant time, and we agree that Zhang includes a specific teaching to extend its disclosure beyond yaw and pitch by also including sensors that detect roll.

Less persuasive is another aspect of Petitioner's argument, namely that "Bachmann further states that its sensors and filter are applicable to hand-held devices (like Zhang's)." *Id.* at 32–33 (citing Ex. 1004, 13:42–48; Ex. 1002 ¶ 97). Although it is true that Bachmann asserts that "[s]ensors constructed in accordance with the principles of the present invention can be used to track motion and orientation of simple rigid bodies," examples of which include "hand-held devices," the context of that assertion diminishes the persuasive weight of Petitioner's argument. *See* Ex. 1004, 13:42–48.

In making that assertion, Bachmann includes "hand-held devices" in a list that also includes "swords, pistols, and simulated weapons." *Id.* at 13:48. And Bachmann elsewhere explains that "[w]here the movement being tracked is that of a non-magnetic simple rigid body (e.g., a simulated rifle or some like implement) the system is simplified, perhaps requiring only a single sensor 401 to track the motion of the rifle." *Id.* at 14:25–29. While Bachmann is not entirely clear, this context more greatly supports Patent Owner's position that Bachmann "merely contemplates mounting its sensor systems on props for motion tracking; it does not teach incorporating its sensor systems into other electronic devices." Sur-reply 2.

Further context is provided by Bachmann's qualification that the motion and orientation of rigid bodies can be tracked with its sensors "as long as they are made of non-magnetic materials." Ex. 1004, 13:43–47. In its Sur-reply, Patent Owner argues that this qualification amounts to "expressly teach[ing] away" from using Bachmann's sensor system on any

rigid bodies made of magnetic material. Sur-reply 2–3.[19] Bachmann does not clearly explain the basis for its qualification, but Dr. LaViola agreed on cross-examination that "[t]he concern is interference" because "[m]agnetic material would potentially distort the magnetic field, giving you false data from the magnetometer." Ex. 1043, 84:6–15; *see also id.* at 146:15–147:5 (additional testimony that magnetic materials would potentially distort the magnetic field).

Dr. Sarrafzadeh addressed this concern, focusing on Bachmann's assertion that the rigid bodies not be "made of" non-magnetic materials. Ex. 1044 ¶¶ 5–12. According to Dr. Sarrafzadeh, "'[m]ade of' is a strong statement, and implies a device encased in a magnetic housing or similar." *Id.* ¶ 7. In making this statement, Dr. Sarrafzadeh addresses Bachmann's express identification of "non-magnetic prosthetic devices, robot arms, or other machinery" and of "hand-held devices, swords, pistols, or simulated weapons" by explaining that "[w]hile such devices . . . can have steel in them, and in some cases nearly always have steel in them (pistols, robotic

[19] Petitioner contends that this argument is an improper new argument made for the first time in Patent Owner's Sur-reply, but concedes that essentially the same argument made in Patent Owner's Reply to its Motion to Amend is proper. Tr. 29:6–10. We agree with Petitioner that the Sur-reply argument is improper because no form of it was advanced in Patent Owner's Response. Nevertheless, we address the argument both because essentially the same argument is proper in this proceeding in a different context and because our consideration of the argument ultimately does not disadvantage Petitioner. *See CBS Interactive, Inc. v. Helferich Pat. Lic., LLC*, IPR2013-00033, Paper 79, 3 (PTAB Aug. 9, 2013) ("Should there be improper arguments or evidence presented with a reply, the Board, *exercising its discretion, may* exclude the reply and related evidence in their entirety, or alternatively, decline to consider the improper arguments and/or related evidence.") (emphasis added).

arms, machinery), they are not 'made of' magnetic material in the sense explained by Bachmann." *Id.* Dr. Sarrafzadeh thus reconciles Bachmann's disclosure in a manner that supports his opinion that "it is clear . . . that Bachmann's reference to [a] device 'made of non-magnetic materials' means that . . . the device should not be 'made of' materials that produce a significant magnetic field, relative to the Earth's magnetic field." *Id.* ¶ 6. We accordingly credit Dr. Sarrafzadeh's opinion, and conclude that Bachmann does not teach away from adding sensors to devices that may include magnetic material, provided such devices are not "made of" magnetic material in the sense Dr. Sarrafzadeh articulates.

Patent Owner also disputes Petitioner's showing by contending that the proposed combination of Zhang and Bachmann "would require undue experimentation to create an operable device." PO Resp. 32 (citing Ex. 2004 ¶ 88). According to Patent Owner, "mounting *Bachmann*'s additional sensors to *Zhang*'s [printed circuit board] would require a level of skill greater than that possessed by a [person having ordinary skill in the art] at the time of invention." *Id.* In making this argument, Patent Owner describes the mounting of additional sensors as "likely requir[ing]" an "extensive redesign" of Zhang's printed circuit board to accommodate strategic placement of Bachmann's sensors. *Id.* Patent Owner asserts that "it is possible" Zhang's printed circuit board would ultimately "be very different" if Bachmann's sensors were added and that the printed circuit board "would essentially have to be re-fabricated." *Id.* at 32–33. Doing so, Patent Owner states, would have been beyond the capabilities of a person of ordinary skill in the art at the time of invention. *Id.* at 33.

Although Patent Owner supports this line of reasoning with testimony by Dr. LaViola, we find it unpersuasive. *See* Ex. 2004 ¶ 88. In particular, we agree with Petitioner that Patent Owner's reference to "undue experimentation" suggests that Patent Owner is advancing a form of an enablement argument. *See* Reply 25. But Patent Owner has not systematically addressed the factors set forth in *In re Wands*, 858 F.2d 731 (Fed. Cir. 1988), which reflect that whether "undue experimentation" is required "is not a single, simple factual determination, but rather is a conclusion reached by weighing many factual considerations." *ALZA Corp. v. Andrx Pharms., LLC*, 603 F.3d 935, 940 (Fed. Cir. 2010).

In this instance, our adopted level of ordinary skill in the art includes an "undergraduate degree in computer science, electrical engineering, mechanical engineering, or other related technical field, and knowledge of sensor systems [and] mobile computing technologies." Petitioner points out that the disclosure of Zhang "rel[ies] on ordinary skill for designing a circuit board in exactly the same way that the '978 patent does." Reply 25. We also agree with Petitioner that, on cross-examination, Dr. LaViola admitted that the disclosure in the '978 patent is sufficient to enable the claims, and that "the patent-at-issue and the prior art provide the same level of disclosure." *Id.* at 25–27 (citing Ex. 1019, 84:21–85:9, 88:8–89:25, 91:9–93:15). That is, both the '978 patent and Zhang describe the physical layout of sensors at a high level, with what Petitioner characterizes as "a cartoon-like disclosure," *id.* at 25, with Dr. LaViola agreeing that Figure 3 of the '978 patent "bears a resemblance" to Figure 3 of Zhang. Ex. 1019, 122:14–123:18.

To summarize, Petitioner's overall argument regarding the addition of sensors to Zhang is persuasive in particular light of Zhang's express teaching to extend its disclosure beyond yaw and pitch by including sensors that detect roll. Although we do not find the aspect of Petitioner's argument that Bachmann explicitly applies to handheld devices to be strongly supportive of its overall argument, we also do not find that weakness fatal in light of other aspects of the complete argument.

b. Use of Quaternion-Based Filter Techniques

With respect to the use of Bachmann's quaternion-based filter techniques in calculating orientation, Petitioner contends that it would have been obvious to use those techniques with Zhang's device "because those filter techniques were adapted directly to MARG sensors." Pet. 33 (citing Ex. 1004, 7:18–45; Ex. 1002 ¶ 99). Petitioner supports that contention with testimony by Dr. Sarrafzadeh, who opines that "a person of ordinary skill in the art would have understood that Bachmann's quaternion-based filter processing is computationally more efficient than processing that uses spatial (e.g., Euler) angle calculations," and that such processing "also avoid[s] singularities that might otherwise occur at certain sensor orientations." Ex. 1002 ¶ 99. Dr. Sarrafzadeh summarizes by asserting that "a person of ordinary skill would have been motivated to use Bachmann's quaternion-based filter processing with a nine-axis MARG sensor because (1) that was its intended use and (2) it performed better than the alternatives." *Id.* ¶ 100.

Patent Owner disputes this reasoning in the same way discussed above in connection with the addition of sensors to Zhang, particularly that

Bachmann "expressly teaches away from using its . . . fusion method on any rigid bodies made of magnetic materials." Sur-reply 2. This argument is not persuasive for the same reasons we explain above.

Patent Owner similarly interweaves its sensor-addition and quaternion-method arguments against effecting the combination of Zhang and Bachmann by arguing that both Zhang and Bachmann are both "complete solution[s]" to their respective problems. *See* PO Resp. 31–32. That is, Patent Owner contends that Zhang "is designed to function as a two-dimensional pointing device that controls a cursor on a two-dimensional reference frame," and therefore "does not need to sense orientation and movement along a third spatial axis." *Id.* at 31. And Patent Owner contends that Bachmann is designed to solve the problem of three-dimensional tracking of an articulated body, such that it "cannot and does not need to point to or control any actions on a display." *Id.* at 31–32.

But as Petitioner points out, although Zhang recommends extending its disclosure to other sensors, it does not disclose a method for filtering sensor outputs and calculating orientation when additional sensors are used, "meaning that a person of skill in the art would seek to use a known method before adding sensors." Reply 24. We agree with Petitioner's reasoning.

c. Summary

Based on these considerations, we find that Petitioner articulates sufficient reasoning, with rational underpinning, to effect the combination it proposes. Moreover, a person of skill in the art in the relevant timeframe would have been able to implement the combination and would have had a reasonable expectation of success. Sensors of the type described by

Bachmann were readily available on the commercial market, and Dr. Sarrafzadeh testifies that "a person of ordinary skill would have been able to integrate these sensors into Zhang's device "using standard amplifiers, filters, samplers, and analog-to-digital converters, adjusting as necessary." Ex. 1002 ¶ 106.

Dr. Sarrafzadeh also testifies that "Bachmann's filter processing could have been executed by programming a commercially available, off-the-shelf microcontroller or other processor using only ordinary skill." *Id.* ¶ 107. Indeed, we agree with Petitioner that, because the '978 patent does not explain how to implement its sensor within appropriate circuits or its mathematics within appropriate software in any detail, acts as an admission that such details were within the knowledge of one of ordinary skill. Pet. 38; *In re Epstein*, 32 F.3d 1559, 1568 (Fed. Cir. 1994) ("[T]he Board's observation that appellant did not provide the type of detail in his specification that he now argues is necessary in prior art references supports the Board's finding that one skilled in the art would have known how to implement the features of the references.").

2. Objective Indicia of Nonobviousness

In its Sur-reply, Patent Owner infers certain limits to what the inventor of Bachmann was able to achieve. First, Patent Owner asserts that "Bachmann himself could not figure out how to apply a sensor system and sensor fusion method to systems that use magnetic materials." Sur-reply 6. Second, Patent Owner asserts that, despite acknowledging that extended Kalman filters would be more effective than the techniques used by Bachmann, "Bachmann was unable to apply [extended Kalman filters] in his

invention because of the complexity presented, thus leaving the application of [extended Kalman filters] for motion tracking and error minimization to future work." *Id.* (citing *ZTE (USA), Inc. v. CyWee Group Ltd.*, IPR2019-00143, Ex. 1014, 94, 101). Patent Owner combines these inferences with its further assertion that "[t]here is no evidence that any [person having ordinary skill in the art] ever attempted to combine or contemplated combining *Bachmann*'s sensor fusion with a 3D pointing device" to argue that "[t]he evidence therefore shows that there was a long felt need and failure by others to build a 3D Pointing Device utilizing such a fusion method." *Id.* at 7.

There are multiple problems with these arguments. First, the arguments were not previously raised in Patent Owner's Response, and are therefore new arguments not entitled to consideration. *See Ericsson Inc. v. Intellectual Ventures I LLC*, 901 F.3d 1374, 1379 (Fed. Cir. 2018) ("Under PTO regulations, the Board is entitled to strike arguments improperly raised for the first time in a reply."). Second, we do not find either argument persuasive based on the evidence Patent Owner presents. As discussed above, the evidence does not suggest that a person of ordinary skill in the art would have considered Bachmann's sensor-fusion method incompatible with materials found in Zhang's pointing device. *See supra* part III.E.1.a. We also determine that the challenged claims do not require the use of an extended Kalman filter. Thus, the claimed invention does not address the long-felt need that Patent Owner alleges. *See Sjolund v. Musland*, 847 F.2d 1573, 1582 (Fed. Cir. 1988) ("[W]e are constrained . . . to consider whether the *claimed invention* satisfied a long felt need, or solved problems where others had failed. Because the [asserted long-felt need] is not part of [the]

claimed invention, the advantages ascribed to [it] are irrelevant in terms of the obviousness analysis.”).

For these reasons, a preponderance of the evidence weighs against Patent Owner’s argument there was a long-felt need to build a three-dimensional pointing device using an enhanced fusion method.

3. Independent Claim 10

Petitioner provides a detailed discussion that maps the limitations of independent claim 10 to the combination of Zhang and Bachmann. Pet. 40–60. In addressing the preamble, i.e., “[a] method for compensating rotations of a 3D pointing device,” Petitioner identifies Zhang’s handheld pointing device 100 as a “3D pointing device.” *Id.* at 40. Patent Owner disputes this identification “because it cannot detect the full orientation of the pointing device in three-dimensional space.” PO Resp. 33. According to Patent Owner, Bachmann “likewise fails to disclose a 3D pointing device” because “the signals measured by the sensors in *Bachmann* are not mapped onto a display screen for the purposes of pointing or controlling anything on the display screen.” *Id.* at 35.

Patent Owner’s argument is not persuasive because it attacks the references individually, without addressing the combination. *See In re Keller*, 642 F.2d 413, 421 (Fed. Cir. 1981) (“[O]ne cannot show non-obviousness by attacking references individually where, as here, the rejections are based on combinations of references.”). As Petitioner asserts in its Reply, “[i]n the combination, Bachmann’s sensors and attitude estimation filter are used in Zhang’s device.” Reply 14 (citing Pet. 19, 29–30). Petitioner makes this point in its Petition in contending that “it would

further have been obvious to use Zhang with three sets of three types of sensors (rotational velocity, axial acceleration and magnetism) to improve the determination of orientation in **three-dimensional** space." Pet. 40. Because the combined system detects orientation in all three spatial axes, we agree with Petitioner that "*the combination* certainly is a 3D pointing device." Reply 14.

With respect to the preamble's recitation that the recited method is "for compensating rotations" of the 3D pointing device, such a purpose is achieved with the specific steps recited in the remainder of the claim. *See* Pet. 41 ("The combination discloses a **method of compensating rotations** of the device, as described in steps [10b]-[10h], below."). Thus, with respect to the recitation of "generating an orientation output associated with an orientation of the 3D pointing device associated with three coordinate axes of a global reference frame associated with Earth," Petitioner identifies Bachmann's orientation quaternion $\hat{q}$ (shown in the lower right of Bachmann's Figure 3, reproduced *supra* p. 53) as the required "orientation output." *Id.*

Petitioner further explains that, in the combined system, Bachmann's orientation quaternion $\hat{q}$ is associated with an orientation of the pointing device because Bachmann teaches that $\hat{q}$ "is a quaternion representation of the orientation of the tracked object." *Id.* at 42 (quoting Ex. 1004, 10:10–14). And $\hat{q}$ is also associated with three coordinate axes of a global reference frame associated with Earth because $\hat{q}$ describes the rotation between a sensor frame of reference to an Earth coordinate system with roll, pitch, and yaw. *Id.* Petitioner specifically observes that the orientation represented by $\hat{q}$ can be expressed in terms of Euler angles, which are

expressly shown in Figure 2(a) of Bachmann as relative to the Earth-based directions of "EAST," "NORTH," and "DOWN." *Id.* at 42–43 (citing Ex. 1004, 5:50–61). We agree with this analysis, which Patent Owner does not dispute.

For the claim's requirement of "generating a first signal set comprising axial accelerations associated with movements and rotations of the 3D pointing device in the spatial reference frame," Petitioner identifies the accelerometer measurements at block 31 in Figure 3 of Bachmann, reproduced *supra* p. 53. *Id.* at 46. Bachmann explains that "accelerometers 31 can be used to determine the local gravity vector by measuring the combination of forced linear acceleration and the reaction force due to gravity." Ex. 1004, 8:2–5. Petitioner accordingly reasons that, because the total acceleration vector $\vec{a}_{measured}$ thus comprises forced linear acceleration, the signals set comprises axial accelerations associated with movements and rotations of the device. Pet. 46. Petitioner additionally reasons that gravitational accelerations are also "accelerations associated with movements and rotations of the 3D pointing device" because rotation of the device alters the linear acceleration along each axis. *Id.* Petitioner further addresses the requirement that the accelerations be in the spatial reference frame by noting that "the sensors are mounted to the pointer, and the orientation of the sensors (and thus their axes of sensing) move and rotate with the movements and rotations of the pointer." *Id.* at 47.

Petitioner supports this reasoning with testimony by Dr. Sarrafzadeh. Ex. 1002 ¶¶ 125–127. In light of this support, and the fact that Patent Owner does not dispute this reasoning, we find that Petitioner makes a sufficient showing.

In addressing the claim's requirement of "generating a second signal set associated with Earth's magnetism," Petitioner identifies the magnetometer measurements at block 32 in Figure 3 of Bachmann, reproduced above. Pet. 47–48. Petitioner specifically observes that the local magnetic field vector is "associated with Earth's magnetism" in light of Bachmann's general disclosure of local magnetic field vectors measured relative to the Earth. *Id.* at 48–49 (citing Ex. 1004, 5:11–20, Fig. 1). Petitioner supports this identification with testimony by Dr. Sarrafzadeh, which is not disputed by Patent Owner. Because we agree with Petitioner's identification in light of this evidence, we find that Petitioner makes a sufficient showing.

The claim also requires "generating the orientation output based on the first signal set, the second signal set and the rotation output or based on the first signal set and the second signal set." Ex. 1001, 37:5–8. Petitioner's analysis of this limitation is sufficient because the orientation output $\hat{q}$ is based on both $\vec{a}_{measured}$ and the magnetometer data, which respectively correspond to the first and second signal sets. *See* Pet. 49–50. This is evident from the calculation flow illustrated in Figure 3 of Bachmann, which shows paths that incorporate both accelerometer and magnetometer date in the calculation of orientation output $\hat{q}$. *See* Ex. 1004, Fig. 3. That is, both first signal set $\vec{a}_{measured}$ and second signal set (b_1, b_2, b_3) are filtered, compared to predicted measurements $\bar{y}(\hat{q})$ to generate a correction $\dot{q}_{\varepsilon}$ that is added to rate quaternion $\dot{q}$. *Id.* at 9:9–35, 10:15–11:12. The corrected rate quaternion is then integrated and normalized to provide orientation output $\hat{q}$. This analysis, which addresses the limitation's second alternative that the orientation output be "based on the first signal set and the second signal set,"

is supported by the testimony of Dr. Sarrafzadeh, and not disputed by Patent Owner. Ex. 1002 ¶¶ 131, 132.

In addition, Petitioner addresses the limitation's first alternative that the orientation output is additionally based on the rotation output by drawing a correspondence between the recited "rotation output" and the angular-rate measurements depicted at block 33 of Bachmann's Figure 3. Pet. 51–52. As Petitioner asserts, angular-rate measurements are converted to rate quaternion $\dot{q}$, to which correction $\dot{q}_{\varepsilon}$ is added as noted above, before integration and normalization to provide orientation output $\hat{q}$. *Id.* at 52. This additional analysis is also supported by the testimony of Dr. Sarrafzadeh, and not disputed by Patent Owner. Ex. 1002 ¶¶ 134–135. We thus find that Petitioner makes a sufficient showing for this limitation under either alternative.

Petitioner relies on the same angular-rate measurements in addressing the claim's further limitation of "generating a rotation output associated with a rotation of the 3D pointing device associated with three coordinate axes of a spatial reference frame associated with the 3D pointing device." Pet. 53. Bachmann discloses the use of a "three-axis" angular rate sensor, and Petitioner reasons that the respective axes correspond to the three coordinate axes of the spatial reference frame of the pointing device in the combination of Zhang and Bachmann. *Id.* (citing Ex. 1002 ¶ 138). This reasoning is not only supported by the testimony of Dr. Sarrafzadeh, but also by Bachmann's express disclosure that the angular rates are "measured in the sensor reference frame." Ex. 1004, 10:17–30. Patent Owner does not dispute this reasoning, and we find that Petitioner makes a sufficient showing.

The claim further requires "using the orientation output and the rotation output to generate a transformed output associated with a fixed reference frame associated with a display device, wherein the orientation output and the rotation output is generated by a nine-axis motion sensor module." Ex. 1001, 37:13–17. Petitioner draws a correspondence between the recited "nine-axis motion sensor module" and Bachmann's three-axis accelerometer 31, three-axis magnetometer 32, and three-axis angular rate sensor 33: "Three sensor types times three axes each yields a nine-axis module." Pet. 54. Petitioner addresses generating the transformed output for a display device by pointing to Bachmann's suggestion of transforming its orientation output to the coordinate system of a display device and Zhang's express disclosure of such a transformation for Zhang's device. *Id.* at 54–55.

Petitioner further addresses the limitation by contending that, in the combination of Zhang and Bachmann, "it would have been obvious to generate a transformed output associated with a fixed reference frame associated with a display device." *Id.* at 54 (emphasis omitted). In particular, Petitioner relies on explicit disclosure in Zhang of transforming data from the frame of reference of the pointing device into screen coordinates. *Id.* at 54–55 (discussing Ex. 1005 ¶ 30). Supported by testimony of Dr. Sarrafzadeh, Petitioner reasons that would have been obvious to use Bachmann's orientation output $\hat{q}$ and rotation output (p, q, r) in performing the transformation described by Zhang. *Id.* at 55 (citing Ex. 1002 ¶ 143).

Patent Owner does not dispute the transformation aspect of Petitioner's analysis outside of its arguments that one of skill in the art

would not have combined the teachings of Zhang and Bachmann as Petitioner proposes, and which we address above. Rather, Patent Owner disputes that Bachmann discloses a "nine-axis motion sensor module." PO Resp. 36–38. In doing so, Patent Owner emphasizes Bachmann's assertion in describing an example of a "suitable sensor device" that "[t]he individual components can be integrated using a single integrated circuit board *with the accelerometers mounted separately*." Ex. 1004, 14:37–51 (emphasis added). According to Patent Owner, the '978 patent "teaches that its various three-axis sensors are mounted in close proximity to one another on the same [printed circuit board]." PO Resp. 36 (citing Ex. 1001, 13:5–47, Fig. 6; Ex. 2004 ¶ 97). Patent Owner's position is that the statement in Bachmann is inconsistent with such a teaching: "Because *Bachmann*'s accelerometers are not attached to its circuit board, the reference does not disclose 'a nine-axis motion sensor module.'" *Id.* at 37 (citing Ex. 2004 ¶ 100).

Patent Owner's position is problematic for multiple reasons. First, Patent Owner has proposed no explicit construction of "module" that would require close proximity on a single circuit board. And, as Petitioner points out, such a construction would "introduce[] additional, impermissible vagueness to the claim" because the '978 patent provides no objective criteria by which to assess "close proximity." *See* Reply 15.

Second, we agree with Petitioner that "the '978 patent simply does not describe the term 'module' as restrictively as CyWee suggests." *Id.* Figure 6 of the '978 patent, which Patent Owner cites to support its position, is reproduced below.

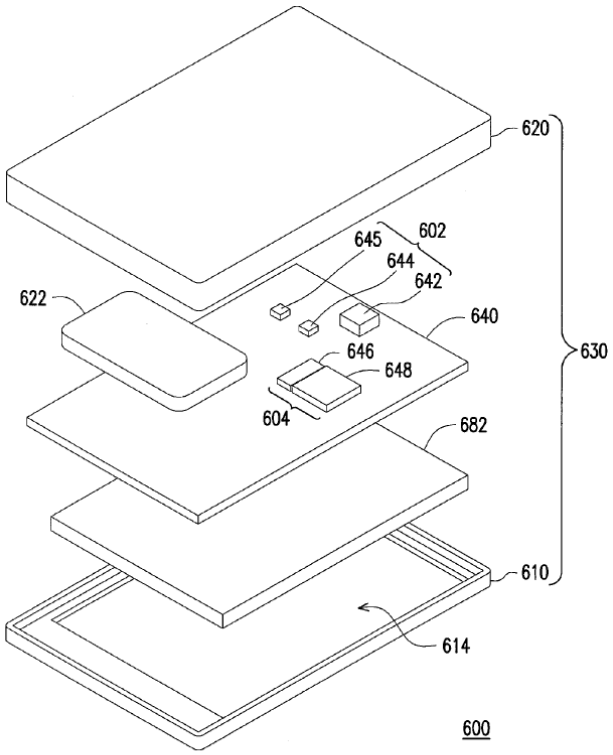

FIG. 6

Figure 6 is an exploded diagram showing a 3D pointing device "utilizing a nine-axis motion sensor module." Ex. 1001, 13:5–9. As Petitioner points out, rotation sensor 642, accelerometer 644, and magnetometer 645—which are all part of nine-axis motion sensor module 602—appear to be mounted separately on printed circuit board 640, each within a separate housing. *See* Reply 16. The same is true in Figure 3 of the '978 patent, reproduced *supra* p. 4, for rotation sensor 342, accelerometer 344, and magnetometer 345.

Petitioner explored the meaning of "module" with Patent Owner's expert, Dr. LaViola, on cross-examination. Ex. 1019, 94:1–98:14. At times, Dr. LaViola appeared to suggest that components of a hardware "module" would need to be within a common housing so that they could be mounted at the same time. *See id.* at 95:15–17 ("So, you would have a sensor module

which contained the sensors, in its own little, like, piece. And then you would take that piece and stick it on the board."), 96:24–97:5 (testifying that the three sensors could be separate, but within their own housing that could be placed on the board and wired at one as opposed to three separate times). But as Petitioner acknowledges, "Dr. LaViola immediately backed off his 'same housing' interpretation, testifying that it was not a limitation of claim 10." Reply 18 (citing Ex. 1019, 97:6–16). We give particular weight, though, to Dr. LaViola's redirect examination in which whatever ambiguity may have arisen during cross-examination was resolved. *See* Ex. 1019, 131:14–132:11. Specifically, Dr. LaViola testified on redirect examination that, with "the components mounted separately to the same [printed circuit board]," he would nonetheless "consider it a nine-axis motion sensor." *Id.* at 132:6–11.

In light of this evidence, including the graphical depictions in the drawings of the '978 patent as well as Dr. LaViola's testimony, we find insufficient support for Patent Owner's position. That is, the mere fact that Bachmann describes "the accelerometers mounted separately" is insufficient to distinguish the set of three-axis accelerometer 31, three-axis magnetometer 32, and three-axis angular rate sensor 33 from a "nine-axis motion sensor module." In making this finding, we also note that Dr. LaViola conceded that Bachmann's statement is ambiguous. *See* Ex. 1019, 129:4–10 ("I think that it's a fairly ambiguous sentence. I'm not 100 percent clear if they mean on a separate board or mounted separately on the circuit board at some distance from the other sensors."). We accordingly find that Petitioner makes a sufficient showing with respect to this limitation.

Finally, the claim recites "obtaining one or more resultant deviation including a plurality of deviation angles using a plurality of measured magnetisms Mx, My, Mz and a plurality of predicted magnetism Mx′, My′ and Mz′ for the second signal set." Ex. 1001, 37:17–21. Petitioner addresses two specific aspects of this limitation. First, Petitioner contends that it would have been obvious to "include a plurality of deviation angles" because "it would have been obvious to convert [Bachmann's] orientation output quaternion, $\hat{q}$, into the 'conventional' form of Euler angles (roll, pitch and yaw), which are more intuitive to human users." Pet. 57. Petitioner supports this contention, which is not disputed by Patent Owner, with testimony by Dr. Sarrafzadeh, as well as by noting Bachmann's express disclosure that "[a] conventional way of describing the orientation of a rigid body uses 'Euler angles' to describe the orientation of a rigid body in three dimensions." *See* Ex. 1002 ¶¶ 144–145; Ex. 1004, 5:50–52.

Second, Petitioner identifies Bachmann's second signal set (b_1, b_2, b_3), i.e., data obtained from Bachmann's magnetometers shown in block 32 of Bachmann's Figure 3, as corresponding to the recited "plurality of measured magnetisms Mx, My, Mz." Pet. 57–58. And Petitioner further identifies components of Bachmann's computer measurement vector $\bar{y}(\hat{q})$, shown in block 35 of Bachmann's Figure 3, as corresponding to the recited "plurality of predicted magnetism Mx′, My′ and Mz′." *Id.* In particular, Petitioner observes that computer measurement vector $\bar{y}(\hat{q})$ contains both predicted accelerations (h_1, h_2, h_3) and predicted magnetisms (b_1, b_2, b_3). *Id.* at 58–59.

Patent Owner disputes[20] the second aspect of Petitioner's showing by (1) observing that "[i]n the '978 Patent, the measured and predicted magnetisms are measured at current time T, whereas the previous state is obtained at an earlier time T-1"; and (2) arguing that Bachmann "does not teach calculating the predicted magnetisms using information from the current state at time T, as required by claim 10." Sur-reply 5 (citing Ex. 1001, 23:9–34, Fig. 10). This argument is not persuasive because it improperly reads in a further limitation that is not recited in the claim. That is, we agree with Petitioner that "[t]he claim has no limitation that would prevent calculating predicted magnetism using information from earlier times." Sur-reply Amend 11. In making the argument, Patent Owner cites the paragraph at column 23, lines 9–34 of the '978 patent, which describes an embodiment in which the prediction is made for time T. But we agree with Petitioner that "[t]he cited passage does not reflect [Patent Owner's] more limiting argument, namely that the prediction *is calculated* using only information collected at time T." *Id.* (footnote omitted).

We conclude that Petitioner shows, by a preponderance of the evidence, that independent claim 10 is unpatentable under 35 U.S.C. § 103(a) over Zhang and Bachmann.

---

[20] Similar to Patent Owner's argument that Bachmann is not analogous art because it qualifies its disclosure as applied to non-magnetic materials, Patent Owner only raises its argument for this limitation for the first time in its Sur-reply. The argument is therefore improper because no form of it was advanced it Patent Owner's Response. Nevertheless, we also address this argument because essentially the same argument was properly made in Patent Owner's Reply to its Motion to Amend and because our consideration of the argument ultimately does not disadvantage Petitioner. *See CBS Interactive*, IPR2013-00033, Paper 79, 3.

4. Dependent Claim 12

For claim 12, which depends from claim 10 and recites that "the orientation output is . . . a quaternion," among other disjunctively recited possibilities, Petitioner relies on the fact that Bachmann's use of quaternions, specifically of orientation quaternion $\hat{q}$. Ex. 1001, 37:36–38; Pet. 60 (citing Ex. 1004, 10:12–14; Ex. 1002 ¶ 151). We agree with this identification and therefore conclude that Petitioner shows, by a preponderance of the evidence, that claim 12 is unpatentable under 35 U.S.C. § 103(a) over Zhang and Bachmann.

G. Combination of Liberty and Bachmann

Petitioner challenges claims 10 and 12 as unpatentable under 35 U.S.C. § 103(a) over Liberty and Bachmann. Pet. 60–83. In doing so, Petitioner points to Liberty's broad disclosure that its "handheld system senses motion using or more sensors 901, e.g., rotational sensor(s), gyroscopes(s), accelerometer(s), magnetometer(s), optical sensor(s), camera(s) or any combination thereof." *Id.* at 68; Ex. 1006, 16:38–44; *see also* Ex. 1006, 18:30–33, 19:62–20:12. Petitioner uses this disclosure to construct an argument that largely parallels its arguments for the combination of Zhang and Bachmann.

1. Rationale for Combining Teachings

For example, Petitioner's summary of its rationale for combining the teachings of Liberty and Bachmann is similar to its rationale for combining the teachings of Zhang and Bachmann: "The combination of Liberty and Bachmann uses *Liberty's 3D pointing device* together with *Bachmann's*

extra sensors and method for compensating rotations." Pet. 61. As for the combination of Zhang and Bachmann, Petitioner thus addresses two principal aspects of the combination, namely "to add sensors to Liberty, including the additional sensors of Bachmann," and "to use Bachmann's quaternion-based filter techniques." *Id.* at 68–69, 69–70.

With respect to the former, i.e., addition of Bachmann's sensors to Liberty, Petitioner identifies the same benefits to such additional sensors as in its Zhang-Bachmann combination, namely detection of different movement modes, such as roll angle, and increased overdetermination for error and noise control. *Id.* at 68–69 (citing Ex. 1002 ¶ 160). Petitioner also asserts that "Liberty expressly states that additional sensors can be used, and in particular, that magnetometer sensors can be used." *Id.* at 68 (citing Ex. 1006, 16:38–44, 18:29–33, 19:62–20:12; Ex. 1002 ¶ 159). Although the strength of such a suggestion is weaker in Liberty than in Zhang, we find sufficient Petitioner's identification of Liberty's teaching that "[a] variety of different sensors could be employed as long as they measure motion with respect to the body of the device." *See* Ex. 1006, 18:30–32. In providing such a teaching, Liberty specifically identifies "[e]xemplary sensors" as including "accelerometers, rotational sensors, gyroscopes, magnetometers, and cameras." *Id.* at 18:32–33. Petitioner thus provides sufficient support for its argument that it would have been obvious to substitute the five-axis sensor module expressly disclosed by Liberty with a nine-axis sensor module like that taught by Bachmann. *See* Pet. 65. Furthermore, Petitioner supports its contentions with testimony by Dr. Sarrafzadeh, which we credit. *See* Ex. 1002 ¶¶ 159–160.

With respect to the latter, i.e., using Bachmann's quaternion-based filter techniques in calculating orientation, Petitioner contends that it would have been obvious to use those techniques with Liberty's device "because those filter techniques were adapted directly to MARG sensors." Pet. 69–70 (citing Ex. 1004, 7:18–45; Ex. 1002 ¶ 162). Petitioner supports that contention with testimony by Dr. Sarrafzadeh, who opines that "[a] person of ordinary skill in the art would have been motivated to use Bachmann's filter techniques in part because they are computationally more efficient and avoid singularities that plague other techniques." Ex. 1002 ¶ 162.

Patent Owner disputes the sufficiency of Petitioner's showing in a manner similar to the arguments it advances against the combination of Zhang and Bachmann, namely by arguing that Liberty and Bachmann are already "complete solution[s]" to their respective problems, and that mounting Bachmann's additional sensors to Liberty's printed circuit board would require a level of skill greater than that possessed by a person having ordinary skill in the art at the time of invention. PO Resp. 38–40. These arguments are no more persuasive when applied to the combination of Liberty and Bachmann than they are applied to the combination of Zhang and Bachmann because the same essential aspects are present in both combinations: like Zhang, Liberty includes a suggestion to extend its

disclosure with additional sensors; and like Zhang, Liberty relies on ordinary skill for designing a circuit board in the same way as the ’978 patent.[21]

We accordingly conclude that Petitioner articulates sufficient reasoning, with rational underpinning, to effect the combination of Liberty and Bachmann that it proposes.

2. Objective Indicia of Nonobviousness

Although we have considered Patent Owner’s argument that there was a long-felt need to build a three-dimensional pointing device using an enhanced fusion method in the context of the combination of Liberty and Bachmann, we find that argument unpersuasive for substantially the same reasons we discuss in the context of the combination of Zhang and Bachmann. *See* Sur-Reply 6. That is, Patent Owner is untimely in raising the argument. In addition, the evidence does not suggest that a person of ordinary skill in the art would have considered Bachmann’s sensor-fusion method incompatible with materials found in Zhang’s pointing device, and the challenged claims do not require the use of an extended Kalman filter. Because the claimed invention does not address the long-felt need that Patent Owner alleges, we find that a preponderance of the evidence weighs against Patent Owner’s argument of a long-felt need to build a three-dimensional pointing device using an enhanced fusion method.

[21] In the context of a combination of Liberty and Bachmann, we have also considered Patent Owner’s argument that Bachmann “teaches away from using its sensor system and fusion method on any rigid bodies made of magnetic materials.” *See* Sur-reply 2. Although that argument is equally improper for having been presented for the first time in Patent Owner’s Sur-reply, it is also equally unpersuasive for the reasons we discuss above.

3. Independent Claim 10

In setting forth its mapping of the limitations of independent claim 10 to the combination of Liberty and Bachmann, Petitioner relies on the same analysis of Bachmann that it presented for the combination of Zhang and Bachmann in addressing each of the "generating" limitations. *See* Pet. 78–79. Because we find Petitioner's showing for each of those limitations sufficient as explained above, and because Patent Owner does not make any different arguments as directed at those limitations, we do not repeat our analysis. Rather, we limit ourselves to the preamble and remaining limitations of the claim. Petitioner also addresses these in a manner similar to how it addresses the combination of Zhang and Bachmann, but particularly accounting for differences in disclosure of translating data into a display frame of reference.

With respect to the preamble, which recites "[a] method for compensating rotations of a 3D pointing device," Petitioner identifies Liberty's pointer 400, shown in Figure 3 of Liberty, reproduced above. Petitioner explains that Liberty's pointer is a "3D pointing device" "because it can be moved in a user's hand in 3D space." *Id.* at 78. Although this explanation does not fully address all aspects of our adopted construction of "3D pointing device," it is evident from Figure 3 of Liberty, reproduced above, that Liberty's pointer is also used "to point to or control actions on a display." Furthermore, Patent Owner does not dispute that Liberty discloses a "3D pointing device."

With respect to claim 10's limitation requiring "using the orientation output and the rotation output to generate a transformed output associated with a fixed reference frame associated with a display device, wherein the

orientation output and the rotation output is generated by a nine-axis motion sensor module," Petitioner contends that Bachmann uses a nine-axis motion sensor module to generate an orientation output $\hat{q}$ and a rotation output (p, q, r). *Id.* at 79. Patent Owner disputes that the combination of Liberty and Bachmann discloses "a nine-axis motion sensor module" because of Bachmann's assertion in describing an example of a "suitable sensor device" that "[t]he individual components can be integrated using a single integrated circuit board *with the accelerometers mounted separately*." PO Resp. 40–42; Ex. 1004, 14:37–51 (emphasis added). But Patent Owner's argument parallels the argument it makes in the context of the combination of Zhang and Bachmann regarding this particular statement by Bachmann. For the reasons we discuss above, Bachmann's statement is insufficient to distinguish the set of three-axis accelerometer 31, three-axis magnetometer 32, and three-axis angular rate sensor 33 from a "nine-axis motion sensor module."

Petitioner further addresses the transformation aspect of the limitation in a manner similar to how it addresses that aspect in discussing the combination of Zhang and Bachmann. In particular, Petitioner relies on explicit disclosure in Liberty of transforming data from the frame of reference of the 3D pointing device into a frame of reference defined by a coordinate system associated with a television screen used for display. Pet. 80 (quoting Ex. 1006, 16:21–29). Supported by testimony of Dr. Sarrafzadeh, Petitioner reasons that would have been obvious to use Bachmann's orientation output $\hat{q}$ and rotation output (p, q, r) in performing the transformation described by Liberty. *Id.* According to Dr. Sarrafzadeh, this is the case for the orientation output not only because its transformation

using the available estimate of orientation is obvious, but because Liberty discloses a similar quaternion. Ex. 1002 ¶ 182; Ex. 1006, 17:36–37 ("Q is the normalized quaternion that represents the rotation from the body frame to the user frame."). And it is the case also for the rotation output, Petitioner argues, both because orientation output $\hat{q}$ is based on the rotation output, and because it would have been obvious to transform an estimate of angular velocity into display coordinates. Pet. 81. Patent Owner does not dispute the transformation aspect of Petitioner's argument, which we find sufficient for this limitation.

Finally, Petitioner addresses the remaining limitation of claim 10 ("obtaining one or more resultant deviation including a plurality of deviation angles using a plurality of measured magnetisms Mx, My, Mz and a plurality of predicted magnetism Mx′, My′ and Mz′ for the second signal set") in a manner that generally tracks its analysis of the same limitation over Zhang and Bachmann. That is, Petitioner relies on the same disclosure in Bachmann of measured and predicted magnetisms, and contends that it would have been obvious to convert Bachmann's orientation output quaternion $\hat{q}$ to Euler angles in light of Liberty's teaching that such angles are equivalent representations of orientation. *Id.* at 81–83. For the reasons we discuss above in addressing this limitation over the combination of Zhang and Bachmann, we find that Petitioner makes a sufficient showing.[22]

[22] Patent Owner's Sur-reply argument addressing this limitation also applies to the combination of Liberty and Bachmann. For the reasons explained above, that argument is both improperly raised too late and is nevertheless otherwise unpersuasive.

We conclude that Petitioner shows, by a preponderance of the evidence, that independent claim 10 is unpatentable under 35 U.S.C. § 103(a) over Liberty and Bachmann.

4. Dependent Claim 12

Petitioner addresses claim 12's recitation that "the orientation output is . . . a quaternion" by reference to its discussion of that limitation in the context of Zhang and Bachmann. Pet. 83. For the same reason expressed above, namely that Bachmann explicitly describes using quaternions, and using orientation quaternion $\hat{q}$ in particular, we find that Petitioner makes a sufficient showing. We accordingly conclude that Petitioner shows, by a preponderance of the evidence, that claim 12 is unpatentable under 35 U.S.C. § 103(a) over Liberty and Bachmann.

V. MOTION TO AMEND

Because we conclude that Petitioner shows, by a preponderance of the evidence, that both challenged claims are unpatentable, we consider Patent Owner's Motion to Amend. *See* Mot. Amend 1 (asserting that the Motion is "contingent upon a finding of invalidity of the respective challenged original claim(s)"). The Motion proposes claim 19 as a substitute for challenged claim 10, and proposes claim 20 as a substitute for challenged claim 12, with unamended claims 11 and 13–18 depending from proposed claim 20 instead of original claim 10. *See id.*, App'x. The proposed substitute claims are reproduced below, with underlining used to indicate text added to the original claims and bracketed strikethrough used to indicate text removed from the original claims.

> 19. A method for compensating rotations of a 3D pointing device, which is handheld, comprising:
>
> generating an orientation output associated with an orientation of the 3D pointing device associated with three coordinate axes of a global reference frame associated with Earth;
>
> generatin[g] a first signal set comprising axial accelerations associated with movements and rotations of the 3D pointing device in [~~the~~] a spatial reference frame;
>
> generating a second signal set associated with Earth's magnetism; generating the orientation output based on the first signal set, the second signal set and the rotation output or based on the first signal set and the second signal set;
>
> generating a rotation output associated with a rotation of the 3D pointing device associated with three coordinate axes of [~~a~~] the spatial reference frame associated with the 3D pointing device; and
>
> using the orientation output and the rotation output to generate a transformed output associated with a fixed display reference frame associated with a display device built-in to and integrated with the 3D pointing device, wherein the orientation output and the rotation output is generated by a nine-axis motion sensor module; obtaining one or more resultant deviation including a plurality of deviation angles using a plurality of measured magnetisms Mx, My, Mz and a plurality of predicted magnetism Mx′, My′, Mz′ for the second signal set.
>
> 20. The method of claim 10, wherein the 3D pointing device is a smartphone, and wherein the orientation output is a rotation matrix, a quaternion, a rotation vector, or comprises three orientation angles.

Id. Patent Owner characterizes claim 19 as "clarif[ying] that the 3D pointing device is handheld and limit[ing] the display device utilized by the method to one that is built-in to and integrated with the 3D pointing device." *Id.* at 1. Patent Owner characterizes claim 20 as "further limit[ing] the 3D pointing device to a smartphone." *Id.* In addition, Patent Owner explains

that the proposed amendments address "some limited potential issues under 35 U.S.C. § 112." *Id.*

Patent Owner contends that it has proposed a reasonable number of substitute claims, that the proposed amendments do not enlarge the scope of the claims, and that the proposed amendments are responsive to at least one ground of unpatentability involved in the trial. *Id.* at 3–5. We agree with these contentions, which are not disputed by Petitioner. We address other aspects of the proposed amendments as follows.

A. New Matter and Effective Filing Date

A motion to amend may not present substitute claims that introduce new subject matter. 35 U.S.C. § 316(d)(3); 37 C.F.R. § 42.121(a)(2)(ii). New matter is any addition to the claims that lacks sufficient support in the subject patent's original disclosure. *See TurboCare Div. of Demag Delaval Turbomach. v. Gen. Elec. Co.*, 264 F.3d 1111, 1118 (Fed. Cir. 2001) ("When [an] applicant adds a claim . . . , the new claim[] must find support in the original specification."). The Board requires that a motion to amend set forth written-description support in the originally filed disclosure of the subject patent for each proposed substitute claim, and also set forth support in an earlier-filed disclosure for each claim for which benefit of the filing date of the earlier-filed disclosure is sought. *See* 37 C.F.R. §§ 42.121(b)(1), 42.121(b)(2).

The '978 patent is a continuation-in-part of U.S. Application No. 13/072,794, filed March 28, 2011 (issued as U.S. Patent No. 9,760,186 B2, "the '794 application"). Ex. 1001, 1:8–10. The '794 application is a continuation-in-part of U.S. Application No. 12/943,934, filed November

11, 2010 (issued as the ’438 patent, “the ’934 application”). *Id.* at 1:10–13. The ’438 patent claims the benefit of U.S. Provisional Patent Application No. 61/292,558, filed January 6, 2010 (“the ’558 provisional application”). *Id.* at 1:13–15. Patent Owner contends that each of the proposed substitute claims “is supported by the original disclosure of the ‘978 Patent and/or the related ‘558 Provisional, thereby reasonably conveying to one of ordinary skill in the art that the inventor was in possession of the claimed subject matter as of the filing dates of the ‘978 Patent and/or the ‘558 Provisional.” Mot. Amend 5.

Petitioner disputes this contention, arguing that “[a]t a minimum, the patent owner’s initial burden of production under § 119(e)/120 requires the patent owner to identify support in each application—including *each intermediate application* in the chain—stretching back to the first application whose priority is sought.” Opp. Amend 1; *see Encyclopaedia Britannica, Inc. v. Alpine Elecs. of Am., Inc.*, 609 F.3d 1345, 1350–52 (Fed. Cir. 2010) (interpreting “similarly entitled,” as recited in 35 U.S.C. § 120, as requiring each intermediate application independently to satisfy all § 120 requirements). As Petitioner asserts, neither the ’794 application nor the ’934 application, which are intermediate applications in the chain from the ’978 patent to the ’558 provisional application, has been entered into evidence in this proceeding. Opp. Amend 2. Furthermore, Patent Owner has not proffered any showing that those intermediate applications provide written-description support for the limitations it proposes to add with its substitute claims. For this reason, we agree with Petitioner that Patent Owner’s showing for any effective filing date earlier than the July 6, 2011, filing date of the ’978 patent is facially defective. Nevertheless, because we

also find that the ’558 provisional application provides inadequate written-description support for the proposed substitute claims, we address the issue below in the interest of a complete record.

1. “a fixed display reference frame associated with a display device built-in to and integrated with the 3D pointing device”

Proposed substitute claim 19 recites “a fixed display reference frame associated with a display device built-in to and integrated with the 3D pointing device.” Mot. Amend, App’x. In addressing written-description support for this limitation in the ’558 provisional application, Patent Owner observes that the ’558 provisional application “discloses that the 3D pointing device may be ‘a cellular phone,’” and provides testimonial by Dr. LaViola that a person of ordinary skill in the art “would know that a cellular phone . . . has a built-in display device that is integrated therein.” *Id.* at 7 (citing Ex. 2012 at 12, ¶ 23 (provisional application for ’978 patent); Ex. 2011 ¶ 18). But even crediting Dr. LaViola’s testimony does not support Patent Owner’s conclusion. That is, the mere fact that a cellular phone may have a built-in display that is integrated therein does not sufficiently address the limitations full requirement of “a fixed display reference frame associated with” such a display. The disclosure of the ’558 provisional application identified by Patent Owner does not reasonably convey the required association. For example, as Petitioner observes, Figure 1 of the ’558 provisional application shows a screen that is *separate from* the 3D pointing device and on which a cursor or game is displayed. Opp. Amend 5; Ex. 2012, 20 (Fig. 1). As the ’558 provisional application explains, “the remote controller 10 [i.e., the cellular phone] may be used *to point a cursor or*

control a game displayed on a screen 12." Ex. 2012 at 12, ¶ 24 (emphasis added).

This is in contrast to the disclosure of the '978 patent, which we do find provides sufficient written-description support for the limitation. In particular, Patent Owner observes that the originally filed specification of the '978 patent discloses that the 3D pointing device "may further comprise[] a built-in display" that may be "integrated on the housing." Mot. Amend 7 (citing Ex. 1009 at 129, ¶ 48; 186, Fig. 6). Notably, the portion of the disclosure cited by Patent Owner teaches that "the abovementioned display reference frame associated with a display may need not to be external to the spatial reference frame in terms of the hardware configuration." Ex. 1009 at 129, ¶ 48.

2. "handheld"

Proposed substitute claim 19 also requires that the 3D pointing device be "handheld." Because the claim is not entitled to the filing date of the '558 provisional application, we address only whether the "handheld" requirement finds sufficient written-description support in the disclosure of the '978 patent. Patent Owner directs our attention to disclosure in the originally filed specification of "a portable 3D pointing device," as well as several specific embodiments in which the 3D pointing device is a "computer mouse" or "smartphone, tablet PC or navigation equipment." Mot. Amend 6 (quoting Ex. 1009 at 104, ¶ 2; 129, ¶ 48). In addition, Patent Owner provides testimony by Dr. LaViola that a person having ordinary skill in the art "would understand that a 'portable' device is typically one that is 'handheld.'" Ex. 2011 ¶ 16. We agree that these identifications are

sufficient to conclude that no new matter is added by the requirement that the 3D pointing device be "handheld," and Petitioner does not contend otherwise.

3. "smartphone"

Proposed substitute claim 20 requires that the 3D pointing device be "a smartphone." Mot. Amend, App'x. Because the claim depends from proposed substitute claim 19, it is also not entitled to the filing date of the '558 provisional application. In addressing the limitation, Patent Owner cites several instances in the original specification of the '978 patent that it characterizes as "repeatedly disclos[ing] that the 3D pointing device may be a portable electronic device 'such as a smartphone,'" an example of which is depicted in Figure 6. *Id.* at 7–8 (citing Ex. 1009 at 119, ¶ 27; 129, ¶ 48; 131, ¶ 50; 138, ¶ 58; 148, ¶ 71; 149, ¶ 72, 150, ¶ 74; 156, ¶ 81; 175, ¶ 113; 186,[23] Fig. 6). We agree with these identifications, which are not disputed by Petitioner, and therefore conclude that no new matter is added by the proposed amendment.

4. Summary

To summarize, we find that no new matter is added to proposed substitute claims 19 and 20. But because the limitation of proposed substitute claim 19 requires "a fixed display reference frame associated with a display device built-in to and integrated with the 3D pointing device," which lacks sufficient support in the '558 provisional application, the

[23] Patent Owner's citation to page 196 for Figure 6 appears to be a typographical error.

effective filing date of the proposed substitute claims is the July 6, 2011, filing date of the ’978 patent.

B. Antedating

In replying to Petitioner’s argument that the proposed substitute claims are not patentable over the prior art, Patent Owner asserts that “the claims and proposed amended cla[i]ms of the ‘978 Patent are entitled to an even earlier priority date of at least May 22, 2009, based on the conception and diligent reduction to practice of the claimed invention.” Reply Amend 1.

The one asserting a prior date of invention bears the burden of establishing facts necessary to prove earlier conception or an earlier reduction to practice. *See* 37 C.F.R. § 1.131(b); *In re Facius*, 408 F.2d 1396, 1404 (CCPA 1969). Proof of conception requires objective evidence of the inventor’s subjective beliefs. *Invitrogen Corp. v. Clontech Labs., Inc.*, 429 F.3d 1052, 1064 (Fed. Cir. 2005). Such proofs must address all limitations of the claimed invention. *Burroughs Wellcome Co. v. Barr Labs., Inc.*, 40 F.3d 1223, 1228 (Fed. Cir. 1994) (“Conception is complete only when the idea is so clearly defined in the inventor’s mind that only ordinary skill would be necessary to reduce the invention to practice, without extensive research or experimentation.”). “Because it is a mental act, courts require corroborating evidence of a contemporaneous disclosure that would enable one skilled in the art to make the invention.” *Id.* (citing *Coleman v. Dines*, 754 F.2d 353, 359 (Fed. Cir. 1985)).

Relying on a Declaration by Shun-Nan Liou, one of the inventors of the ’978 patent, Patent Owner contends that “the named inventors conceived

of the invention claimed by the . . . '978 Patent[] by at least May 22, 2009." *Id.* at 2 (citing Ex. 2020[24] ¶ 15; Ex. 2022, 4 (revision history of hardware specification of "JIL Game System")). According to Patent Owner, "[a] working prototype of a smartphone—the JIL Phone— . . . was finalized and *actually* reduced to practice by at least June 29, 2009," and "updates to the JIL Phone software *actually* reduced all elements of the challenged claims of the '978 Patent to practice by September 25, 2009." *Id.* (citing Ex. 2020 ¶¶ 15, 23; Ex. 2025 (CyWee Phone API Reference), 2; Exs. 2028–2029 (email correspondence and attachment); Ex. 2032, Section III). In addition, Patent Owner contends that "Dr. Liou and the other inventors worked with reasonably continuous diligence between those critical dates of conception and reduction to practice." *Id.* at 2–3 (citing Ex. 2020 ¶ 15). Accordingly, Patent Owner contends that, "[b]ecause of this diligence, the . . . '978 Patent[] [is] entitled to a priority date reaching back to the May 22, 2009 date of conception. *Id.* at 3.

We have considered Patent Owner's evidence, which includes, in addition to Dr. Liou's Declaration: (1) an internal CyWee presentation, titled "CyWee, Where Technology Entertains 2009.09," Ex. 2021; (2) a hardware specification of the "JIL Game System," Ex. 2022; (3) a "Bill of Material for B-01-C01 (Invensense gyro) 20100518.PCB, Ex. 2023; (4)

---

[24] Dr. Liou's original Declaration, filed on July 31, 2019, is unsworn. In response to a request by Patent Owner, we authorized Patent Owner to file a corrected version of the Declaration with statements that the Declaration is sworn under penalty of perjury, and that Dr. Liou has been warned of the consequences of false statements. Paper 69. A version of the Declaration corrected in accordance with that authorization was filed on September 6, 2019. No cross-examination testimony of Dr. Liou was entered into the record.

photographs of a JIL Phone prototype and the printed circuit board in that device, Ex. 2024; (5) a document titled "CyWee Phone API Reference," Ex. 2025; (6) a document titled "CyWee Motion Fusion Solution," Ex. 2026; (7) a presentation titled "CyWee: Where technology entertains," and subtitled "Technical Presentation: Motion Technology and Gaming Applications," Ex. 2027; (8) email correspondence from "Joe Ye" at CyWee to "James Shen" at Qualcomm, Ex. 2028; (9) an attachment to the email correspondence of Exhibit 2028, Ex. 2029; and (10) a Mutual Non-Disclosure Agreement between CyWee and Qualcomm, Ex. 2030. After considering such evidence, we find that Patent Owner has not carried its burden of providing sufficient corroborating evidence of at least conception and diligence.[25]

First, Dr. Liou testifies that "[c]laims 10 and 12 of the '978 patent were conceived of by the end of May 2009." Ex. 2020 ¶ 15. To support this date, Dr. Liou cites page 4 of Exhibit 2022, which provides the following revision history of the JIL Game System hardware specification:

[25] We note our agreement with Petitioner that Dr. Liou's testimony "is only directed to the *original* claims 10 and 12—not new claims 19 and 20." Sur-reply Amend 1 (citing Ex. 2020 ¶ 15). Nevertheless, because we can reasonably understand Dr. Liou's testimony as applied to the proposed substitute claims, we address the sufficiency of that evidence in the context of Patent Owner's Motion to Amend.

Revision History

Date of Change	Doc Version	Sections Changed	Description	Change made by
22 May 2009	0.9	All	Basic device selection.	Shigenori Imanaka
22 Jun 2009	1.12	All	All device	Shigenori Imanaka
7 Nov 2009	1.5	All	Description and Explanation	Shigenori Imanaka

The revision history, reproduced from Exhibit 2022 above, indicates that on May 22, 2009, i.e., the date Patent Owner asserts as the effective filing date for the proposed substitute claims, "[a]ll" sections of the document were changed, with a description of "Basic device selection." Additional changes were made to "[a]ll" sections of the document on later dates, with a date of November 7, 2009, assigned for the version of the document submitted into evidence in this proceeding.

To accord a conception date of May 22, 2009, would require that we speculate what was included in the earlier version of the hardware specification. Doing so is problematic in multiple respects because, as Petitioner encapsulated during the oral hearing, "[w]e don't know what the manual looked like on that day." Tr. 42:24–43:1. In particular, we agree with Petitioner that reliance on Exhibit 2022 must tie specific disclosures with the May 22, 2009, revision date. *See id.* at 42:20–23. We also agree with Petitioner that the revision history is ambiguous because there is no evidence "that 'Basic device selection' was complete (rather than begun) as of May 22, 2009." Sur-reply Amend 2.

One particular point of concern is whether the JIL phone included a nine-axis output, as required by proposed substitute claim 19. Petitioner directs our attention to page 6 of Exhibit 2022, which includes a diagram

and a hardware list that do not include orientation sensors. *Id.* Dr. Liou also addresses this point directly by testifying that "[t]he hardware selected before May 22, 2009 show that the JIL phone was a smartphone that included a 9-axis output" by including a three-axis accelerometer, a three-axis rotation output, and a three-axis magnetometer. Ex. 2020 ¶ 14 (citing Ex. 2021, 9). Although we agree that the additional document cited by Dr. Liou, i.e., Exhibit 2021, is consistent with his testimony, that document suffers from similar questions regarding its date as does Exhibit 2022.

On its face, the notation "2009.09" on the first page of Exhibit 2021 appears to refer to a date, i.e., September, 2009. Ex. 2021, 1. Such an understanding is consistent with Dr. Liou's testimony that the document was "last modified September 11, 2009," which is later than the May 22, 2009, date Patent Owner relies on. *See* Ex. 2020 ¶ 2. Dr. Liou also testifies that "[t]he document's properties show that it was created December 18, 2008," but even crediting such a creation date would require speculation as to what the document contained on that creation date or at some intermediate

revision date.[26] *See id.* We thus conclude that Patent Owner provides insufficient corroborating evidence of a conception date of May 22, 2009.

Second, Dr. Liou testifies that "[c]laims 10 and 12 of the '978 patent were conceived of by the end of May 2009 and diligently reduced to practice by at least as early as September 25, 2009." Ex. 2020 ¶ 15. But the only evidence to support this assertion of diligent reduction to practice is Dr. Liou's testimony that "[b]etween the date of conception and the actual reduction to practice of each patent, CyWee held weekly research and development meetings for each of the on-going projects, which were attended by a team consisting of the co-inventors of the . . . '978 Patent[] and others working at our direction." *Id.*

"Reasonable diligence must be shown throughout the entire critical period, which begins just prior to the competing reference's effective date and ends on the date of the invention's reduction to practice." *Perfect*

---

[26] Petitioner raises further questions about the date properly to be ascribed to Exhibit 2021. As Petitioner asserts, the .pdf version of the document entered into evidence has a creation date of 2016, not 2008. Sur-reply Amend 2 (citing Ex. 1039 (metadata of Exhibit 2021)). Patent Owner explains that "[t]he underlying PowerPoint file was actually created in 2008 and modified in 2009," as Dr. Liou testifies, but that the "2016 date is the date when the PowerPoint file was converted to a pdf file in order to produce it in the underlying CyWee versus Apple lawsuit." Tr. 85:7–19. Although this explanation is reasonable, Petitioner raises additional questions that suggest a later date of creation because the number of patents filed by CyWee summarized on page 2 of the documents seems inconsistent with the number of patent applications CyWee had actually filed in 2008. *See* Sur-reply Amend 2–3. Ultimately, we need not resolve this dispute because even fully crediting Dr. Liou's testimony by ascribing a creation date of December 18, 2008, leaves open the central question of what the document contained at that creation date, or at some intermediate revision date.

Surgical Techniques, Inc. v. Olympus Am., Inc., 841 F.3d 1004, 1007 (Fed. Cir. 2016). And "[a]n inventor's testimony regarding his reasonable diligence must be corroborated by evidence." *Id.* Dr. Liou's testimony of a pattern of weekly research meetings is insufficient to satisfy these standards. Not only does Dr. Liou "fail[] to allege that the inventors actually worked on the inventions of the *proposed amended claims*—as opposed to CyWee's numerous other projects—during these meetings," as Petitioner asserts, but Patent Owner offers no corroboration for Dr. Liou's testimony regarding such meetings. We accordingly conclude that Patent Owner provides insufficient corroborating evidence of diligent reduction to practice.

Because we find that Patent Owner provides insufficient evidence of corroboration of at least conception and diligence, we conclude that Patent Owner provides insufficient evidence to support its claim to an effective filing date for the proposed substitute claims of May 22, 2009. Accordingly, we treat the proposed substitute claims as having an effective filing date that corresponds to the July 6, 2011, filing date of the '978 patent.

C. Obviousness

Petitioner contends that the proposed amended claims are unpatentable under 35 U.S.C. § 103(a) for obviousness over the combination of U.S. Patent Publ. No. US 2010/0312468 A1 (Ex. 1017, "Withanawasam") and Bachmann.

1. Overview of Withanawasam

Withanawasam was filed on June 3, 2009. Ex. 1017, code (22). Because we accord the proposed substitute claims an effective filing date of

July 6, 2011, Withanawasam is prior art to those claims under 35 U.S.C. § 102(e).

Withanawasam describes "an integrated sensor device," an example of which is a personal navigation device like that shown in Figure 1 of Withanawasam, reproduced below. Ex. 1017 ¶¶ 2, 11.

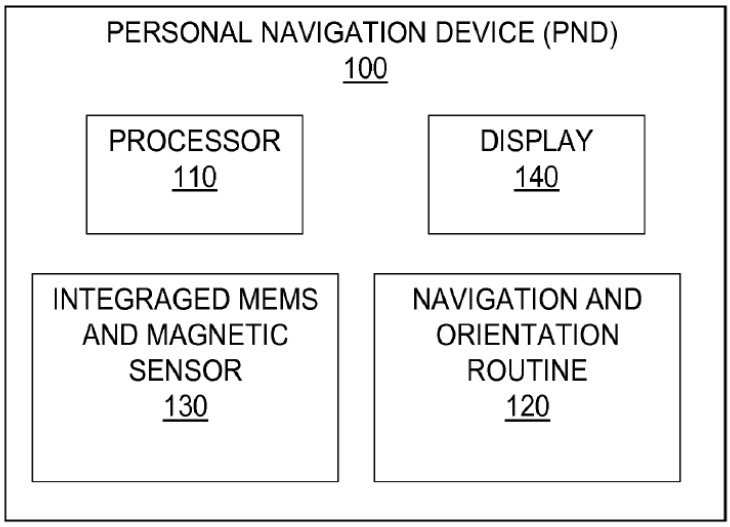

FIG. 1

The personal navigation device, reproduced above, "can be a mobile (hand-held navigation device, a smart phone, or any similar mobile device configured to aid a user in navigation and applications requiring orientation information." *Id.* ¶ 11. The device includes processor 100, which is configured to run navigation and orientation routine module 120. *Id.* Display 140 "can comprise a liquid crystal display (LCD), a digital display, or the like," and presents navigation information that "includes positional information, orientation information, maps, compass directions, a predetermined path, or any other information useful in navigation." *Id.*

Withanawasam describes "orientation information" as "information relating to the present orientation of the [personal navigation device], and can be determined using the integrated MEMS [i.e., microelectromechanical systems] and magnetic sensor 130." *Id.* ¶ 12. Sensor 130 provides information "relating to acceleration, roll and directional data (that is, relating to a compass direction)," and "can use three axes of sensing for acceleration and gyroscope data in one single integrated MEMS sensor." *Id.*

2. Rationale for Combining Teachings of Withanawasam and Bachmann

Petitioner's proposed combination of Withanawasam and Bachmann is structurally similar to its proposed combinations of Zhang or Liberty with Bachmann, discussed above: "It would have been obvious to use Bachmann's choice of sensors and Bachmann's method of calculating orientation by fusing magnetic, gyroscopic and acceleration sensor outputs to implement Withanawasam's device." Opp. Amend 7. In making this argument, Petitioner provides testimony by Dr. Sarrafzadeh that "a person of ordinary skill in the relevant timeframe would have understood from Withanawasam that smartphones with multiple sensors (including magnetic, gyroscopic and acceleration sensors) existed," but that Withanawasam "leaves open the exact configuration of sensors." Ex. 1018 ¶ 56. In addition, Petitioner provides further testimony by Dr. Sarrafzadeh that, while "the sensors themselves do not produce an orientation value as an output," Withanawasam recognizes that "the sensors' output data must be processed further" by processor 110, without "expressly teach[ing] a method for mathematically fusing sensor data." *Id.*

Petitioner identifies specific advantages that it contends, with testimonial support by Dr. Sarrafzadeh, would have been understood by a person of skill in the art as a consequence of using Bachmann's nine-axis sensor in Withanawasam's smartphone. *See* Opp. Amend 8 (citing Ex. 1018 ¶ 61). These identified advantages include allowing a person of skill in the art "to choose sensors and fuse the sensor data accurately," allowing Withanawasam's smartphone to obtain the orientation of the device in all rotational degrees of freedom, and allowing greater precision through overdetermination. *Id.* (citing Ex. 1018 ¶ 61).

Patent Owner disputes the sufficiency of Petitioner's showing, including on some bases that parallel those discussed above for the combination of Zhang or Liberty with Bachmann. Specifically, Patent Owner contends that Bachmann "expressly teaches away from using its sensor system and fusion method on any rigid bodies made of magnetic materials," a contention that we find unpersuasive for the reasons discussed above. Reply Amend 6. That is, Petitioner provides testimony by Dr. Sarrafzadeh that reconciles what might otherwise be an ambiguity in Bachmann's disclosure, which specifically identifies devices that generally have steel, such as "non-magnetic prosthetic devices, robot arms, or other machinery" and "hand-held devices, swords, pistols, or simulated weapons." Ex. 1044 ¶¶ 5–12; Ex. 1004, 13:47–48, 13:59–62. Dr. Sarrafzadeh explains that "Bachmann's reference to [a] device 'made of non-magnetic materials' means that . . . the device should not be 'made of' materials that produce a significant magnetic field, relative to the Earth's magnetic field." Ex. 1044 ¶ 6.

In the specific context of combining Bachmann with Withanawasam, both experts agree that smartphones have speakers and that audio speakers are constructed using small permanent magnets. Ex. 1044 ¶ 9; Ex. 2032 ¶ 28. Dr. Sarrafzadeh testifies, notwithstanding such components, "[a] person of ordinary skill would not have been dissuaded from using a method like Bachmann's for sensor fusion in a smartphone" because "[t]he problem of magnetic interference based on magnetic components of a smartphone was simply not significant." Ex. 1044 ¶ 11. And Dr. Sarrafzadeh strengthens the basis for this opinion by observing that Withanawasam itself teaches the use of magnetic sensors in smartphones: "These mobile devices often utilize a magnetic compass that ha[s] to work even when the device is not held level, which requires a micro-electro-mechanical systems (MEMS) accelerometer or a gyroscope to be *integrated with the magnetic sensors*." *Id.*; Ex. 1017 ¶ 1 (emphasis added).

Patent Owner also suggests that the combination of Withanawasam and Bachmann is effected by Petitioner only through the use of hindsight reconstruction, noting that "it was Petitioner's counsel, and not its expert, that decided that the references should be combined." Reply Amend 6–7. But we see nothing unusual or improper in Petitioner's counsel identifying references and soliciting the opinion of an expert regarding what a person of skill in the art would have done with the teaching of such references. *See* Sur-reply Amend 7–8 (citing *Amazon.com, Inc. v. Barnesandnoble.com, Inc.*, 239 F.3d 1343, 1364 (Fed. Cir. 2001)) ("The proper test is whether a *hypothetical* [person having ordinary skill in the art] would consider the claims obvious—not what any single individual actually did.").

We are also not persuaded by Patent Owner's argument that Petitioner's rationale for combining the teachings of Withanawasam and Bachmann is "illogical." *See* Reply Amend 7–8. Patent Owner grounds this argument in its characterization of Withanawasam as "contain[ing] no indication that a sensor fusion method would be necessary or useful." *Id.* at 7. Although Dr. LaViola makes the same statement, Ex. 2032 ¶ 29, Petitioner tested the statement on cross-examination, and we agree that that cross-examination testimony supports Petitioner's characterization that Dr. LaViola "testified that Withanawasam teaches using a variety of sensor types to improve accuracy of the orientation calculation." Sur-reply Amend 8 (citing Ex. 1043, 62:10–64:23[27]). For example, Withanawasam teaches "[i]ntegrating an accelerometer . . . or a gyroscope and magnetic sensors into a common semiconductor device." Ex. 1017 ¶ 10. Petitioner concedes that "the sensors do not output orientation," which "must be calculated from sensor output" in reasoning that a person of skill in the art "would have recognized the advantages of sensor fusion and sought an available method, like Bachmann's." Sur-reply Amend 8 (citing Ex. 1018 ¶¶ 56–57). In light of Dr. LaViola's additional cross-examination testimony that the purpose of sensor fusion is "to take those different sensors or the information of those sensors and combine them together so that you can get a more accurate result than if you were to try to use any of them individually," we find that Petitioner makes a sufficient showing. Ex. 1019, 23:15–18.

[27] This citation does not appear to be correct. But Petitioner's characterization is consistent with Dr. LaViola's testimony at 66:10–75:23.

In light of these considerations, we conclude that Petitioner articulates sufficient reasoning, with rational underpinning, to effect the combination of teachings from Withanawasam and Bachmann that it proposes.

3. Proposed Substitute Claim 19

In setting forth its mapping of the limitations of proposed substitute claim 19 to the combination of Withanawasam and Bachmann, Petitioner presents an analysis for each of the "generating" limitations that generally corresponds to the analysis provided by Petitioner for those same limitations in the context of asserting unpatentability of independent claim 10 over Zhang and Bachmann. *Compare* Opp. Amend 14–17, *with* Pet. 41–54. That is, except for minor amendments to address "some limited potential issues under 35 U.S.C. § 112" that do not meaningfully impact Petitioner's earlier analysis, those limitations are identical in original claim 10 and proposed substitute claim 19. *See* Mot. Amend 1. Moreover, Petitioner's analysis relies on Bachmann, rather than Zhang or Withanawasam, for specific details of the "generating" limitations, and Patent Owner makes no distinct arguments directed at those limitations in addressing Petitioner's analysis of the Withanawasam-Bachmann combination. *See generally* Reply Amend 8–12. Because we find Petitioner's showing sufficient that each of those limitations is disclosed by Bachmann, as explained in detail above in the context of the Zhang-Bachmann combination, we do not repeat that analysis here for the Withanawasam-Bachmann combination. Rather, we limit ourselves to the preamble and remaining limitations of the proposed substitute claim.

With respect to the preamble, which recites "[a] method for compensating rotations of a 3D pointing device, which is handheld," Petitioner identifies Withanawasam's smartphone, acting as a personal navigation device. Opp. Amend 11–12. Petitioner contends, and we agree, that Withanawasam's device is both disclosed as handheld and otherwise meets all aspects of our adopted construction of "3D pointing device." *Id.* at 11–14; *see* Ex. 1017 ¶ 11 ("The PND 100 can be a mobile (hand-held) navigation device, a smart phone, or any similar mobile device configured to aid a user in navigation and applications requiring orientation information."). As Petitioner asserts, Withanawasam describes detecting the motion of its device in three dimensions, and is capable of translating the detected motions to control an output on a display. Opp. Amend 12–13 (citing Ex. 1017 ¶¶ 11, 12, claim 15; Ex. 1018 ¶¶ 73, 74). Specifically, because Withanawasam describes a display as presenting navigation information to a user, Petitioner reasons that "[t]his indicates that Withanawasam's device is capable of translating the detected motions to control an output on a display, because the motions that are detected by a sensor are translated to a device orientation, which is used to control output on a display (by display[ing] the orientation, a compass direction, or a path." *Id.* at 13 (citing Ex. 1018 ¶ 74).

Patent Owner disputes that Withanawasam discloses a "3D pointing device" because, it contends, "*Withanawasam*, as disclosed, is not capable of detecting orientation in three-dimensions." Reply Amend 8. In doing so, Patent Owner notes that Withanawasam discloses that its MEMS sensor uses "three axes of sensing for acceleration," which, Patent Owner contends, "would allow for sensing movement in three dimensions, but would not orientation." *Id.* at 9. For orientation, Patent Owner further contends that

Withanawasam's gyroscope can detect roll, "but the disclosure makes no mention of detecting orientation relating to pitch and/or yaw." *Id.*

We agree with Petitioner that "[a] person of ordinary skill would not have read Withanawasam's disclosure of flexible sensor arrangements as limited to two axes of orientation," and further note that any deficiency of Withanawasam in this respect is corrected through the combination with Bachmann. Sur-reply Amend 9. We addressed a similar point above in discussing the combination of Zhang and Bachmann in the context of original claim 10. That is, Bachmann discloses detecting motion in three dimensions such that using Bachmann's choice of sensors, as contemplated by Petitioner's proposed combination, would render the smart phone in the combination a "3D pointing device." *See id.* We therefore find that Petitioner makes a sufficient showing with respect to the preamble.

For proposed substitute claim 19's limitation requiring "using the orientation output and the rotation output to generate a transformed output associated with a fixed <u>display</u> reference frame associated with a display device <u>built-in to and integrated with the 3D pointing device</u>, wherein the orientation output and the rotation output is generated by a nine-axis motion sensor module," Petitioner contends that Bachmann uses a nine-axis motion sensor module to generate an orientation output $\hat{q}$ and a rotation output (p, q, r). Opp. Amend 17. This parallels Petitioner's argument with respect to original claim 10 under the combination of Zhang and Bachmann, and with which we agree.

Petitioner adds to its argument specifically to address the amendment that requires the display device be "built-in to and integrated with the 3D pointing device," a feature that Petitioner contends "would have been well-

understood and obvious in the relevant timeframe" in Withanawasam's smartphone embodiment. *Id.* at 18 (citing Ex. 1018 ¶ 158). Relying on testimony by Dr. Sarrafzadeh, Petitioner contends that such display devices were "typical" for smartphones in the relevant timeframe, and thereby reasons that including such a display device in the combination of Withanawasam and Bachmann would have been obvious "to protect the electrical circuits of the display and avoid forcing the user to carry the display as a separate element." *Id.* (citing Ex. 1018 ¶ 158). As Petitioner and Dr. Sarrafzadeh assert, "[a] display built in to and integrated with the device would have inherently and obviously been **'associated with' a display reference frame**, which is simply a coordinate system that moves with the display." *Id.*; Ex. 1018 ¶ 158.

Patent Owner disputes that the limitation is rendered obvious by the combination, asserting that neither reference enables a person of skill in the art to perform a transformation that maps "orientation and rotation outputs based on the three-dimensional orientation of the device . . . as a two-dimensional . . . movement pattern in the display plane." Reply Amend 10. This argument is not entirely clear, but we agree with Petitioner that Patent Owner "seems to be arguing that the claim should be limited to a specific type of transformation (*i.e.* from 3-D to 2-D coordinates)." Sur-reply Amend 10. We also agree with Petitioner that such an argument would impose a limitation not recited in the claim because the proposed substitute claim "only requires a 'transformed output' (without specifying the type) that is '<u>associated with</u>' a reference frame that is '<u>associated with</u>' a screen." *Id.* And in the combination of Withanawasam and Bachmann, "Bachmann's quaternion orientation would be transformed into Withanawasam's

orientation information on a display, which could be orientation, directions, or a path on a map." *Id.* We accordingly find that Petitioner makes a sufficient showing with respect to this limitation.

Finally, Petitioner addresses the remaining limitation of proposed substitute claim 19, which is identical to the corresponding limitation of original claim 10 ("obtaining one or more resultant deviation including a plurality of deviation angles using a plurality of measured magnetisms Mx, My, Mz and a plurality of predicted magnetism Mx′, My′, Mz′ for the second signal set") in a manner that generally tracks its analysis of the same limitation over Zhang and Bachmann. That is, Petitioner relies on the same disclosure in Bachmann of measured and predicted magnetisms, and contends that it would have been obvious to convert Bachmann's orientation output quaternion $\hat{q}$ to Euler angles as "well within the level of ordinary skill in the art" and capable of being "carried out using published techniques." Opp. Amend 20 (citing Ex. 1018 ¶ 106).

Although Patent Owner disputes Petitioner's showing because Bachmann "does not teach calculating the predicted magnetisms using information from the current state at time T," we find that argument unpersuasive because it improperly reads in a further limitation into recited in the claim. In particular, we agree with Petitioner that "[t]he claim has no limitation that would prevent calculating predicted magnetism using information from earlier times." Sur-reply Amend 11. As we note above, in making its argument, Patent Owner cites the paragraph at column 23, lines 9–34 of the '978 patent, which describes an embodiment in which the prediction is made for time T. But we agree with Petitioner that "[t]he cited passage does not reflect [Patent Owner's] more limiting argument, namely

that the prediction *is calculated* using only information collected at time T." *Id.* (footnote omitted).

In light of these considerations, we conclude that Petitioner shows, by a preponderance of the evidence, that proposed substitute claim 19 is unpatentable under 35 U.S.C. § 103(a) over Withanawasam and Bachmann.

4. Proposed Substitute Claim 20

For proposed substitute claim 20, which additionally recites that "the 3D pointing device is a smartphone" and that "the output orientation output is . . . a quaternion," among other disjunctively recited possibilities, Petitioner relies on two straightforward disclosures.[28] First, Petitioner observes that "Withanawasam teaches that its device can be a smartphone." Opp. Amend 23 (citing Ex. 1017 ¶¶ 1, 11, claim 17; Ex. 1018 ¶ 111). Second, Petitioner observes that "Bachmann discloses that the orientation output is a **quaternion** $\hat{q}$." *Id.* at 23–24 (citing Ex. 1004, 10:12–14; Ex. 1018 ¶ 112). We agree with these identifications, which are not disputed by Patent Owner. We therefore conclude that Petitioner shows, by a preponderance of the evidence, that proposed substitute claim 20 is unpatentable under 35 U.S.C. § 103(a) over Withanawasam and Bachmann.

[28] Although proposed substitute claim 20 depends from original claim 10, we understand that Patent Owner likely intended it to depend from proposed substitute claim 19. Because proposed substitute claim 19 is narrower than original claim 10, and includes all limitations of original claim 10, our analysis is the same under either dependency.

5. Summary

Because Petitioner sufficiently shows that all proposed substitute claims are unpatentable for obviousness over the combination of Withanawasam and Bachmann, we deny Patent Owner's Motion to Amend the claims.

VI. CONCLUSION

The table below summarizes our conclusions as to the challenged claims.

Claims	35 U.S.C. §	References	Claims Shown Unpatentable	Claims Not Shown Unpatentable
10, 12	103(a)	Zhang, Bachmann	10, 12	
10, 12	103(a)	Liberty, Bachmann	10, 12	
Overall Outcome			10, 12	

The table below summarizes our conclusions as to Petitioner's Motion to Amend the claims.[29]

Motion to Amend Outcome	Claims
Original Claims Canceled by Amendment	
Substitute Claims Proposed in the Amendment	19, 20
Substitute Claims: Motion to Amend Granted	
Substitute Claims: Motion to Amend Denied	19, 20
Substitute Claims: Not Reached	

[29] Should Patent Owner wish to pursue amendment of the challenged claims in a reissue or reexamination proceeding subsequent to the issuance of this decision, we draw Patent Owner's attention to the April 2019 *Notice Regarding Options for Amendments by Patent Owner Through Reissue or Reexamination During a Pending AIA Trial Proceeding*. *See* 84 Fed. Reg. 16,654 (Apr. 22, 2019). If Patent Owner chooses to file a reissue application or a request for reexamination of the challenged patent, we remind Patent Owner of its continuing obligation to notify the Board of any such related matters in updated mandatory notices. *See* 37 C.F.R. § 42.8(a)(3), (b)(2).

VI. ORDER

It is

ORDERED that Patent Owner's first and second Motions to Terminate are *denied*;

FURTHER ORDERED that, based on a preponderance of the evidence, claims 10 and 12 of U.S. Patent No. 8,552,978 B2 have been shown to be unpatentable;

FURTHER ORDERED that Patent Owner's Motion to Amend the claims is *denied*; and

FURTHER ORDERED that, because this is a final written decision, parties to this proceeding seeking judicial review of our decision must comply with the notice and service requirements of 37 C.F.R. § 90.2.

For Petitioner:

Matthew A. Smith
Andrew S. Baluch
SMITH BALUCH LLP
smith@smithbaluch.com
baluch@smithbaluch.com

James Sobieraj
Jon Beaupre
Yeuzhong Feng
Andres Shoffstall
BRINKS GILSON & LIONE
jsobieraj@brinksgilson.com
jbeaupre@brinksgilson.com
yfen@brinksgilson.com
ashoffstall@brinksgilson.com

Naveen Modi
Chetan Bansal
PAUL HASTINGS LLP
naveenmodi@paulhastings.com
chetanbansal@paulhastings.com

Collin Park
Andrew Devkar
Jeremy Peterson
Adam Brooke
MORGAN LEWIS & BOCKIUS LLP
Collin.park@morganlewis.com
Andrew.devkar@morganlewis.com
jpeterson@morganlewis.com
adam.brooke@morganlewis.com

Kristopher Reed
Benjamin Klein
Norris Booth
KILPATRICK TOWNSEND
kreed@kilpatricktownsend.com
bkleinman@kilpatricktownsend.com
nboothe@kilpatricktownsend.com

For Patent Owner:

Jay P. Kesan
DIMURO GINSBERG PC-DGKEYIP GROUP
jkesan@dimuro.com

Ari Rafilson
SHORE CHAN DEPUMPO LLP
arafilson@shorechan.com