US007892083B2

(12) **United States Patent**
Okada

(10) **Patent No.: US 7,892,083 B2**
(45) **Date of Patent: Feb. 22, 2011**

(54) **GAMING APPARATUS AND PLAYING METHOD THEREOF**

(75) Inventor: **Kazuo Okada**, Tokyo (JP)

(73) Assignee: **Aruze Gaming America, Inc.**, Las Vegas, NV (US)

(*) Notice: Subject to any disclaimer, the term of this patent is extended or adjusted under 35 U.S.C. 154(b) by 934 days.

(21) Appl. No.: **11/806,332**

(22) Filed: **May 31, 2007**

(65) **Prior Publication Data**

US 2008/0113721 A1 May 15, 2008

Related U.S. Application Data

(60) Provisional application No. 60/858,347, filed on Nov. 13, 2006.

(51) **Int. Cl.**
G06F 17/00 (2006.01)

(52) **U.S. Cl.** **463/17**

(58) **Field of Classification Search** 463/16–25
See application file for complete search history.

(56) **References Cited**

U.S. PATENT DOCUMENTS

2003/0216972 A1 * 11/2003 Gotou et al. 705/26
2005/0075954 A1 * 4/2005 Matsumoto et al. 705/28
2006/0038010 A1 * 2/2006 Lucas 235/385
2007/0124216 A1 * 5/2007 Lucas 705/27

FOREIGN PATENT DOCUMENTS

WO WO2004/094013 A1 11/2004

* cited by examiner

Primary Examiner—Ronald Laneau
(74) *Attorney, Agent, or Firm*—NDQ&M Watchstone LLP

(57) **ABSTRACT**

A gaming apparatus according to the present invention comprises: a roulette wheel including a plurality of pockets associated with respective numbers in advance; a memory for storing a plurality of control data for controlling the gaming apparatus so as to provide different weights on probabilities that a ball is housed in each of the pockets; and a controller, the controller controlling rotation of the roulette wheel and launching of the ball by referring to a single control data out of the control data, cumulatively accumulating part of betted currency value as a jackpot, and selecting another control data different from the single control data, out of the plurality of control data, and setting the selected control data as a reference target, when the accumulated jackpot reaches a predetermined amount.

6 Claims, 13 Drawing Sheets

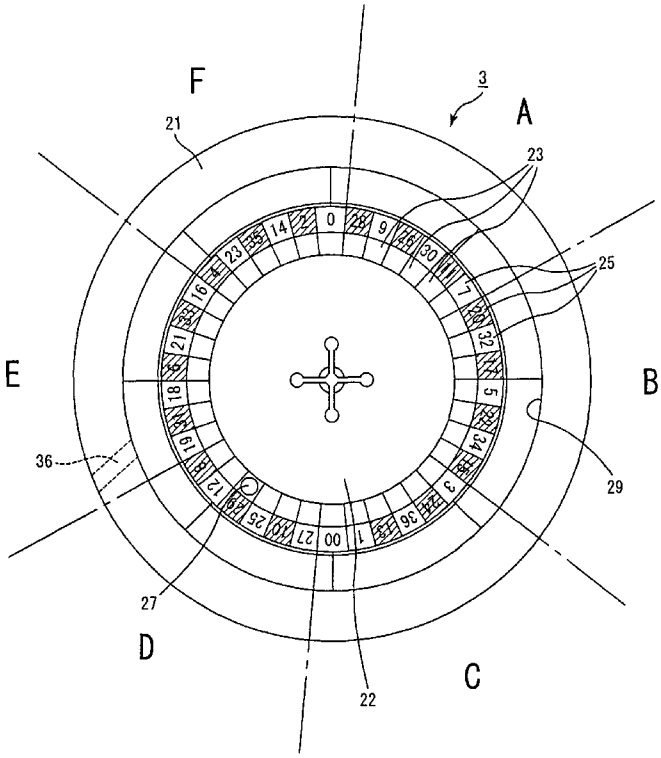

Light & Wonder v. Evolution
Light & Wonder Exhibit 1080

Fig. 1

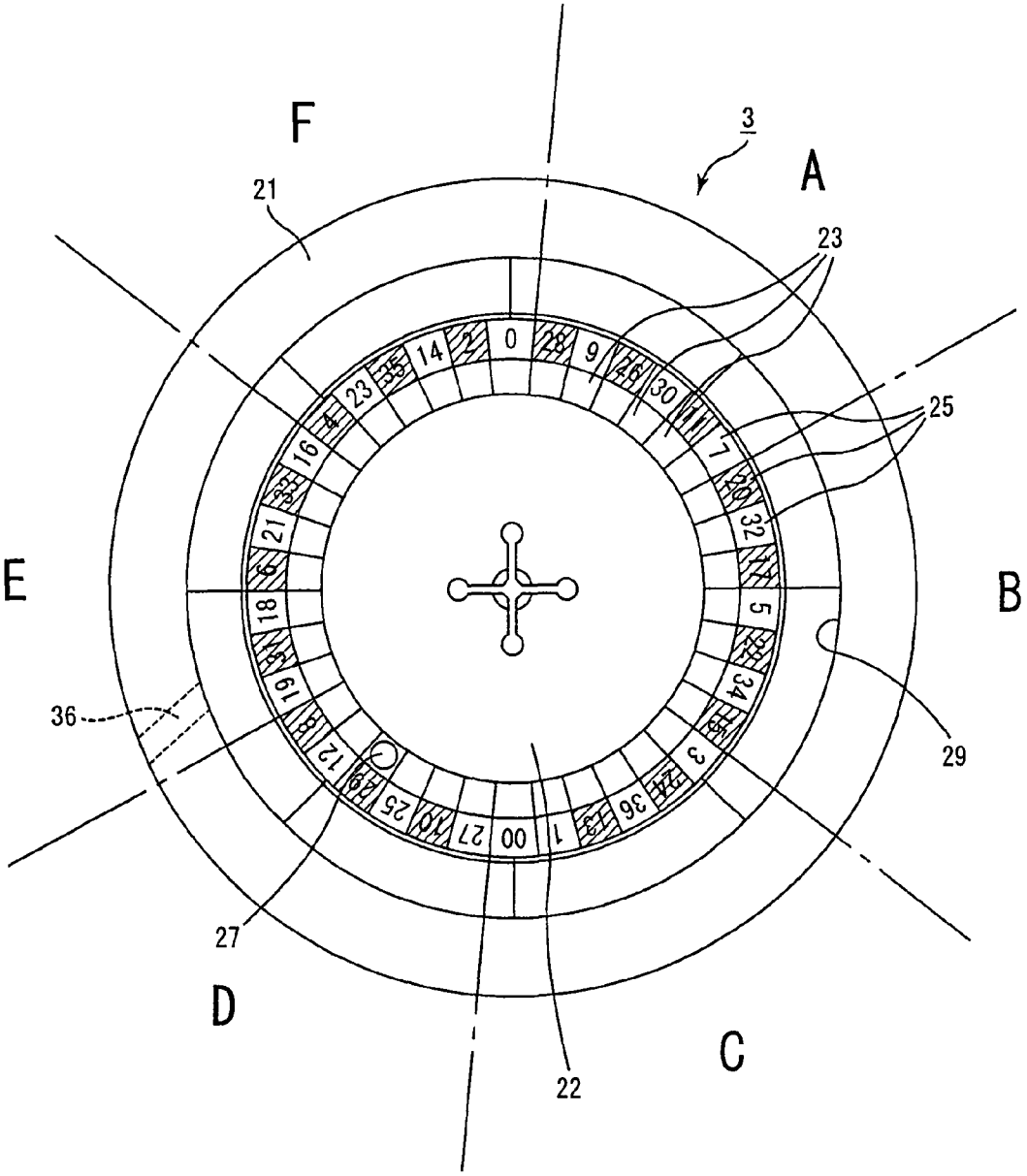
F
A
B
C
D
E
3
21
22
23
25
27
29
36
0
28
9
26
30
7
20
32
5
34
3
36
13
1
00
27
10
25
29
12
8
19
31
18
6
21
33
16
4
23
35
14
2

Fig. 2

Control data			Area
Motor driving time (sec)	Ball initial speed	Launching delay time (sec)	
10	Initial speed a	0	A
11	Initial speed b	0.1	B
12	Initial speed c	0.2	C
13	Initial speed d	0.3	D
14	Initial speed e	0.4	E
15	Initial speed f	0.5	F

Fig. 3

	MINI	MAJOR	MEGA
J1	1000	10000	100000
J2	2000	20000	200000
J3	3000	30000	300000
J4	4000	40000	400000
J5	5000	50000	500000
⋮	⋮	⋮	⋮

Fig. 4

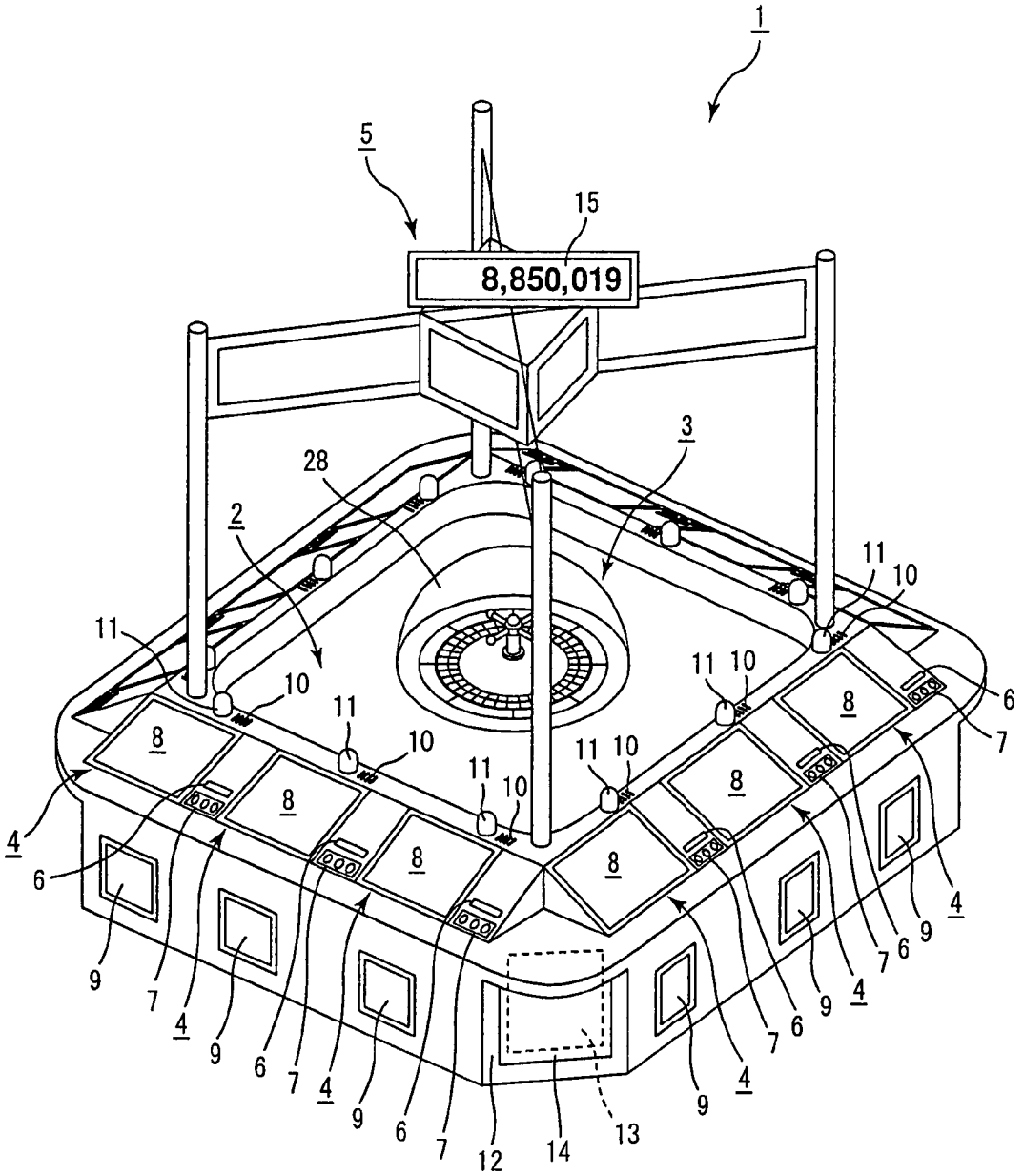

Fig. 5

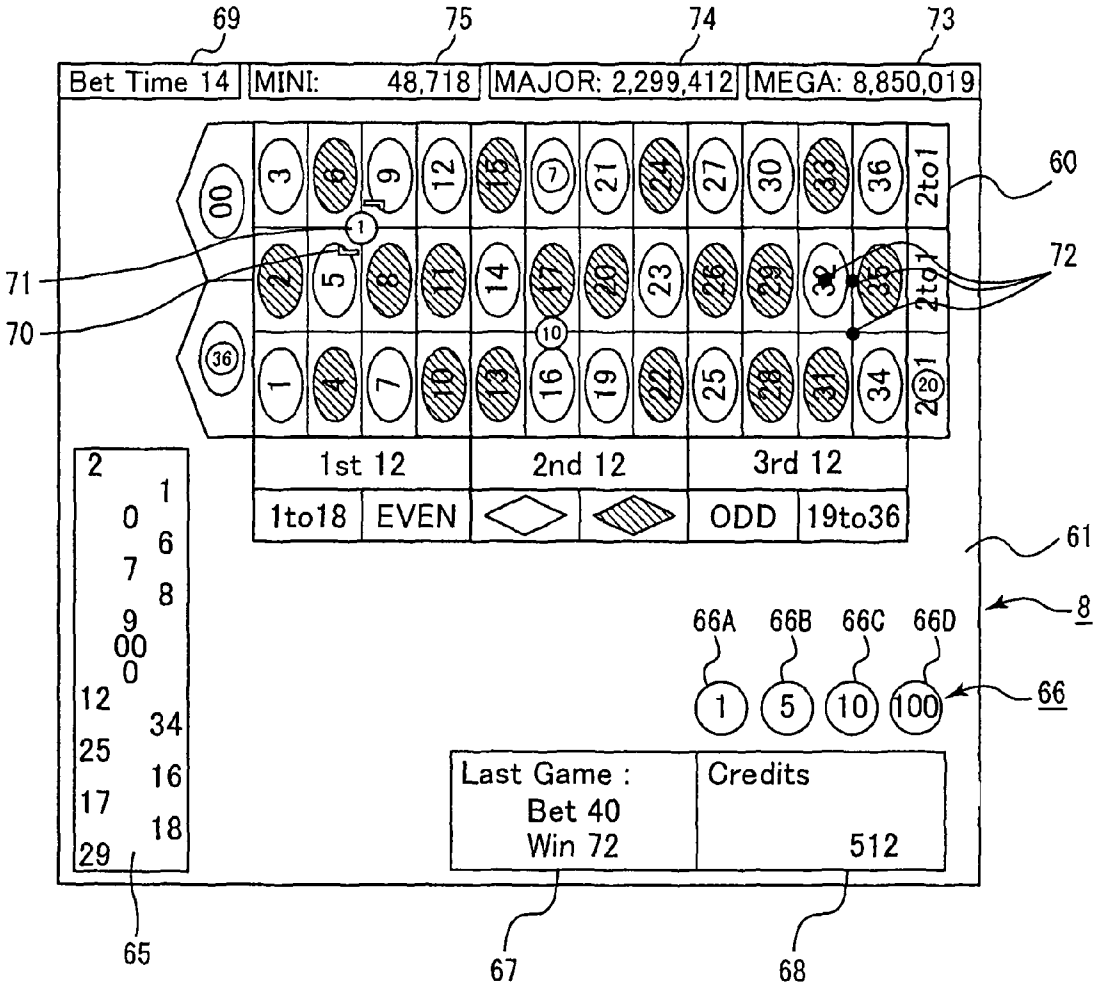
69
75
74
73
Bet Time 14
MINI: 48,718
MAJOR: 2,299,412
MEGA: 8,850,019
60
71
70
72
2to1
1st 12
2nd 12
3rd 12
1to18
EVEN
ODD
19to36
61
8
66A
66B
66C
66D
66
Last Game :
Bet 40
Win 72
Credits
512
65
67
68

Fig. 6

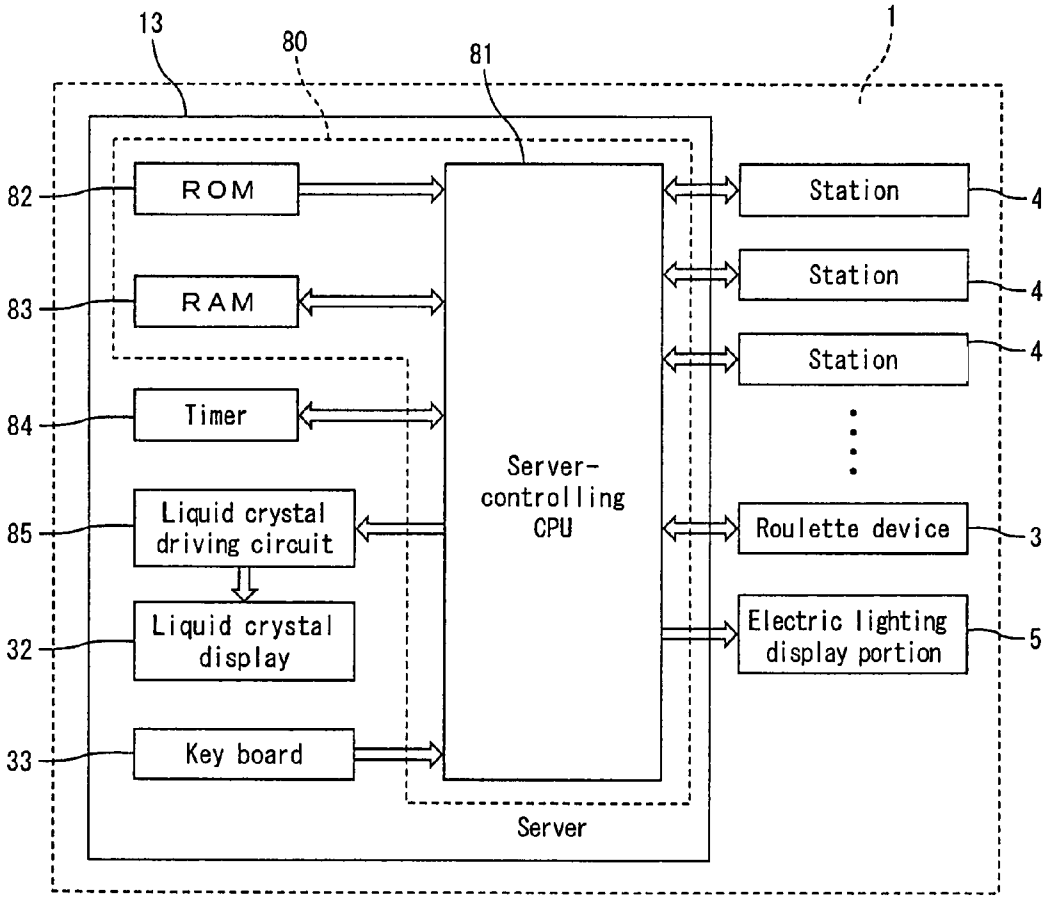
13
80
81
1
82
ROM
83
RAM
84
Timer
85
Liquid crystal driving circuit
32
Liquid crystal display
33
Key board
Server-controlling CPU
Server
Station
4
Station
4
Station
4
Roulette device
3
Electric lighting display portion
5

Fig. 7

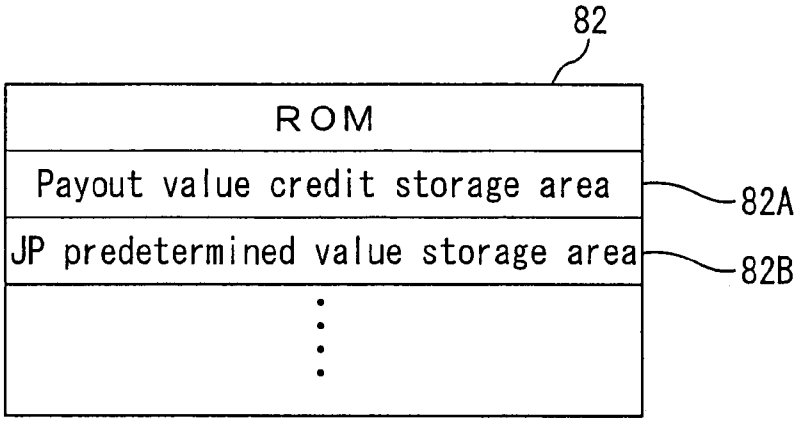
82
ROM
Payout value credit storage area
82A
JP predetermined value storage area
82B

Fig. 8

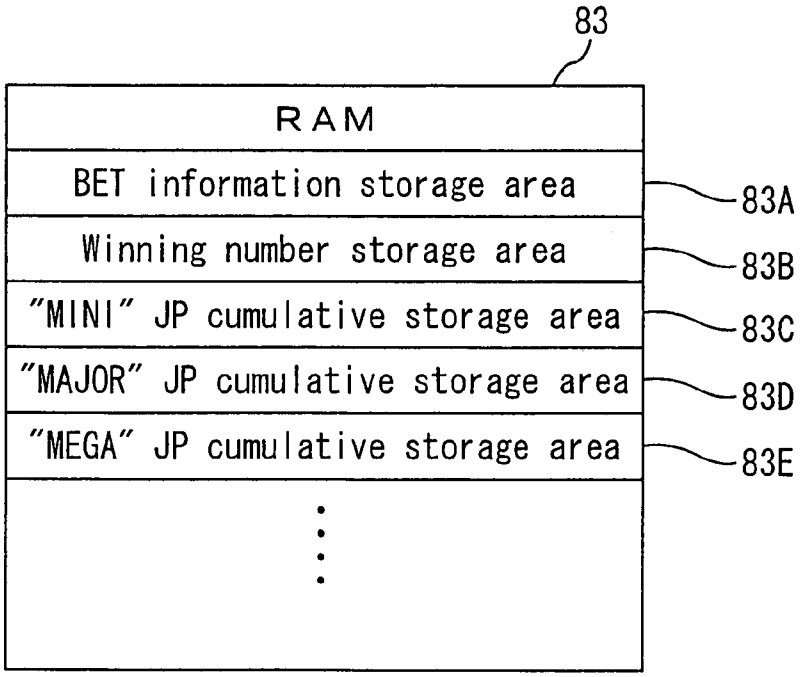
83
RAM
BET information storage area
83A
Winning number storage area
83B
"MINI" JP cumulative storage area
83C
"MAJOR" JP cumulative storage area
83D
"MEGA" JP cumulative storage area
83E

Fig. 9

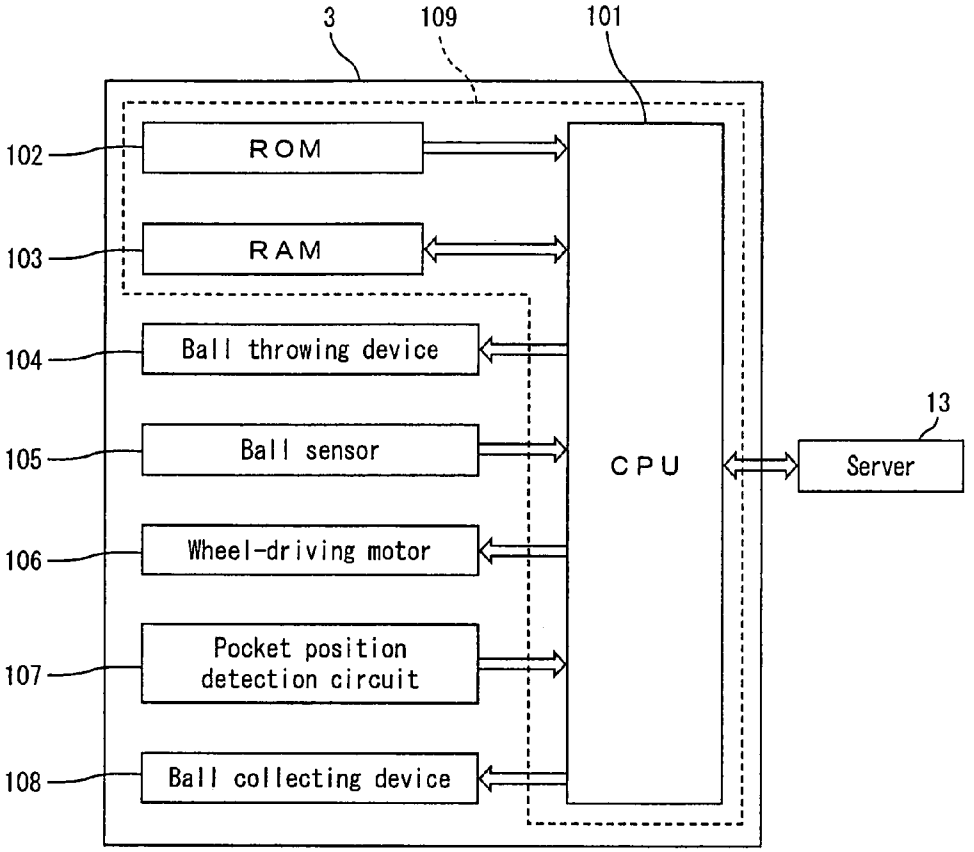
3
109
101
102
ROM
103
RAM
104
Ball throwing device
105
Ball sensor
106
Wheel-driving motor
107
Pocket position detection circuit
108
Ball collecting device
CPU
13
Server

Fig. 10

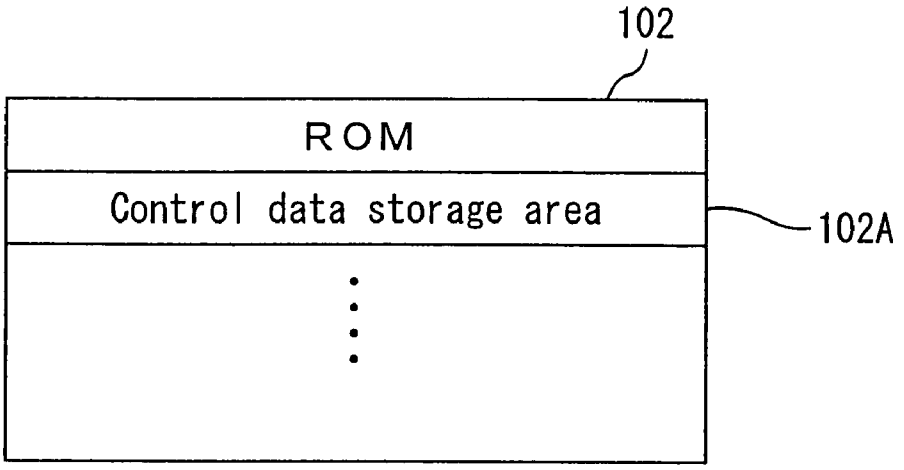

Fig. 11

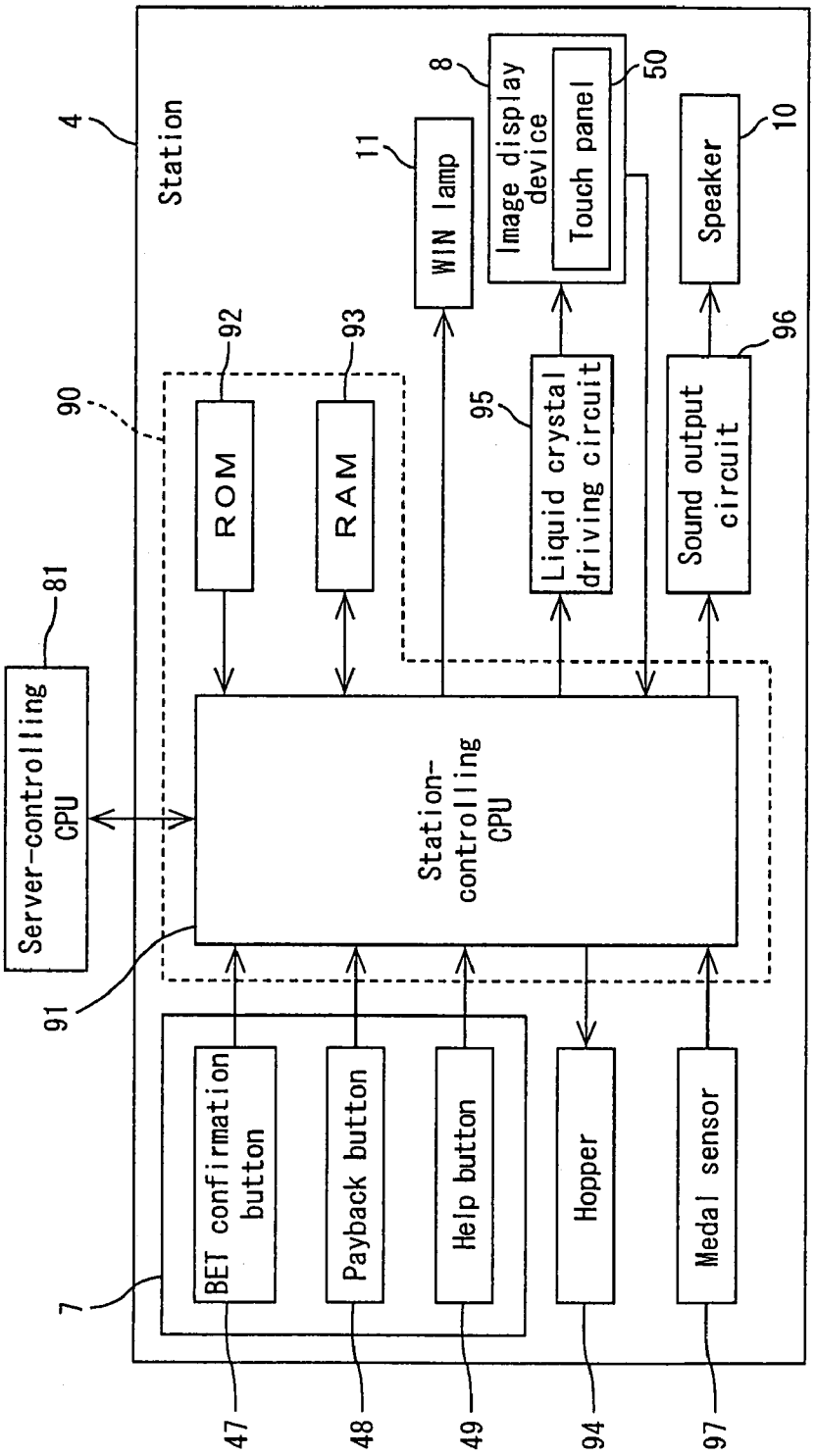
Station
4
WIN lamp
11
Image display device
8
Touch panel
50
Speaker
10
ROM
92
RAM
93
90
Liquid crystal driving circuit
95
Sound output circuit
96
Server-controlling CPU
81
Station-controlling CPU
91
BET confirmation button
Payback button
Help button
Hopper
Medal sensor
7
47
48
49
94
97

Fig. 12

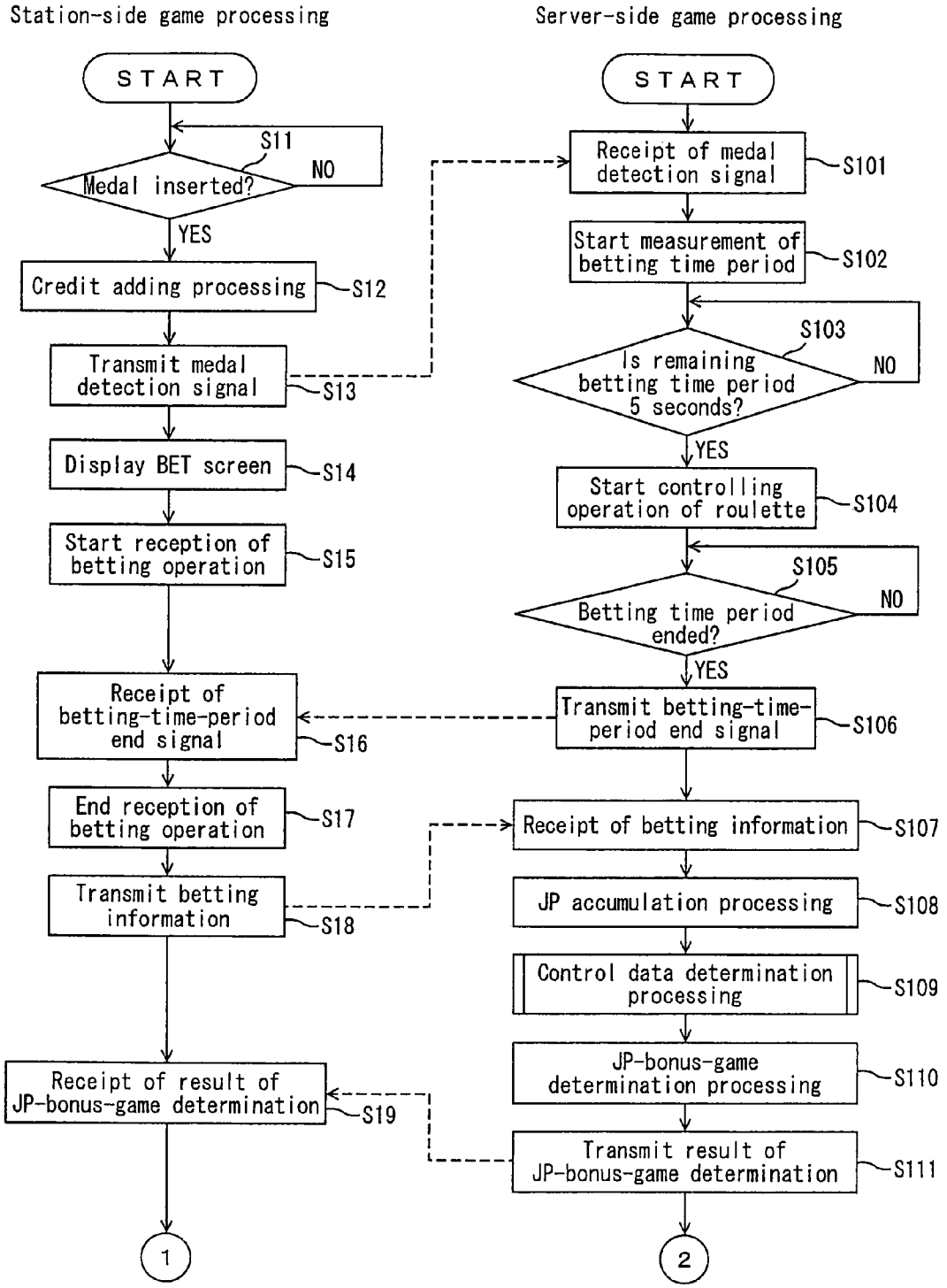
Station-side game processing
Server-side game processing
START
S11
Medal inserted?
NO
YES
Credit adding processing
S12
Transmit medal detection signal
S13
Display BET screen
S14
Start reception of betting operation
S15
Receipt of betting-time-period end signal
S16
End reception of betting operation
S17
Transmit betting information
S18
Receipt of result of JP-bonus-game determination
S19
1
START
Receipt of medal detection signal
S101
Start measurement of betting time period
S102
S103
Is remaining betting time period 5 seconds?
NO
YES
Start controlling operation of roulette
S104
S105
Betting time period ended?
NO
YES
Transmit betting-time-period end signal
S106
Receipt of betting information
S107
JP accumulation processing
S108
Control data determination processing
S109
JP-bonus-game determination processing
S110
Transmit result of JP-bonus-game determination
S111
2

Fig. 13

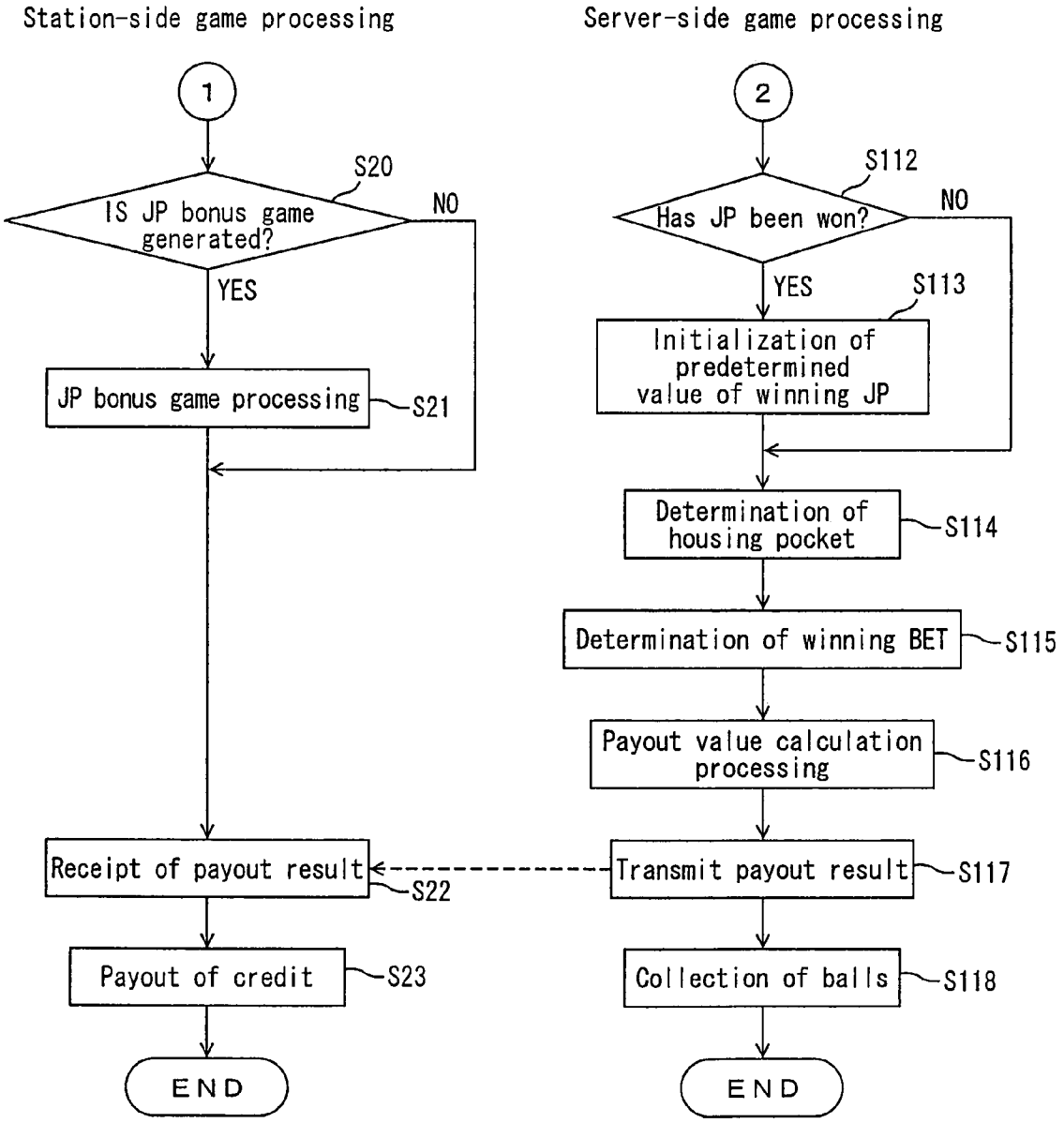
Station-side game processing
Server-side game processing
1
2
S20
IS JP bonus game generated?
NO
YES
JP bonus game processing
S21
S112
Has JP been won?
NO
YES
S113
Initialization of predetermined value of winning JP
Determination of housing pocket
S114
Determination of winning BET
S115
Payout value calculation processing
S116
Receipt of payout result
S22
Transmit payout result
S117
Payout of credit
S23
Collection of balls
S118
END
END

Fig. 14

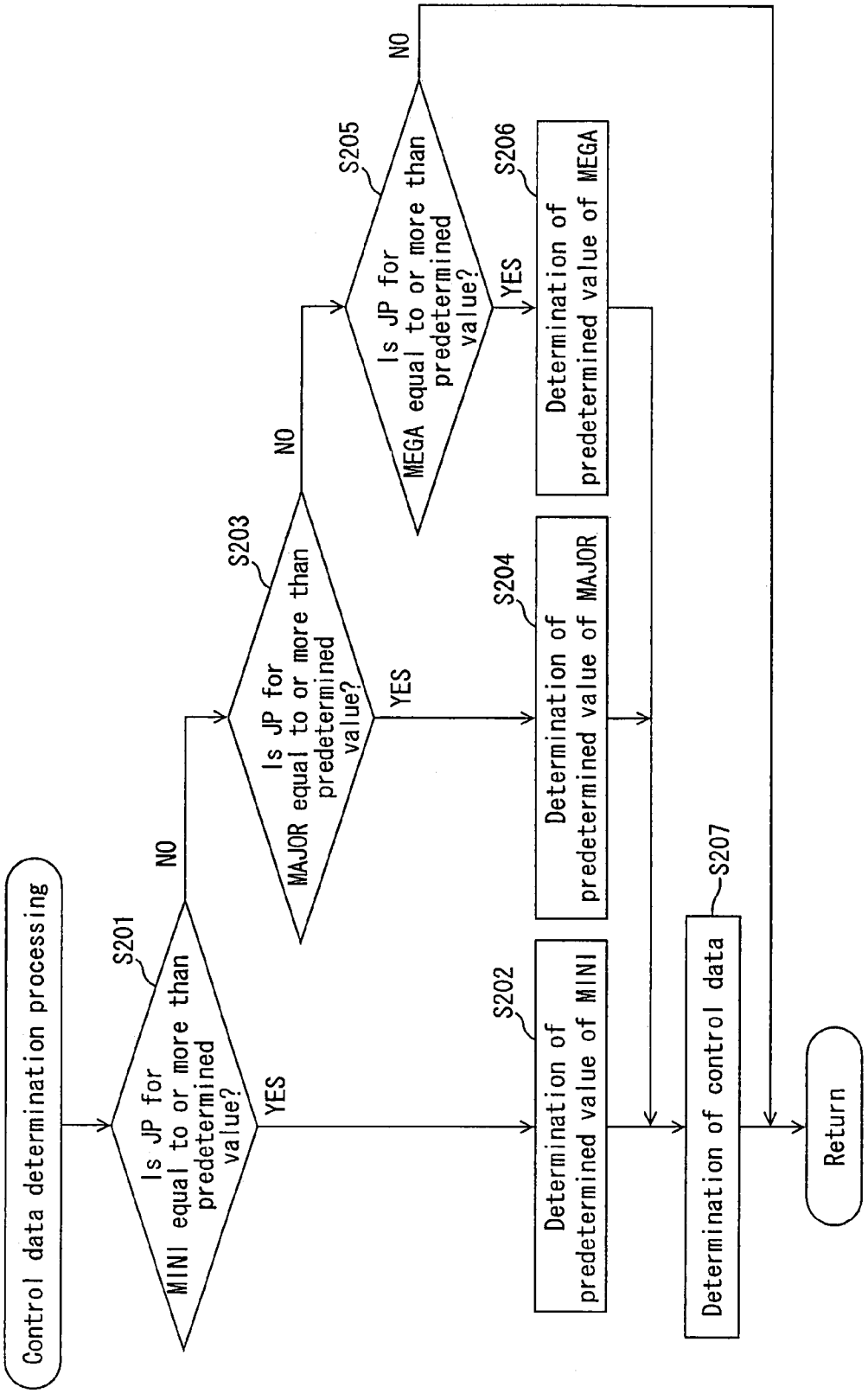
Control data determination processing
S201
Is JP for MINI equal to or more than predetermined value?
YES
NO
S202
Determination of predetermined value of MINI
S203
Is JP for MAJOR equal to or more than predetermined value?
YES
NO
S204
Determination of predetermined value of MAJOR
S205
Is JP for MEGA equal to or more than predetermined value?
YES
NO
S206
Determination of predetermined value of MEGA
S207
Determination of control data
Return

GAMING APPARATUS AND PLAYING METHOD THEREOF

CROSS-REFERENCE TO RELATED APPLICATIONS

This application claims benefit of priority based on U.S. Provisional Patent Application No. 60/858,347 filed on Nov. 13, 2006. The contents of this application are incorporated herein by reference in their entirety.

BACKGROUND OF THE INVENTION

1. Field of the Invention

The present invention relates to a gaming apparatus such as a roulette gaming machine, bingo gaming machine and the like, and a playing method of the same.

2. Discussion of the Background

Conventionally, when roulette games are played, a dealer throws a ball onto a roulette wheel, in general. However, in recent years, automatization of such roulette games has been advanced, and there have been suggested gaming apparatuses capable of processing roulette games in a full automatic manner, without the dealer throwing in the ball.

Among such gaming apparatuses, there are gaming apparatuses capable of throwing in a ball using air, as disclosed in WO 04/094013 A1. Gaming apparatuses which process roulette games in a full automatic manner are desired to drop and house a ball into respective pockets with an even probability. Therefore, among these gaming apparatuses, there are some gaming apparatuses designed to include a ball track having concavities and convexities on its surface for disturbing the behavior of the ball, in order to cause the ball to drop into respective pockets with an even probability.

It is an object of the present invention to enable changing the probabilities that a ball is housed in respective pockets as required, thereby offering new entertainment.

The contents of WO 04/094013 A1 are incorporated herein by reference in their entirety.

SUMMARY OF THE INVENTION

According to a first aspect of the present invention, there is provided a gaming apparatus having the following structure.

That is, the gaming apparatus according to the first aspect of the present invention is a gaming apparatus comprising: a roulette wheel including a plurality of pockets associated with respective numbers in advance; a memory for storing a plurality of control data for controlling the gaming apparatus so as to provide different weights on probabilities that a ball is housed in each of the pockets; and a controller. The controller controls rotation of the roulette wheel and launching of the ball by referring to a single control data out of the control data, cumulatively accumulates part of betted currency value as a jackpot, and selects another control data different from the single control data, out of the plurality of control data, and sets the selected control data as a reference target, when the accumulated jackpot reaches a predetermined amount.

According to a second aspect of the present invention, there is provided a gaming apparatus having the following structure.

That is, the gaming apparatus according to the second aspect of the present invention is a gaming apparatus comprising: a roulette wheel including a plurality of pockets associated with respective numbers in advance; a memory for storing a plurality of control data for controlling the gaming apparatus so as to provide different weights on probabilities that a ball is housed in each of the pockets; and a controller. The controller controls rotation of the roulette wheel and launching of the ball by referring to a single control data out of the control data, cumulatively accumulates part of betted currency value for a plurality of types of jackpots, and selects another control data different from the single control data, out of the plurality of control data, and sets the selected control data as a reference target, when any of the jackpots reaches a predetermined amount.

According to a third aspect of the present invention, there is provided a gaming apparatus having the following structure.

That is, the gaming apparatus according to the third aspect of the present invention is a gaming apparatus comprising: a roulette wheel including a plurality of pockets associated with respective numbers in advance; a memory for storing a plurality of control data for controlling the gaming apparatus so as to provide a relatively high weight on a probability that a ball is housed in any of the pockets constituting a single group, the single group belonging to a plurality of groups each of which consists of a predetermined number of the plurality of pockets, and the plurality of control data associated with each of the groups; and a controller. The controller controls rotation of the roulette wheel and launching of the ball by referring to a single control data out of the control data, cumulatively accumulates part of betted currency value as a jackpot, and selects another control data different from the single control data, out of the plurality of control data, and sets the selected control data as a reference target, when the accumulated jackpot reaches a predetermined amount.

According to a fourth aspect of the present invention, there is provided a playing method of a gaming apparatus having the following structure.

That is, the playing method of a gaming apparatus according to the fourth aspect of the present invention is a playing method of a gaming apparatus comprising the steps of: controlling rotation of a roulette wheel and launching of a ball by referring to a single control data, the single control data selected out of a plurality of control data for controlling the gaming apparatus so as to provide different weights on probabilities that the ball is housed in any of a plurality of pockets included in the roulette wheel and associated with respective numbers in advance; cumulatively accumulating part of betted currency value as a jackpot, and selecting another control data different from the single control data, out of the plurality of control data, and setting the selected control data as a reference target, when the accumulated jackpot reaches a predetermined amount.

According to a fifth aspect of the present invention, there is provided a playing method of a gaming apparatus having the following structure.

That is, the playing method of a gaming apparatus according to the fifth aspect of the present invention is a playing method of a gaming apparatus comprising the steps of: controlling rotation of a roulette wheel and launching of a ball by referring to a single control data, the single control data selected out of a plurality of control data for controlling the gaming apparatus so as to provide different weights on probabilities that the ball is housed in any of a plurality of pockets included in the roulette wheel and associated with respective numbers in advance; cumulatively accumulating part of betted currency value for a plurality of types of jackpots, and selecting another control data different from the single control data, out of the plurality of control data, and setting the selected control data as a reference target, when any of the jackpots reaches a predetermined amount.

Light & Wonder v. Evolution
Light & Wonder Exhibit 1080

According to a sixth aspect of the present invention, there is provided a playing method of a gaming apparatus having the following structure.

That is, the playing method of a gaming apparatus according to the sixth aspect of the present invention is a playing method of a gaming apparatus comprising the steps of: controlling rotation of a roulette wheel and launching of a ball by referring to a single control data, the single control data selected out of a plurality of control data for controlling the gaming apparatus so as to provide a relatively high weight on a probability that the ball is housed in any of the pockets constituting a single group, the single group belonging to a plurality of groups each of which consists of a predetermined number of pockets out of a plurality of pockets being included in the roulette wheel and being associated with respective numbers in advance; cumulatively accumulating part of betted currency value as a jackpot, and selecting another control data different from the single control data, out of the plurality of control data, and setting the selected control data as a reference target, when the accumulated jackpot reaches a predetermined amount.

BRIEF DESCRIPTION OF THE DRAWINGS

FIG. **1** is a plan view of a roulette device according to the present embodiment;

FIG. **2** is a view illustrating exemplary control data;

FIG. **3** is a view illustrating exemplary predetermined values for jackpots;

FIG. **4** is an external perspective view illustrating the general structure of a roulette gaming machine according to the present embodiment;

FIG. **5** is a view illustrating an exemplary image displayed to an image display device;

FIG. **6** is a block diagram illustrating the internal structure of the roulette gaming machine according to the present embodiment;

FIG. **7** is a schematic view illustrating a storage area of a ROM in the roulette gaming machine according to the present embodiment;

FIG. **8** is a schematic view illustrating a storage area of a RAM in the roulette gaming machine according to the present embodiment;

FIG. **9** is a block diagram illustrating the internal structure of the roulette device according to the present embodiment;

FIG. **10** is a schematic view illustrating a storage area of a ROM in the roulette device according to the present embodiment;

FIG. **11** is a block diagram illustrating the internal structure of a station according to the present embodiment;

FIG. **12** is a flow chart illustrating a game processing in the roulette gaming machine according to the present embodiment;

FIG. **13** is a flow chart illustrating a game processing in the roulette gaming machine according to the present embodiment; and

FIG. **14** is a flow chart illustrating a subroutine of a control data determination processing.

DESCRIPTION OF THE EMBODIMENTS

FIG. **1** is a plan view of a roulette device according to the present embodiment. FIG. **2** is a view illustrating exemplary control data. FIG. **3** is a view illustrating exemplary predetermined values for jackpots (hereinafter, also referred to as "JP"). FIG. **4** is an external perspective view illustrating the general structure of a roulette gaming machine according to the present embodiment. While the roulette gaming machine **1** is a standalone type gaming machine which is not connected to a network, the present invention can be applied to a gaming machine connected to a network.

As illustrated in FIG. **1**, the roulette device **3** included in the roulette gaming machine **1** (see FIG. **4**) includes a frame member **21** secured to a cabinet **2** (see FIG. **4**), and a roulette wheel **22** which is rotatably housed and supported inside the frame member **21**. On an upper surface of the roulette wheel **22**, there are formed a large number of concave-shaped number pockets **23** (a total of 38 number pockets in the present embodiment). Further, on the upper surface of the roulette wheel **22** in the outer directions of the respective number pockets **23**, there are formed number display plates **25** displaying respective numbers of "0", "00", and "1" to "36", in association with the respective number pockets **23**.

A ball throwing port **36** is formed in the frame member **21**. A ball throwing device **104** (see FIG. **9**) is connected to the ball throwing port **36**, so that a ball **27** can be thrown onto the roulette wheel **22** from the ball throwing port **36** by being driven by the ball throwing device **104**. Further, the roulette device **3** is entirely covered with a hemispherical transparent acrylic cover member **28** (see FIG. **4**) thereabove.

Below the roulette wheel **22**, there is provided a wheel-driving motor **106** (see FIG. **9**), so that the roulette wheel **22** is rotated by being driven by the wheel driving motor **106**.

Further, metal plates (not illustrated) are mounted at predetermined intervals below the roulette wheel **22**, and these metal plates are detected by a proximity sensor included in a pocket position detection circuit **107** (see FIG. **9**), which enables detecting the positions of the number pockets **23**.

The frame member **21** is gently inclined in an inward direction, and a guide wall **29** is formed at a middle position thereof. The guide wall **29** is for guiding the thrown ball **27** against a centrifugal force to cause the ball **27** to roll. As a rotation speed of the ball **27** decreases and, thus, the centrifugal force thereof decreases, the ball **27** rolls along the inclined surface of the frame member **21** and travels inwardly to reach the rotating roulette wheel **22**. Then, the ball **27** which has rolled and reached the roulette wheel **22** passes over the number display plates **25** outside the still rotating roulette wheel **22** and then is housed in one of the number pockets **23**. As a result, a ball sensor **105** (see FIG. **9**) detects the number displayed to the number display plate **25** corresponding to the number pocket **23** housing the ball, and this number becomes a winning number.

Rotation of the roulette wheel **22** and launching of the ball **27** are performed based on control data.

As illustrated in FIG. **2**, the control data includes motor driving time, ball initial speed, and launching delay time.

The motor driving time is for driving the wheel driving motor **106** (see FIG. **9**). The roulette wheel **22** is rotated at a predetermined rotation speed by the wheel-driving motor **106** for a length of time corresponding to a motor driving time. Further, after the roulette wheel **22** is released from the driving by the wheel-driving motor **106**, the rotation speed of the roulette wheel **22** gradually decreases and the roulette wheel **22** finally stops. Further, the ball initial speed is an initial speed for throwing the ball **27** from the ball throwing device **104**. The launching delay time is a time since a predetermined number pocket **23** passes through a predetermined position until a ball is launched, during the rotation of the roulette wheel **22**.

As illustrated in FIG. **1**, the roulette wheel **22** is divided into 6 areas, which are areas A to F. Each area is constituted by 6 or 7 number pockets **23** adjacent to one another.

Light & Wonder v. Evolution
Light & Wonder Exhibit 1080

The respective control data are determined so as to provide a higher weight on the probability that the ball **27** is housed in one of the areas A to F. For example, when the rotation of the roulette wheel **22** and the launching of the ball **27** are controlled based on the control data "a motor driving time of 10 sec, a ball initial speed a and a launching delay time of 0," the respective control data are determined so as to provide a higher weight on the probability that the ball **27** is housed in the area A.

In the present embodiment, the roulette wheel **22** rotates counterclockwise, and the ball **27** moves clockwise. For example, when the ball initial speed and the launching delay time are fixed, as the motor driving time is made longer, an area with a high probability of housing the ball **27** (hereinafter also referred to as a high probability area) is changed in the following order: A→B→C→D→E→F→A and so forth.

Further, for example, when the motor driving time and the launching delay time are fixed, as the ball initial speed is made higher, the high probability area is changed in the following order: A→B→C→D→E→F→A and so forth.

Moreover, for example, when the motor driving time and the ball initial speed are fixed, as the launching delay time is made longer, the high probability area is changed in the following order: A→B→C→D→E→F→A and so forth.

Accordingly, in the present invention, when the control data includes any one of data on wheel rotation control (motor driving time), data on timing for launching the ball (launching delay time), and data on the initial speed of the ball being launched (ball initial speed), a plurality of control data different in high probability area can be set, thereby providing different weights on the probability of each number pocket **23** housing the ball **27**.

Further, in the present embodiment, when the initial speed is changed from an initial speed "a" to an initial speed "b", from the initial speed "b" to an initial speed "c", from the initial speed "c" to an initial speed "d" and so forth, the high probability area is shifted by one area (e.g. the area is shifted from the area A to the area B). Further, every time the launching delay time is made longer by 0.1 second, the high probability area is shifted by one area. Moreover, every time the motor driving time is made longer by 1 second, the high probability area is shifted by five areas. Therefore, by combination of these, it is possible to set a plurality of control data different in high probability areas, so as to provide different weights on the probability of the each number pocket **23** housing the ball **27**.

As in the present embodiment, when the control data is data including the combination of the data on wheel rotation control (motor driving time), the data on timing for launching the ball (launching delay time), and the data on the initial speed of the ball being launched (ball initial speed), apparent variations with respect to the player (e.g. the rotating time of the roulette wheel **22** is long, the initial speed of the ball **27** is high) can be involved.

Friction at the rotational axial section of the roulette wheel **22**, the surface shape of the roulette wheel **22** (e.g. depression or distortion), and the like may vary among the roulette gaming machines **1** due to a variety of factors in manufacturing thereof. Hence there is a case where, even when common control data is used in each of the roulette gaming machines **1**, the areas where the ball **27** is finally housed vary among the roulette gaming machines **1**. Therefore, the control data may be set such that, for example, after completion of the manufacturing, tests are conducted with a variety of parameters included in the control data being changed as appropriate, to organize statistics concerning which parameter may allow which area to have a high probability of housing the ball **27**. Namely, the control data may vary among the roulette gaming machines **1**.

Moreover, even when the areas that finally house the ball **27** vary among the roulette gaming machines **1**, the common control data may be used in each of the roulette gaming machines **1**. This is because the probability of housing the ball in some area should just be relatively high based on the control data in each of the roulette gaming machines **1**.

The control data to be the reference target is switched when the accumulated JP reaches a predetermined value (e.g. 10000). The predetermined value of JP corresponds to the predetermined amount of JP in the present invention.

In the present embodiment, a case is described where the control data to be the reference target is switched when the number of accumulated medals (value of JP) reaches the predetermined amount (predetermined value). However, the present invention is not limited to thereto. For example, in a case of adopting a configuration of playing a game by means of money, the control data to be the reference target may be switched when the accumulated value of money reaches the predetermined amount (predetermined value).

In the roulette gaming machine **1** according to the present embodiment, as will be described later, there are prepared three types of JP, i.e., "MEGA", "MAJOR", and "MINI". When at least one JP among these JPs reaches the predetermined value illustrated in FIG. **3**, the control data is switched. The predetermined values for JPs are set by stages, such as **1000**, **2000**, **3000** and so forth as illustrated in FIG. **3**.

As for the JP having reached the predetermined value, the predetermined value is updated. For example, when the JP for "MINI" has reached the predetermined value J**1** (**1000**) in FIG. **3**, J**2** (**2000**) is set as a new predetermined value. When the JP for "MINI" has reached the predetermined value J**2**, J**3** (**3000**) is set as a new predetermined value.

Further, if a JP is won, the predetermined value of this JP is returned to J**1** as the initial value. It should be noted that, the initial value of the predetermined value for a JP is not limited to the example in FIG. **3**.

In the present embodiment, as illustrated in FIG. **3**, different predetermined values are set for each of the JPs. However, in the present invention, the predetermined values for JPs are not limited to this example and may, for example, be common among all the JPs.

Also, the predetermined value for a JP is not limited to the example illustrated in FIG. **3** and can be set as appropriate.

Moreover, how to set a new predetermined value in updating the predetermined value for a JP is not limited to the above-mentioned example. For example, a random number may be used to select a single predetermined value out of a plurality of predetermined values.

While, in the example, there has been described a case where the areas A to F are constituted by 6 or 7 number pockets **23** adjacent to one another, there is no particular limitation on the number of pockets belonging to a single group, in the present invention. Further, the respective groups can be constituted by the same number of pockets or different numbers of pockets.

Further, while, in the example, there has been described a case where the number pockets **23** are divided into the 6 areas (groups), which are the areas A to F, the number of areas (groups) is not limited to 6 in the present invention.

In the example, there has been described a case where the areas A to F are not overlapped with one another. Namely, there has been described a case where the pockets belonging to a single group do not belong to the other groups. However,

the present invention is not limited thereto, and a single pocket can belong to a plurality of groups.

While, in the example, there has been described a case where a plurality of control data are provided in association with the respective areas (groups), it is necessary only that a plurality of control data are provided, but it is not necessary that they are associated with the respective areas (groups), in the present invention.

While, in the example, there has been described a case where the control data is constituted by motor driving time, ball initial speeds and launching delay time, the control data of the present invention is not limited thereto, but may be data including one of data relating to wheel rotation control (motor driving time), data relating to a timing of ball launching (launching delay time), and data relating to an initial speed for launching a ball (ball initial speeds), or a combination thereof.

Such data relating to wheel rotation control may be, for example, rotation speeds of the roulette wheel when it is driven by the motor, as well as motor driving time.

In the foregoing example, the case was described where the control data corresponds one-to-one to the area, e.g. control data with "the motor driving time: 10 sec, the ball initial speed: a, the launching delay time: 0" corresponds to the area A. However, the control data in the present invention is not limited thereto so long as the control data serves to perform control so as to provide different weights on the probability of each of the pockets housing the ball. For example, the control data may be data where the probability of the pocket housing the ball is fixed, the pocket belonging to each area (group), e.g., the probability that the number pocket **23** belonging to the area A houses the ball **27** is 70%, the probability that the number pocket **23** belonging to the area B houses the ball **27** is 20%, or the probability that the number pocket **23** belonging to the area C houses the ball **27** is 10%. In such a configuration, for example, a single group may be determined based on the above probabilities to control such that the pocket belonging to the determined group houses the ball.

Next, the structure of the roulette gaming machine **1** will be described.

As illustrated in FIG. **4**, the roulette gaming machine **1** includes the cabinet **2** forming a main body, the roulette device **3** provided at a substantially center portion of the upper surface of the cabinet **2**, a plurality of stations **4** (12 stations, in the present embodiment) installed around the roulette device **3** to surround the roulette device **3**, and an electric lighting display portion **5** provided above the cabinet **2**.

The stations **4** include, at least, a medal insertion port **6** for inserting a currency value, a control portion **7** constituted by a plurality of control buttons and the like which enable a player to input predetermined commands, and an image display device **8** capable of displaying images relating to games. Further, the stations **4** receive betting operations by the player. The player can process games being deployed, by operating the touch panel, the control portion **7** and the like, while looking at the image being displayed to the image display device **8**.

In the roulette gaming machine **1**, a medal or electronic valuable information (e.g. credit) is used as the currency value. However, the currency value is not particularly limited. For example, it can be exemplified by a coin, a bill, a token and electronic money.

Further, medal payout ports **9** are provided in the side surfaces of the cabinet **2** in which the stations **4** are installed. Further, above the image display devices **8** in the respective stations **4**, to the right thereof, there are provided speakers **10** for generating music, effect sounds and the like.

Above the image display devices **8** in the respective stations **4**, there are provided WIN lamps **11**. In the event of the occurrence of winning relating to numbers ("0", "00" or "1" to "36" in the present embodiment) on which the player betted at the station **4** during a game, the WIN lamp **11** in the winning station **4** is lighted. Further, during JP bonus games for acquiring a JP, in the event that a station **4** acquires a JP, the WIN lamp **11** in the station **4** which acquired the JP is similarly lighted. Further, the WIN lamps **11** are provided at positions viewable from all the installed stations **4** (12 stations, in the present embodiment), which enables other players playing games with the same roulette gaming machine **1** to recognize the WIN lamps **11** being lighted anytime.

Inside of each medal insertion port **6**, there is provided a medal sensor (not illustrated) which distinguishes the currency value inserted from the medal insertion port **6**, such as medals, and counts the inserted medals. Further, inside of each medal payout port **9**, there is provided a hopper (not illustrated) which pays out predetermined numbers of medals from the medal payout port **9**.

A server **13** is placed inside of a corner portion **12** positioned at a corner of the cabinet **12**. The server **13** is housed within the corner portion **12** in general in order to prevent it from being operated by players, but a corner door **14** provided at the corner portion **12** can be opened using a key switch in order to enable operations of the server **13**. Further, by operating the server **13**, various types of setting can be made for the roulette gaming machine **1**.

In the electric lighting display portion **5**, there is provided a JP-value display portion **15** which displays the value of JP. For the JP "MEGA", 0.15% of the credits betted during games at all the 12 stations **4** are cumulatively stored. For the JP "MAJOR", 0.20% of the betted credits are cumulatively stored. For the JP "MINI", 0.30% of the betted credits are cumulatively stored. Further, in the event that the player wins any one of the JP during JP bonus games which will be described later, credits corresponding to the cumulative value accumulated for the corresponding JP are paid out to a predetermined station **4**. The JP-value display portion **15** displays the cumulative value for the JP "MEGA", out of the three types of JP. Further, the JP-value display portion **15** is provided at the top portion of the electric lighting display portion **5**, which enables all players playing games at the stations **4** to view the content of the display thereto.

FIG. **5** is a view illustrating an exemplary image displayed to an image display device.

As illustrated in FIG. **5**, during games, the image display device **8** displays, thereto, a BET screen **61** having a table-type betting board **60**. The player can bet chips using his or her own credits, by operating the touch panel **50** (see FIG. **11**) provided in the front surface of the image display device **8**.

First, based on FIG. **5**, there will be described the BET screen **61** which is displayed during games. In the table-type betting board **60** being displayed in the BET screen **61**, 38 types of numbers "0", "00" and "1" to "36" are displayed and arranged in a grid shape. Further, specific BET areas are similarly arranged in a grid shape, wherein the specific BET areas are for specifying "odd numbers", "even numbers", "the types of colors of the number display plates (red or black)", "certain numerical ranges (for example, "1" to "12" and the like) so that chips can be betted thereon.

Under the table-type betting board **60**, there are displayed a result history display portion **65**, unit BET buttons **66**, a payback result display portion **67**, and a number-of-credit display portion **68**.

The result history display portion **65** displays a list of winning numbers resulted from the previous games (in this case, "a single game" refers to a series of operations starting with betting by a player in any of the stations **4** and then throwing the ball **27** into the number pockets **23** and ending with paying back credits based on the winning number). In this case, when a single game ends, a new winning number is added and displayed to the top of the list, which enables recognizing the history of winning numbers resulted from up to 16 games.

Further, the unit BET buttons **66** are for betting chips on a BET area **72** (over a grid having a number or mark or over a line defining grids) specified by the player. The unit BET button **66** is constituted by four buttons, which are a 1-BET button **66**A, a 5-BET button **66**B, a 10-BET button **66**C and a 100-BET button **66**D.

At first, the player specifies a BET area **72** on which he or she desires to bet, with a cursor **70** which will be described later, by directly pushing it on the screen. By pushing the 1-BET button **66**A at this state, the player can bet one chip at a time (i.e., every time the 1-BET button **66**A is pushed with fingers or the like, the number of BETs is increased in the order of "1", "2", "3" and so forth). By pushing the 5-BET button **66**B, the player can bet five chips at a time (i.e., every time the 5-BET button **66**B is pushed with fingers or the like, the number of BETs is increased in the order of "5", "10", "15" and so forth). By pushing the 10-BET button **66**C, the player can bet ten chips at a time (i.e., every time the 10-BET button **66**C is pushed with fingers or the like, the number of BETs is increased in the order of "10", "20", "30" and so forth). Further, by pushing the 100-BET button **66**D, the player can bet 100 chips at a time (every time the 100-BET button **66**D is pushed with fingers or the like, the number of BETS is increased in the order of "100", "200", "300" and so forth).

The payback result display portion **67** displays the number of chips betted by the player and the number of paid-back credits in the previous game. In this case, the number of paid-back credits minus the number of betted chips indicates the number of credits that the player newly acquired in the previous game.

The number-of-credit display portion **68** displays the number of credits possessed by the current player. If chips are betted, the number of credits is decreased by an amount corresponding to the number of BETs (1 BET corresponds to 1 credit). In the event of that winning relating to the betted chips occurs and credits are paid back, the number of credits is increased by the number of paid-back credits. Further, if the number of credits possessed by the player becomes 0, the games end.

Further, above the table-type betting board **60**, a BET time display portion **69** is provided. The BET time display portion **69** displays the remaining time during which the player can bet. The BET time display portion **69** displays "20" at the start of reception of betting operations, then decreases the number by one at every second and displays "0" at the end of reception of betting operations. Further, when the remaining betting time for the player reaches 5 seconds at each station **4**, the ball throwing device is driven to throw the ball **27** onto the roulette board.

Further, to the right of the BET-time display portion **69**, there are provided a MEGA display portion **73** which displays the number of credits accumulated for the JP "MEGA" until the present time, a MAJOR display portion **74** which displays the number of credits accumulated for the JP "MAJOR" until the present time, and a MINI display portion **75** which displays the number of credits accumulated for the JP "MINI" until the present time. The MEGA display portion **73** displays a number of credits resulted from cumulatively accumulating 0.15% of the credits betted in every single game at all 12 stations **4**. The MAJOR display portion **74** displays a number of credits resulted from cumulatively accumulating 0.20% of the betted credits. The MINI display portion **75** displays a number of credits resulted from cumulatively accumulating 0.30% of the betted credits. The MEGA display portion **73**, the MAJOR display portion **74** and the MINI display portion **75** display numerical values which are common among all the stations **4**. In the event that the player wins a JP during a JP bonus game, the credits for the JP won by the player are paid out, out of the three types of JP displayed to the display portions **73** to **75**, and, after the paying out, the JP display portion displays an initial numerical value (i.e., 200 credits for "MINI", 5000 credits for "MAJOR" and 50000 credits for "MEGA").

Further, on the table-type betting board **60**, the cursor **70** indicating the BET area **72** being currently selected by the player is displayed. Further, a chip mark **71** indicating the number of chips betted up to the present time and the BET area **72** is displayed, wherein the number displayed to the chip mark **71** indicates the number of betted chips. For example, as illustrated in FIG. **5**, a "7" chip mark **71** placed on the "18" grid indicates that 7 chips are being betted on the number "18". Further, such a method for betting on only a single number is a betting method called "Straight BET".

Further, a "1" chip mark **71** placed at the intersection of the "5", "6", "8" and "9" grids indicates that all the four numbers are covered, meaning a single chip is being betted on the four numbers "5", "6", "8" and "9". Further, such a method covering four numbers for betting on the four numbers is a betting method called "Corner BET".

As other betting methods, there are "Split BET" which covers two numbers using the line between the two numbers so as to bet on two numbers; "Street BET" which covers three numbers using an end of a lateral single row of numbers (a vertical single row, in FIG. **5**) so as to bet on three numbers (for example, "13", "14" and "15"); "Five BET" which covers five numbers using the line between the numbers "00" and "3" so as to bet on five numbers "0", "00", "1", "2" and "3"; "Line BET" which covers six numbers using the space between two lateral rows of numbers (two vertical rows in FIG. **5**) so as to bet on six numbers (for example, "13", "14", "15", "16", "17" and "18"); "Column BET" which covers twelve numbers using a "2-to-" grid so as to bet on twelve numbers; and "Dozen BET" which cover twelve numbers using any of "1st-12", "2nd-12" and "3rd-12" grids so as to bet on twelve numbers. Further, there is a method which covers 18 numbers so as to bet on 18 numbers, by specifying the 18 numbers from any of the colors of the number display plates ("red" or "black"), odd numbers or even numbers, and numbers equal to or less than 18 or numbers equal to or greater than 19, using 6 grids provided at the lowermost stage of the table-type betting board **60**. Here, these plurality of betting methods result in different credit payout values (payout value ratios) per single-chip, in the event of the occurrence of winning relating to betted chips.

When a player performs betting through the BET screen **61** having the above-mentioned configuration, the player specifies a BET area **72** (over a grid having a number or mark or over a line defining grids) on which he or she desires to bet, by directly pushing it on the screen with his or her finger. As a result, the cursor **70** moves to the specified BET area **72**.

Thereafter, by pushing each unit button (the 1-BET button **66**A, the 5-BET button **66**B, the 10-BET button **66**C and the 100-BET button **66**D), out of the unit BET buttons **66**, a

number of chips corresponding to the number of units are betted on the specified BET area **72**. For example, by pushing the 10-BET button **66**C four times, pushing the 5-BET button **66**B a single time and pushing the 1-BET button **66**A three times, it is possible to bet a total of 48 chips.

FIG. **6** is a block diagram illustrating the internal structure of the roulette gaming machine according to the present embodiment.

As illustrated in FIG. **6**, the roulette gaming machine **1** is constituted by the server **13** and the plurality of stations **4** (12 stations in the present embodiment) connected to the server **13**, wherein the roulette device **3** and the electric lighting display portion **5** are connected to the server **13**. Further, the internal structures of the roulette device **3** and the stations **4** will be described in detail later.

The server **13** includes a server-controlling portion **80** comprised of a server-controlling CPU **81** which controls the entire server **13**, a ROM **82**, and a RAM **83**. The server-controlling portion **80** corresponds to a controller in the present invention. Further, the server-controlling CPU **81** includes a timer **84**, a liquid crystal display **32** connected through a liquid crystal driving circuit **85**, and a key board **33**.

The server-controlling CPU **81** conducts various types of processing, based on input signals supplied from the respective stations **4** and data and programs stored in the ROM **82** and the RAM **83**. Then, based on the results thereof, the server-controlling CPU **81** transmits command signals to the stations **4**, to control the respective stations **4** in an initiative manner. Particularly, the server-controlling CPU **81** transmits control signals to the roulette device **3** to control the launching of the ball **27** and the rotation of the roulette wheel **22**.

The ROM **82**, which is constituted by, for example, a semiconductor memory and the like, stores programs for realizing basic functions of the roulette gaming machine **1**, programs for setting and managing annunciation of maintenance times and conditions to be announced, payout value ratios for roulette games (the numbers of credits to be paid out for winning per single chip), programs for controlling the respective stations **4** in an initiative manner and the like.

On the other hand, the RAM **83** temporarily stores information on betted chips supplied from the respective stations **4**, winning numbers of the roulette device **3** determined by a sensor, JP values accumulated until the present time, data about the results of processing executed by the server-controlling CPU **81** and the like.

Further, the timer **84** for use in time measurement is connected to the server-controlling CPU **81**.

Time information from the timer **84** is transmitted to the server-controlling CPU **81**, which controls rotation operation on the roulette wheel **22** and throwing in of the ball **27**, based on the time information from the timer **84**, as will be described later.

Further, the electric lighting display portion **5** (see FIG. **4**) is connected to the server-controlling CPU **81**. Further, the server-controlling CPU **81** controls light emission from LEDs and the like for performing illumination effects and also for displaying predetermined characters and the like to the electric lighting display portion **5**. Further, the server-controlling CPU **81** especially causes the JP-value display portion **15** in the electric lighting display portion **5** to display the value of a JP (JP "MEGA" in the present embodiment) which has been accumulated until the present time.

FIG. **7** is a schematic view illustrating the storage area of the ROM in the roulette gaming machine according to the present embodiment.

As illustrated in FIG. **7**, the ROM **82** is provided with a payout value credit storage area **82**A storing payout value ratios relating to games and a JP predetermined value storage area **82**B storing the predetermined values for JPs illustrated in FIG. **3**. Further, as payout value ratios for the respective BET areas **72** in the BET screen **61** stored in the payout value credit storage area **82**A, there have been stored, in advance, predetermined ratios "×2" to "×36", depending on the types of betting methods (such as "Straight BET", "Corner BET", "Split BET" and the like).

FIG. **8** is a schematic view illustrating the storage area of the RAM in the roulette gaming machine according to the present embodiment.

As illustrated in FIG. **8**, the RAM **83** is provided with a BET information storage area **83**A which stores information on betting by players currently playing games, a winning-number storage area **83**B which stores a winning number of the roulette device **3** determined by the ball sensor **105**, a "MINI" JP cumulative storage area **83**C which stores the number of credits cumulatively accumulated for the JP "MINI", a "MAJOR" JP cumulative storage area **83**D which stores the number of credits cumulatively accumulated for the JP "MAJOR", and a "MEGA" JP cumulative storage area **83**E which stores the number of credits cumulatively accumulated for the JP "MEGA". Further, more specifically, the betting information is information on betting performed through the stations **4**, such as BET areas **72** (see FIG. **5**) specified on the BET screen **61**, the numbers of betted chips (the numbers of BETs), and the types of betting methods.

FIG. **9** is a block diagram illustrating the internal structure of the roulette device according to the present embodiment.

As illustrated in FIG. **9**, the roulette device **3** includes a control portion **109**, the pocket position detection circuit **107**, the ball throwing device **104**, the ball sensor **105**, the wheel driving motor **106** and a ball collecting device **108**.

The control portion **109** includes a CPU **101**, a ROM **102** and a RAM **103**. The CPU **101** controls the launching of the ball **27** and the rotation of the roulette wheel **22**, based on control signals supplied from the server **13** and data and programs stored in the ROM **102** and the RAM **103**.

FIG. **10** is a schematic view illustrating the storage area of the ROM in the roulette device according to the present embodiment.

As illustrated in FIG. **10**, the ROM **102** is provided with a control data storage area **102**A which stores control data having the structure described with reference to FIG. **2**.

The pocket position detection circuit **107** includes a proximity sensor and detects the position of the roulette wheel **22** based on the presence or absence of detections of a metal plate mounted to the roulette wheel **22**.

The ball throwing device **104** is a device for throwing the ball **27** onto the roulette wheel **22** through the ball throwing port **36** (see FIG. **1**). The ball throwing device **104** throws the ball **27** at an initial speed defined by the control data. Further, the ball throwing device **104** throws the ball **27** at timing based on a launching delay time defined by the control data. Namely, the ball throwing device **104** throws the ball **27** after the elapse of the launching delay time since the pocket position detection circuit **107** detected a predetermined number pocket **23** (for example, "00") passing a predetermined position (for example, the position at the front of the ball throwing port **36**).

The ball sensor **105** is a device for determining which number pocket **23** the ball **27** has been housed in.

The wheel driving motor **106** is for rotating the roulette wheel **22** and stops the driving of the motor after the elapse of a motor driving time defied by the control data since the start of the driving thereof.

The ball collecting device **108** is a device for collecting the ball **27** thrown onto the roulette wheel **22** after the end of games.

FIG. **11** is a block diagram illustrating the internal structure of a station according to the present embodiment. Further, the twelve installed stations **4** have basically the same structure and, therefore, a single station **4** will be exemplarily described, hereinafter.

As illustrated in FIG. **11**, the station **4** includes a station control portion **90** constituted by a station-controlling CPU **91**, a ROM **92** and a RAM **93**. The ROM **92** is constituted by, for example, a semiconductor memory or the like and stores programs for realizing basic functions of the station **4**, other programs of various types necessary for controlling the station **4**, data tables and the like. Further, the RAM **93** is a memory for temporarily storing various types of data resulted from calculations by the station-controlling CPU **91**, the number of credits currently possessed by the player (accumulated in the station **4**), the condition of betting of chips by the player, and the like.

Further, a BET confirmation button **47**, a payback button **48** and a help button **49**, which are provided in the control portion **7** (see FIG. **4**), are connected to the station-controlling CPU **91**.

The BET confirmation button **47** is to be pushed for confirming betting after betting operations through the image display device **8**.

The payback button **48** is to be generally pushed at the end of games. When the payback button **48** is pushed, the number of medals corresponding to the credits acquired in games and the like and currently possessed by the player (a single medal for a single credit, in general) are paid out from the medal payout port **9**.

The help button **49** is to be pushed when the game operating method or the like is unknown. Immediately after the help button **49** is pushed, a help screen describing information on various types of operations is displayed to the image display device **8**.

The station-controlling CPU **91**, based on operation signals issued by pushing respective buttons and the like, controls the station **4** for conducting various types of operations corresponding to the operation signals. More specifically, the station-controlling CPU **91** conducts various types of processing, based on input signals that the control portion **7** supplies thereto on receiving inputs of operations by the player, and data and programs stored in the ROM **92** and the RAM **93**. Then, the station-controlling CPU **91** transmits the result of such processing to the server-controlling CPU **81**.

Further, the station-controlling CPU **91**, on receiving command signals from the server-controlling CPU **81**, controls its peripheral devices constituting the station **4** for processing games in the station **4**. Further, the station-controlling CPU **91** conducts various types of processing, based on input signals that the control portion **7** supplies thereto on receiving inputs of operations by the player, and data and programs stored in the ROM **92** and the RAM **93**, and then controls its peripheral devices constituting the station **4** for processing games in the station **4**, based on the result of such processing, depending on the contents of processing.

Further, a hopper **94** is connected to the station-controlling CPU **91**. The hopper **94** pays out predetermined numbers of medals from the medal payout port **9** (see FIG. **4**), according to command signals from the station-controlling CPU **91**.

Further, the image display device **8** is connected to the station-controlling CPU **91** through a liquid crystal driving circuit **95**. The liquid crystal driving circuit **95** includes a program ROM, an image ROM, an image-controlling CPU, a work RAM, a VDP (Video Display Processor) and a video RAM. The program ROM stores image-controlling programs relating to the display within the image display device **8**, and various types of selection tables. The image ROM stores, for example, dot data for use in forming images to be displayed to the image display device **8**. The image-controlling CPU is for determining images to be displayed to the image display device **8**, out of the dot data pre-stored in the image ROM, according to the image-controlling programs pre-stored in the program ROM, based on parameters set in the station-controlling CPU **91**. The work RAM is formed as a temporal storage device for use in executing the image-controlling programs with the image-controlling CPU. The VDP creates images corresponding to the content of display determined by the image-controlling CPU and outputs them to the image display device **8**. Further, the video RAM is formed as a temporal storage device for use in creating images with the VDP.

Further, the touch panel **50** is provided in the front surface of the image display device **8** as previously described, and information on operations on the touch panel **50** is transmitted to the station-controlling CPU **91**. On the touch panel **50**, the player performs operations for betting chips through the BET screen **61**. More specifically, the touch panel **50** is operated in selecting BET areas **72**, operating the unit BET buttons **66** and the like, and information on such operations is transmitted to the station-controlling CPU **91**. Then, based on such information, information on the betting by the current player (i.e., information on the BET areas specified on the BET screen **61** and the number of chips betted thereon) is stored in the RAM **93** anytime. Further, the betting information is transmitted to the server-controlling CPU **81** and is stored in the BET information storage area of the RAM **83**.

Further, a sound output circuit **96** and a speaker **10** are connected to the station-controlling CPU **91**, wherein the speaker **10** generates various types of effect sounds when various types of effects are conducted based on output signals from the sound output circuit **96**.

Further, a medal sensor **97** is connected to the station-controlling CPU **91**. The medal sensor **97** detects medals inserted from the medal insertion port **6** (see FIG. **4**), calculates the value of the inserted medals and transmits the result to the station-controlling CPU **91**. The station-controlling CPU **91**, based on the transmitted signals, increases the number of credits possessed by the player which is stored in the RAM **93**.

The WIN lamp **11** is connected to the station-controlling, CPU **91**. The station-controlling CPU **91** lights the WIN lamp **11** in predetermined colors, in the event of the occurrence of winning relating to chips betted on the BET screen **61** or the winning of JP.

Hereinafter, based on FIG. **12** and FIG. **13**, there will be described server-side game processing which is conducted by the server-controlling CPU **81** included in the roulette gaming machine **1** according to the present embodiment, and station-side game processing which is conducted by the station-controlling CPU **91**. FIG. **12** and FIG. **13** are flow charts illustrating game processing in the roulette gaming machine according to the present embodiment.

First, the station-side game processing will be described, based on FIG. **12** and FIG. **13**.

At first, in step S**11**, the station-controlling CPU **91** determines whether or not medals or coins have been inserted by the player, based on detection signals from the medal sensor **97**. If no medal or coin has been inserted (step S**11**: NO), the station-controlling CPU **91** waits for medals or coins to be

inserted. On the other hand, if medals or coins have been inserted (step S**11**: YES), the processing proceeds to step S**12**.

In step S**12**, the station-controlling CPU **91** stores, in the RAM **93**, an amount of credit data corresponding to the number of inserted medals or coins. Next, in step S**13**, the station-controlling CPU **91** transmits, to the server **13**, a medal detection signal indicative of the presence of insertion of medals or coins.

Next, in step S**14**, the station-controlling CPU **91** causes the image display device **8** in the station **4** to display the BET screen **61** illustrated in FIG. **5**.

Next, in step S**15**, the station-controlling CPU **91** starts measuring a betting time period during which the player can bet chips.

Then, the player taking part in the game can bet his or her own chips on a BET area **72** relating to a winning number that he or she predicts, by operating the touch panel **50**, during the betting time period during which betting can be received (see FIG. **5**). Betting methods using the BET screen **61** have been already described in detail, and description thereof is not repeated.

Further, the player is allowed to take part in a game halfway therethrough after the start of the betting time period, and up to 12 players can play games with the roulette gaming machine **1** according to the present embodiment. Further, in cases where a current game is played subsequently to the previous game, the reception of betting operations is started immediately after the end of the previous game.

Next, in step S**16**, on receiving abetting-time-period end signal indicative of the end of the betting time period from the server-controlling CPU **81**, the station-controlling CPU **91** causes the image display device **8** in the station **4** to display an image indicative of the end of the betting time period, and ends the reception of betting operations through the touch panel **50** (step S**17**). Thereafter, the station-controlling CPU **91** transmits information on the betting that the player performed at the station **4** (the specified BET area **72**, the number of chips betted on the specified BET area **72** [i.e., the number of BETs]) (step S**18**).

Next, in step S**19**, the station-controlling CPU **91** receives, from the server **13**, the result of JP-bonus-game determination processing conducted by the server-controlling CPU **81**, which will be described later. The result of JP-bonus-game determination includes the result of determination as to whether or not a predetermined JP bonus game should be generated at each station **4**, the result of determination as to which station **4** out of the 12 stations **4** should win a JP (or as to whether all the stations **4** should not win the JP) if a JP bonus game should be generated, the result of determination as to which JP ("MEGA", "MAJOR" or "MINI") should be generated if a JP should be generated, and the like.

Next, in step S**20** in FIG. **13**, the station-controlling CPU **91** determines whether or not a JP bonus game should be generated, based on the result of the JP-bonus-game determination processing which was received in step S**19**. If the station-controlling CPU **91** determines that a JP bonus game should be generated at this station **4**, the station-controlling CPU **91** executes a predetermined selectable JP bonus game relating to acquisition of JPs and causes the image display device **8** to display the result of the game (i.e., whether or not a JP was acquired), based on the result of determination received in step S**19**.

If the station-controlling CPU **91** determines in step S**20** that no bonus game should be generated at this station **4**, or after the processing in step S**21**, the station-controlling CPU **91** receives the result of credit payout transmitted from the server-controlling CPU **81** (step S**22**). The result of credit payout is constituted by the result of payout in games and the result of JP payout in JP bonus games.

Next, in step S**23**, the station-controlling CPU **91** pays out credits, based on the result of payout received in step S**22**. More specifically, the station-controlling CPU **91** stores, in the RAM **93**, an amount of credit data corresponding to the payout value of the game and, also, stores therein, an amount of credit data corresponding to the JP payout value accumulated until the present time in cases where a JP bonus game was generated and the present station **4** won a JP. Then, if the payback button **48** is pushed, a number of medals corresponding to the number of credits currently stored in the RAM **93** (a single medal corresponds to a single credit, in general) are paid out from the medal payout port **9**.

If a game is continuously played at one of the stations **4** thereafter, the processing returns to step S**14**, then starts the betting time period again and enters the next game.

On the other hand, if the game is ended at all the stations **4**, the game processing ends.

Next, based on FIG. **12** and FIG. **13**, the server-side game processing will be described.

At first, in step S**101**, the server-controlling CPU **81** determines whether or not medals or coins have been inserted by the player, on receiving medal detection signals transmitted from the station-controlling CPU **91**. In the roulette gaming machine **1** according to the present embodiment, if medals or coins are inserted at one of the stations **4**, the station-controlling CPU **91** in the station **4** at which the medals or coins have been inserted transmits a medal detection signal to the server-controlling CPU **81**.

Next, the server-controlling CPU **81** starts measurement of a betting time period, at the time point when the player who first takes part in the game inserts medals or coins (step S**102**). The betting time period is a time period during which players can perform inputs for betting. Players taking part in the game can bet their own chips on BET areas **72** relating to winning numbers they predict, by operating the touch panel **50** during the betting time period.

Next, in step S**103**, the server-controlling CPU **81** determines whether or not the remaining betting time period has reached 5 seconds. Further, the remaining betting time period is displayed to the BET time display portion **69** (see FIG. **5**). If it is determined that the remaining betting time period has not reached 5 seconds, the processing is returned to step S**103**. On the other hand, if it is determined that the remaining betting time period has reached 5 seconds, the processing shifts to step S**104**.

In step S**104**, the server-controlling CPU **81** transmits a control signal for starting an operation of the roulette device **3**, to the CPU **101** in the roulette device **3**. The CPU **101**, on receiving the control signal, refers to the control data stored in the ROM **102** and controls operations as follows.

First, the CPU **101** drives the wheel driving motor **106** to rotate the roulette wheel **22**, only during a motor driving time defined by the control data.

Then, after the elapse of a predetermined time period (for example, 20 seconds) since the start of the rotation of the roulette wheel **22**, the CPU **101** throws the ball **27** after the elapse of a launching delay time since it detected a detection signal from the pocket position detection circuit **107**. At this time, the ball is thrown at an initial speed defined by the control data.

As control data to be referred by the CPU **101**, single control data has been pre-set as a reference target, at the time of activation of the roulette gaming machine **1**. Further, when

Light & Wonder v. Evolution
Light & Wonder Exhibit 1080

another control data is set as the reference target, this another control data is referred to as the reference target by the CPU **101**.

Next, in step S**105**, the server-controlling CPU **81** determines whether or not the betting time period has ended. If the server-controlling CPU **81** determines that the betting time period has not ended, it waits for the end of the betting time period.

On the other hand, if the server-controlling CPU **81** determines that the betting time period has ended, the server-controlling CPU **81** transmits a betting-time-period end signal indicative of the end of the betting time period, to the station-controlling CPU **91** (step S**106**).

Next, in step S**107**, the server-controlling CPU **81** receives, from the station-controlling CPU **91**, information on the betting that the player performed at each station **4** (i.e., information on the specified BET area **72**, the number of chips betted on the specified BET area **72** [i.e., the number of BETs), and the betting method) and stores it in the BET information storage area **83**A in the RAM **83**.

Next, in step S**108**, the server-controlling CPU **81** cumulatively adds a number of credits corresponding to 0.30% of the sum of the credits betted at all the stations **4**, which were received in step S**107**, to the JP value stored in the "MINI" JP cumulative storage area **83**C in the RAM **83**. Further, the server-controlling CPU **81** cumulatively adds a number of credits corresponding to 0.20% of the sum of the credits to the JP value stored in the "MAJOR" JP cumulative storage area **83**D in the RAM **83**. Further, the server-controlling CPU **81** cumulatively adds a number of credits corresponding to 0.15% of the sum of the credits to the JP value stored in the "MEGA" JP cumulative storage area **83**E in the RAM **83**. Further, based on these JP values, the server-controlling CPU **81** updates the displays to the JP-value display portion **15**, the MEGA display portion **73**, the MAJOR display portion **74** and the MINI display portion **75**.

Next, in step S**109**, the server-controlling. CPU **81** executes a control data determining processing. This processing will be described later in detail by using FIG. **14**.

Next, in step S**110**, the server-controlling CPU **81** conducts JP-bonus-game determination processing. In this processing, using random numbers sampled by a sampling circuit and the like, the server-controlling CPU **81** determines whether or not a JP bonus game should be generated at each station **4**, determines which station **4** out of the 12 stations **4** should win a JP (or whether all the stations **4** should not win a JP) if a JP bonus game should be generated, and also determines which JP ("MEGA", "MAJOR" or "MINI") should occur if a JP should be generated.

Next, at step S**111**, the server-controlling CPU **81** transmits the result of JP bonus game determination to each station **4**, based on the processing in step S**110**.

Next, in step S**112** in FIG. **13**, the server-controlling CPU **81** determines whether or not a JP is won, based on the result in step **110**. If the server-controlling CPU **81** determines that a JP has not been won, the processing shifts to step S**114**.

On the other hand, if the server-controlling CPU **81** determines that a JP has been won, in step S**113**, the predetermined value of the JP that has been won (hereinafter, also referred to as "winning JP") is returned to J**1** (see FIG. **3**) as the initial value.

Next, in step S**114**, the server-controlling CPU **81** transmits a control signal to the roulette device **3** to drive the ball sensor **105**, thereby determining which number is associated with the number pocket **23** in which the ball **27** has been housed.

Next, the server-controlling CPU **81** determines whether or not winning relating to the chips betted at each station **4** has occurred, from the betting information on each station **4** which was received in step S**107** and the type of the pocket determined in step S**114** (step S**115**).

Next, in step S**116**, the server-controlling CPU **81** executes a payout value calculation processing. In the payout value calculation processing, the server-controlling CPU **81** recognizes the winning chips betted on the winning number at each station **4** and calculates the sum of the payout value of credits to be paid out for each station **4**, using the payout value ratios for the respective BET areas **72** (i.e., the numbers of credits to be paid out for a single chip [1 BET]) stored in the payout value credit storage area **82**A in the ROM **82**.

Next, in step S**117**, the server-controlling CPU **81** conducts processing for transmitting the result of credit payout in games based on the payout value calculation processing in step S**113** and the result of JP payout based on the JP-bonus-game determination processing in step S**110**. More specifically, the server-controlling CPU **81** issues credit data corresponding to the amount of payout values resulted from games to the station-controlling CPU **91** in the station **4** which won the games. Further, when a JP is won, the server-controlling CPU **81** further issues credit data corresponding to the JP value accumulated until the present time.

Next, in step S**118**, the server-controlling CPU **81** transmits a control signal to the roulette device **3** to drive the ball collecting device **108** provided under the roulette wheel **22** for collecting the ball **27** thrown onto the roulette wheel **22**. The collected ball **27** will be thrown onto the roulette wheel **22** in the roulette device **3** again in subsequent games.

After the processing in step S**118** has been executed, the present subroutine is terminated.

FIG. **14** is a flow chart illustrating a subroutine of a control data determination processing which is executed in step S**109** in FIG. **12**.

In step S**201**, the server-controlling CPU **81** determines whether or not the JP for "MINI" is equal to or more than the predetermined value. If the server-controlling CPU **81** determines that the JP for "MINI" is equal to or more than the predetermined value, it determines a new predetermined value of the JP for "MINI" (step S**202**). Since this determination method has already been described, its description will not be repeated.

On the other hand, if the server-controlling CPU **81** determines that the JP for "MINI" is less than the predetermined value, it determines, in step S**203**, whether or not the JP for "MAJOR" is equal to or more than the predetermined value. If the server-controlling CPU **81** determines that the JP for "MAJOR" is equal to or more than the predetermined value, it determines a new predetermined value of the JP for "MAJOR" (step S**204**).

On the other hand, if the server-controlling CPU **81** determines that the JP for "MAJOR" is less than the predetermined value, it determines, in step S**205**, whether or not the JP for "MEGA" is equal to or more than the predetermined value. If the server-controlling CPU **81** determines that the JP for "MEGA" is equal to or more than the predetermined value, it determines a new predetermined value of the JP for "MEGA" (step S**206**). On the other hand, if the server-controlling CPU **81** determines that the JP for "MEGA" is less than the predetermined value, the present subroutine is terminated.

In the present embodiment, it is determined whether or not the JP for "MAJOR" is equal to or more than the predetermined value when the JP for "MINI" is less than the predetermined value. Further, it is determined whether or not the JP for "MEGA" is equal to or more than the predetermined value

when the JP for "MAJOR" is less than the predetermined value. However, in the present invention, the order of determining whether or not the JP is equal to or more than the predetermined value is not limited to this example. For example, it may be determined in order of "MEGA", "MAJOR", and then "MINI".

After executing the processing in step S**202**, step S**204**, or step S**206**, the server-controlling CPU **81** determines control data in step S**207**. Specifically, the server-controlling CPU **81** instructs the CPU **101** of the roulette device **3** to switch the control data. Upon receipt of this instruction, the CPU **101** performs random number sampling, and based on the acquired random number, the CPU **101** determines control data as the reference target, which is different from the control data currently set as the reference target, out of the plurality of control data stored in the ROM **102**.

After the processing in S**207** has been executed, the present subroutine is terminated.

As described above, the roulette gaming machine **1** according to the present embodiment includes the roulette wheel **22** including the plurality of number pockets **23** which have been associated with respective numbers in advance. Further, the roulette gaming machine **1** includes the ROM **102** (memory) which stores a plurality of control data for controlling the roulette gaming machine **1** so as to provide a higher weight on a probability that the ball **27** is housed in any of the number pockets **23**. Further, the roulette gaming machine **1** includes a server-controlling portion **80** (controller), which controls rotation of the roulette wheel **22** and launching of the ball **27** by referring to a single control data out of the plurality of control data. Also, the server-controlling portion **80** cumulatively accumulates part of betted currency value for a plurality of types of JPs. Moreover, the server-controlling portion **80** selects another control data different from the single control data, out of the plurality of control data, and sets the selected control data as a reference target, when any of the JPs reaches a predetermined value.

In the present embodiment, there are three types of JPs of "MINI", "MAJOR", and "MEGA". However, in the present invention, the number of types of JPs is not limited to this example and may be two types or less, or may be four types or more.

Further, in the present embodiment, the control data is switched when at least a single JP among the three types of JPs reaches a predetermined value. However, in the present invention, it is not limited to this example. For example, a predetermined value may be set only for the JP for "MINI", and the control data may be switched when the JP for "MINI" reaches the predetermined value.

Although the present invention has been described with reference to embodiments thereof, these embodiments merely illustrate concrete examples, not restrict the present invention. The concrete structures of respective means and the like can be designed and changed as required. Furthermore, there have been merely described most preferable effects of the present invention, as the effects of the present invention, in the embodiments of the present invention. The effects of the present invention are not limited to those described in the embodiments of the present invention.

Further, in the aforementioned detailed description, characteristic portions have been mainly described, for ease of understanding the present invention. The present invention is not limited to the embodiments described in the aforementioned detailed description, but can be also applied to other embodiments over a wider range of applications. Further, the terms and phrases used in the present specification have been used for clearly describing the present invention, not for limiting the interpretation of the present invention. Further, those skilled in the art will easily conceive other structures, systems, methods and the like which are included in the concept of the present invention, from the concept of the present invention described in the present specification. Accordingly, the description of the claims is intended to include equivalent structures that fall within the technical scope of the invention. Further, the abstract aims at enabling engineers and the like who belong to the present technical field but are not familiar with the patent office and public institutions, the patent, law terms and technical terms to immediately understand the technical content and the essence of the present application through brief studies. Accordingly, the abstract is not intended to restrict the scope of the invention which should be evaluated from the description of the claims. It is desirable that literatures and the like which have been already disclosed are sufficiently studied and understood, in order to sufficiently understand the objects of the present invention and the specific effects of the present invention.

In the aforementioned detailed description, there have been described processes to be executed by computers. The aforementioned description and expressions have been described for the sake of enabling those skilled in the art to understand the present invention most effectively. In the present specification, each step for deriving a single result should be understood to be self-consistent processing. Further, each step includes transmission, reception, recording and the like of electric or magnetic signals. Although, in the processing at each step, such signals have been expressed as bits, values, symbols, characters, terms, numerical characters and the like, it should be noticed that they have been merely used for convenience of description. Further, although the processing at each step was described using expressions common to human behaviors in some cases, the processes described in the present specification are to be executed by various types of devices, in principle. Further, other structures required for conducting each step will be apparent from the aforementioned description.

What is claimed as new and desired to be secured by Letters Patent of the United States is:

1. A gaming apparatus comprising:

a roulette wheel including a plurality of pockets associated with respective numbers in advance;

a memory for storing a plurality of control data for controlling the gaming apparatus so as to provide different weights on probabilities that a ball is housed in each of said pockets; and

a controller,

said controller controlling rotation of said roulette wheel and launching of said ball by referring to a single control data out of said control data,

cumulatively accumulating part of betted currency value as a jackpot, and

selecting another control data different from said single control data, out of said plurality of control data, and setting the selected control data as a reference target, when the accumulated jackpot reaches a predetermined amount.

2. A gaming apparatus comprising:

a roulette wheel including a plurality of pockets associated with respective numbers in advance;

a memory for storing a plurality of control data for controlling the gaming apparatus so as to provide different weights on probabilities that a ball is housed in each of said pockets; and

a controller,

said controller controlling rotation of said roulette wheel and launching of said ball by referring to a single control data out of said control data,

cumulatively accumulating part of betted currency value for a plurality of types of jackpots, and

selecting another control data different from said single control data, out of said plurality of control data, and setting the selected control data as a reference target, when any of the jackpots reaches a predetermined amount.

3. A gaming apparatus comprising:

a roulette wheel including a plurality of pockets associated with respective numbers in advance;

a memory for storing a plurality of control data for controlling the gaming apparatus so as to provide a relatively high weight on a probability that a ball is housed in any of the pockets constituting a single group, said single group belonging to a plurality of groups each of which consists of a predetermined number of said plurality of pockets, and the plurality of control data associated with each of said groups; and

a controller,

said controller controlling rotation of said roulette wheel and launching of said ball by referring to a single control data out of said control data,

cumulatively accumulating part of betted currency value as a jackpot, and

selecting another control data different from said single control data, out of said plurality of control data, and setting the selected control data as a reference target, when the accumulated jackpot reaches a predetermined amount.

4. A playing method of a gaming apparatus comprising the steps of:

with a controller:

controlling rotation of a roulette wheel and launching of a ball by referring to a single control data stored in a memory, the single control data selected out of a plurality of control data stored in the memory for controlling the gaming apparatus so as to provide different weights on probabilities that said ball is housed in any of a plurality of pockets included in said roulette wheel and associated with respective numbers in advance;

cumulatively accumulating part of betted currency value as a jackpot, and

selecting another control data stored in the memory different from said single control data stored in the memory, out of said plurality of control data stored in the memory, and setting the selected control data stored in the memory as a reference target, when the accumulated jackpot reaches a predetermined amount.

5. A playing method of a gaming apparatus comprising the steps of:

with a controller:

controlling rotation of a roulette wheel and launching of a ball by referring to a single control data stored in a memory, the single control data selected out of a plurality of control data stored in the memory for controlling the gaming apparatus so as to provide different weights on probabilities that said ball is housed in any of a plurality of pockets included in said roulette wheel and associated with respective numbers in advance;

cumulatively accumulating part of betted currency value for a plurality of types of jackpots, and

selecting another control data stored in the memory different from said single control data, out of said plurality of control data stored in the memory, and setting the selected control data stored in the memory as a reference target, when any of the jackpots reaches a predetermined amount.

6. A playing method of a gaming apparatus comprising the steps of:

with a controller:

controlling rotation of a roulette wheel and launching of a ball by referring to a single control data stored in a memory, the single control data selected out of a plurality of control data stored in the memory for controlling the gaming apparatus so as to provide a relatively high weight on a probability that said ball is housed in any of the pockets constituting a single group, said single group belonging to a plurality of groups each of which consists of a predetermined number of pockets out of a plurality of pockets being included in said roulette wheel and being associated with respective numbers in advance;

cumulatively accumulating part of betted currency value as a jackpot, and

selecting another control data stored in the memory different from said single control data, out of said plurality of control data stored in the memory, and setting the selected control data stored in the memory as a reference target, when the accumulated jackpot reaches a predetermined amount.

* * * * *