UNITED STATES PATENT AND TRADEMARK OFFICE

BEFORE THE PATENT TRIAL AND APPEAL BOARD

LIGHT & WONDER, INC.,
Petitioner,

v.

EVOLUTION MALTA LIMITED,
Patent Owner.

IPR2025-01073

PATENT OWNER EVOLUTION MALTA LIMITED'S PRELIMINARY RESPONSE

Table of Contents

I. Introduction 1

II. Factual Background 5

A. Evolution 5

B. Standard Roulette 6

C. Evolution's Lightning Roulette Product that Is Covered by the '024, '014, and '371 Patents 7

D. Evolution's Partnership with Light and Wonder 12

III. Person of Ordinary Skill in the Art 13

IV. Claim Construction 14

A. Payout 15

B. "A Spin of the Roulette Wheel" 18

V. Argument 22

A. L&W Has Failed to Show that Kido Anticipates or Renders Obvious Any Claim 22

1. Summary of Kido 23

2. Kido Does Not Disclose "Determine a First Payout for the First Position and a Second Payout for the Second Position For the Spin of the Roulette Wheel, Wherein the First Payout Is Higher Than the Second Payout" 24

a) Kido Does Not "Determine a First Payout for the First Single Position…" That Meets the Claims 24

b) Kido Does Not Disclose a First Payout "For the Spin of the Roulette Wheel" 29

c) Kido Does Not "Determine… a Second Payout for the Second Position For the Spin of the Roulette Wheel" 31

3. L&W's Anticipation Argument Is Improper 32

B. L&W Has Failed to Show that Baron Anticipates or Renders Obvious Any Claim 35

1. Summary of Baron 35

2. Baron's Game Requires Multiple Spins of Roulette Wheels and Does Not Disclose the "for a spin of the roulette wheel" Claim Elements 37

a) L&W Failed to Show that Baron Discloses "Randomly Select a First Selected Position on the Roulette Wheel For the Spin of the Roulette Wheel" and "Determine that the Ball has Fallen in the First Position For the Spin of the Roulette Wheel" 37

b) Baron Does Not Disclose "Determine a First Payout for First Position and a Second Payout for the Second Position for the Spin of the Roulette Wheel, Wherein the First Payout Is Higher Than the Second Payout" 42

3. L&W's Anticipation Argument Is Improper 43

C. Substantial Objective Indicia Show the Claims Are Non-Obvious 44

1. Industry Praise: Lightning Roulette Has Received Extensive Industry Praise 45

2. Copying: L&W Copied Lightning Roulette 47

3. Commercial Success and Licensing: L&W Recognized Lightning Roulette's Success and Licensed the '024 Patent 48

4. Lightning Roulette Has a Nexus with the Claims 49

VI. Conclusion 58

TABLE OF AUTHORITIES

Cases **Page(s)**

Ancora Techs., Inc. v. Roku, Inc.,
140 F.4th 1351 (Fed. Cir. 2025) 49

Fox Factory, Inc. v. SRAM, LLC,
944 F.3d 1366 (Fed. Cir. 2019) 57

Henny Penny Corp. v. Frymaster LLC,
938 F.3d 1324 (Fed. Cir. 2019) 49

Liqwd, Inc. v. L'Oreal USA, Inc.,
941 F.3d 1133 (Fed. Cir. 2019) 44

Microsoft Corp. v. Biscotti, Inc.,
878 F.3d 1052 (Fed. Cir. 2017) 33

Net MoneyIN, Inc. v. VeriSign, Inc.,
545 F.3d 1359 (Fed. Cir. 2008) 32

Omron Oilfield & Marine Inc. v. MD/TOTCO,
IPR2013-00265 (Oct. 31, 2013) 45

Phillips v. AWH Corp.,
415 F.3d 1303 (Fed. Cir. 2005) 14

Stratoflex, Inc. v. Aeroquip Corp.,
713 F.2d 1530 (Fed. Cir. 1983) 5

Stryker v. KFx Med.,
IPR2019-00817, Paper 10 (Sept. 16, 2019).....45

Vivid Techs., Inc. v. Am. Sci. & Eng'g, Inc.,
200 F.3d 795 (Fed. Cir. 1999) 14

WBIP, LLC v. Kohler Co.,
829 F.3d 1317 (Fed. Cir. 2016) 58

Other Authorities

37 C.F.R. 42.104(b)(4).....40

37 C.F.R. § 42.100 14

N.J.A.C. 13:69F-5.2 18

Exhibit List

Exhibit#	Reference Name
2001	2024 Evolution Annual Report
2002	2021 Evolution Annual Report
2003	Evolution Interim Report, January to June 2025
2004	Evolution Press Release: Five wins for Evolution Group at EGR B2B Awards including Live Casino Supplier of the Year for 12th year running (July 8, 2021) https://www.evolution.com/news/five-wins-for-evolution-group-at-egr-b2b-awards-including-live-casino-supplier-of-the-year-for-12th-year-running/
2005	Evolution's Lightning Roulette Voted GOTY At EGR (Oct. 30, 1018) https://lcb.org/news/evolution-s-lightning-roulette-voted-goty-at-egr
2006	Global Gaming Awards, Vegas 2018 Winners https://www.globalgamingawards.com/vegas/2018/
2007	Global Gaming Awards Las Vegas 2018 winners revealed (Oct. 8, 2018) https://www.gamblinginsider.com/news/6039/global-gaming-awards-las-vegas-2018-winners-revealed
2008	Evolution Press Release: Evolution and Scientific Games strike land-based Lightning Roulette deal (May 25, 2021) https://www.evolution.com/news/evolution-and-scientific-games-strike-land-based-lightning-roulette-deal/
2009	2022 American Gambling Awards Nominations https://www.gambling.com/us/awards/winners/2022
2010	Lightning Roulette U.S. from Evolution is the American Gambling Awards Gaming Product of the Year (Nov. 18, 2022) https://www.businesswire.com/news/home/20221118005067/en/Lightning-Roulette-U.S.-from-Evolution-is-the-American-Gambling-Awards-Gaming-Product-of-the-Year
2011	Lightning Roulette Product Page https://games.evolution.com/live-casino/live-roulette/lightning-roulette/
2012	Press Release re: FanDuel Extension (Nov. 14, 2024)

Exhibit#	Reference Name
2013	L&W's Responses and Objections to Evolution's First Set of Interrogatories (Oct. 7, 2024) (excerpts)
2014	March 29, 2021 License Agreement between Evolution and L&W
2015	Evolution's February 28, 2022 Letter to L&W
2016	L&W's March 17, 2022 Letter to Evolution
2017	Dkt. No. 125, Second Amended Complaint in *Evolution Malta Limited v. Light & Wonder, Inc.*, Case No. 2:24-cv-00993-CDS-EJK (D. Nev.)
2018	L&W's Invalidity Contentions (Nov. 2024)
2019	L&W's Supplemental Invalidity Contentions (Aug. 2025)
2020	Dkt. No. 67, Order Denying Motion to Stay Discovery (Nov. 7, 2024)
2021	Dkt. No. 84, Minutes of Proceedings
2022	Dkt. No. 122, Order Denying Joint Stipulation to Stay Discovery (June 25, 2025)
2023	Dkt. No. 151, Order Denying Stipulation to Extend Discovery (July 28, 2025)
2024	Dkt. No. 156, Defendants' Motion to Dismiss Plaintiffs' Second Amended Complaint (Aug. 9, 2025)
2025	Dkt. No. 157, Order Granting Joint Stipulation to Stay Discovery (Aug. 11, 2025)
2026	L&W's July 22, 2025 Letter to Evolution
2027 [NEW]	Lightning Roulette Fact Sheet (June 2020)
2028 [NEW]	C. Barboianu, Roulette Odds and Profits: The Mathematics of Complex Bets (2007) (excerpt)
2029 [NEW]	S. Bourie, *Understanding Roulette Odds and Payouts*, American Casino Guide Book https://www.americancasinoguidebook.com/roulette/understanding-roulette-odds-and-payouts.html
2030 [NEW]	L. Hoofe, *Roulette Odds and Payouts*, Gambling Zone https://www.gamblingzone.com/uk/roulette/odds/
2031 [NEW]	Bets, Odds, and Payouts: A list of all the bets on the roulette table, RouletteStar*

Exhibit#	Reference Name
	https://www.roulettestar.com/guide/bets-odds/
2032 [NEW]	A guide to understanding roulette odds, Casino.org https://www.casino.org/roulette/odds/
2033 [NEW]	G. Pelayes, *Roulette Table Payout: Maximizing Your Potential Wins*, Vegas Aces (Aug. 1, 2024) https://www.vegas-aces.com/articles/roulette-table-payout-maximize-wins/
2034 [NEW]	NJ Regulations N.J. Admin. Code § 13:69F-5.2 – Roulette: payout odds
2035 [NEW]	L&W's Responses and Objections to Evolution's First Set of Interrogatories (Oct. 25, 2024) (excerpts)
2036 [NEW]	Lightning Roulette Game on Evolution's Website https://www.evolution.com/games/lightning-roulette/
2037 [NEW]	Evolution Gaming Wins Product Innovation of the Year at G2E, Real Money Action (Oct. 12, 2018)
2038 [NEW]	*The 2018 Global Gaming Awards Las Vegas Categories* https://stargambling.net/news/global-gaming-awards-2018-vegas.html (last visited Sep. 23, 2025).
2039 [NEW]	*Evolution and Scientific Games Strike Land-based Lightning Roulette Deal,* PR NEWSWIRE (May 27, 2021), https://www.prnewswire.com/news-releases/evolution-and-scientific-games-strike-land-based-lightning-roulette-deal-301300565.html

I. Introduction

Patent Owner Evolution Malta Limited ("Evolution" or "Patent Owner") is the leading provider of live casino games around the world. Live casino games are a form of online gaming where the games are facilitated in real-time by a human dealer, and players place wagers and participate online. One of Evolution's leading games is Lightning Roulette, which is enormously popular amongst players. The game has received multiple industry awards since its 2018 launch, including "Product Innovation of the Year." EX2006. U.S. Patent No. 10,629,024 ("the '024 patent") is one of a number of patents that protects Evolution's Lightning Roulette game that helped rejuvenate the gaming industry.

This IPR is the latest battle in the years-long dispute between Evolution and Petitioner Light & Wonder, Inc. ("Petitioner" or "L&W") relating to L&W's launch of its copycat version of Lightning Roulette. Back in 2021, Evolution and L&W entered into an agreement for L&W to help develop a table-version of Evolution's Lightning Roulette that could be sold to and played in land-based casinos. As part of that contract, Evolution granted L&W an exclusive license to the '024 patent, among other patents. But just months after the agreement was signed, L&W attempted to terminate it and never developed a table-version of Lightning Roulette. Unbeknownst to Evolution at the time, L&W instead was working on a copycat game, called RouletteX, which it promptly launched a month

later. EX1015, ¶23. When L&W continued to launch additional versions of copycat games, Evolution sued L&W in 2024 for trade secret misappropriation and patent infringement.

Against that backdrop, Evolution respectfully requests denial of L&W's IPR petition. L&W advances three grounds, but it has failed to establish a reasonable likelihood that any claim is unpatentable.

For its Grounds 1 and 2, L&W relies on the Kido reference but Kido does not disclose a "first payout" that is "higher than a second payout" for "a spin of the roulette wheel" as required by every independent claim. L&W's arguments about Kido is based on its contortion of what a "payout" is in roulette.

In the context of the '024 patent, which is directed to an improved roulette game, a "payout" is the amount a player will win in relation to the amount wagered. A roulette payout typically "is written in odds format and represents the coefficient to multiply the stake of a won bet." EX2028, 10. Countless sources show that roulette payouts typically are written as "35:1" or "35 to 1" meaning a player wins $35 for each $1 wagered. *E.g.*, *id.*, 11 ("35:1"); EX2029, 2; EX2030, 1 ("35:1"); EX1014, 007 ("35 to 1"). Consistent with its ordinary meaning, the '024 patent describes "payouts" in terms of the amount the player will win based on the amount wagered, such as 29:1, 49:1, and 499:1. EX1005, 5:15-30.

Kido discloses a roulette gaming device where players can win two different awards: a normal roulette payout or a progressive jackpot. EX1007, [0129]. Kido's normal roulette payout does not disclose determining a "first payout for a first position" that "is higher than a second payout for a second position" because for any spin of the roulette wheel, the payout for each numbered position of the roulette wheel is the same. EX1007, Fig. 8 [0083]; Pet., 8 (admitting players always receive "the normal payout" for a bet on a position on the wheel).

L&W incorrectly asserts that Kido's separate progressive jackpot feature meets the claimed "first payout." Unlike a roulette payout, Kido's progressive jackpot is not defined as 35:1 or 100:1 or 500:1; it is simply the total amount a player would receive (*e.g.*, JP¥8,850,019) regardless of the wager. EX1007, [0226], Fig.5. If a player wins Kido's progressive jackpot, the entire jackpot is received no matter how much was wagered. EX1007, [0230]. Thus, the progressive jackpot is not an amount a player will win in relation to the amount wagered. Moreover, the value of Kido's progressive jackpot is determined and displayed to players in advance, and does not provide the same kind of excitement as the '024 patent, where increased payouts are determined for each spin of the roulette wheel.

In an attempt to patch over gaps in Kido, L&W relies on features that require multiple spins of the roulette wheel, and thus, are not for "a spin of the roulette

wheel" as required by the claims. L&W also mixes and matches features from different embodiments and proposes modifications to what Kido actually discloses. All of L&W's arguments fail, and Kido neither anticipates nor renders obvious any claim.

For Ground 3, L&W relies on Baron, but Baron's game requires spinning three different roulette wheels and using the outcomes of all three spins to determine the game result. Baron is fundamentally different than the claims, which require multiple game operations to be done for "a spin of the roulette wheel." That limitation was added during prosecution to distinguish a reference where a player could win a higher amount if the ball landed on the same number on *two* spins of the roulette wheel. EX1006, [061], [079]-[080]. Evolution amended the claims to specify that multiple claimed game operations must relate to "a spin of the roulette wheel," not multiple spins, and the claims were allowed. Baron requires multiple spins of roulette wheels, and thus, it neither anticipates nor renders obvious the claims.

Finally, L&W does not dispute the substantial objective evidence of non-obviousness. For example, Evolution's Lightning Roulette is the commercial embodiment of the claims and the game has won multiple industry awards. Two organizations named Lightning Roulette the "Product Innovation of the Year" in 2018, which shows that L&W's assertion that the claims would have been obvious

in 2018 is baseless. Such objective indicia are often the "most probative and cogent evidence of nonobviousness in the record." *Stratoflex, Inc. v. Aeroquip Corp.*, 713 F.2d 1530, 1538 (Fed. Cir. 1983). In addition, L&W launched a copycat version of Lightning Roulette, and its executives specifically praised Lightning Roulette. This unrebutted evidence shows that claims are not obvious.

L&W has failed to establish a reasonable likelihood that any challenged claim is unpatentable, and the Petition should be denied.

II. Factual Background

A. Evolution

Evolution is a global gaming company, and a leading provider of fully-integrated software casino solutions to online gaming operators and land-based casinos. Evolution was founded in 2006 as one of the first providers of B2B live casino solutions in Europe. Live casinos are a form of online gaming where the games are facilitated in real-time by a human dealer and players participate online by watching, placing wagers, and optionally chatting with other players or the dealer. Live casinos have become immensely popular among players because they replicate online the environment of a land-based casino. Due to its industry-leading solutions, Evolution has been named Live Casino Supplier of the Year at the EGR B2B Awards, which reward the best service providers in the online gaming industry, 12 years in a row. EX2004.

B. Standard Roulette

Roulette is a popular casino game that is played by spinning a roulette wheel, "spinning" a ball by rolling it around the outside of the wheel, and placing wagers on where the ball will fall. Wagers or bets are made by placing chips on a roulette board. Images of an American roulette wheel and board are below.

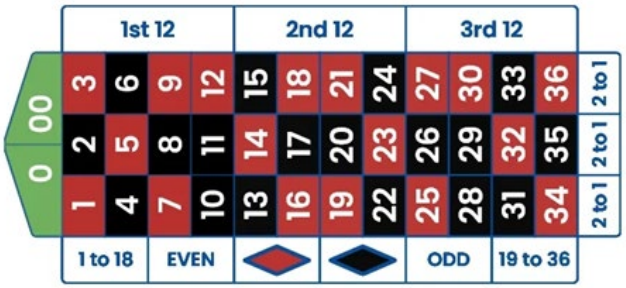

Typically, an American roulette wheel has 38 positions, numbered 0, 00, and 1-36.[1] EX1005, 2:59-3:1. There are 18 odd numbers, 18 even numbers, and 0 and 00 are considered to be neither even nor odd. Each position is given a color: 18 numbers are red, 18 are black, and 0 and 00 are green. *See generally*, EX2028, 9; EX1014, 003-004.

Roulette has different types of bets, and each type has a different payout. Players can make what is called a "straight up" bet on a single number on the

[1] European roulette wheels typically have 37 positions, numbered 0 and 1-36.

wheel. Straight up bets are made by placing chips on the corresponding number on the board. A "split" bet is made by placing a chip on the line between two numbers and is a bet on both. A "corner" bet is made by placing a chip on a corner where four numbers meet and is a bet on all four numbers. These bets are made by placing chips on the numbered portion of the roulette board and are often called "inside bets." *See generally*, EX2028, 10-12; EX2031; EX1014, 005-007.

Players can also make "outside" bets, which correspond to the boxes around the outside of the grid of roulette numbers. For example, players can bet on whether the ball will land on a red or a black number. They also can bet on whether the ball will land on an even or odd number. These bets are made by placing chips on the corresponding box.

Only straight up bets correspond to a single position on the roulette wheel.

C. Evolution's Lightning Roulette Product that Is Covered by the '024, '014, and '371 Patents

A key driver of Evolution's success is its commitment to innovation and product excellence, allowing it to create new and exciting games that players love. Evolution's investments have led to a number of novel and successful products, including Lightning Roulette, which launched in 2018. To protects its innovations, Evolution sought and obtained multiple patents that cover the game, including the

’024 patent and its child and grandchild patents, U.S. Patent No. 11,011,014 (“the ’014 patent”), and U.S. Patent No. 11,756,371 (“the ’371 patent”).[2]

Lightning Roulette was unlike any other roulette game that came before it. In traditional roulette, players can make straight-up bets by putting chips on a number on a physical game table that corresponds to a numbered position on the roulette wheel. If the ball lands in that position, the player receives a standard payout of 35:1. In Lightning Roulette, players place bets electronically by selecting the numbers and the amount to wager. The players can see a live video feed from a studio, where a host presents the game. An example user interface is shown below.[3]

---

[2] The ’014 and ’371 patents are subject to IPR2025-01072 and -01078.

[3] Images taken from https://games.evolution.com/live-casino/live-roulette/lightning-roulette/ Black and white images of Lightning Roulette also appear in Figures 3 to 5 of the ’024 patent.

After bets are closed each game, there is a "Lightning Round" where the Lightning Roulette software randomly selects one or more numbers as "Lucky Numbers" that are assigned an increased payout called a "Lucky Payout" or multiplier (*e.g.*, between 50x and 500x). EX2011, 2. If the ball lands in one of the selected Lucky Numbers for that round, any player who bet on that number will receive the assigned increased Lucky Payout. An example of the start of the Lightning Round is shown below. *See also* EX1005, Fig. 4.

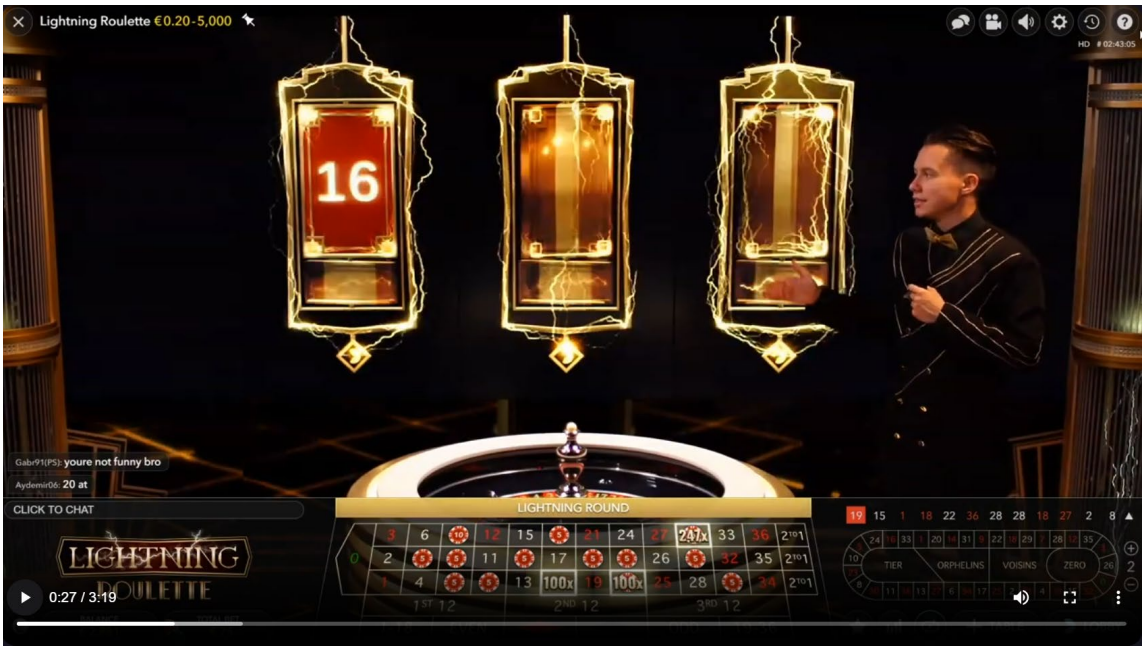

To create excitement, Lightning Roulette selects the Lucky Numbers and Lucky Payouts after bets are closed but before the ball lands in a pocket on the roulette wheel. The Lucky Payouts can have a variety of increased values such as 49:1 (50x), 99:1 (100x), or 499:1 (500x). As the ball and wheel are still spinning, the player can see the selected Lucky Numbers and Lucky Payouts and whether the player has a bet on any of those numbers. These functions are covered by the ’024 patent’s claims. For example the claims specify selecting at least one Lucky Number (“randomly select a first selected position on the roulette wheel for the spin of the roulette wheel prior to the ball falling into a position on the roulette wheel…”) as well selecting a Lucky Payout for each Lucky Number (“determine a first payout for first position and a second payout for the second position for the

spin of the roulette wheel, wherein the first payout is higher than the second payout”).

The dynamic selection of the Lucky Numbers and Lucky Payouts increases the game’s level of excitement. For example, the image below shows that the ball is still circling the wheel, that both 22 and 30 were selected as Lucky Numbers, and that 22 has a payout of 100x and 30 has a payout of 500x. As the ball spins and slows down, the player can see that he wagered on both 22 and 30 so he has two chances to win an increased payout: if the ball lands on 22 (100x) or on 30 (500x).

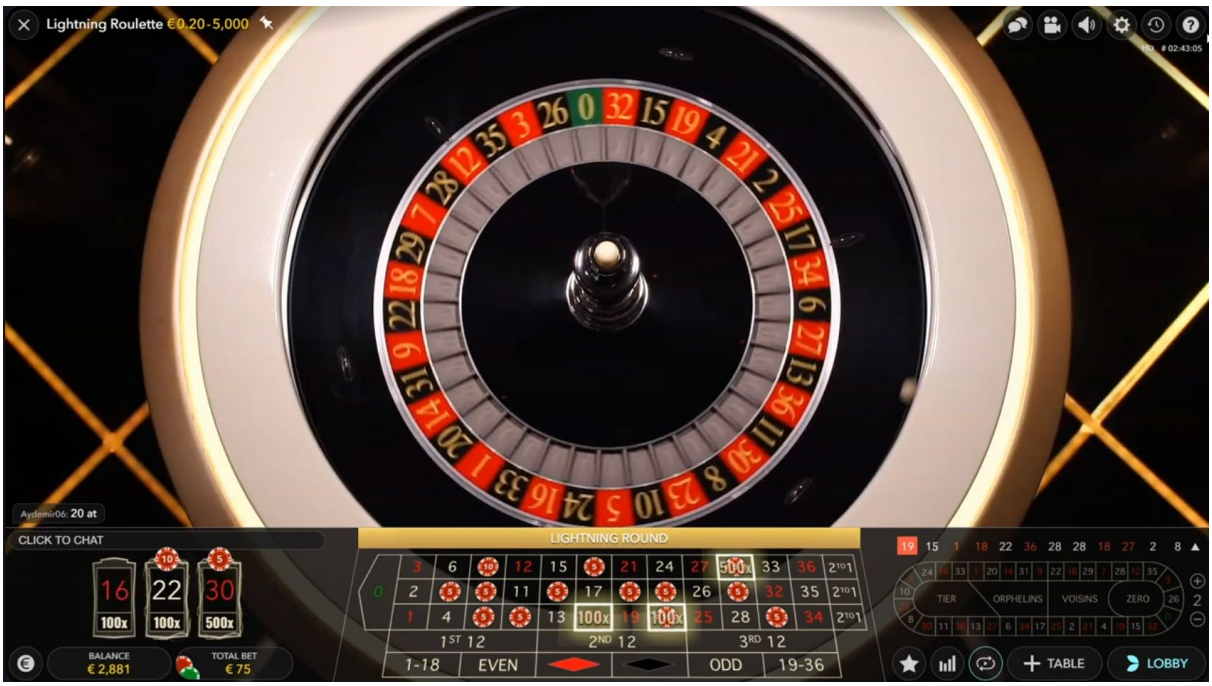

The opportunity to win increased payouts makes Lightning Roulette highly attractive to players. For example, a win on a $5 bet with a typical roulette payout of 35:1 is $180. But if a player wins a $5 bet with a 500x multiplier, the player

will get a $2,500 payout. This is shown in the image below. *See also* EX1005, Fig. 5.

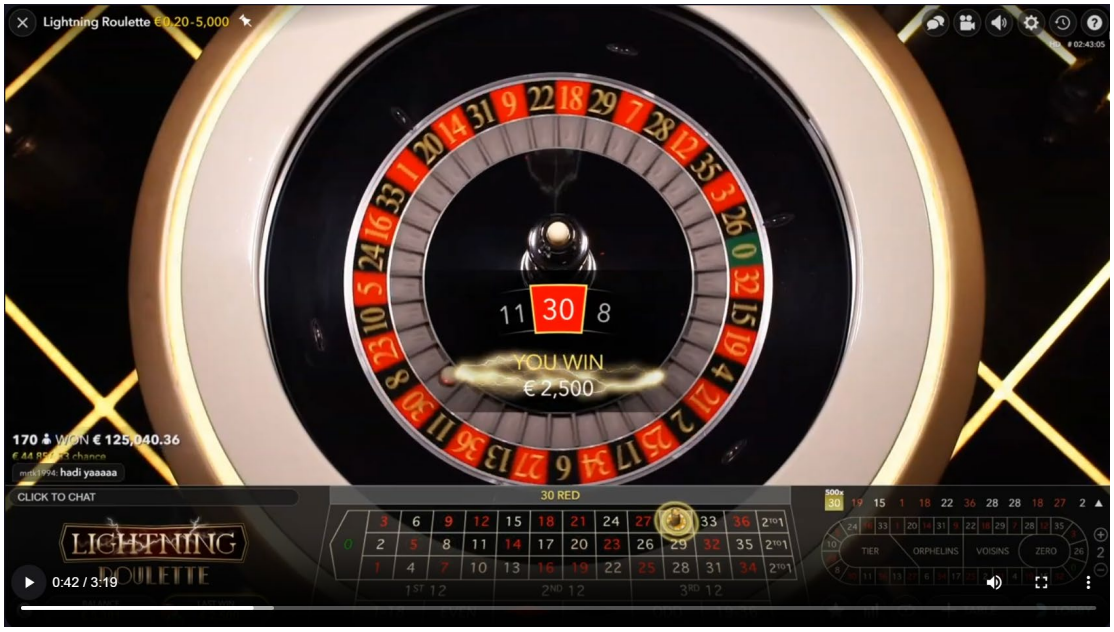

Due to its unique features and gameplay, Lightning Roulette has been hugely successful and is enjoyed by millions of players around the world. The game's novelty and success has been widely recognized in the gaming industry. After it was released in 2018, Lightning Roulette was awarded "Game of the Year" and "Product Innovation of the Year." EX2005; EX2006; EX2007; EX2009; EX2010. These prestigious awards reflect the industry's recognition of Evolution's innovation and contribution to the field.

D. Evolution's Partnership with Light and Wonder

In addition to the industry at large, L&W itself has recognized Lightning Roulette's success and innovative nature. For example, a L&W senior executive called it a "a truly unique roulette experience for players" and predicted that, with

its "big-win multipliers, Lightning Roulette is sure to be one of the most visually engaging and entertaining live table games ever offered." EX2008. L&W apparently was so impressed by the game, it decided to copy it.

In March 2021, Evolution and L&W entered into an agreement for L&W to develop a table version of Lightning Roulette that could be played in-person. EX2014, 4. As part of the agreement, L&W received an exclusive license to the '024 patent, and to related pending applications, for the purpose of developing a table version of Evolution's Lightning Roulette game to sell to land-based casinos. EX2014, 6, 29. For the project, Evolution shared highly confidential and proprietary trade secrets about Lightning Roulette. EX1015, ¶¶16-18. After obtaining Evolution's highly confidential information, however, L&W abruptly sought to unilaterally terminate the agreement in August 2021, just before announcing the launch of its own copycat game, RouletteX. EX1015, ¶¶17-23. Just like Lightning Roulette, L&W's RouletteX randomly adds multipliers to several roulette numbers each time the roulette wheel is spun such that, if one is hit, players are awarded various increased payouts. That game infringes the '024 patent.

III. Person of Ordinary Skill in the Art

L&W proposes a level of ordinary skill in the art. Pet., 5-6. For the purposes of this Preliminary Response, Evolution does not set forth an alternative

level of skill for a person of ordinary skill in the art (POSA) because the Petition should be denied even under L&W's proposal. Evolution's silence at this phase regarding the appropriate level of skill of a POSA is not an agreement with L&W's proposal. Evolution reserves the right to challenge L&W's proposal, and to propose an alternative or additional level or ordinary skill, in future proceedings.

IV. Claim Construction

To construe the claims in a patent, the words are given their plain and ordinary meaning as they would have been understood by a POSA at the time of the alleged invention after reading the entire patent. *Phillips v. AWH Corp.*, 415 F.3d 1303, 1312-13 (Fed. Cir. 2005); 37 C.F.R. § 42.100. A term needs to be construed only to the extent necessary to resolve the dispute. *Vivid Techs., Inc. v. Am. Sci. & Eng'g, Inc.*, 200 F.3d 795, 803 (Fed. Cir. 1999).

Below, Evolution proposes a construction for the term "payout" and responds to L&W's implicit construction of the term "for a spin of the roulette wheel." In the Petition, L&W did not explicitly propose a construction for any claim term. In future proceedings, Evolution reserves the right to challenge L&W's apparent interpretation of any claim term, and to propose alternative or additional claim constructions.

A. Payout

Every challenged claim specifies a "first payout for the first single position" and a "second payout for the single second position." The term "payout," in the context of the '024 patent, means the amount a player will win in relation to the amount wagered. The claims also specify that each payout is for a "single position," which means the payout is for a bet made on a single number.

The '024 patent uses the term "payout" consistent with its ordinary meaning in roulette. It describes exemplary payouts in terms of the amount the player will win based on the amount wagered, such as 29:1 or between 49:1 and 499:1.

> For example, in some embodiments, increased payouts for the selected numbers can range from 49:1 to 499:1… The payout for numbers not selected at 210 can be set to account for the increased payouts of the selected numbers. For example, in some embodiments, the payout for the numbers not selected can be set to 29:1.

EX1005, 5:15-30. The patent explains that a notation of "500x" can be used "to indicate an increased payout of 499:1 (499:1 plus the original bet return is 500×)." *Id.*, 6:8-10.

In roulette, the "payout" for a bet refers to the amount a player will win in relation to the amount wagered and is typically written in odds format such as 35:1. EX2028, 10 ("The payout is written in odds format and represents the coefficient to multiply the stake of a won bet."). EX2029, 2 ("Roulette payouts are generally

stated as 'x-to-1', which means that for every dollar you bet, you will win x dollars, plus you will get back your original bet."). For example, the standard payout for a straight up bet on a single position is 35 to 1 (also expressed 35:1), meaning the player will win $35 for every $1 wagered (receiving $36 back). The standard payout for a bet on red/black or odd/even is 1 to 1 (or 1:1), meaning the player will win $1 for every $1 wagered (receiving $2 back).[4] These payouts are shown in the table below.

Bet	Payout	European Roulette Odds	American Roulette Odds
Straight Up	35:1	2.7%	2.6%
Split	17:1	5.4%	5.3%
Red/Black	1:1	48.65%	47.37%
Odd/Even	1:1	48.65%	47.37%

EX2030, 1 (image simplified).

Many sources reflect the same standard use of the term "payout" in roulette. Because roulette payouts are typically stated in odds format (*e.g.*, 35:1), they are

[4] Outside bets, such as red/black or even/odd, are bets corresponding to multiple positions on the roulette wheel (*e.g.*, all 18 red numbers or all 18 odd numbers). Similarly, bets like corners and splits, are bets on multiple position on the roulette wheel. Thus, none of those bets provide payouts for a "single position" on the roulette wheel.

sometimes called payout odds. Many sources define roulette payouts the same way, and use the same standard payouts:

Roulette Star

Bet	Other Names	Payout	p European	p American
Red / Black	Color bet	1:1	48.65%	47.37%
Even / Odd		1:1	48.65%	47.37%
Low / High	1-18 / 19-36	1:1	48.65%	47.37%
Dozen		2:1	32.43%	31.58%
Column		2:1	32.43%	31.58%
6 Number	Six line, Double street	5:1	16.22%	15.79%
5 Number *	Top line, Basket, First five	6:1	-	13.16%
4 Number	Corner, Square	8:1	10.81%	10.53%
3 Number	Street, Line	11:1	8.11%	7.89%
2 Number	Split	17:1	5.41%	5.26%
Single Number	Straight	35:1	2.70%	2.63%

EX2031, 1.

Odds Guide

Odds and potential payout of different bet types

Roulette bet type	Example roulette bet	Potential payout	European roulette odds	American roulette odds
Column	Any number in the third column	2:1	32.40%	31.6%
Dozen	Any of 13 to 24	2:1	32.40%	31.6%
Even bets	Black over red	1:1	48.60%	47.4%
Single number	7	35:1	2.70%	2.60%
Two numbers	Either 19 or 20	17:1	5.4%	5.3%
Three numbers	Any of 28, 29 or 30	11:1	8.1%	7.9%
Four numbers	Any of 5, 6, 8 or 9	8:1	10.8%	10.5%
Five numbers	Any of 0, 00, 1, 2, or 3	6:1	13.5%	13.2%
Six numbers	Any of 4 to 9	5:1	16.2%	15.8%

EX2032, 2.

Vegas Aces

What is the roulette table payout?

The return on the bet on the roulette table depends on the type of bet made. Here are some common bets and their respective roulette table payouts:

Straight-up Bet (single number): 35 to 1.

Split Bet (two numbers): Pays 17 to 1.

Street Bet (three numbers): Pays 11 to 1.

Corner Bet (four numbers): Pays 8 to 1.

Line Bet (six numbers): Pays 5 to 1.

Column or Dozen Bet (12 numbers): 2 to 1.

Even/Odd, Red/Black, 1-18/19-36: Pays 1 to 1.

How Does a Roulette Table Payout?

The roulette table payout depends on the likelihood of the bet made. Once the ball lands on a number, the croupier reveals the number and color of the winning bet and removes all the losing bets. The winning bets are then paid out at the payout rate displayed in the payout table. For instance, a straight-up bet on a single number, which is the toughest to predict, pays 35 to 1.

EX2033, 3.

American Casino Guide

Straight-up – This is a bet based on one specific number. It offers a payout of 35-to-1. So, if you bet $2, you would win $70, plus you keep your original $2 bet.

Split bet – A bet that is on two neighboring numbers. You put the chip on the line between the two numbers to make this bet. This bet pays 17-to-1. So, if you bet $2, you would win $34, plus you keep your original $2 bet.

EX2029, 3.

New Jersey Casino Regulations

Bets	Payout Odds
Straight	35 to 1
* * *	* * *
Red	1 to 1
Black	1 to 1
Odd	1 to 1
Even	1 to 1

N.J.A.C. 13:69F-5.2; EX2034, 1.

Roulette Odds and Profits

Inside bet	Description	Payout
Straight Up	A bet directly on any single number	35 to 1
Split Bet	A bet split between any two numbers	17 to 1

Outside bet	Description	Payout
Colour Bet	A bet on either red or black	1 to 1
Even/Odd Bet	A bet on either even or odd	1 to 1

EX2028, 11.

Wikipedia

Bet name	Winning spaces	Payout
0	0	35 to 1
00	00	35 to 1
Straight up	Any single number	35 to 1
Odd	1, 3, 5, ..., 35	1 to 1
Even	2, 4, 6, ..., 36	1 to 1
Red	32, 19, 21, 25, 34, 27, 36, 30, 23, 5, 16, 1, 14, 9, 18, 7, 12, 3	1 to 1
Black	15, 4, 2, 17, 6, 13, 11, 8, 10, 24, 33, 20, 31, 22, 29, 28, 35, 26	1 to 1

EX1014, 007.

Bet	Payout	European Roulette Odds	American Roulette Odds
Straight Up	35:1	2.7%	2.6%
Split	17:1	5.4%	5.3%
Red/Black	1:1	48.65%	47.37%
Odd/Even	1:1	48.65%	47.37%

EX2030, 1 (image simplified).

B. "A Spin of the Roulette Wheel"

The term "a spin of the roulette wheel" should be given its ordinary meaning in the context of the patent and file history, which is one spin of one roulette wheel.

The term "a spin of the roulette wheel" appears in many elements of the independent claims. For example, claim 1 of the '024 patent requires a processor configured to:

> receive first bet information for a first bet from a first player device of a first player ***on a spin of the roulette wheel***, the first bet information corresponding to at least a first position on the roulette wheel;

receive second bet information for a second bet from a second player device of a second player ***on the spin of the roulette wheel***, the second bet information corresponding to at least a second position on the roulette wheel that is different from the first position;

determine that the roulette wheel and the ball have been spun ***for the spin of the roulette wheel***;

randomly select a first selected position on the roulette wheel ***for the spin of the roulette*** wheel prior to the ball falling into a position on the roulette wheel, wherein the first selected position is the same as the first position;

determine a first payout for first position and a second payout for the second position ***for the spin of the roulette wheel***, wherein the first payout is higher than the second payout;

determine that the ball has fallen in the first position ***for the spin of the roulette wheel***; and

indicating that the first player is to be paid at the first payout ***for the spin of the roulette wheel***.

On its face, the claim requires "a spin of the roulette wheel," which is one spin of one roulette wheel. The claim further specifies that each of the operations be performed "for ***the*** spin of the roulette wheel," meaning the same spin of the same wheel. The claim language is consistent with the specification, which discloses a game that has one roulette wheel and where all of the claimed operations relate to the same spin of that wheel. *See, e.g.*, EX1005, Figs. 2-5.

Evolution added the "spin of the roulette wheel" limitations during prosecution to distinguish the Yee reference. The Examiner rejected pending claims based on Yee, relying on two different spins of Yee's roulette wheel to disclose the claim elements. In Yee, a player could win a higher amount if the ball landed on the same number in two back-to-back spins of the roulette wheel. EX1009, 10:15-18, 10:48-51. Yee states that "[t]he wager may be resolved by determining whether the randomly generated number is identical to a randomly generated number from an immediately preceding round." EX1009, 10:15-18.

The Examiner found that a first spin of Yee's roulette wheel disclosed randomly selecting a first selected position of the roulette wheel, and then a second spin of the roulette wheel disclosed that the ball had fallen into the first position. EX1006, 061, 079-080. In response, Evolution traversed the Examiner's reliance on two spins of the roulette wheel by amending the claims to specify that the claimed operations occurred "for the spin of the roulette wheel" and that the selection of a first position occurred "prior to the ball falling into a position on the roulette wheel." EX1006, 072-073, 079-080. The Examiner agreed with this distinction and allowed the claims. EX1006, 093. Thus, Evolution expressly distinguished systems and processes that use multiple spins of a roulette wheel, and limited the claims to systems and processes that use ***a single spin*** of the roulette

wheel to determine a first payout for a first position that is higher than a second payout for a second position.

In its analysis of the Baron reference, L&W implicitly construes "a spin of the roulette wheel" to mean "a 'single ***round'*** of roulette." Pet., 67; *see also id.*, 60, 63, 69. L&W does so in an attempt to capture the Baron reference, which discloses a roulette game that spins ***three*** roulette wheels (*i.e.,* ***three*** spins) during a single game and determines the outcome of the game using all three wheels. An example of Baron's game is shown in Baron's Figure 4, below.

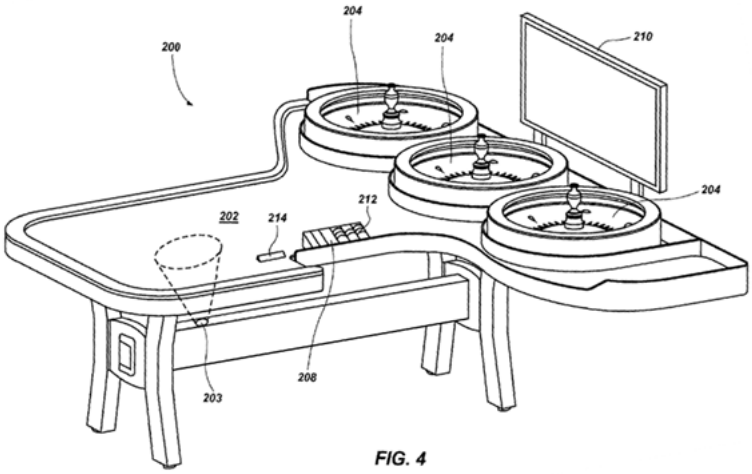

FIG. 4

L&W's construction is just a conclusory statement unsupported by any evidence. Two examples of L&W's "analysis" of the claim term are below:

> Baron explains that the plurality of roulette outcomes are "generated in a single round of the wagering game."… The randomly generated outcomes in Baron are thus for "the spin of the roulette wheel."

Pet., 63 (citations omitted).

> Baron discloses that a plurality of roulette outcomes can be generated "in a single round of the wagering game."… [T]hey are generated for ***a "single round" of roulette, i.e., a single spin of the roulette wheel***.

Pet., 67 (citations omitted and emphasis added); *see also id.*, 60, 69. What L&W calls a "single round" in Baron is actually ***three*** spins that take place on ***three*** roulette wheels—one spin of each of the three roulette wheels—***not*** "a single spin of the roulette wheel."

Not only is L&W's construction unsupported by simple counting or any evidence, L&W does not even cite the '024 specification or file history. There are no supportive citations because the '024 patent does not disclose use of multiple roulette wheels, and during prosecution, Evolution expressly distinguished systems that require multiple spins. L&W cites to the declaration of its expert, Dr. Friedman, but he provides no explanation either; he just equates the two phrases without offering any rationale. *See* EX1003, ¶¶252, 261.

L&W's proposed construction is improper, wrong, and should be rejected.

V. Argument

A. L&W Has Failed to Show that Kido Anticipates or Renders Obvious Any Claim

In L&W's Grounds 1 and 2, it relies on Kido as teaching all of the elements of the independent claims. As explained below, L&W has failed to establish a reasonable likelihood that Kido anticipates or renders obvious any claim.

1. Summary of Kido

Kido discloses a gaming machine for playing roulette. EX1007, [0080]. A roulette wheel is in the center of the machine, and player stations surround it. EX1007, [0114]. The game is machine-operated, and there is no croupier or host. *Id.*, [0114]. Players can use the machine by purchasing or renting a "medal" and inserting the medal into the machine. *Id.*, [0005].

The roulette game includes several game modes that can award players what Kido calls a "privilege" in certain circumstances. EX1007, [0015]-[0016], [0082]-[0083], [0195], [0209], [0220], [0235]. In these game modes, the game labels one number on the roulette wheel with a "special game value award mark," such as by putting a star mark next to the number. EX1007, [0082]. Kido discloses that the special game value award mark is set in advance, before a game starts. EX1007, [0195], [0209], [0221], [0235]. If the ball falls into the pocket that was given a special game value award mark and the player placed a wager on that number, the player is awarded a privilege. EX1007, [0082]-[0083].

Kido has four different privilege routines: Special Rate Award Routine, Second Special Rate Award Routine, Prog Routine, and Free Spot Routine. EX1007, [0185]. For three of the routines (Special Rate Award, Second Special Rate Award, and Free Spot), the awarded privilege applies to the next spin of the roulette wheel and does not confer the player with any benefit for the current spin

of the roulette wheel. EX1007, [0203]-[0204], [0217], [0243]. For the last routine (Prog), the privilege awarded is based on previous spins of the roulette wheel, also not the current spin. When the Prog Routine is used, the game withholds 0.5% of all credits that are bet and puts them in a progressive jackpot that players can win. *Id.*, [0129], Fig. 3.

For all of the privilege routines, Kido discloses that the payout for every position on the roulette wheel is the same on any single spin of the wheel. *E.g.*, EX1007, Fig. 8, [0083].

2. Kido Does Not Disclose "Determine a First Payout for the First Position and a Second Payout for the Second Position For the Spin of the Roulette Wheel, Wherein the First Payout Is Higher Than the Second Payout"

Kido does not disclose at least three aspects of this claim element,[5] which appears in every challenged claim.

a) Kido Does Not "Determine a First Payout for the First Single Position…" That Meets the Claims

Kido does not disclose "a first payout for the first position" that is "higher than the second payout" for a second position. L&W incorrectly asserts that the

[5] In the '024 patent, these correspond to L&W's element 8 of claim 1, and element 5 of claims 8 and 15.

progressive jackpot and the standard roulette award made by Kido's Prog Routine meet the "first payout" element. Pet., 33-35. Neither does.

First, Kido discloses that its basic roulette payout is exactly the same for every position on the roulette wheel, and thus, Kido does not disclose a "first payout for a first position" that "is higher than the second payout for a second position." Kido explains that if a player places a bet on a "mark" (*e.g.*, a number) on the roulette wheel, and the ball lands on that mark, the player receives the ***standard roulette payout*** that is "***based on the game value placed as a bet and a rate corresponding to the mark bet on***." EX1007, [0083]; *see id.*, [0036], [0172]. By "rate" Kido means the "Base Odds" listed in Figure 8, which provide that straight up bets (bets on single positions) payout at "35:1" and which are always used in the Prog Routine.[6] EX1007, Fig. 8, [0232]. This is undisputed, as L&W's expert Dr. Friedman explains "the payout for the winner 'is calculated using the base odds' according to Fig. 8 (e.g., 35:1 for a straight up bet.)." EX1003, ¶160. No matter what position of the wheel a player bets on, the payout the player will

[6] The "Odds of a Star Bonus" apply only during the Special Rate Routines. As explained below, not only do those routines require multiple spins of the roulette wheel, but also, during any given spin, all positions have the same payout. *See* § V.A.2.b., below.

receive for winning a straight up bet is 35:1. EX1007, Fig. 8. Thus, Kido's standard roulette payout cannot be a "first payout" that "is higher than the second payout."

Second, Kido's progressive jackpot is not a "payout." As explained in § IV.A above, in roulette, a "payout" refers to the amount a player will win in relation to the amount wagered on, such as 35:1. Kido's progressive jackpot is different: it is simply the total amount that can be won regardless of the wager. The jackpot does not vary based on how much the player wagered that round. Whether the player wagered $1, $10, or $100, the jackpot is the same.

Kido shows that its device includes a sign that displays the progressive jackpot (highlighted below) to potential players.

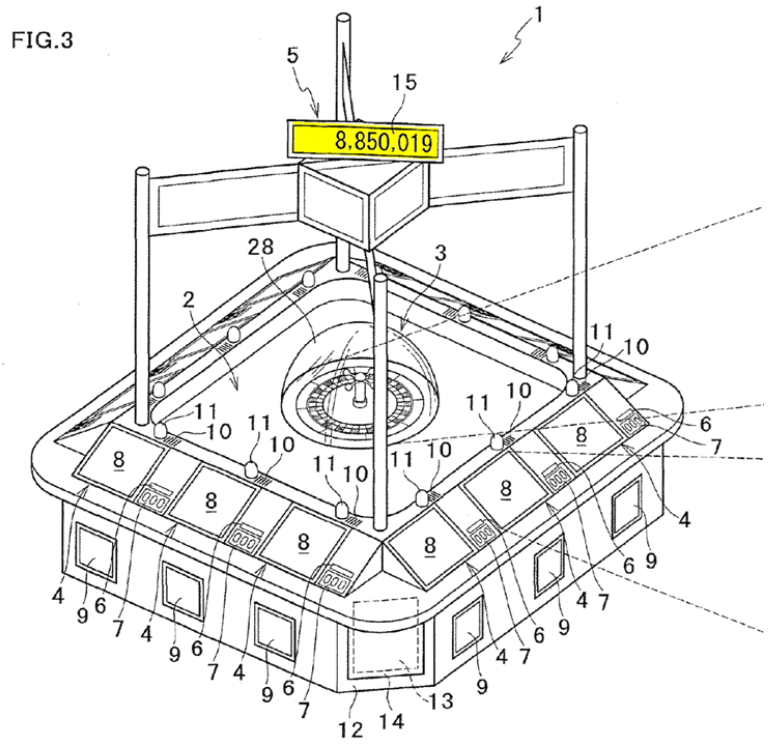

Unlike roulette payouts, the progressive jackpot is not defined as 35:1 or 100:1 or 500:1; it is simply the total amount of the jackpot. EX1007, [0226]. In Kido, if a player wins the progressive jackpot, the player receives the entire jackpot no matter how much was bet. EX1007, [0230].

A progressive jackpot does not provide the same kind of excitement that the ’024 patent’s higher payouts do. Kido’s progressive jackpot grows slowly each time a bet is made and its value is fixed for that round. Kido does not, for example, dynamically determine the amount of the jackpot for each spin of the roulette wheel. Instead, Kido’s device puts 0.5% of the amount wagered into the jackpot, and the jackpot is simply the total accumulated over the prior games. EX1007, [0226]. Kido’s progressive jackpot is fundamentally different than the payouts in the ’024 patent. The claimed systems and methods generate excitement by determining the value of the first payout for each spin of the roulette wheel and setting it to a value that is higher than another payout.

Kido itself recognizes that the progressive jackpot award is separate from and different than its roulette payout. It describes the roulette payout as the award for winning by betting on the number the ball fell into. EX1007, [0231], Fig. 12 (A12). The progressive jackpot is awarded as a “privilege” if the player won on a special game value award mark (star mark). EX1007, [0082], [0108], Fig. 12 (A11). The award of the payout and of the progressive jackpot (the “game value

accumulated in every roulette game") are completely separate steps of the Prog Routine:

> (4c) to roll the ball and determining, as a win mark, a mark corresponding to a stop position of the ball;
> (4d) ***to award a payout*** when the win mark corresponds to the bet area having been bet on, ***based on the game value placed as a bet and a rate relative to a bet type***, which rate corresponds to the bet area having been bet on; and
> (4e) ***to award a game value accumulated in every roulette game***, ***when the win mark is the special game value award mark*** and the bet area bet is also the special game value award mark.

EX1007, [0033]-[0037].

Even L&W recognizes that the progressive jackpot is distinct from the normal roulette payout as it describes them as separate: "In the event of a 'Prog bonus,' the winning player receives not only the normal ***payout*** for winning ***but also an 'accumulated portion,'*** which as the name suggests, progressively increases over time." Pet., 8 (emphases added). L&W's expert Dr. Friedman likewise explains that "the ***accumulated game value*** or progressive prize in step A11 ***is added to*** the base odds ***payout*** from step A12 when the win occurs in a star mark." EX1003, ¶161. As Dr. Friedman recognizes, the payout awarded for betting on the winning position is always paid at the same rate, irrespective of

whether the position had the star mark and the player also wins the progressive jackpot.

Kido's progressive jackpot is different from a roulette payout, and it is not a "payout" within the meaning of the claims. Thus, Kido does not disclose this claim element.

b) Kido Does Not Disclose a First Payout "For the Spin of the Roulette Wheel"

Kido's progressive jackpot also cannot meet this claim element because is not "for a spin of the roulette wheel." Each time the wheel is spun, 0.5% of the amount wagered is added to the progressive jackpot, and thus, the jackpot's value reflects multiple spins of the roulette wheel. *See* EX1007, [0226]. Kido itself provides that the progressive jackpot is based on multiple games (and therefore multiple spins of the wheel). For example, in the steps of the Prog Routine, Kido describes the jackpot as based on multiple games:

> (4b) to subtract a predetermined amount of value from the game value, and add the predetermined amount to an accumulated amount which is ***an amount having accumulated up to the very previous roulette game***;
>
> * * *
>
> (4e) ***to award a game value accumulated in every roulette game***, when the win mark is the special game value award mark and the bet area bet is also the special game value award mark.

EX1007, [0033]-[0037]. Therefore, the value of the jackpot is determined using multiple spins of the roulette wheel and is not "for a spin of the roulette wheel" as claimed.

In addition to the Prog Routine, L&W suggests that Kido's two Special Rate Award Routines disclose this element. According to L&W, when either of the two Special Rate Award Routines are used, if a player wins on a star mark, the player receives the "privilege" of getting higher payouts for bets. Pet., 33 n.3. What L&W omits is that both Special Rate Award Routines change the payout rates ***for the next game*** and thus ***require a second spin*** of the roulette wheel. Neither Special Rate Award Routine increases the payout on the current spin of the roulette wheel and players do not receive a higher payout for winning on a star mark. For example, Kido explains the special rate routine as follows:

> When it is determined that a win mark determined by an execution of a roulette game matches with a special game value award mark bet, ***a roulette game is again executed***. Then, ***when a win is again made***, a game value obtained by multiplying a rate (special rate) having increased a base rate by the game value placed as a bet is awarded to a player.

EX1007, [0023]; *see also* EX1007, [0186] ("when the routine is a special rate award routine, ***a re-game is executed*** under state that the odds of the corresponding unit game are doubled"), [0203] ("the odds of the corresponding

unit game are doubled (B11), as shown in FIG. 8. Then ***a re-game is executed***"), [0217] ("When it is determined that it is made a win in the star mark 88 (C8, YES), ***the odds when a next unit game is executed*** are doubled as the odds of a star bonus (B12), as shown in FIG. 8."). Neither applies a higher payout rate on a single spin, and thus, neither meets the claim language.

Moreover, during the second spin, all positions have the same increased payout: the Star Bonus Odds in Figure 8, setting the payout for a straight up bet to 71:1. Because the payout for each position on the wheel is the same (71:1) during the second spin, there is also no first and second payout where the first payout is higher than the second. This is an additional reason the two Special Rate Award Routines do not meet this claim element.

c) Kido Does Not "Determine… a Second Payout for the Second Position For the Spin of the Roulette Wheel"

Kido does not disclose that its Prog Routine "determine[s]… a second payout" for a "second position." L&W points to A11 and A12 in Figure 12 as allegedly corresponding to determining the first payout and the second payout. Pet., 34-35. In steps A11 and A12, Kido determines the award for only one position on the roulette wheel: the position the ball fell into. Kido does not disclose determining a payout for a different position on the roulette wheel. Nor would there be any reason to determine in steps in A11 and A12 a payout for a

second position because the winning number has already been selected at that time. The payout for any other position is irrelevant.

Similarly, the Special Rate Award Routines also determine a payout only after the ball has landed in a position on the roulette wheel. EX1007, Fig. 9 (steps B10 and B14), Fig. 11 (step C10). In those steps, Kido determines the award for only one position on the roulette wheel: the position the ball fell into. Kido does not disclose determining a payout for a second position on the roulette wheel. Nor would there be any reason in steps B10, B14, or C10 to determine a payout for a second position because the winning number has already been selected at that time. The payout for any other position is irrelevant.

3. L&W's Anticipation Argument Is Improper

While L&W argues that Kido "anticipates and renders obvious" the challenged claims, L&W has not provided a proper anticipation analysis. For one thing, L&W does not identify where Kido discloses an element versus where it renders an element obviousness. Instead, L&W lumps anticipation and obviousness together in one section, obscuring its actual arguments. More problematically, L&W's Ground 1 mixes and matches features from different embodiments in Kido and proposes modifications to Kido. *Net MoneyIN, Inc. v. VeriSign, Inc.*, 545 F.3d 1359, 1369 (Fed. Cir. 2008) (to anticipate, a reference "must not only disclose all elements of the claim within the four corners of the

document, but must also disclose those elements 'arranged as in the claim'"). An anticipating disclosure must be "arranged" in the prior art reference just as in the claim, rather than as "multiple, distinct teachings that the artisan might somehow combine to achieve the claimed invention." *Microsoft Corp. v. Biscotti, Inc.*, 878 F.3d 1052, 1063, 1067 (Fed. Cir. 2017) (citation omitted). L&W's mixing and matching and its modifications is not proper for anticipation, thus its Ground 1 must be limited to obviousness.

For example, although L&W primarily relies on the Prog Routine and Figure 12, L&W also relies on features from different embodiments that are not part of the Prog Routine. *See* Pet., 27-28, 33. In particular, L&W asserts features from the Special Rate Award Routines (Figs. 9 and 11) teach several claim limitations. Pet., 27-28, 33. But the Prog Routine is different from the Special Rate Award Routines. Kido discloses four privilege routines (Special Rate Award Routine, Second Special Rate Award Routine, Prog Routine, and Free Spot Routine), and it describes them as ***alternative*** ways to award a privilege when the player wins on a star mark. EX1007, [0119], [0185]. Kido describes how these different processes handle wins on a star mark differently:

- Special Rate Routines: when a player wins on a star mark, no payout is made. Instead, a second game is executed during which all positions on the wheel have an increased payout. EX1007, Fig. 9

(B11, B12, B14), [0124], [0186], [0203]; *id.*, Fig. 11 (C12, C13), [0217].

- Prog Routine: when a player wins on a star mark, the player wins the standard roulette payout plus the entire progressive jackpot accumulated over all of the previous spins. EX1007, Fig. 12 (A10, A11, A12), [0230]-[0231].

L&W provides no explanation of how the steps of these routines could be combined to allow them to be used together. And neither does Kido. Instead, these processes are presented as mutually exclusive ways for determining Kido's "privilege."

Despite the fact that the Prog Routine is different from the Special Rate Award Routine, L&W improperly relies on the Special Rate Award Routine to argue that Kido discloses increased payouts when executing the Prog Routine. For example, based on [0186] where Kido describes the Special Rate Award Routine, L&W asserts that "When the ball lands in a position associated with a star mark, and a player has bet on that position, the player receives a privilege award, ***such as an increased payout***." Pet., 27-28 (citing [0186]). But in the paragraphs immediately after that, L&W relies entirely on the Prog Routine. Pet., 28-30. As another example, L&W again relies on the increased pay rate of the Special Rate Award Routine with respect to "determin[ing] a first payout," pointing to the "Star Bonus" shown in Figure 8 and the flow chart for the Special Rate Award Routine in Figure 9. Pet., 33 n.3. In the rest of that section, however, L&W relies on the

Prog Routine. Pet., 33-36. The features of the Special Rate Award Routines are not part of the Prog Routine. Kido does not disclose any process that combines the two routines, and L&W does not explain how the features it relied on could be combined. L&W improperly mixes and matches the features without any showing that those features could be mixed.

Thus, L&W has not set forth a proper anticipation argument.

B. L&W Has Failed to Show that Baron Anticipates or Renders Obvious Any Claim

In L&W's Ground 3, it relies on Baron as teaching all of the elements of the independent claims. As explained below, L&W has failed to establish a reasonable likelihood that Baron anticipates or renders obvious any claim.

1. Summary of Baron

Baron discloses a gaming system for providing a roulette game that allows players an opportunity to win a progressive jackpot. EX1008, [0001]. Baron discloses that its system spins three roulette wheels each time a game is played. *Id.*, [0028]. Each wheel is independent of the others. *Id.*, [0038]. An example of a table for Baron's game is below.

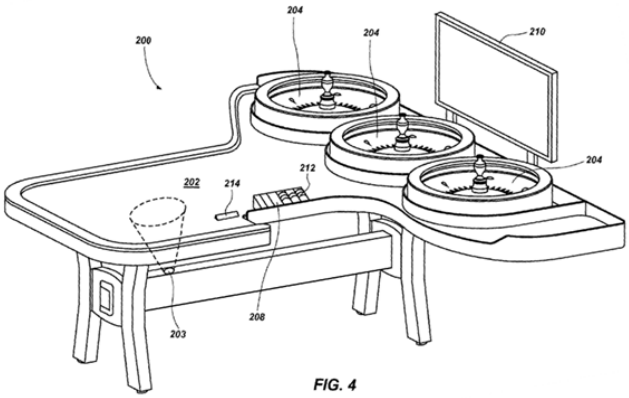

FIG. 4

A player can win if any of the three spins lands on the number the player wagered on. *Id.*, [0043]-[0044]. In some embodiments, if two or more spins land on the same number, players can win increased awards. [0045]. Baron discloses that the game can be played with physical wheels and an in-person croupier as shown in Figure 4. *Id.*, [0040], [0082]. It also discloses the game can be played using virtual roulette wheels and a virtual croupier. *Id.*, [0027], [0082], [0089].

The results of all three spins are presented to users, and all three are used to resolve the game outcome. An example is shown in the top of Figure 3, below (showing that for all three wheels, the ball landed on 24).

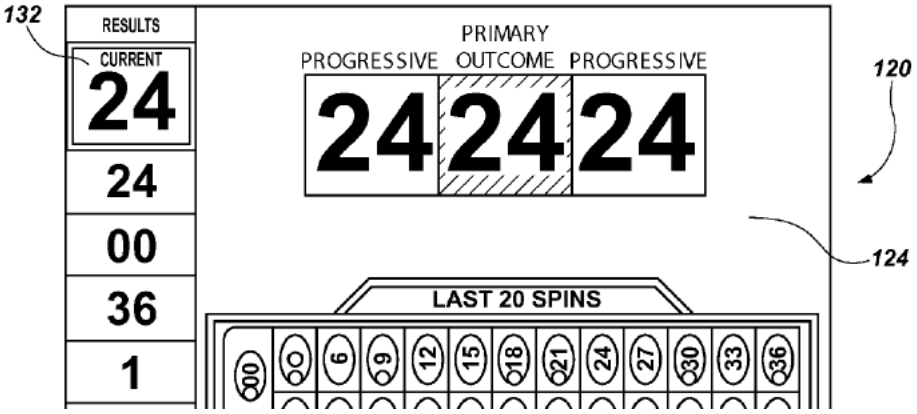

2. Baron's Game Requires Multiple Spins of Roulette Wheels and Does Not Disclose the "for a spin of the roulette wheel" Claim Elements

Baron's wagering game does not disclose any of the claim elements[7] that specify they pertain to "a spin of the roulette wheel." In contrast to the claims, Baron executes three spins, one on each of three roulette wheels, for each game played on its device. *See* EX1008, [0039] (a "plurality of roulette outcomes may be generated in a single round of the wagering game"); § IV.B, above. As a result, Baron does not meet multiple claim elements, as explained below.

a) L&W Failed to Show that Baron Discloses "Randomly Select a First Selected Position on the Roulette Wheel For the Spin of the Roulette Wheel" and "Determine that the Ball has Fallen in the First Position For the Spin of the Roulette Wheel"

L&W has not shown that Baron meets these two claim elements,[8] which are required to be performed during the same spin of a roulette wheel. Claim 1 of the '024 patent, in relevant part, requires a processor configured to:

---

[7] In the '024 patent, these correspond to L&W's elements 4-10 of claim 1, and elements 1-7 of claims 8 and 15.

[8] In the '024 patent, these correspond to L&W's elements 7 and 8 of claim 1, and elements 4 and 5 of claims 8 and 15.

> ***randomly select a first selected position*** on the roulette wheel for the spin of the roulette wheel ***prior to the ball falling into a position*** on the roulette wheel, wherein the first selected position is the same as the first position;
>
> * * *
>
> ***determine that the ball has fallen in the first position*** for the spin of the roulette wheel;

In these elements, the claim recites two distinct operations: selecting a first position then determining that the ball has fallen into that position for the same spin of the roulette wheel. L&W's argument fails for multiple reasons.

First, each of these claim elements specifies that the operation occur "for the spin of the roulette wheel." Baron cannot meet that limitation because Baron's game requires three spins of a roulette wheel: one for each of its three wheels. Although Baron discloses its system may use physical roulette wheels or virtual roulette wheels, EX1008, [0027], that does not change the fact that the game requires spinning three roulette wheels. L&W's argument relies on rewriting the claims to replace "***the spin*** of the roulette wheel" with "in a single ***round***." As explained in § IV.B, above, L&W's implicit construction of "a spin of the roulette wheel" to cover three spins is improper and unsupported.

Second, L&W has failed to specify what it is relying on in Baron to meet these elements. To meet the "randomly select a first selected position," L&W

points to all three spins of Baron's three roulette wheels. L&W's explanation for how Baron meets this element is that:

> Figure 3 of Baron… shows one primary outcome (24) and two ancillary outcomes (also 24), all three of which are for a position on the roulette wheel (24)… Baron discloses 'randomly select[ing] a first selected position' (i.e., randomly generated roulette outcome) 'on the roulette wheel.'"

Pet., 62-63. L&W further alleges that the roulette outcomes can be generated using physical roulette wheels or by a processor providing virtual roulette wheels. *Id.*; EX1008, [0027] (device can use "virtual roulette wheels"). However generated, L&W does not identify which of the three roulette outcomes allegedly corresponds to the operation of "randomly select a first selected position." Is the position selected by one of the three wheels, by all three wheels, or by some combination of the three wheels? L&W does not say.

Nor does L&W explain how a ball landing in an "outcome position," EX1008, [0039], meets "randomly select a first selected position." Baron discloses that each of the three roulette wheels, whether physical or virtual, generates a "roulette outcome." EX1008, [0027], [0039], [0088]; EX1003, ¶253. And a player can win if any of the three roulette wheel land on the number he bet on. EX1008, [0043], [0045], [0062]; EX1003, ¶267. Baron does not disclose that any

of the roulette wheels "select" a position for an increased payout, and L&W does not identify any such disclosure. It is unclear what L&W is trying to rely on.

To meet "determine that the ball has fallen in the first position," L&W points to the same three spins of the three roulette wheels. Once again, L&W fails to identify which one or ones of the three roulette outcomes correspond to the ball falling into the first position. Pet., 68-69. It simply asserts that "determining the ball has fallen into a pocket on the wheel is a prerequisite to determining that a player has placed a winning bet." Pet., 69. But all three wheels have a ball fall into a pocket. And in Baron's system, a player wins if ***any*** of the three roulette wheels land on the number the player wagered on. EX1008, [0043]-[0045]. Thus, it cannot be determined whether L&W is relying on the ball falling into position on one, two, or all of the wheels as meeting this element.

A petition must specify where each element of the claim is found in the prior art relied upon. 37 C.F.R. 42.104(b)(4). L&W failed to do that, leaving Evolution and the Board to speculate about what L&W intended to map to each claim element. Its failure to identify what in the prior art corresponds to the claim is, by itself, basis for denial.

Third, L&W fails to explain how Baron selects the first selected position "prior to the ball falling into a position on the roulette wheel." According to L&W, Baron selects the position ***when*** a ball falls into a position on a wheel, and ***not***

prior to it. Because all three of Baron's roulette wheels generate a "roulette outcome" by a ball falling into a position on the roulette wheel, EX1008, [0039], none can select a position "prior to a ball falling into an outcome position" on a roulette wheel.

Fourth, during prosecution, Evolution amended the claims to distinguish them from prior art that selects a first position based on a "number corresponding to a position on a roulette wheel into which a ball drops." EX1006, 079-080. L&W's assertion that a ball dropping into position on a roulette wheel meets the step of "randomly select[ing] a first position on the roulette wheel … prior to the ball falling into a position on the roulette wheel," is inconsistent with the plain claim language and the prosecution history.

Finally, L&W argues that it would have been obvious to modify Baron so that it "randomly selects a first selected position" prior to the ball falling into position on the wheel. This would have been obvious according to L&W because Baron describes "generating one or more roulette outcomes… at the close of wagering or at the beginning of a new round of play (e.g., after a timer has expired)" with respect to Figure 7. EX1008, [0088]; Pet., 63. But Baron is simply listing the timing of when its device can generate roulette outcomes. Nothing changes the fact that each of Baron's roulette outcome is generated by a ball falling into a position on a roulette wheel. L&W fails to explain how variations in when

each of the three wheels is spun could result in a modified system that meets the claim language.

b) Baron Does Not Disclose "Determine a First Payout for First Position and a Second Payout for the Second Position for the Spin of the Roulette Wheel, Wherein the First Payout Is Higher Than the Second Payout"

Baron does not disclose "determin[ing] a first payout for first position and a second payout for the second position for the spin of the roulette wheel, wherein the first payout is higher than the second payout."

L&W argues that Baron shows a first payout higher than a second payout because a player can win more if multiple roulette wheels land on the number the player wagered on. Pet., 66 (citing EX1008, [0045]). L&W's argument relies on rewriting the claims to replace "***the spin*** of the roulette wheel" with "in a single ***round***." As explained in § IV.B, above, L&W's implicit construction of "a spin of the roulette wheel" to cover three spins is improper and unsupported.

Baron does not disclose this claim element, when properly interpreted. For any one spin of a roulette wheel, Baron's payouts are the same. If the player wagers on a number, and the ball lands on that number on one roulette wheel, the player wins a payout of 7:1. EX1008, [0045]. The payout does not vary depending on which number the player wagered on. For any one spin of one roulette wheel, the payout for a first position on that wheel and a second position

on that wheel is the same. Thus, Baron does not determine a first payout and second payout where the first is higher than the second.

Baron discloses that the only way an increased payout can be won is based on the results from ***two spins*** of two roulette wheels. EX1008, [0045]. Two roulette wheels must have their ball land on the number the player wagered on for that player to win a payout of 100:1. Thus, such an increased payout is not available for "a spin of the roulette wheel." There must be multiple spins of two wheels, which is different than the claims. *See* § IV.B., above.

Baron also discloses that, if all three wheels land on the same number, the player can win a progressive jackpot. EX1008, [0045]. Winning the progressive jackpot requires ***three spins*** of three roulette wheels, not "a spin of the roulette wheel." *See* § IV.B., above. In addition, as explained in § IV.A., above, a progressive jackpot is not a "payout" within the meaning of the claims.

3. L&W's Anticipation Argument Is Improper

While L&W argues that Baron "anticipates and renders obvious" the challenged claims, L&W has not provided a proper anticipation analysis. For one thing, L&W does not clearly identify where Baron discloses an element versus where it renders an element obviousness. Instead, L&W lumps anticipation and obviousness together in one section, obscuring its actual arguments. More problematically, L&W proposes multiple modifications to Baron's system. For

example, L&W proposes adding a sensor to Baron, Pet., 61, and modifying the timing of when certain wheels are spun, *id.*, 64. Its expert proposes further modifications to Baron by adding various features from other patents that allegedly are incorporated by reference. EX1003, ¶¶236, 240, 247. Thus, L&W has not proposed a proper basis for anticipation, and its Ground 3 must be limited to obviousness.

C. Substantial Objective Indicia Show the Claims Are Non-Obvious

L&W's obviousness arguments also fail because there is overwhelming objective evidence of non-obviousness for Evolution's claimed invention. This includes extensive industry praise, including from L&W itself, L&W's copying of Lightning Roulette, and commercial success. As the Federal Circuit "has consistently held":

> [O]bjective indicia may often be ***the most probative and cogent evidence*** of nonobviousness. Objective indicia are ***essential safe-guards that protect against hindsight bias***. The objective indicia analysis is, therefore, a fundamental part of the overall § 103 obviousness inquiry. As a result, the Board must consider all such evidence of objective indicia and determine the weight to give it en route to a determination of obviousness.

Liqwd, Inc. v. L'Oreal USA, Inc., 941 F.3d 1133, 1136-37 (Fed. Cir. 2019) (citations and quotation marks omitted).

L&W was indisputably aware of this objective evidence when it filed the Petition, yet did not address it. Evolution included this same evidence in its district court complaint, which was filed on May 28, 2024. And Evolution explicitly informed L&W that this evidence of objective indicia showed the claims were non-obvious in Evolution's interrogatory response served on October 25, 2024. EX1010, 8; Rog 4 Response. L&W was aware of the objective evidence, and it is appropriate for the Board to consider this evidence to evaluate whether to deny institution. *See Stryker v. KFx Med.*, IPR2019-00817, Paper 10 (Sept. 16, 2019) ("Petitioner's failure to address the known evidence of secondary considerations further weighs in favor of denying institution"); *Omron Oilfield & Marine Inc. v. MD/TOTCO*, IPR2013-00265 (Paper 11) (Oct. 31, 2013).

1. Industry Praise: Lightning Roulette Has Received Extensive Industry Praise

Evolution's Lightning Roulette game was released in 2018, and the industry immediately recognized the product's innovation. In 2018, and even years later in 2022, Lightning Roulette received multiple industry awards, including:

- "Product Innovation of the Year" at the 2018 Global Gaming Awards, which called Lightning Roulette "the most revolutionary product in the last 12 months." EX2007. The Product Innovation of the Year award is "one of the most prestigious awards to win." EX2038.
- "Product Innovation of the Year" award at the 2018 Global Gaming Expo (G2E), beating nine other shortlisted candidates and "prov[ing]

that its sophisticated software contributions to the industry in both sectors (land-based, as well as digital) have been unsurpassed in the past 12 months." EX2038.

- Game of the Year at the EGR Operator Awards in 2018 and recognized as the game "making the biggest annual impact." The EGR Operator Awards are considered the "Oscars of the egaming sector" and reward operators for setting the [industry] standard." The Game of the Year winner is decided by votes by peer operators who were shortlisted for one of the awards.
- 2022 Game of the Year at the American Gambling Awards shortly after being released in the U.S. EX2009, EX2010.

In addition to the industry at large, L&W itself has praised Lightning Roulette for its "unique[ness]." In a May 2021 press release issued shortly after Evolution and L&W inked their partnership, L&W's then Senior Vice President of Global Systems and Table Games praised Lightning Roulette, stating:

> We have watched ***Lightning Roulette's phenomenal success*** in a live-dealer, online format and cannot wait to make it available on gaming floors of land-based casinos across North America and around the world. With its trademark lightning strikes and ***big-win multipliers***, Lightning Roulette is sure to be one of the most visually engaging and entertaining live table games ever offered. It provides ***a truly unique roulette experience*** for players and we are confident that in its land-based form, scheduled for go-live in 2022, it will be an absolute star attraction.

EX2008; EX2039.

2. Copying: L&W Copied Lightning Roulette

After entering into an agreement with Evolution to develop a table version of Lightning Roulette that could be played in-person and that granted L&W an exclusive license to the ’024 patent, L&W terminated that agreement and instead launched a copycat version of Lightning Roulette that L&W called RouletteX. EX1015, ¶¶17-23. L&W indisputably knew about Lightning Roulette and how the game was operated, not only due to Lightning Roulette’s immense popularity but also due to its agreement with Evolution. L&W copied Lightning Roulette for RouletteX. Just like Lightning Roulette and the ’024 patent claims, L&W’s RouletteX randomly adds multipliers to several roulette numbers each time the roulette wheel is spun such that, if one is hit, players are awarded various increased payouts. L&W has described the game as follows:

Description

Welcome to Roulette X, an exhilarating, supercharged bonus roulette experience that has already become a renowned brand in land-based casinos worldwide! A definite crowd-pleaser, Roulette X adds an exciting twist to the classic casino game. Players have the power to choose their own volatility or bonus level, unlocking the potential to win an incredible 1000x! With each spin of the wheel, the excitement builds as up to five numbers are randomly selected to bear multipliers of 50x, 100x, 250x, or an astounding 1000x - Which level will you choose?

An example of a user interface for RouletteX that was presented at the G2E industry event is below. Four numbers were selected as Lucky Numbers—three

were assigned increased payouts of 50X, and one was assigned an increased payout of 500X.

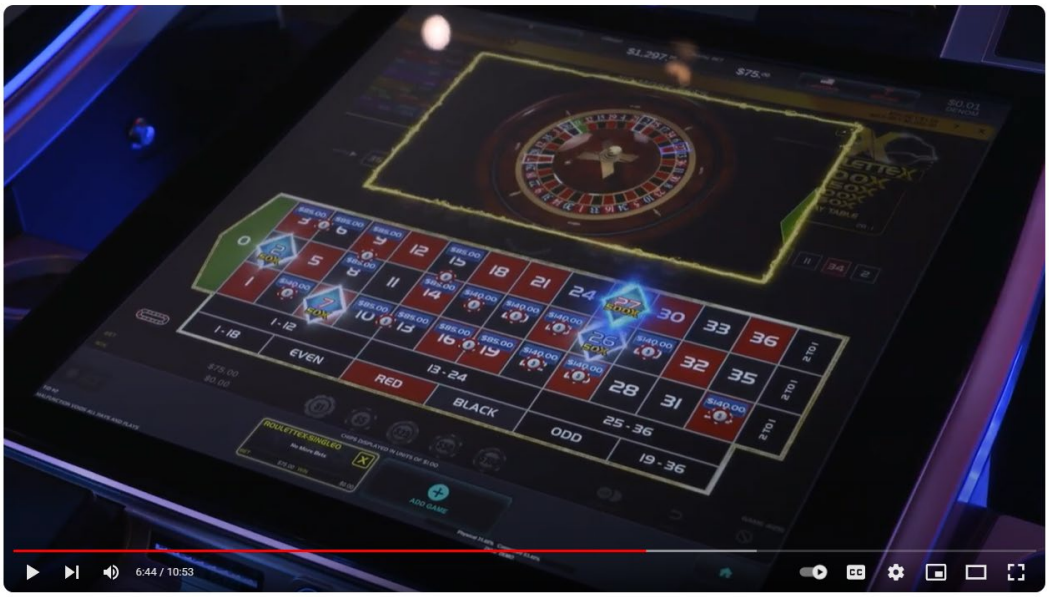

G2E 2023 Light & Wonder - At-Booth Product Demos

That game is a copy of Lightning Roulette and infringes the ’024 patent. EX1015, ¶¶ 42-118. L&W’s copying of Lightning Roulette shows that the ’024 patent’s claims are non-obvious.

3. Commercial Success and Licensing: L&W Recognized Lightning Roulette’s Success and Licensed the ’024 Patent

The ’024 patent has met with commercial success, as shown even by L&W’s own statements and actions. L&W’s former Senior Vice President of Global Systems and Table Games admitted that Lightning Roulette was a “phenomenal success.” EX2008.

In addition, L&W took a license to the ’024 and ’014 patents and agreed to pay a royalty on products developed under the license. EX2014, 4, 6, 29. That

Evolution licensed the ’024 patent to L&W shows that the patent was commercially successful. *Ancora Techs., Inc. v. Roku, Inc.*, 140 F.4th 1351, 1362 (Fed. Cir. 2025) (explaining that “[a]ctual licenses to the patented technology are highly probative” and “do not require a nexus with respect to the specific claims at issue” because “they are, by their nature, directly tied to the patented technology”).

4. Lightning Roulette Has a Nexus with the Claims

Evolution’s Lightning Roulette product practices and embodies claims of the ’024 patent. For example, images of the Lightning Roulette game appear as Figures 3 to 5 of the patent. And, as shown in the chart below, Lightning Roulette practices at least claims 1, 4, 5, and 7 of the ’024 patent. Lightning Roulette also practices the parallel method and computer-readable medium claims (8, 11, 12, 14 and 15, 17, 18, 20) for the same reasons. *See* EX1024; EX1025; Pet., 8-9.

For objective indicia about a commercial product, there is a rebuttable presumption of nexus with the claims if the commercial product “embodies the claimed features, and is co-extensive with them” *Henny Penny Corp. v. Frymaster LLC*, 938 F.3d 1324, 1332 (Fed. Cir. 2019) (citation omitted). Here, Lightning Roulette embodies the claimed features and is coextensive with them. Thus, there is a presumption of nexus between Evolution’s Lightning Roulette and the claimed invention.

Claim Element	**Lightning Roulette**

1[pre] A system for wagering, comprising:	"Lightning Roulette is a unique, ground-breaking extended Roulette game that combines Live Casino with a high-payout RNG (Random Number Generator) element to revolutionise your Live Casino." EX2027, 1.
1[a] a roulette wheel;	"All the familiar elements of our world-class Live Roulette are here — ***the live wheel***, the live dealer, the full line-up of Roulette bets." EX2036. 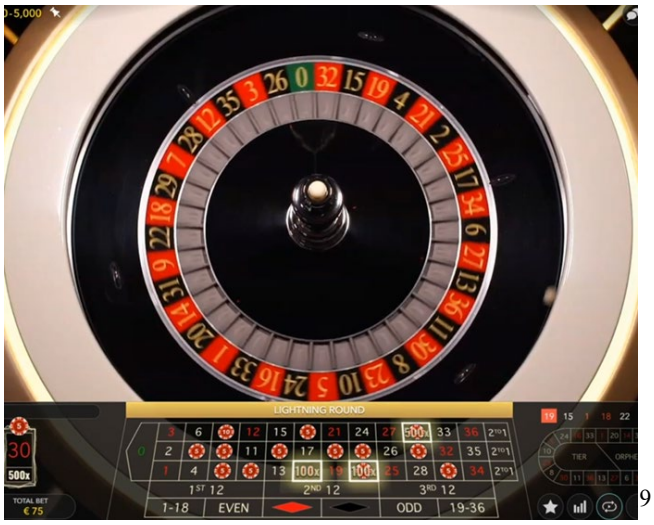 [9]

[9] *See* https://games.evolution.com/wp-content/uploads/2023/01/Lightning-Roulette-Big-Win-Compilation.mp4

1[b] a ball configured to be used in the roulette wheel;	See 1[a], above.
1[c] a hardware processor configured to:	The game is run by a server (which includes a processor), and is broadcast to player devices. 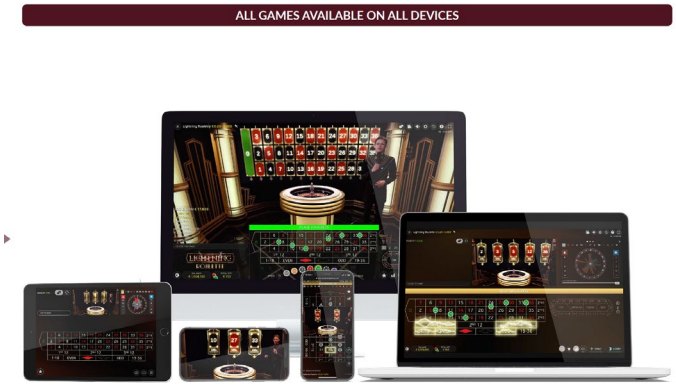 EX2027, 9.
1[d] receive first bet information for a first bet from a first player device of a first player on a spin of the roulette wheel, the first bet information corresponding to at least a first position on the roulette wheel;	The game has a user interface where each player can place bets from their own device (e.g., computer), including straight up bets on individual numbers. "***After all player bets are accepted***, the amount of Lucky Numbers (one to five), the Lucky Numbers themselves and the amounts of the Lucky Payouts are randomly generated." EX2036. The game receives bet information from every player. For example, the figure below shows that all winners are announced as well as their winnings.

	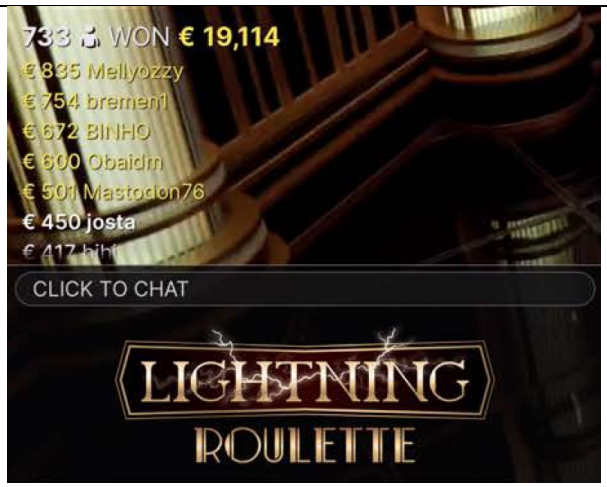 EX2027, 3.
1[e] receive second bet information for a second bet from a second player device of a second player on the spin of the roulette wheel, the second bet information corresponding to at least a second position on the roulette wheel that is different from the first position;	See 1[d], above. "Thanks to massive multiplayer scalability, Lightning Roulette can be played by ***a virtually unlimited number of concurrent players***." EX2036
1[f] determine that the roulette wheel and the ball have been spun for the spin of the roulette wheel;	"The ball is spun ***automatically*** by an Auto Roulette wheel and the game presenter will pull a lever to initiate the generating of Lucky Numbers after betting time has expired." EX2027, 3.
1[g] randomly select a first selected position on the roulette wheel for the spin of the roulette wheel prior to the ball falling into a position on the roulette wheel, wherein the first selected position is the same as the first position;	"In every game round, ***between one and five Lucky Numbers are generated at random*** and struck by lightning. At the same time, each of the generated Lucky Numbers has a random multiplier applied to it: 50x, 100x, 200x, 300x, 400x or 500x. Naturally, this creates considerable extra suspense and excitement as each round spins by." EX2027, 2. "Our unique Lightning Roulette is like no other Roulette game. Not only is it visually stunning, it

	also adds RNG Lucky Number wins to every game round." EX2036 As shown in 1[i], below, the first selected position can be the same as the first position the first player wagered on. For example, in the image below, the player placed a $5 wager on 30, and 30 was selected as a Lucky Number with a 500x payout. The ball (on the right side of the image) is still spinning and has not fallen into a position yet.
1[h] determine a first payout for first position and a second payout for the second position for the spin of the roulette wheel, wherein the first payout is higher than the second payout;	The game determines payouts for multiple positions on the roulette wheel. For example, the image below shows that 2 has a 200x payout; 3, 5, and 20 have a 100x payout; 14 has a 50x payout, and all other numbers have a 30x payout. 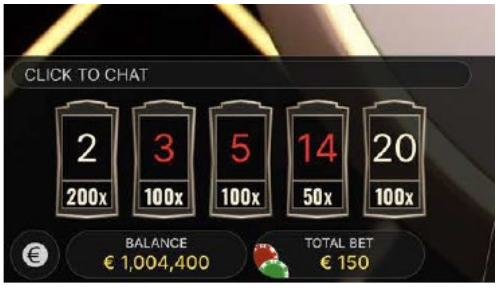 EX2027, 4. As another example, the image below shows that 16 and 22 have a 100x payout; 30 has a 500x payout, and all other numbers have a 30x payout.

1[i] determine that the ball has fallen in the first position for the spin of the roulette wheel; and	Lightning Roulette determines which position the ball landed on, and can determine whether that position was selected as a Lucky Number. EX2027, 4.

1[j] indicating that the first player is to be paid at the first payout for the spin of the roulette wheel.	See 1[i], above
4. The system of claim 1, further comprising a display adjacent to the roulette wheel that indicates the first selected position.	A display for presenting the Lucky Numbers to players is adjacent to the roulette wheel, as shown below.

	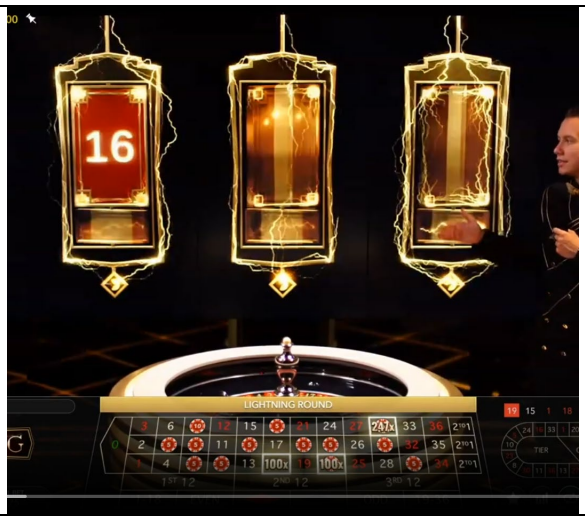
5. The system of claim 4, wherein the hardware processor is further configured to cause a lightning visual effect to be presented when in connection with indicating the first selected position.	"In every game round, ***between one and five Lucky Numbers are generated*** at random and ***struck by lightning***." EX2027, 2. Lightning can be seen in the image below. 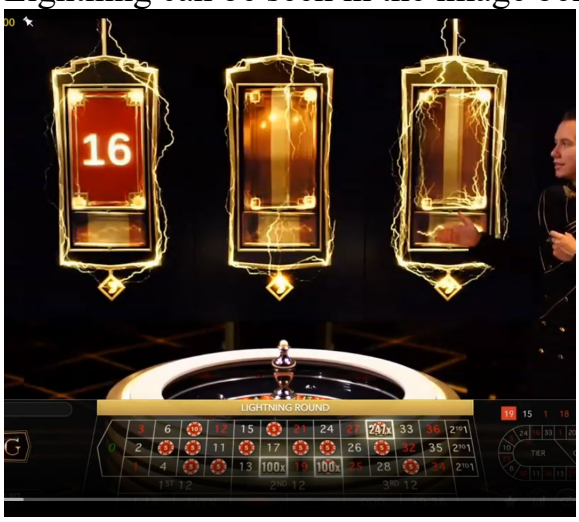
7[pre] The system of claim 1, wherein the hardware processor is further configured to:	See claim 1[c], above.
7[a] randomly select a second selected position on the roulette wheel; and	"In every game round, ***between one and five Lucky Numbers are generated at random*** and struck by lightning. At the same time, each of the generated Lucky Numbers has a random multiplier applied to it: 50x, 100x, 200x, 300x, 400x or 500x. Naturally,

	this creates considerable extra suspense and excitement as each round spins by." EX2027, 2.
7[b] determine a payout for the second selected position that is different than the payout for the first position.	The game determines payouts for multiple positions on the roulette wheel. For example, the image below shows that 2 has a 200x payout; 3, 5, and 20 have a 100x payout; 14 has a 50x payout, and all other numbers have a 30x payout. 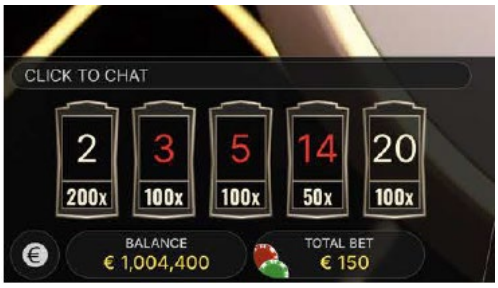 EX2027, 4. As another example, the image below shows that 16 and 22 have a 100x payout; 30 has a 500x payout, and all other numbers have a 30x payout.

Lightning Roulette has a nexus with all three of the patents in this family: the '024 patent, '014 patent, and '371 patent. "Multiple patents can share a presumption of nexus with the same product," which is commonly the case where, as here, the patents are in the same family. *Fox Factory, Inc. v. SRAM, LLC*, 944

F.3d 1366, 1377 (Fed. Cir. 2019); (collecting cases); *WBIP, LLC v. Kohler Co.*, 829 F.3d 1317, 1324-25 (Fed. Cir. 2016).

VI. Conclusion

Accordingly, Evolution requests that the Board deny the Petition.

Dated: September 24, 2025

Respectfully submitted,

/Thomas A. Broughan III/

Thomas A. Broughan III
Reg. No. 66,001
SIDLEY AUSTIN LLP
1501 K Street NW
Washington, DC 20005
tbroughan@sidley.com
(202) 736-8314

CERTIFICATE OF COMPLIANCE

I hereby certify that this brief complies with the type-volume limitations of 37 C.F.R. §42.24, because it contains 11,256 words (as determined by the Microsoft Word word-processing system used to prepare the brief).

Dated: September 24, 2025

Respectfully submitted,

/Thomas A. Broughan III/
Thomas A. Broughan III
Reg. No. 66,001
SIDLEY AUSTIN LLP
1501 K Street NW
Washington, DC 20005

CERTIFICATE OF SERVICE

I hereby certify that on this 24th day of September, 2025, copies of this Patent Owner's Preliminary Response have been served on the following counsel of record for Petitioner Light & Wonder, Inc.:

Joshua R. Nightingale
Reg. No. 67,865
JONES DAY
500 Grant Street, Suite 4500
Pittsburgh, PA 15219
(412) 394-7950
jrnightingale@jonesday.com

Jennifer D. Bennett
Reg. No. 56,629
JONES DAY
555 California Street, 26th Floor
San Francisco, CA 94104
(415) 626-3939
jenniferbennett@jonesday.com

Dated: September 24, 2025

Respectfully submitted,

/Thomas A. Broughan III/

Thomas A. Broughan III
SIDLEY AUSTIN LLP
1501 K Street NW
Washington, DC 20005