US007579227B2

(12) **United States Patent**
Hirase et al.

(10) **Patent No.: US 7,579,227 B2**
(45) **Date of Patent: Aug. 25, 2009**

(54) **SEMICONDUCTOR DEVICE AND METHOD FOR FABRICATING THE SAME**

(75) Inventors: **Junji Hirase**, Osaka (JP); **Akio Sebe**, Osaka (JP); **Naoki Kotani**, Hyogo (JP); **Gen Okazaki**, Hyogo (JP); **Kazuhiko Aida**, Chiba (JP); **Shinji Takeoka**, Osaka (JP)

(73) Assignee: **Panasonic Corporation**, Osaka (JP)

(*) Notice: Subject to any disclaimer, the term of this patent is extended or adjusted under 35 U.S.C. 154(b) by 214 days.

(21) Appl. No.: **11/491,260**

(22) Filed: **Jul. 24, 2006**

(65) **Prior Publication Data**

US 2007/0032007 A1 Feb. 8, 2007

(30) **Foreign Application Priority Data**

Aug. 5, 2005 (JP) 2005-227457

(51) **Int. Cl.**

H01L 21/336	(2006.01)
H01L 21/8234	(2006.01)
H01L 29/76	(2006.01)
H01L 29/94	(2006.01)
H01L 27/108	(2006.01)

(52) **U.S. Cl.** **438/197**; 257/295; 257/310; 257/410

(58) **Field of Classification Search** 257/295–296, 257/310, 324, 410, 411

See application file for complete search history.

(56) **References Cited**

U.S. PATENT DOCUMENTS

6,642,071	B2 *	11/2003	Cheng	438/22
6,929,992	B1 *	8/2005	Djomehri et al.	438/199
6,992,358	B2 *	1/2006	Hieda et al.	257/407
2003/0022422	A1	1/2003	Torii et al.	
2004/0004234	A1	1/2004	Yagishita et al.	
2004/0129997	A1	7/2004	Morifuji	
2005/0121733	A1	6/2005	Chen et al.	
2005/0127436	A1	6/2005	Henson et al.	
2006/0121740	A1	6/2006	Sakai et al.	

FOREIGN PATENT DOCUMENTS

CN 1610129 A 4/2005

(Continued)

OTHER PUBLICATIONS

Watanabe, Ken, Partial English Translation of "HfSiON-CMOS technology for achieving high performance and high reliability," Semi Forum Japan, 2005, IT System & ULSI Technology.

(Continued)

Primary Examiner—Chuong A. Luu
(74) *Attorney, Agent, or Firm*—McDermott Will & Emery LLP

(57) **ABSTRACT**

A semiconductor device includes: a high dielectric constant gate insulating film formed on an active region in a substrate; a gate electrode formed on the high dielectric constant gate insulating film; and an insulating sidewall formed on each side surface of the gate electrode. The high dielectric constant gate insulating film is continuously formed so as to extend from under the gate electrode to under the insulating sidewall. At least part of the high dielectric constant gate insulating film located under the insulating sidewall has a smaller thickness than a thickness of part of the high dielectric constant gate insulating film located under the gate electrode.

15 Claims, 11 Drawing Sheets

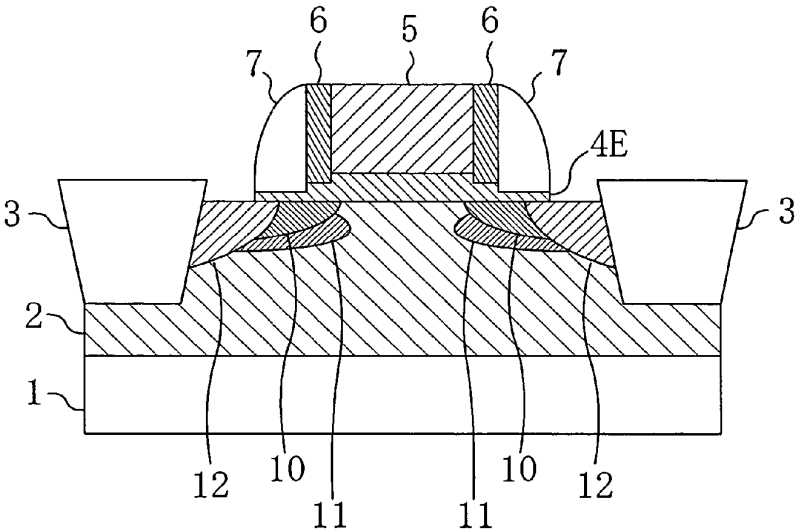

UMC1001
UMC v. AICP

FOREIGN PATENT DOCUMENTS

JP	2004-356576	12/2004
JP	2005-064190	3/2005

OTHER PUBLICATIONS

Hori, Takashi, "¼-μm LATID (LArge-Tilt-angle Implanted Drain) Technology For 3.3-V Operation", CH2637-7/89/0000-0777 1989 IEEE, IEDM 89-777-780-IEDM 89.

Sayama, et al., H.,, "80nm CMOSFET Technology Using Double Offset-Implanted Source/Drain Extension and Low Temperature SiN Process", IEDM 2000, IEDM 00-239-242-IEDM 00.

Chinese Office Action, with English Translation, issued in Chinese Patent Application No. CN 200610093872.2, dated Mar. 20, 2009.

U.S. Office Action issued in U.S. Appl. No. 11/543,865, filed Nov. 12, 2008.

* cited by examiner

FIG. 1

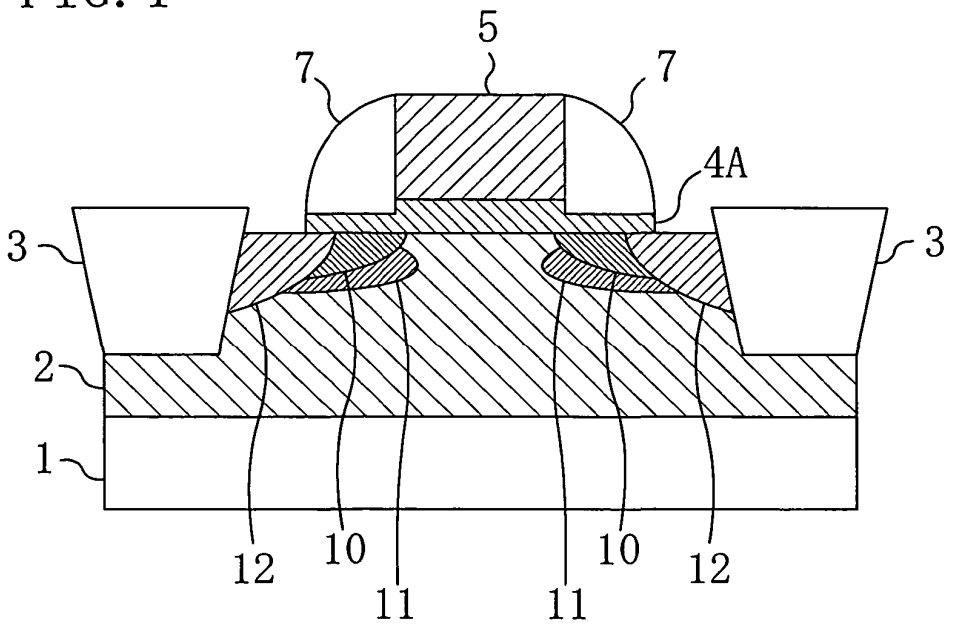

FIG. 2

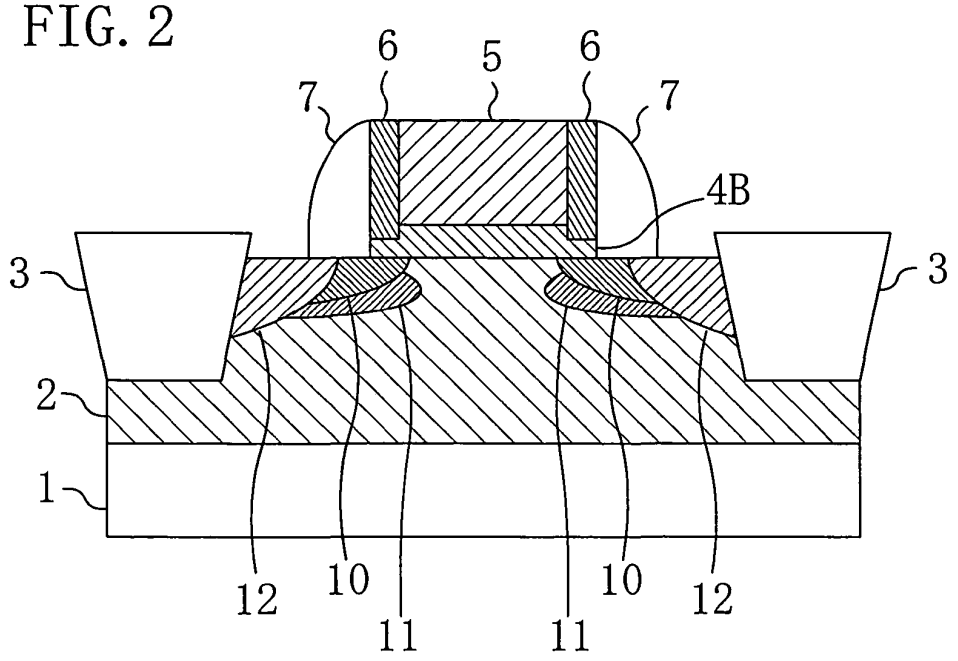

FIG. 3

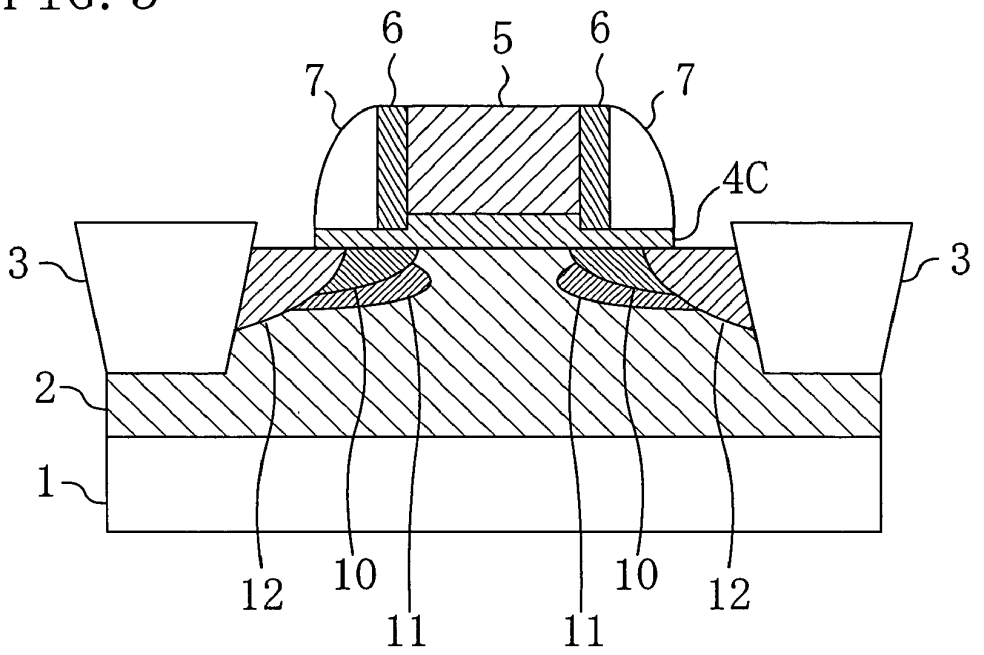

FIG. 4

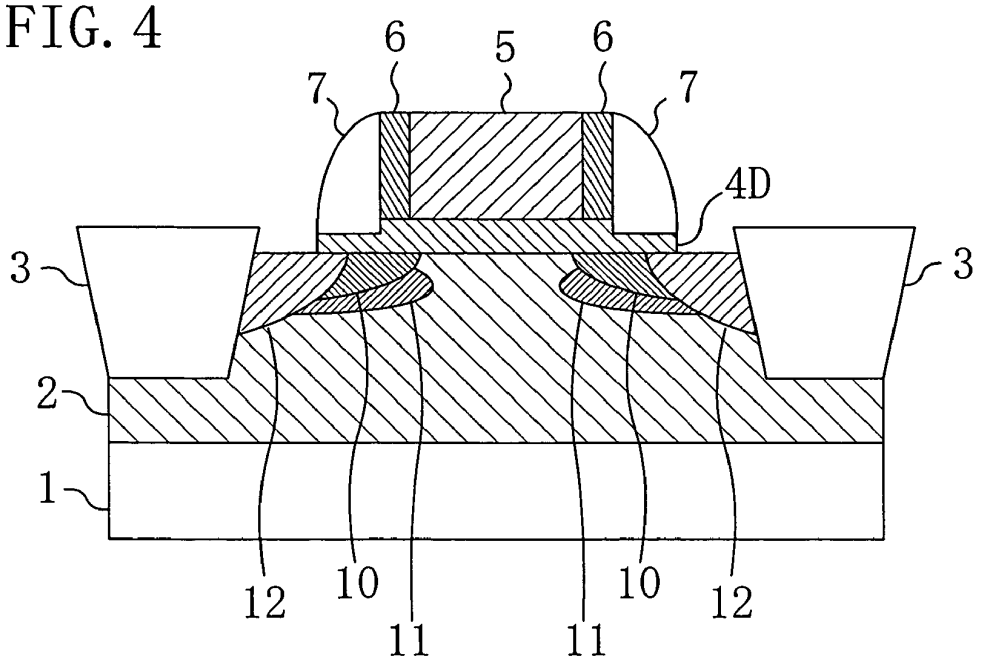

FIG. 5

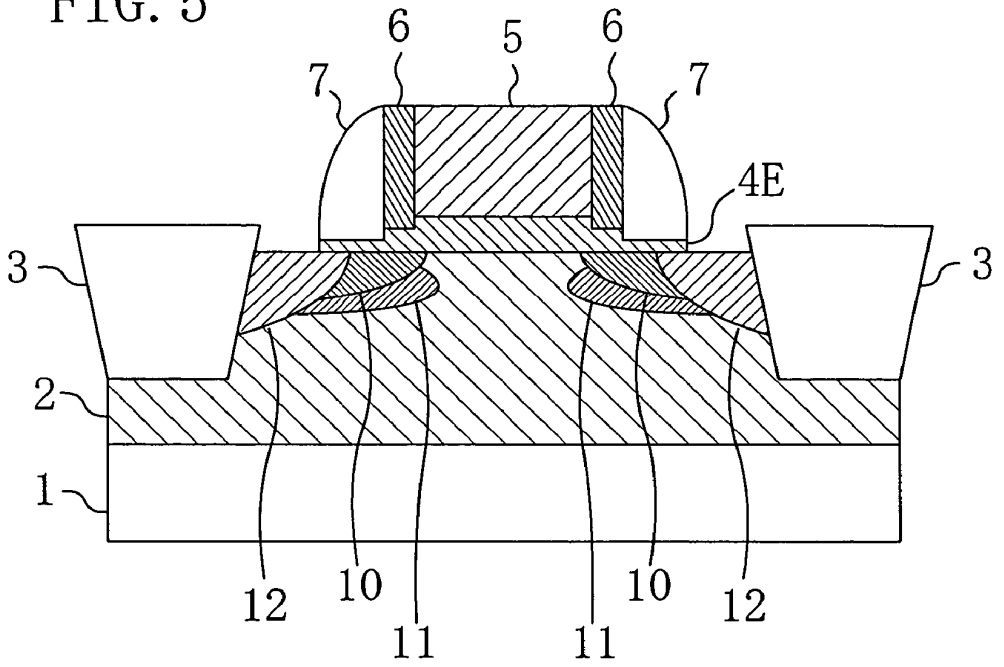

FIG. 6

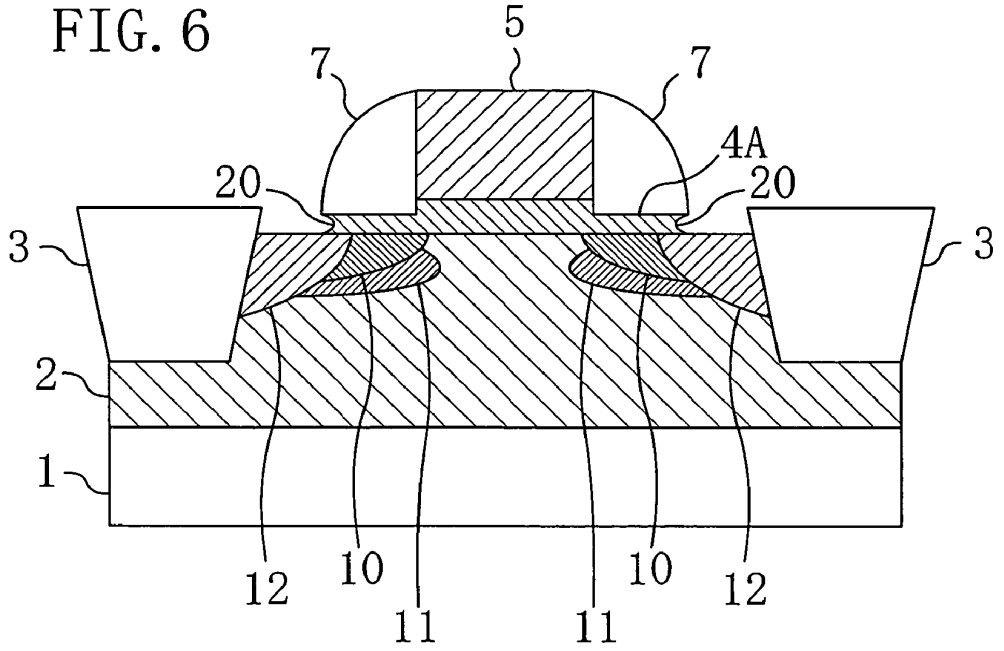

FIG. 7

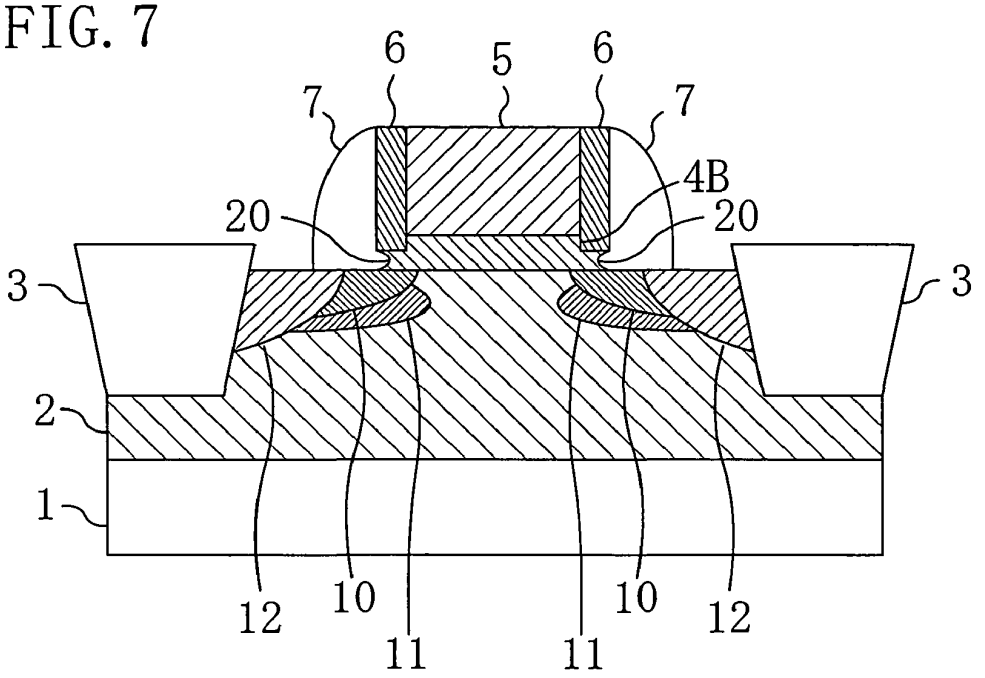
6
5
6
7
7
4B
20
20
3
3
2
1
12
10
11
11
10
12

FIG. 8

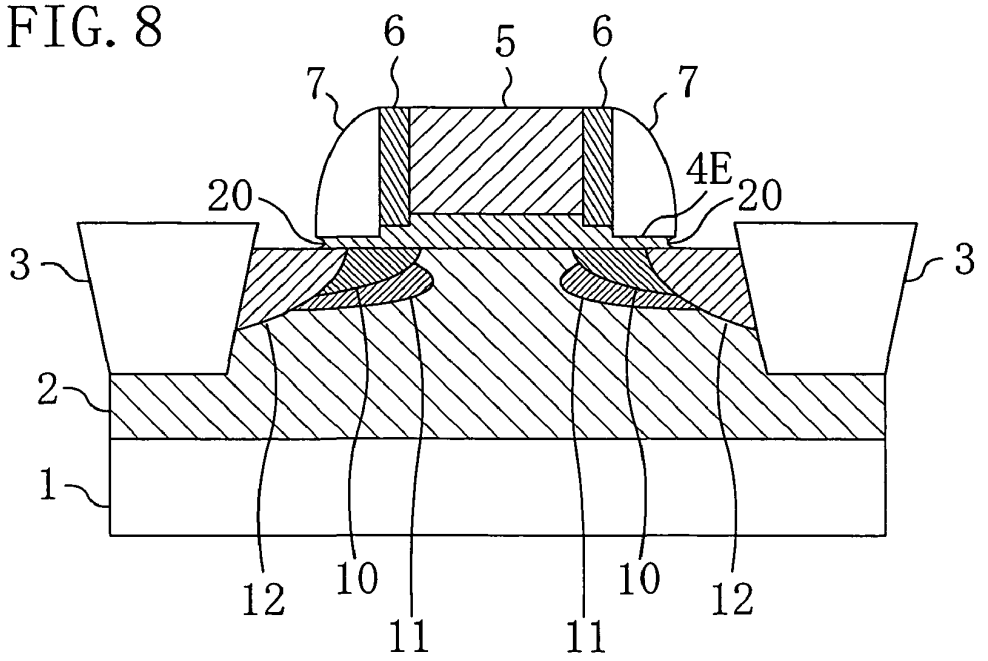
6
5
6
7
7
4E
20
20
3
3
2
1
12
10
11
11
10
12

FIG. 9

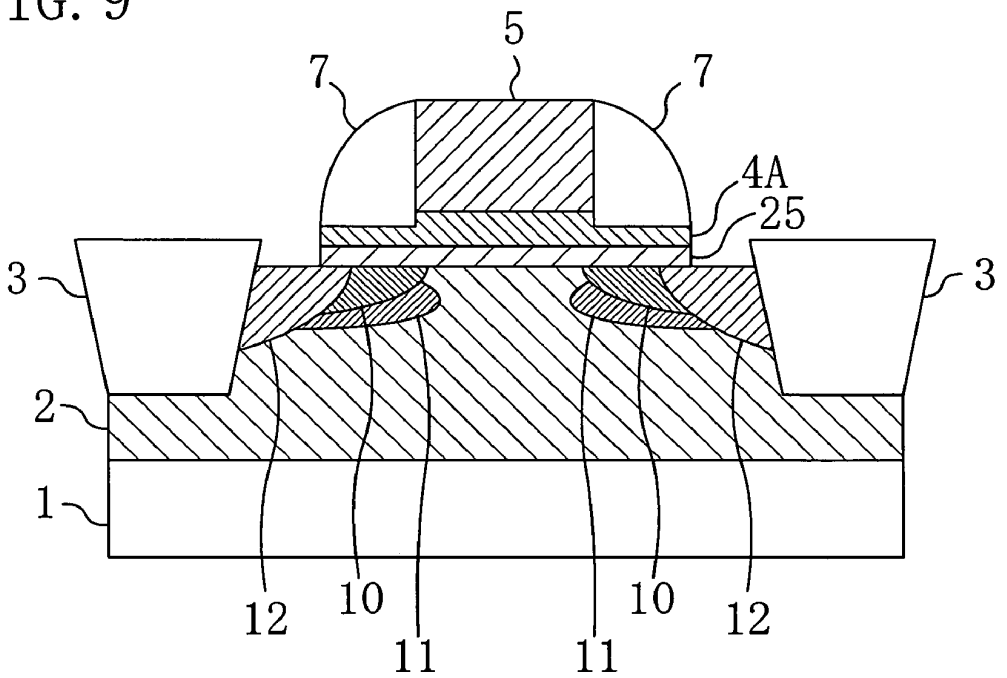
5
7
7
4A
25
3
3
2
1
12
10
11
11
10
12

FIG. 10

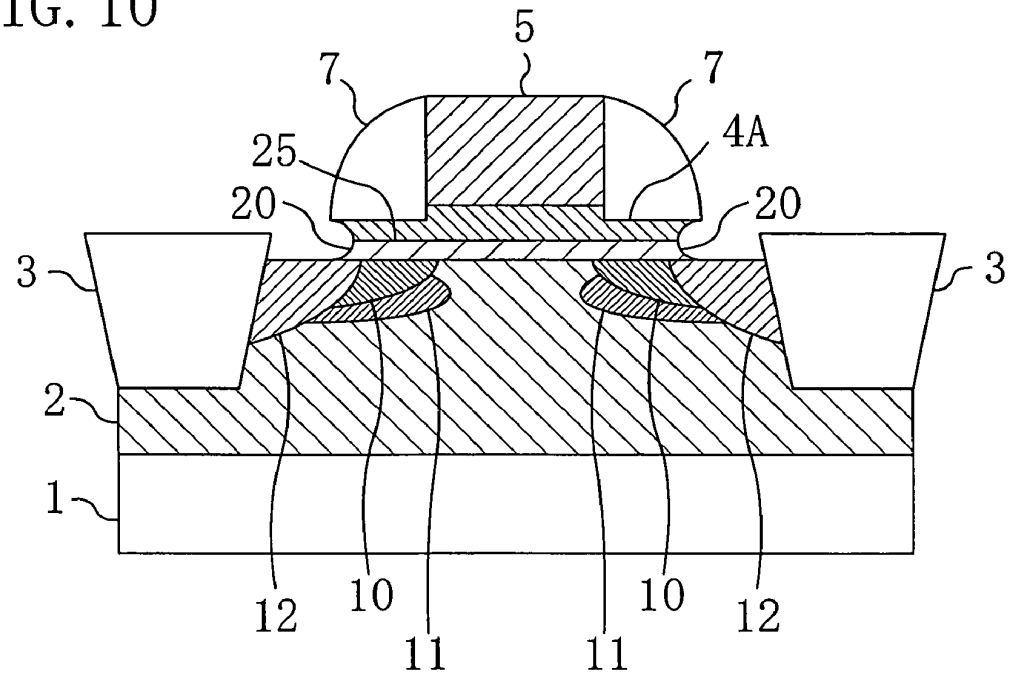
5
7
7
25
4A
20
20
3
3
2
1
12
10
11
11
10
12

FIG. 11A

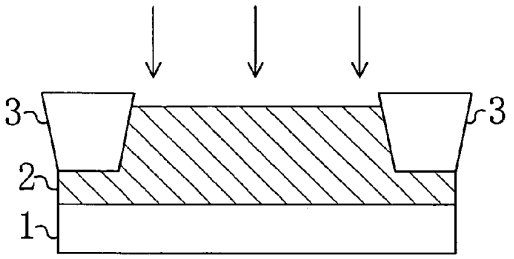

FIG. 11D

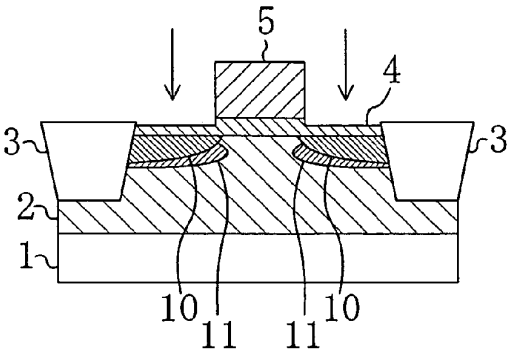

FIG. 11B

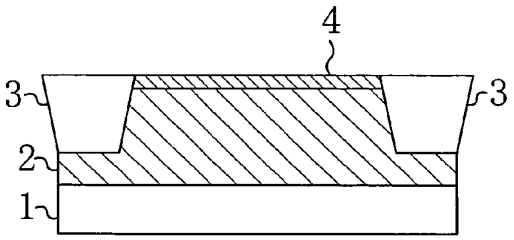

FIG. 11E

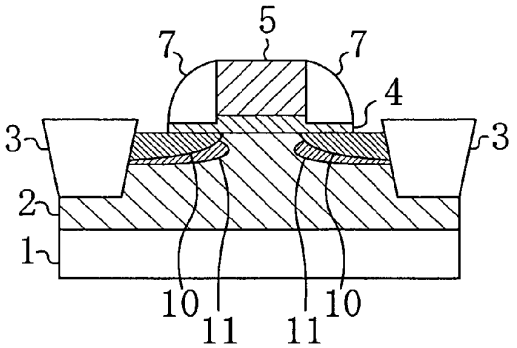

FIG. 11C

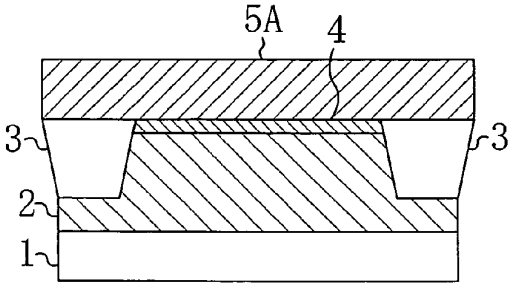

FIG. 11F

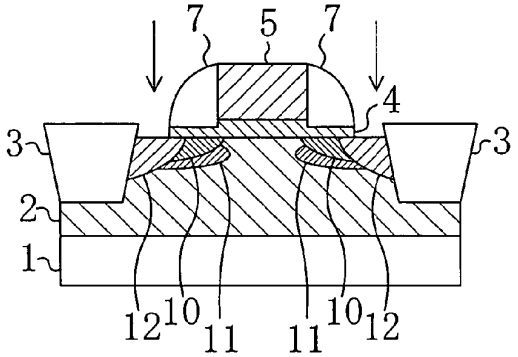

FIG. 12A

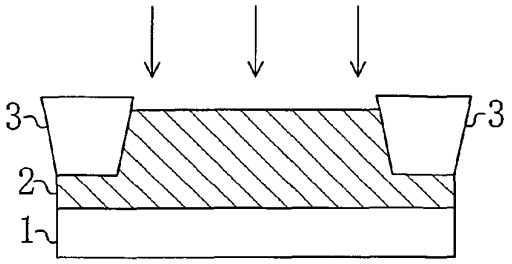

FIG. 12E

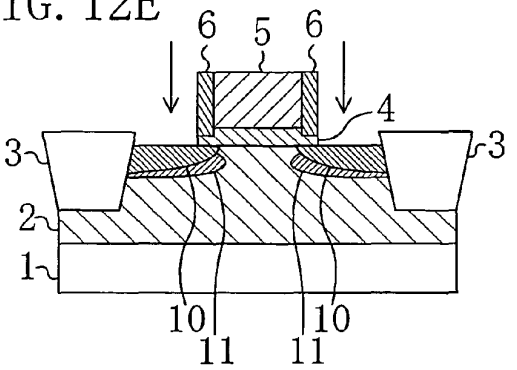

FIG. 12B

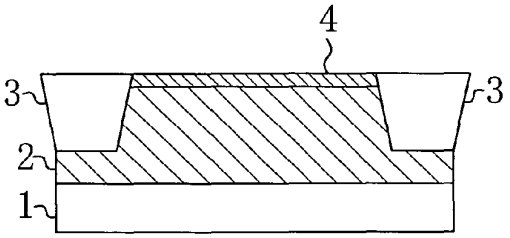

FIG. 12F

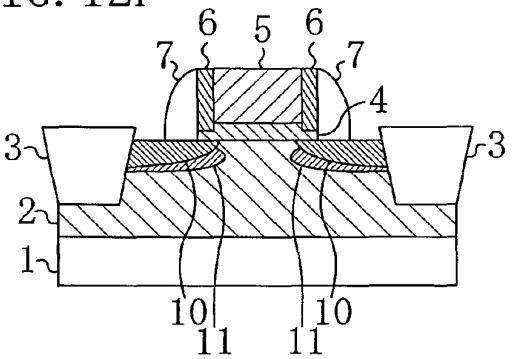

FIG. 12C

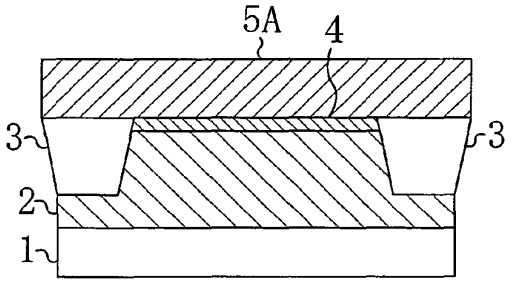

FIG. 12G

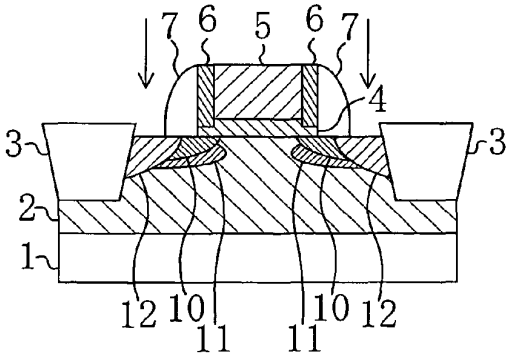

FIG. 12D

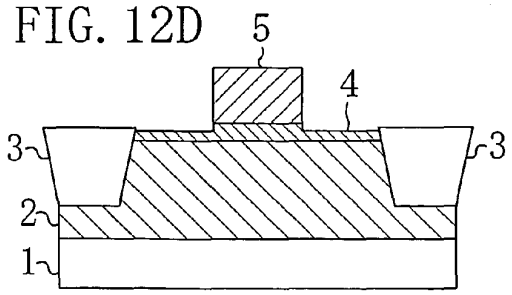

FIG. 13A

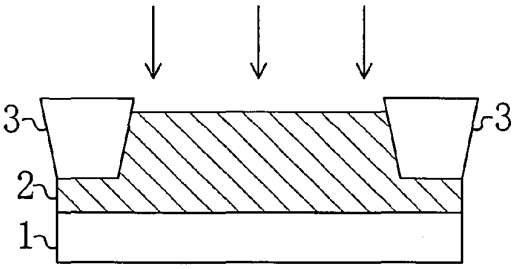

FIG. 13E

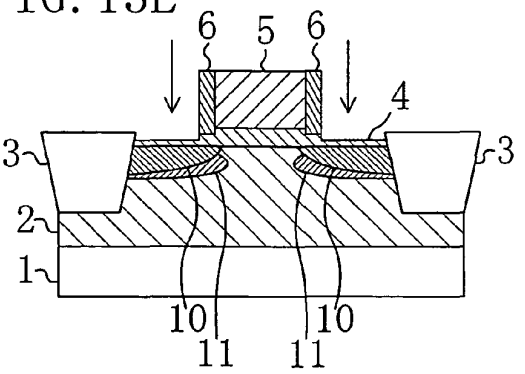

FIG. 13B

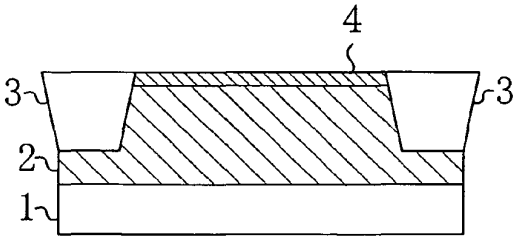

FIG. 13F

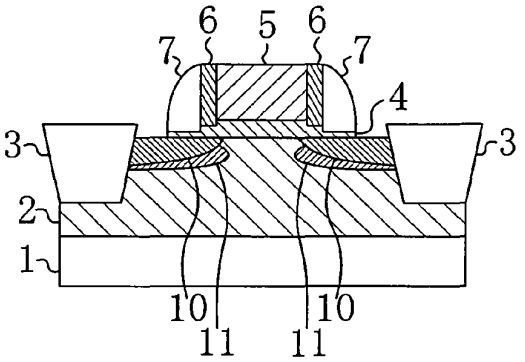

FIG. 13C

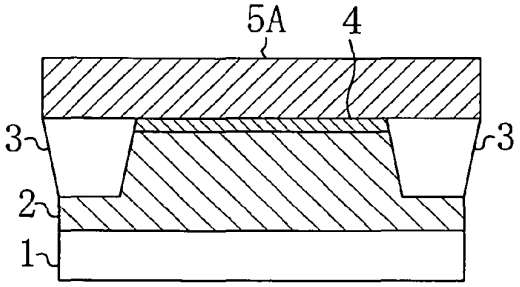

FIG. 13G

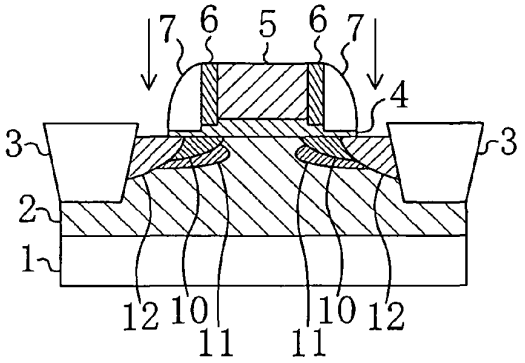

FIG. 13D

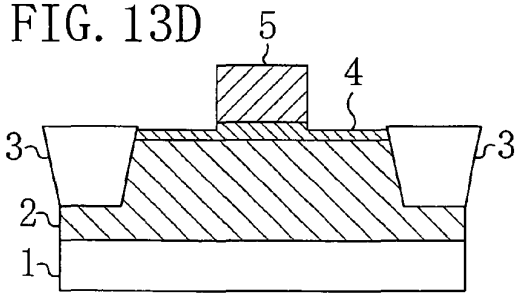

FIG. 14A

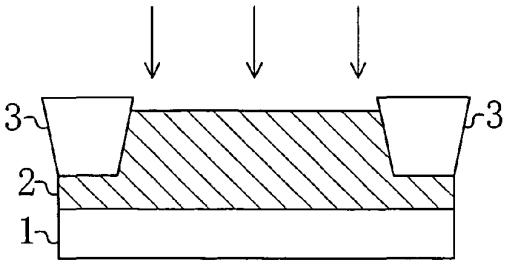

FIG. 14B

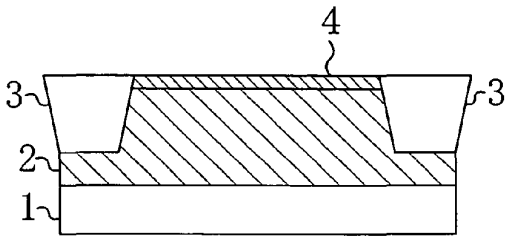

FIG. 14C

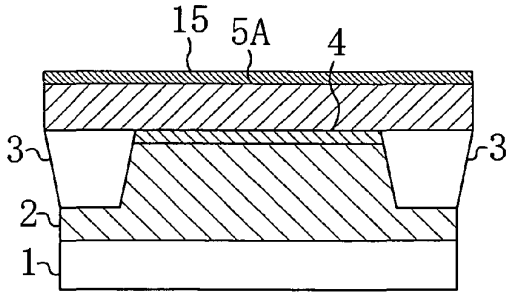

FIG. 14D

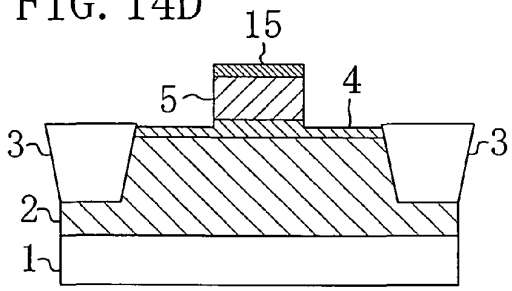

FIG. 14E

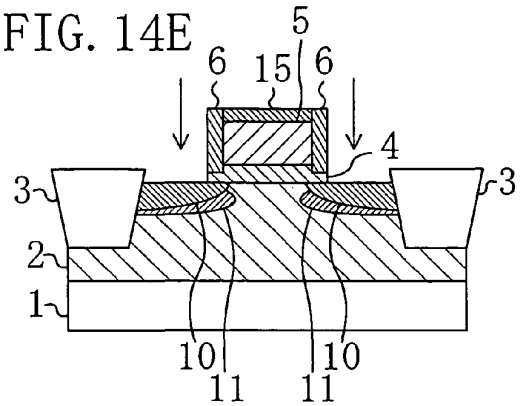

FIG. 14F

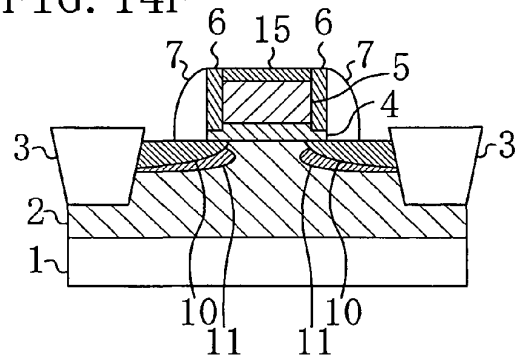

FIG. 14G

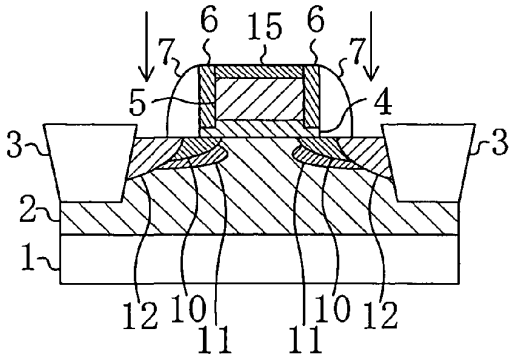

FIG. 15A

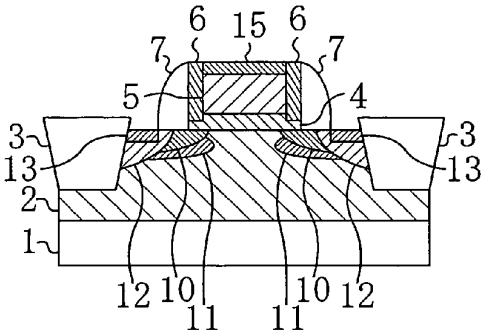

FIG. 15C

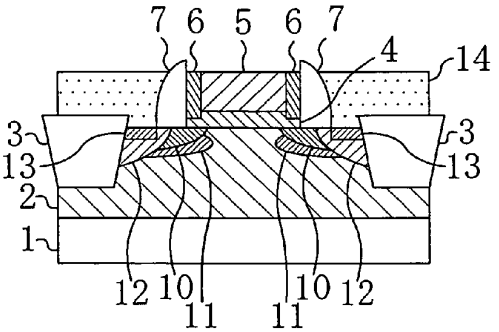

FIG. 15B

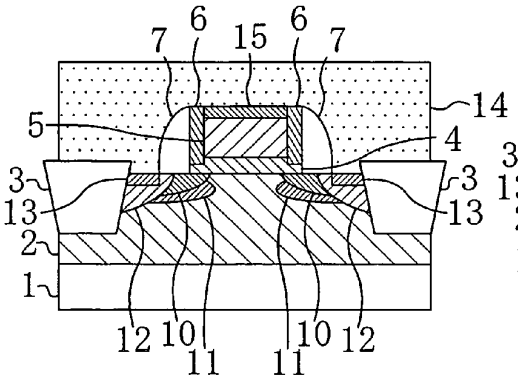

FIG. 15D

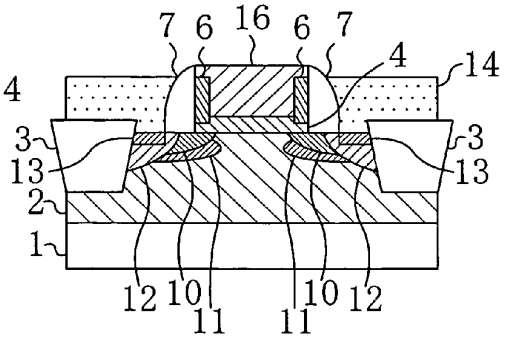

FIG. 16A
PRIOR ART

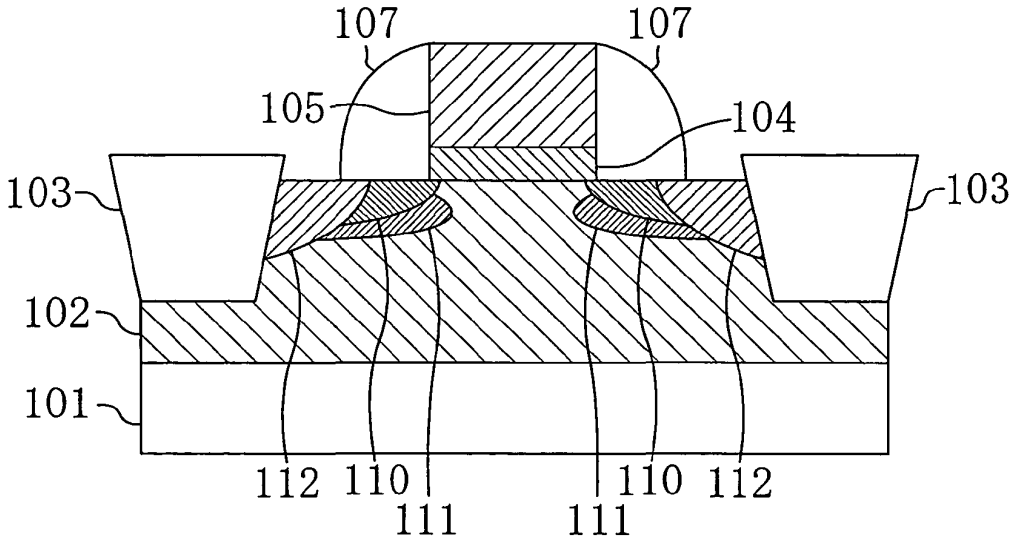

FIG. 16B
PRIOR ART

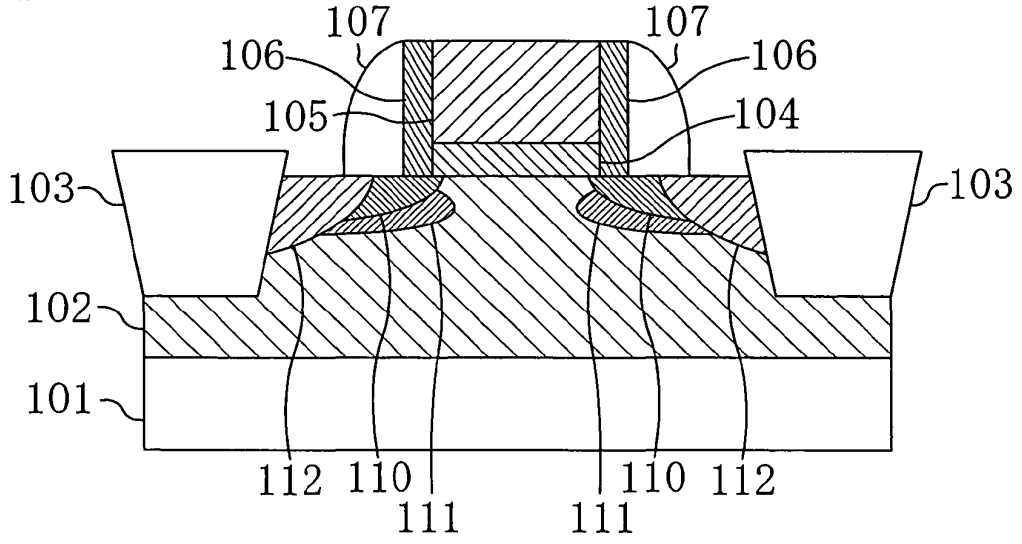

SEMICONDUCTOR DEVICE AND METHOD FOR FABRICATING THE SAME

BACKGROUND OF THE INVENTION

1. Field of the Invention

The present invention relates to a semiconductor device and a method for fabricating the semiconductor device. Specifically, the present invention relates to a structure of a MISFET (metal insulator semiconductor field-effect transistor) and a method for fabricating the MISFET and, more particularly, relates to techniques for improving the driving power and reliability of a MISFET.

2. Description of Prior Art

In recent years, as the degree of integration, function and operation speed of semiconductor integrated circuit devices have been highly improved, there have been attempts to reduce a junction depth of an extension according to a scaling rule and, at the same time, to use, as a gate insulating film of a MISFET, a high dielectric constant film formed of a Hf based oxide, Al based oxide or the like, which has a relative dielectric constant of 10 or more, instead of an SiO_2 based insulating film having a relative dielectric constant of about 4.

FIGS. **16**A and **16**B are cross-sectional views illustrating respective structures of known MISFETs using a high dielectric constant gate insulating film, respectively (see Ken Watanabe, *HfSiON-CMOS technology for achieving high performance and high reliability*, Semi. Forum Japan, 2005).

As shown in FIG. **16**A, a gate electrode **105** is formed on a region of a well **102** surrounded by a STI (shallow trench isolation) **103**. The region of the well **102** surrounded by the STI serves as an active region of a substrate **101**. The gate electrode **105** is provided on the region with a high dielectric constant gate insulating film **104** interposed therebetween. An insulating sidewall **107** is formed on each side of the gate electrode **105**. An extension region **110** is formed in part of the well **102** located under the insulating sidewall **107**. A pocket region **111** is formed in part of the well **102** located under the extension region **110**. Source/drain regions **112** are formed so that each of the source/drain regions **112** is provided in parts of the well **102** located at the external side to the extension region **110** and the pocket region **111** when viewed from the gate electrode **105**.

A structure shown in FIG. **16**B is different from a structure shown in FIG. **16**A in that a sidewall **107** is formed on each side of a gate electrode **105** with an insulating offset sidewall **106** interposed therebetween. Thus, an overlapping amount of the gate electrode **105** and an extension region **110** can be optimized in a simple manner.

SUMMARY OF THE INVENTION

However, in a structure of a known MISFET using a high dielectric constant gate insulating film, side end portions of the high dielectric constant gate insulating film are in direct contact with sidewalls. Thus, in forming sidewalls of, for example, a silicon oxide film or the like, a composition of the side end portions of the high dielectric constant gate insulating film becomes closer to SiO_2 or like other inconvenience occurs. As a result, reduction in the dielectric constant and insulation property of the high dielectric constant gate insulating film is caused at gate electrode end part, so that device characteristics of the MISFET are deteriorated and the reliability of the gate insulating film is degraded.

In view of the above-described problems, it is therefore an object of the present invention to improve characteristics of a MISFET without degrading of a high dielectric constant gate insulating film.

To achieve the above-described object, the inventors of the present application have devised a MISFET structure in which a high dielectric constant gate insulating film is kept remaining under sidewalls to prevent end portions of the high dielectric constant gate insulating film from being in contact with the sidewalls, and a method for forming the MISFET structure. In the mean time, when the high dielectric constant gate insulating film is kept remaining under the sidewalls, a capacitance between gate/drain regions is increased, thus resulting in adverse effects on circuit speed. Also, in such cases, when extension implantation or LDD (lightly doped drain) implantation is performed, it is necessary to implant ions through a high dielectric constant film. Thus, when ion implantation is performed, expansion of an implanted impurity in the depth direction is increased, in other words, a junction point of an extension or an LDD is located at a large depth, so that desired device characteristics can not be obtained. This is because implantation acceleration energy is increased for the following reasons.

Reason 1) With use of a high dielectric constant film as a gate insulating film, a desired dielectric constant can be achieved even without having the thickness of the high dielectric constant film reduced. Therefore, the thickness of the high dielectric constant film has to be set at a large value.

Reason 2) A high dielectric constant film contains heavy metal and Rp (projection range) of implanted ions is small.

To cope with this problem, the inventors have devised a MISFET structure in which a high dielectric constant gate insulating film is kept remaining under sidewalls and part of the high dielectric constant gate insulating film located under the sidewalls is made to have a smaller thickness than a thickness of part of the high dielectric constant gate insulating film located under a gate electrode, and a method for forming the MISFET structure.

Specifically, a semiconductor device according to the present invention includes: a gate electrode formed on the high dielectric constant gate insulating film; and an insulating sidewall formed on each side surface of the gate electrode. In the semiconductor device, the high dielectric constant gate insulating film is continuously formed so as to extend from under the gate electrode to under the insulating sidewall, and at least part of the high dielectric constant gate insulating film located under the insulating sidewall has a smaller thickness than a thickness of part of the high dielectric constant gate insulating film located under the gate electrode.

In the semiconductor device of the present invention, the insulating sidewall may include a first insulating sidewall formed on a side surface of the gate electrode and a second insulating sidewall formed on the side surface of the gate electrode with the first insulating sidewall interposed therebetween, the high dielectric constant gate insulating film may be continuously formed so as to extend from under the gate electrode to under the first insulating sidewall, and part of the high dielectric constant gate insulating film located under the first insulating sidewall may have a smaller thickness than a thickness of part of the high dielectric constant gate insulating film located under the gate electrode.

When the insulating sidewall includes the first insulating sidewall and the second insulating sidewall, the high dielectric constant gate insulating film may be formed so as not to be located under the second insulating sidewall.

When the insulating sidewall includes the first insulating sidewall and the second insulating sidewall, the high dielec-

UMC1001
UMC v. AICP

tric constant gate insulating film may be continuously formed so as to extend from under the gate electrode to under the second insulating sidewall, and part of the high dielectric constant gate insulating film located under the second insulating sidewall may have the same thickness as a thickness of part of the high dielectric constant gate insulating film located under the first insulating sidewall.

When the insulating sidewall includes the first insulating sidewall and the second insulating sidewall, the high dielectric constant gate insulating film may be continuously formed so as to extend from under the gate electrode to under the second insulating sidewall, and part of the high dielectric constant gate insulating film located under the second insulating sidewall may have a smaller thickness than a thickness of part of the high dielectric constant gate insulating film located under the first insulating sidewall.

In the semiconductor device of the present invention, the insulating sidewall may include a first insulating sidewall formed on a side surface of the gate electrode and a second insulating sidewall formed on the side surface of the gate electrode with the first insulating sidewall interposed therebetween, the high dielectric constant gate insulating film may be continuously formed so as to extend from under the gate electrode to under the second insulating sidewall, part of the high dielectric constant gate insulating film located under the first insulating sidewall may have the same thickness as a thickness of part of the high dielectric constant gate insulating film located under the gate electrode, and part of the high dielectric constant gate insulating film located under the second insulating sidewall may have a smaller thickness than a thickness of part of the high dielectric constant gate insulating film located under the gate electrode.

In the semiconductor device of the present invention, the high dielectric constant gate insulating film may include a notch at a side end portion.

The semiconductor device of the present invention may further include a buffer insulating film between the substrate and the high dielectric constant gate insulating film. In such a case, the buffer insulating film may be a silicon oxide film or a silicon oxynitride film.

In the semiconductor device of the present invention, the gate electrode may be a fully silicided gate electrode of which an entire region has been silicided.

A method for fabricating a semiconductor device according to the present invention includes the steps of: a) forming a high dielectric constant gate insulating film on an active region of a substrate; b) forming a gate electrode on the high dielectric constant gate insulating film; c) etching, after the step b), part of the high dielectric constant gate insulating film located in an external side to the gate electrode to reduce a thickness of the part; and d) forming, after the step c), an insulating sidewall on a side surface of the gate electrode.

The method for fabricating a semiconductor device according to the present invention may further include, after the step d), the step of removing part of the high dielectric constant gate insulating film located in an external side to the insulating sidewall.

In the method for fabricating a semiconductor device according to the present invention, the insulating sidewall may include a first insulating sidewall and a second insulating sidewall, and the step d) may include the step d1) of forming the first insulating sidewall on a side surface of the gate electrode and the step of d2) of forming the second insulating sidewall on the side surface of the gate electrode with the first insulating sidewall interposed therebetween.

When the step d) includes the step d1) and the step d2), the method for fabricating a semiconductor device according to the present invention may further include, between the step d) and the step d2), the step of removing part of the high dielectric constant gate insulating film located in the external side to the first insulating sidewall.

When the step d) includes the step d1) and the step d2), the method for fabricating a semiconductor device according to the present invention may further include, between d1) and the step d2), the step of etching part of the high dielectric gate insulating film located in an external side to the first insulating sidewall to reduce a thickness of the part; and after the step d2), the step of removing part of the high dielectric constant gate insulating film located in an external side to the second insulating sidewall.

In the method for fabricating a semiconductor device according to the present invention, the dielectric constant gate insulating film may be selectively removed by wet etching.

In the method for fabricating a semiconductor device according to the present invention, the step b) may include the step of forming a protective film for covering an upper surface of the gate electrode, and the method may further include, after the step d), the step of siliciding a surface of part of the active region located in the external side to the insulating sidewall, removing the protective film and then fully siliciding the gate electrode.

The method for fabricating a semiconductor device according to the present invention further includes, before the step a), the step of forming a buffer insulating film on the active region, and in the step a), the high dielectric constant gate insulating film may be formed on the active region with the buffer insulating film interposed therebetween.

According to the present invention, a high dielectric constant gate insulating film is continuously formed so as to extend from under a gate electrode to under a sidewall. In other words, continuity of the high dielectric constant gate insulating film at a gate end portion is maintained. Thus, reduction in the dielectric constant and insulation property of the high dielectric constant gate insulating film at the gate end portion, caused by a side end portion of the high dielectric constant gate insulating film being in direct contact with a sidewall film, can be suppressed. Moreover, the high dielectric constant gate insulating film is formed so as to have a smaller thickness in the part located under the sidewall than a thickness of the part located under gate electrode. Thus, increase in a capacitance between a gate and a drain can be suppressed, so that adverse effects on circuit speed can be reduced. Furthermore, since extension implantation or LDD implantation is performed through the part of the high dielectric constant film which has a small thickness, increase in implantation acceleration energy can be suppressed. Accordingly, a shallow junction can be formed in an extension or a LDD in a simple manner. Therefore, device characteristics can be improved in a simple manner.

As has been described, the present invention relates to a semiconductor device and a method for fabricating the semiconductor device. Specifically, when the present invention is applied to a MISFET including a high dielectric constant gate insulating film, the effect of improving the driving power and reliability of the MISFET can be achieved and is therefore very useful.

BRIEF DESCRIPTION OF THE DRAWINGS

FIG. **1** is a cross-sectional view illustrating a structure of a semiconductor device according to a first embodiment of the present invention.

UMC1001
UMC v. AICP

FIG. **2** is a cross-sectional view illustrating a structure of a semiconductor device according to a second embodiment of the present invention.

FIG. **3** is a cross-sectional view illustrating a structure of a semiconductor device according to a second modified example of the second embodiment of the present invention.

FIG. **4** is a cross-sectional view illustrating a structure of a semiconductor device according to a third modified example of the second embodiment of the present invention.

FIG. **5** is a cross-sectional view illustrating a structure of a semiconductor device according to a third embodiment of the present invention.

FIG. **6** is a cross-sectional view illustrating a structure of a semiconductor device according to a modified example of the first embodiment of the present invention.

FIG. **7** is a cross-sectional view illustrating a structure of a semiconductor device according to a first modified example of the second embodiment of the present invention.

FIG. **8** is a cross-sectional view illustrating a structure of a semiconductor device according to a modified example of the third embodiment of the present invention.

FIG. **9** is a cross-sectional view illustrating a structure of a semiconductor device according to a fourth embodiment of the present invention.

FIG. **10** is a cross-sectional view illustrating a structure of a semiconductor device according to a modified example of the fourth embodiment of the present invention.

FIGS. **11**A through **11**F are cross-sectional views illustrating respective steps for fabricating a semiconductor device according to a fifth embodiment of the present invention.

FIGS. **12**A through **12**G are cross-sectional views illustrating respective steps for fabricating a semiconductor device according to a sixth embodiment of the present invention.

FIGS. **13**A through **13**G are cross-sectional views illustrating respective steps for fabricating a semiconductor device according to a seventh embodiment of the present invention.

FIGS. **14**A through **14**G are cross-sectional views illustrating respective steps for fabricating a semiconductor device according to an eighth embodiment of the present invention.

FIGS. **15**A through **15**D are cross-sectional views illustrating respective steps for fabricating a semiconductor device according to the eighth embodiment of the present invention.

FIGS. **16**A and **16**B are cross-sectional views illustrating a structure of a known MISFET, respectively.

DESCRIPTION OF THE PREFERRED EMBODIMENTS

First Embodiment

Hereafter, a semiconductor device according to a first embodiment of the present invention will be described with reference to the accompanying drawings. FIG. **1** is a cross-sectional view illustrating a structure of a semiconductor device (more specifically, a single sidewall type MISFET) according to the first embodiment. In this embodiment, description will be made using an n-type MISFET as an example. However, even when the present invention is applied to a p-type MISFET, the same effects as those of this embodiment can be achieved.

As shown in FIG. **1**, a gate electrode **5** is formed on an active region of a p-type well **2** surrounded by a STI **3**. The p-type well **2** is formed in a substrate **1** made of, for example, silicon. The gate electrode **5** is formed on the active region with a high dielectric constant gate insulating film **4**A interposed therebetween. An insulating sidewall **7** is formed on each side surface of the gate electrode **5**. An n-type extension region **10** is formed in part of the p-type well **2** located under the sidewall **7**. Furthermore, a p-type pocket region **11** is formed in part of the p-type well **2** located under the n-type extension region **10**. N-type source/drain regions **12** are formed so that each of the source/drain regions **12** is provided in part of the p-type well **2** located in the external side to the n-type extension region **10** and the p-type pocket region **11** when viewed from the gate electrode **5**.

It is a first feature of this embodiment that the high dielectric constant gate insulating film **4**A is kept remaining not only under the gate electrode **5** but also under the sidewall **7**. That is, the high dielectric gate insulating film **4**A is continuously formed so as to extend from under the gate electrode **5** to under the sidewall **7**.

It is a second feature of this embodiment that the thickness of the part of the high dielectric constant gate insulating film **4**A located under the sidewall **7** is smaller than a thickness of the part of the high dielectric constant film **4**A located under the gate electrode **5**. That is, the gate insulating film **4**A is formed so as to have a convex shape.

According to this embodiment, each side end portion of the high dielectric constant gate insulating film **4**A is not in contact with the sidewall **7** and continuity of the high dielectric constant gate insulating film **4**A at an end portion of the gate electrode **5** is maintained. Accordingly, reduction in the dielectric constant and insulation property of the high dielectric constant gate insulating film **4**A at the end portion of the gate electrode **5** can be suppressed, so that deterioration of device characteristics of the MISFET and reduction in the reliability of the gate insulating film can be prevented.

According to this embodiment, the existence of the high dielectric constant gate insulating film **4**A under the sidewall **7** makes capacitive coupling between the gate electrode **5** and the n-type extension region **10** stronger in the vicinity of the end portion of the gate electrode **5**. As a result, a high overlapping effect between a gate and a drain can be achieved (see T. Hori, IEDM Tech. Dig., 1989, p. 777). Therefore, device characteristics and hot carrier reliability can be improved at the same time.

Meanwhile, in this embodiment, because of the existence of the high dielectric constant gate insulating film **4**A under the sidewall **7**, there might be cases where a capacitance particularly between the gate electrode **5** and each of the n-type source/drain regions **12** is increased and, accordingly, a circuit speed is reduced. However, as described above, in this embodiment, the high dielectric constant gate insulating film **4**A is formed so as to have a smaller thickness in the part located under the sidewall **7** than a thickness of the part located under the gate electrode **5**. Therefore, increase in a capacitance between the gate and the drain and adverse effect on the circuit speed can be suppressed.

As has been described, according to this embodiment, device/circuit characteristics of an MISFET and the reliability of a gate insulating film, which are conventionally in the trade-off relationship, can be largely improved at the same time.

Modified Example of First Embodiment

Hereafter, a semiconductor device according to a modified example of the first embodiment of the present invention will be described with reference to the accompanying drawings. FIG. **6** is a cross-sectional view illustrating a structure of a semiconductor device (more specifically, a single sidewall n-type MISFET) according to the modified example of the first embodiment.

As shown in FIG. **6**, this modified example is different from the first embodiment in that part of a high dielectric constant gate insulating film **4**A located under each side end portion of a sidewall **7**, i.e., a side portion of the high dielectric constant gate insulating film **4**A is removed in a notch shape, so that a notch **20** is provided.

According to this modified example, adverse effects on circuit speed due to increase in a capacitance between a gate electrode **5** and each of n-type source/drain regions **12** can be further suppressed.

Second Embodiment

Hereafter, a semiconductor device according to a second embodiment of the present invention will be described with reference to the accompanying drawings. In contrast with the first embodiment in which a single sidewall type MISFET is described, a double sidewall type MISFET (see H. Sayama et al., IEDM Tech. Dig., 2000, p. 239) in which an overlapping amount between a gate electrode and an extension region can be optimized in a simple manner will be described in the second embodiment. In this embodiment, description will be made using an n-type MISFET as an example. However, even when the present invention is applied to a p-type MISFET, the same effects as those of this embodiment can be achieved.

FIG. **2** is a cross-sectional view illustrating a structure of a semiconductor device according to the second embodiment. As shown in FIG. **2**, a gate electrode **5** is formed on an active region of a p-type well **2** surrounded by a STI **3**. The p-type well **2** is formed in a substrate **1** made of, for example, silicon. The gate electrode **5** is formed on the active region with a high dielectric constant gate insulating film **4**B interposed therebetween. An insulating sidewall **7** is formed on each side surface of the gate electrode **5** with an offset sidewall **6** interposed therebetween. An n-type extension region **10** is formed in each of parts of the p-type well **2** located under the offset sidewall **6** and the sidewall **7**. Furthermore, a p-type pocket region **11** is formed in part of the p-type well **2** located under the n-type extension region **10**. N-type source/drain regions **12** are formed so that each of the source/drain regions is provided in part of the p-type well **2** located in the external side to the n-type extension region **10** and the p-type pocket region **11** when viewed from the gate electrode **5**.

It is a first feature of this embodiment that the high dielectric constant gate insulating film **4**B is kept remaining not only under the gate electrode **5** but also under the offset sidewall **6**. That is, the high dielectric constant gate insulating film **4**B is continuously formed so as to extend from under the gate electrode **5** to under the offset sidewall **6**.

It is a second feature of this embodiment that the thickness of the part of the high dielectric constant gate insulating film **4**B located under the offset sidewall **6** is smaller than a thickness of the part of the high dielectric constant film **4**B located under the gate electrode **5**. That is, the gate insulating film **4**B is formed so as to have a convex shape.

According to this embodiment, each side end portion of the high dielectric constant gate insulating film **4**B is not in contact with the offset sidewall **6** and continuity of the high dielectric constant gate insulating film **4**B at an end portion of the gate electrode **5** is maintained. Accordingly, reduction in the dielectric constant and insulation property of the high dielectric constant gate insulating film **4**B at the end portion of the gate electrode **5** can be suppressed, so that deterioration of device characteristics of the MISFET and reduction in the reliability of the gate insulating film can be prevented.

According to this embodiment, the existence of the high dielectric constant gate insulating film **4**B under the offset sidewall **6** makes capacitive coupling between the gate electrode **5** and the n-type extension region **10** stronger in the vicinity of the end portion of the gate electrode **5**. As a result, a high overlapping effect between a gate and a drain can be achieved (see T. Hori, IEDM Tech. Dig., 1989, p. 777). Therefore, device characteristics and hot carrier reliability can be improved at the same time.

Moreover, according to this embodiment, the high dielectric constant gate insulating film **4**B does not exist under the sidewall **7**. Thus, increase in a capacitance between the gate electrode **5** and each of the n-type source/drain regions **12** can be further suppressed so that a small capacitance can be maintained. Accordingly, increase in a parasitic capacitance and adverse effects on circuit speed due to the increase can be suppressed at a minimum level.

As has been described, according to this embodiment, device/circuit characteristics of an MISFET and the reliability of a gate insulating film, which are conventionally in the trade-off relationship, can be largely improved at the same time.

First Modified Example of Second Embodiment

Hereafter, a semiconductor device according to a modified example of the second embodiment of the present invention will be described with reference to the accompanying drawings. FIG. **7** is a cross-sectional view illustrating a structure of the semiconductor device (more specifically, a double sidewall type MISFET) according to the first modified example of the second embodiment.

As shown in FIG. **7**, this modified example is different from the second embodiment is that part of a high dielectric constant gate insulating film **4**B located under each side end portion of the offset sidewall **6**, i.e., a side portion of the high dielectric constant gate insulating film **4**B is removed in a notch shape, so that a notch **20** is provided.

According to this modified example, adverse effects on circuit speed due to increase in a capacitance between a gate electrode **5** and each of n-type source/drain regions **12** can be further suppressed.

Second Modified Example of Second Embodiment

Hereafter, a semiconductor device according to a second modified example of the second embodiment of the present invention will be described with reference to the accompanying drawings. FIG. **3** is a cross-sectional view illustrating a structure of the semiconductor device (more specifically, a double sidewall type MISFET) according to the second modified example of the second embodiment.

This embodiment is different from the second embodiment in that a high dielectric constant gate insulating film **4**C is kept remaining not only under the gate electrode **5** and the offset sidewall **6** but also under the sidewall **7**. That is, the high dielectric constant gate insulating film **4**C is continuously formed so as to extend from under the gate electrode **5** to under the sidewall **7**.

In this modified example, the thickness of part of the high dielectric constant gate insulating film **4**C located under the sidewall **7** is the same as the thickness of part of the high dielectric constant gate insulating film **4**C located under the offset sidewall **6**. That is, the high dielectric constant gate insulating film **4**C is formed so as to have a convex shape.

According to this modified embodiment, the high dielectric constant gate insulating film **4**C is continuously formed so as to extend from under the gate electrode **5** to under the sidewall **7**. Thus, even when the offset sidewall **6** has a very

small width (thickness), each side end portion of the high dielectric constant gate insulating film **4**C is not in contact with the sidewall **7** and continuity of the high dielectric constant gate insulating film **4**C at an end portion of the gate electrode **5** is maintained. Accordingly, reduction in the dielectric constant and insulation property of the high dielectric constant gate insulating film **4**C at the end portion of the gate electrode **5** can be suppressed, so that deterioration of device characteristics of the MISFET and reduction in the reliability of the gate insulating film can be prevented.

In this modified example, as in the first embodiment, because of the existence of the high dielectric constant gate insulating film **4**C under sidewall **7**, there might be cases where a capacitance between the gate electrode **5** and each of the n-type source/drain regions **12** is increased. However, as has been described, in this modified example, the high dielectric constant gate insulating film **4**C is formed so as to have a smaller thickness in the part located under the sidewall **7** than a thickness of the part located under the gate electrode **5**. Therefore, increase in a parasitic capacitance and adverse effects on circuit speed due to the increase can be suppressed.

Third Modified Example of Second Embodiment

Hereafter, a semiconductor device according to a third modified example of the second embodiment of the present invention will be described with reference to the accompanying drawings. FIG. **4** is a cross-sectional view illustrating a structure of a semiconductor device (more specifically, a double sidewall type MISFET) according to the third modified example of the second embodiment.

A first difference between this modified example and the second embodiment is that in this modified example, a high dielectric constant gate insulating film **4**D is kept remaining not only under the gate electrode **5** and the offset sidewall **6** but also under the sidewall **7**. That is, the high dielectric constant gate insulating film **4**D is continuously formed so as to extend from under the gate electrode **5** to under the sidewall **7**.

A second difference between this modified example and the second embodiment is that in this modified example, the thickness of part of the high dielectric constant gate insulating film **4**D located under the offset sidewall **6** is the same as the thickness of part of the high dielectric constant gate insulating film **4**D located under the gate electrode **5**. The thickness of part of the high dielectric constant gate insulating film **4**D located under the sidewall **7** is smaller than the thickness of the part of the high dielectric constant gate insulating film **4**D located under the gate electrode **5**. That is, the high dielectric constant gate insulating film **4**D is formed so as to have a convex shape.

According to this modified example, the high dielectric constant gate insulating film **4**D is continuously formed so as to extend from under the gate electrode **5** to under the sidewall **7**. Thus, even when the offset sidewall **6** has a very small width (thickness), each side end portion of the high dielectric constant gate insulating film **4**D is not in contact with the sidewall **7** and continuity of the high dielectric constant gate insulating film **4**D at an end portion of the gate electrode **5** is maintained. Accordingly, reduction in the dielectric constant and insulation property of the high dielectric constant gate insulating film **4**D at the end portion of the gate electrode **5** can be suppressed, so that deterioration of device characteristics of the MISFET and reduction in the reliability of the gate insulating film can be prevented.

In this modified example, as in the first embodiment, because of the existence of the high dielectric constant gate insulating film **4**D under sidewall **7**, there might be cases where a capacitance between the gate electrode **5** and each of the n-type source/drain regions **12** is increased. However, as has been described, in this modified example, the high dielectric constant gate insulating film **4**D is formed so as to have a smaller thickness in the part located under the sidewall **7** than a thickness of the part located under the gate electrode **5**. Therefore, increase in a parasitic capacitance and adverse effects on circuit speed due to the increase can be suppressed.

Third Embodiment

Hereafter, a semiconductor device according to a third embodiment of the present invention will be described with reference to the accompanying drawings. In contrast with the first embodiment in which a single sidewall type MISFET is described, a double sidewall type MISFET (see H. Sayama et al., IEDM Tech. Dig., 2000, p. 239) in which an overlapping amount between a gate electrode and an extension region can be optimized in a simple manner will be described in the third embodiment. In this embodiment, description will be made using an n-type MISFET as an example. However, even when the present invention is applied to a p-type MISFET, the same effects as those of this embodiment can be achieved.

FIG. **5** is a cross-sectional view illustrating a structure of a semiconductor device according to the third embodiment. As shown in FIG. **5**, a gate electrode **5** is formed on an active region of a p-type well **2** surrounded by a STI **3**. The p-type well **2** is formed in a substrate **1** made of, for example, silicon. The gate electrode **5** is formed on the active region with a high dielectric constant gate insulating film **4**E interposed therebetween. An insulating sidewall **7** is formed on each side surface of the gate electrode **5** with an offset sidewall **6** interposed therebetween. An n-type extension region **10** is formed in each of parts of the p-type well **2** located under the offset sidewall **6** and the sidewall **7**. Furthermore, a p-type pocket region **11** is formed in part of the p-type well **2** located under the n-type extension region **10**. N-type source/drain regions **12** are formed so that each of the source/drain is provided in part of the p-type well **2** located in the external side to the n-type extension region **10** and the p-type pocket region **11** when viewed from the gate electrode **5**.

It is a first feature that the high dielectric constant gate insulating film **4**E is kept remaining not only under the gate electrode **5** and but also under each of the offset sidewall **6** and the sidewall **7**. That is, the high dielectric constant gate insulating film **4**E is continuously formed so as to extend from under the gate electrode **5** to under the sidewall **7**.

It is a second feature of this embodiment that the thickness of the part of the high dielectric constant gate insulating film **4**E located under the offset sidewall **6** is smaller than a thickness of the part of the high dielectric constant film **4**E located under the gate electrode **5** and the thickness of the high dielectric constant gate insulating film **4**E located under the sidewall **7** is smaller than the thickness of the part of the high dielectric constant film **4**E located under the offset sidewall **6**. That is, the gate insulating film **4**E is formed so as to have a double convex shape.

According to this embodiment, the high dielectric constant gate insulating film **4**E is continuously formed so as to extend from under the gate electrode **5** to under the sidewall **7**. Thus, even when the offset sidewall **6** has a very small width (thickness), each side end portion of the high dielectric constant gate insulating film **4**E is not in contact with the sidewall **7** and continuity of the high dielectric constant gate insulating film **4**E at an end portion of the gate electrode **5** is maintained. Accordingly, reduction in the dielectric constant and insula-

UMC1001
UMC v. AICP

tion property of the high dielectric constant gate insulating film **4**E at the end portion of the gate electrode **5** can be suppressed, so that deterioration of device characteristics of the MISFET and reduction in the reliability of the gate insulating film can be prevented.

According to this embodiment, the existence of the high dielectric constant gate insulating film **4**E under the offset sidewall **6** makes capacitive coupling between the gate electrode **5** and the n-type extension region **10** stronger at the vicinity of the end portion of the gate electrode **5**. As a result, a high overlapping effect between a gate and a drain can be achieved (see T. Hori, IEDM Tech. Dig., 1989, p. 777). Therefore, device characteristics and hot carrier reliability can be improved at the same time.

As in the first embodiment, in this embodiment, because of the existence of the high dielectric constant gate insulating film **4**E under sidewall **7**, there might be cases where a capacitance between the gate electrode **5** and each of the n-type source/drain regions **12** is increased and, accordingly, a circuit speed is reduced. However, as has been described, in this embodiment, the high dielectric constant gate insulating film **4**E is formed so that the thickness of the high dielectric constant gate insulating film **4**E is reduced in the part located under the offset sidewall **6** and then is further reduced in the part located under the sidewall **7**. Therefore, increase in a parasitic capacitance and adverse effects on circuit speed due to the increase can be suppressed so that the parasitic capacitance is a very low level.

As has been described, according to this embodiment, device/circuit characteristics of an MISFET and the reliability of a gate insulating film, which are conventionally in the trade-off relationship, can be largely improved at the same time.

Modified Example of Third Embodiment

Hereafter, a semiconductor device according to a modified example of a third embodiment of the present invention will be described with reference to the accompanying drawings. FIG. **8** is a cross-sectional view illustrating a structure of a semiconductor device (more specifically, a double sidewall type MISFET) according to the modified example of the third embodiment.

As shown in FIG. **8**, this modified example is different from the first embodiment in that part of a high dielectric constant gate insulating film **4**E located under each side end portion of a sidewall **7**, i.e., a side portion of the high dielectric constant gate insulating film **4**E is removed in a notch shape, so that a notch **20** is provided.

According to this modified example, adverse effects on circuit speed due to increase in a capacitance between a gate electrode **5** and each of n-type source/drain regions **12** can be further suppressed.

Fourth Embodiment

Hereafter, a semiconductor device according to a fourth embodiment of the present invention will be described with reference to the accompanying drawings. FIG. **9** is a cross-sectional view illustrating a structure of a semiconductor device (more specifically, a single sidewall type MISFET) according to the fourth embodiment of the present invention. In this embodiment description will be made using an n-type MISFET as an example. However, even when the present invention is applied to a p-type MISFET, the same effects as those of this embodiment can be achieved.

As shown in FIG. **9**, this embodiment is different from the first embodiment in that, for example, a silicon oxide film, a silicon oxynitride film or the like is provided as a buffer insulating film **25** between a substrate **1** and a high dielectric constant gate insulating film **4**A.

According to this embodiment, in addition to the effects of the first embodiment, an interface between a substrate and a gate insulating film can be advantageously kept in a normal state. Specifically, by forming the high dielectric constant gate insulating film **4**A on the substrate **1** with the buffer insulating film **25** interposed therebetween, deterioration of an interface between a substrate and a gate insulating film can be suppressed, compared to the case where the high dielectric constant gate insulating film **4**A is formed directly on the substrate **1**.

In this embodiment, the buffer insulating film **25** is provided between the high dielectric constant gate insulating film **4**A of the first embodiment and the substrate **1**. However, instead of this structure, even if the buffer insulating film **25** is provided between the substrate **1** and the high dielectric constant gate insulating film **4**B of the second embodiment, the high dielectric constant gate insulating film **4**C of the second modified example of the second embodiment, the high dielectric constant gate insulating film **4**D of the third modified example of the second embodiment or the high dielectric constant gate insulating film **4**E of the third embodiment, the same effects as those of this embodiment can be achieved. Moreover, instead of providing the buffer insulating film **25** between the substrate **1** and the high dielectric constant gate insulating film **4**A, **4**B, **4**C, **4**D or **4**E, a buffer insulating film may be provided between the gate electrode **5** and the high dielectric constant gate insulating film **4**A, **4**B, **4**C, **4**D or **4**E. With such a structure, compared to the case where the gate electrode **5** is directly formed on the high dielectric constant gate insulating film **4**A, **4**B, **4**C, **4**D or **4**E, deterioration of an interface between a gate electrode and a gate insulating film can be prevented. As another alternative, a buffer insulating film may be formed between the gate electrode **5** and the high dielectric constant gate insulating film **4**A, **4**B, **4**C, **4**D or **4**E as well as forming the buffer insulating film **25** between the substrate **1** and the high dielectric constant gate insulating film **4**A, **4**B, **4**C, **4**D or **4**E. With such a structure, deterioration of each of the substrate-gate insulating film interface and the gate insulating film-gate electrode interface can be prevented at the same time.

Modified Example of Fourth Embodiment

Hereafter, a semiconductor device according to a modified example of the fourth embodiment of the present invention will be described with reference to the accompanying drawings. FIG. **10** is a cross-sectional view illustrating a structure of a semiconductor device (more specifically, a single sidewall type MISFET) according to the modified example of the fourth embodiment.

As shown in FIG. **10**, this modified example is different from the fourth embodiment in that part of a laminated insulating film of a high dielectric constant gate insulating film **4**A and a buffer insulating film **25** located under a side end portion of each sidewall **7**, i.e., a side end portion of the laminated insulating film is removed in a notch shape, so that a notch **20** is provided.

According to this modified example, adverse effects on circuit speed due to increase in a capacitance between a gate electrode **5** and each of n-type source/drain regions **12** can be further suppressed.

UMC1001
UMC v. AICP

In this modified example, the notch **20** is provided in the side end portion of the laminated insulating film of the high dielectric constant gate insulating film **4**A and the buffer insulating film **25** of the first embodiment. However, instead of this structure, even if a notch is provided in a side end portion of a laminated insulating film of the buffer insulating film **25** and the high dielectric constant gate insulating film **4**B of the second embodiment, the high dielectric constant gate insulating film **4**C of the second modified example of the second embodiment, the high dielectric constant gate insulating film **4**D of the third modified example of the second embodiment or the high dielectric constant gate insulating film **4**E of the third embodiment, the same effects of the modified example can be achieved. In such cases, a buffer insulating film may be provided between the gate electrode **5** and the high dielectric constant gate insulating film **4**A, **4**B, **4**C, **4**D or **4**D as well as forming the buffer insulating film **25** between the substrate **1** and the high dielectric constant gate insulating film **4**A, **4**B, **4**C, **4**D or **4**D.

Fifth Embodiment

Hereafter, a method for fabricating a semiconductor device according to a fifth embodiment of the present invention will be described with reference to the accompanying drawings. In this embodiment, description will be made using a method for fabricating an n-type MISFET as an example. FIGS. **11**A through **11**F are cross-sectional views illustrating respective steps for fabricating a semiconductor device according to the fifth embodiment.

First, as shown in FIG. **11**A, a STI **3** which is to be an isolation region is selectively formed on a substrate **1** of, for example, silicon and then, for example, B (boron) is ion implanted into the substrate **1** at an implantation energy of 300 keV and a dose of 1×10^{13} cm^{-2}. Thus, a p-type well **2** which is to be an active region is formed. Subsequently, ion implantation (of B at an implantation energy of 150 keV and a dose of 1×10^{13} cm^{-2}) for punch-through stopper formation and ion implantation (of B at an implantation energy of 20 keV and a dose of 5×10^{12} cm^{-2}) for channel formation are performed.

Next, as shown in FIG. **11**B, as a buffer insulating film, for example, a silicon oxide film (not shown) is formed on the active region of the p-type well **2** surrounded by the STI **3** so as to have a thickness of about 0.5 nm and then, as a high dielectric constant film **4**, for example, a HfSiON film is deposited thereon to a thickness of about 4 nm (i.e., about 1 nm in terms of an equivalent oxide thickness).

Next, as shown in FIG. **11**C, for example, a gate electrode material film **5**A is formed on the high dielectric constant gate insulating film **4** so as to have a thickness of about 100 nm.

Next, a resist pattern (not shown) is formed on the gate electrode material film **5**A so as to cover a gate electrode formation region, and then the gate electrode material film **5**A is etched using the resist pattern as a mask, thereby forming, as shown in FIG. **11**D, a gate electrode **5**. Thereafter, part of the high dielectric constant gate insulating film **4** located in the external side to the gate electrode **5** is removed by a thickness of about 2 nm by selective etching. Thus, a thickness of part of the high dielectric constant gate insulating film **4** located in the external side to the gate electrode **5** can be reduced so that a remaining thickness of the part of the high dielectric constant gate insulating film **4** becomes about 2 nm. Subsequently, using the gate electrode **5** as a mask, for example, As (arsenic) is ion implanted into the substrate **1** at an implantation energy of 2 keV and a dose of 1×10^{15} cm^{-2}, thereby forming an n-type extension region **10**. Thereafter, using the gate electrode **5** as a mask, for example, B is ion implanted into the substrate **1** at an implantation energy of 10 keV and a dose of 3×10^{13} cm^{-2}, thereby forming a p-type pocket region **11**. In this case, the n-type extension region **10** may be formed after forming the p-type pocket region **11**.

Next, an insulating film is deposited over the substrate **1** to a thickness of about 50 nm, and then the insulating film is etched back to form, as shown in FIG. **1**E, an insulating sidewall **7** on each side surface of the gate electrode **5**.

Next, using the gate electrode **5** and the sidewall **7** as a mask, for example, As is ion implanted into the substrate **1** at an implantation energy of 10 keV and a dose of 5×10^{15} cm^{-2}, and then, for example, spike RTA (rapid thermal annealing) is performed at a temperature of about 1050° C., thereby activating the implanted impurity. Thus, as shown in FIG. **11**F, n-type source/drain regions **12** are formed.

According to the above-described fabrication method of this embodiment, the MISFET structure (see FIG. **1**) of the first embodiment can be realized in a relatively simple manner.

Meanwhile, the high dielectric constant gate insulating film **4** contains heavy metal and thus Rp (projection range) of implanted ions passing through the high dielectric constant gate insulating film **4** tends to be small. Therefore, in the process step of FIG. **11**D, if without reducing the thickness of the high dielectric constant gate insulating film **4**, ion implantation is performed to the substrate **1** covered with the high dielectric constant gate insulating film **4** in the external side to the gate electrode **5** to form the n-type extension region **10** or the p-type pocket region **11**, an acceleration energy has to be increased. However, in this embodiment, the part of the high dielectric constant gate insulating film **4** located in the external side to the gate electrode **5** has a reduced thickness, so that increase in acceleration energy can be suppressed. Accordingly, a shallow junction can be formed in the n-type extension region **10** in a simple manner and thus device characteristics can be improved in a simple manner.

In this embodiment, after the sidewall **7** has been formed, for example, part of the high dielectric constant gate insulating film **4** located in the external side to the sidewall **7** may be removed by wet etching using hydrofluoric acid or the like or selective dry etching. In such a case, when wet etching is used, part of the high dielectric constant gate insulating film **4** located under each side end portion of the sidewall **7**, i.e., a side end portion of the high dielectric constant gate insulating film **4** may be removed in a notch shape, so that a notch is formed. Thus, the MISFET structure (see FIG. **6**) of the modified example of the first embodiment can be realized in a simple manner.

In this embodiment, a target thickness for reduction in the thickness of the part of the high dielectric constant gate insulating film **4** located in the external side to the gate electrode **5** is not particularly limited. However, for example, when an HfSiON film is used as the high dielectric constant gate insulating film **4**, to suppress increase in a capacitance between a gate and a grain, the thickness of part of the high dielectric constant gate insulating film **4** located in the external side to the gate electrode **5** is preferably reduced to about 2 nm or less (so that a surface of the substrate **1** is not exposed).

Sixth Embodiment

Hereafter, a method for fabricating a semiconductor device according to a sixth embodiment of the present invention will be described with reference to the accompanying drawings. In this embodiment, description will be made using a method

UMC1001
UMC v. AICP

for fabricating an n-type MISFET as an example. FIGS. **12**A through **12**G are cross-sectional views illustrating respective steps for fabricating a semiconductor device according to the sixth embodiment.

First, as shown in FIG. **12**A, a STI **3** which is to be an isolation region is selectively formed on a substrate **1** of, for example, silicon and then, for example, B is ion implanted into the substrate **1** at an implantation energy of 300 keV and a dose of 1×10^{13} cm^{-2}. Thus, a p-type well **2** which is to be an active region is formed. Subsequently, ion implantation (of B at an implantation energy of 150 keV and a dose of 1×10^{13} cm^{-2}) for punch-through stopper formation and ion implantation (of B at an implantation energy of 20 keV and a dose of 5×10^{12} cm^{-2}) for channel formation are performed.

Next, as shown in FIG. **12**B, as a buffer insulating film, for example, a silicon oxide film (not shown) is formed on the active region of the p-type well **2** surrounded by the STI **3** so as to have a thickness of about 0.5 nm and then, as a high dielectric constant film **4**, for example, a HfSiON film is deposited thereon to a thickness of about 4 nm (i.e., about 1 nm in terms of an equivalent oxide thickness).

Next, as shown in FIG. **12**C, for example, a gate electrode material film **5**A is formed on the high dielectric constant gate insulating film **4** so as to have a thickness of about 100 nm.

Next, a resist pattern (not shown) is formed on the gate electrode material film **5**A so as to cover a gate electrode formation region, and then the gate electrode material film **5**A is etched using the resist pattern as a mask, thereby forming, as shown in FIG. **12**D, a gate electrode **5**. Thereafter, part of the high dielectric constant gate insulating film **4** located in the external side to the gate electrode **5** is removed by a thickness of about 2 nm by selective etching. Thus, a thickness of the part of the high dielectric constant gate insulating film **4** located in the external side to the gate electrode **5** can be reduced so that a remaining thickness of the part of the high dielectric constant gate insulating film **4** becomes about 2 nm.

Next, an insulating film is deposited over the substrate **1** to a thickness of about 10 nm, and then the insulating film is etched back to form, as shown in FIG. **12**E, an insulating offset sidewall **6** on each side surface of the gate electrode **5**. Thereafter, part of the high dielectric constant gate insulating film **4** located in the external side to the offset sidewall **6** is removed by wet etching using, for example, hydrofluoric acid or selective dry etching. Subsequently, using the gate electrode **5** and the offset sidewall **6** as a mask, for example, As is ion implanted into the substrate **1** at an implantation energy of 2 keV and a dose of 1×10^{15} cm^{-2}, thereby forming an n-type extension region **10**. Thereafter, using the gate electrode **5** and the offset sidewall **6** as a mask, for example, B is ion implanted into the substrate **1** at an implantation energy of 10 keV and a dose of 3×10^{13} cm^{-2}, thereby forming a p-type pocket region **11**.

Next, an insulating film is deposited over the substrate **1** to a thickness of about 50 nm, and then the insulating film is etched back to form, as shown in FIG. **12**F, an insulating sidewall **7** on each side surface of the gate electrode **5** with the offset sidewall **6** interposed therebetween.

Next, using the gate electrode **5**, the offset sidewall **6** and the sidewall **7** as a mask, for example, As is ion implanted into the substrate **1** at an implantation energy of 10 keV and a dose of 5×10^{15} cm^{-2}, and then, for example, spike RTA (rapid thermal annealing) is performed at a temperature of about 1050° C., thereby activating the implanted impurity. Thus, as shown in FIG. **12**G, n-type source/drain regions **12** are formed.

According to the above-described fabrication method of this embodiment, the MISFET structure (see FIG. **2**) of the second embodiment can be realized in a relatively simple manner.

In this embodiment, after the offset sidewall **6** has been formed, part of the high dielectric constant gate insulating film **4** located in the external side to the offset sidewall **6** is removed, for example, by wet etching using hydrofluoric acid or the like. When this wet etching is performed, part of the high dielectric constant gate insulating film **4** located under each side end portion of the offset sidewall **6**, i.e., a side end portion of the high dielectric constant gate insulating film **4** may be removed in a notch shape, so that a notch is formed. Thus, the MISFET structure (see FIG. **7**) of the first modified example of the second embodiment can be realized in a simple manner.

In this embodiment, a target thickness for reduction in the thickness of the part of the high dielectric constant gate insulating film **4** located in the external side to the gate electrode **5** is not particularly limited. However, for example, when an HfSiON film is used as the high dielectric constant gate insulating film **4**, to suppress increase in a capacitance between a gate and a grain, the thickness of part of the high dielectric constant gate insulating film **4** located in the external side to the gate electrode **5** is preferably reduced to about 2 nm or less (so that a surface of the substrate **1** is not exposed).

In this embodiment, after the offset sidewall **6** has been formed, part of the high dielectric constant gate insulating film **4** located in the external side to the offset sidewall **6** is removed, and then ion implantation for forming the n-type extension region **10** and the p-type pocket region **11** is performed. However, instead of performing these process steps, ion implantation for forming the n-type extension region **10** and the p-type pocket region **11** may be performed after the offset sidewall **6** is formed and with part of the high dielectric constant gate insulating film **4** having a reduced thickness remaining in the external side to the offset sidewall **6**. Even in this manner, according to this embodiment, the part of the high dielectric constant gate insulating film **4** located in the external side to the offset sidewall **6** has a reduced thickness, so that increase in acceleration energy can be suppressed. Accordingly, a shallow junction can be formed in the n-type extension region **10** in a simple manner and thus device characteristics can be improved in a simple manner. In this case, ion implantation for forming an extension region and a pocket region of an MISFET having a different channel type or another power supply system and being provided on the same substrate may be performed after ion implantation for forming the n-type extension region **10** and the p-type pocket region **11** and then removal of the part of the high dielectric constant gate insulating film **4** located in the external side to the offset sidewall **6**.

Seventh Embodiment

Hereafter, a method for fabricating a semiconductor device according to a seventh embodiment of the present invention will be described with reference to the accompanying drawings. FIGS. **13**A through **13**G are cross-sectional views illustrating respective steps for fabricating a semiconductor device according to the seventh embodiment.

First, as shown in FIG. **13**A, a STI **3** which is to be an isolation region is selectively formed on a substrate **1** of, for example, silicon and then, for example, B is ion implanted into the substrate **1** at an implantation energy of 300 keV and a dose of 1×10^{13} cm^{-2}. Thus, a p-type well **2** which is to be an

UMC1001
UMC v. AICP

active region is formed. Subsequently, ion implantation (of B at an implantation energy of 150 keV and a dose of 1×10^{13} cm^{-2}) for punch-through stopper formation and ion implantation (of B at an implantation energy of 20 keV and a dose of 5×10^{12} cm^{-2}) for channel formation are performed.

Next, as shown in FIG. **13**B, as a buffer insulating film, for example, a silicon oxide film (not shown) is formed on the active region of the p-type well **2** surrounded by the STI **3** so as to have a thickness of about 0.5 nm and then, as a high dielectric constant film **4**, for example, a HfSiON film is deposited thereon to a thickness of about 4 nm (i.e., about 1 nm in terms of an equivalent oxide thickness).

Next, as shown in FIG. **13**C, for example, a gate electrode material film **5**A is formed on the high dielectric constant gate insulating film **4** so as to have a thickness of about 100 nm.

Next, a resist pattern (not shown) is formed on the gate electrode material film **5**A so as to cover a gate electrode formation region, and then the gate electrode material film **5**A is etched using the resist pattern as a mask, thereby forming, as shown in FIG. **13**D, a gate electrode **5**. Thereafter, part of the high dielectric constant gate insulating film **4** located in the external side to the gate electrode **5** is removed by a thickness of about 2 nm by selective etching. Thus, a thickness of part of the high dielectric constant gate insulating film **4** located in the external side to the gate electrode **5** can be reduced so that a remaining thickness of the part of the high dielectric constant gate insulating film **4** becomes about 2 nm.

Next, an insulating film is deposited over the substrate **1** to a thickness of about 5 nm, and then the insulating film is etched back to form, as shown in FIG. **13**E, an insulating offset sidewall **6** on each side surface of the gate electrode **5**. Thereafter, part of the high dielectric constant gate insulating film **4** which is not covered by the gate electrode **5** and the offset sidewall **6** is further removed by about 1 nm. Thus, the thickness of part of the high dielectric gate insulating film **4** located in the external side to the offset sidewall **6** can be reduced to a thickness of about 1 nm. Then, using the gate electrode **5** and the offset sidewall **6** as a mask, for example, As is ion implanted into the substrate **1** at an implantation energy of 2 keV and a dose of 1×10^{15} cm^{-2}, thereby forming an extension region **10**. Thereafter, using the gate electrode **5** and the offset sidewall **6** as a mask, for example, B is ion implanted into the substrate **1** at an implantation energy of 10 keV and a dose of 3×10^{13} cm^{-2}, thereby forming a p-type pocket region **11**.

Next, an insulating film is deposited over the substrate **1** to a thickness of about 50 nm, and then the insulating film is etched back to form, as shown in FIG. **13**F, an insulating sidewall **7** on each side surface of the gate electrode **5** with the offset sidewall **6** interposed therebetween.

Next, using the gate electrode **5**, the offset sidewall **6** and the sidewall **7** as a mask, for example, As is ion implanted into the substrate **1** at an implantation energy of 10 keV and a dose of 5×10^{15} cm^{-2}, and then, for example, spike RTA (rapid thermal annealing) is performed at a temperature of about 1050° C., thereby activating the implanted impurity. Thus, as shown in FIG. **13**G, n-type source/drain regions **12** are formed.

According to the above-described fabrication method of this embodiment, the MISFET structure (see FIG. **5**) of the third embodiment can be realized in a relatively simple manner.

In this embodiment, the high dielectric constant gate insulating film **4**E is formed so that the thickness of the high dielectric constant gate insulating film **4**E is reduced in the part located under the offset sidewall **6** and then is further reduced in the part located in the external side to the offset sidewall **6**. Therefore, even when ion implantation for forming the n-type extension region **10** is performed using the gate electrode **5** and the offset sidewall **6** as a mask, increase in acceleration energy can be suppressed at a minimum level. Accordingly, a shallow junction can be formed at an even shallower depth in the n-type extension region **10** in a simple manner and thus device characteristics can be improved in a simple manner.

In this embodiment, after the sidewall **7** has been formed, the part of the high dielectric constant gate insulating film **4** located in the external side to the sidewall **7** may be removed, for example, by wet etching using hydrofluoric acid or the like or selective dry etching. Moreover, in such a case, part of the high dielectric constant gate insulating film **4** located under each side end portion of the sidewall **7**, i.e., each side end portion of the high dielectric constant gate insulating film **4** may be removed in a notch shape. Thus, the MISFET structure (see FIG. **8**B) of the modified embodiment of the third embodiment can be realized in a simple manner.

In this embodiment, a target thickness for reduction in the thickness of the part of the high dielectric constant gate insulating film **4** located in the external side to the gate electrode **5** is not particularly limited either under the offset sidewall **6** or under the sidewall **7**. However, for example, when an HfSiON film is used as the high dielectric constant gate insulating film **4**, to suppress increase in a capacitance between a gate and a grain, the thickness of part of the high dielectric constant gate insulating film **4** located in the external side to the gate electrode **5** is preferably reduced to about 2 nm or less.

Eighth Embodiment

Hereafter, a method for fabricating a semiconductor device according to an eighth embodiment of the present invention will be described with reference to the accompanying drawings. In this embodiment, description will be made using a method for fabricating an n-type MISFET as an example. FIGS. **14**A through **14**G and FIGS. **15**A through **15**D are cross-sectional views illustrating respective steps for fabricating a semiconductor device according to the eighth embodiment.

First, as shown in FIG. **14**A, for example, a STI **3** which is to be an isolation region is selectively formed on a substrate **1** of, for example, silicon and then, for example, B is ion implanted into the substrate **1** at an implantation energy of 300 keV and a dose of 1×10^{13} cm^{-2}. Thus, a p-type well **2** which is to be an active region is formed. Subsequently, ion implantation (of B at an implantation energy of 150 keV and a dose of 1×10^{13} cm^{-2}) for punch-through stopper formation and ion implantation (of B at an implantation energy of 20 keV and a dose of 5×10^{12} cm^{-2}) for channel formation are performed.

Next, as shown in FIG. **14**B, as a buffer insulating film, for example, a silicon oxide film (not shown) is formed on the active region of the p-type well **2** surrounded by the STI **3** so as to have a thickness of about 0.5 nm and then, as a high dielectric constant film **4**, for example, a HfSiON film is deposited thereon to a thickness of about 4 nm (i.e., about 1 nm in terms of an equivalent oxide thickness).

Next, as shown in FIG. **14**C, as a gate electrode material film **5**A, for example, a polysilicon film is formed on the high dielectric constant gate insulating film **4** so as to have a thickness of about 100 nm, and then as a cover film (protective film) **15**, for example, a silicon oxide film is deposited over the gate electrode material film **5**A to a thickness of about 10 nm.

UMC1001
UMC v. AICP

Next, a resist pattern (not shown) is formed on the cover film **15** so as to cover a gate electrode formation region, and then the cover film **15** and the gate electrode material film **5**A are etched in this order using the resist pattern as a mask, thereby forming, as shown in FIG. **14**D, a gate electrode **5** with its upper surface covered by the cover film **15**. Thereafter, part of the high dielectric constant gate insulating film **4** located in the external side to the gate electrode **5** is removed by a thickness of about 2 nm by selective etching. Thus, a thickness of part of the high dielectric constant gate insulating film **4** located in the external side to the gate electrode **5** can be reduced so that a remaining thickness of the part of the high dielectric constant gate insulating film **4** becomes about 2 nm.

Next, an insulating film is deposited over the substrate **1** to a thickness of about 10 nm, and then the insulating film is etched back to form, as shown in FIG. **14**E, an insulating offset sidewall **6** on each side surface of the gate electrode **5**. Thereafter, part of the high dielectric constant gate insulating film **4** located in the external side to the offset sidewall **6** is removed, for example, by wet etching using hydrofluoric acid or the like or selective dry etching. Subsequently, using the gate electrode **5** and the offset sidewall **6** as a mask, for example, As is ion implanted into the substrate **1** at an implantation energy of 2 keV and a dose of 1×10^{15} cm^{-2}, thereby forming an n-type extension region **10**. Thereafter, using the gate electrode **5** and the offset sidewall **6** as a mask, for example, B is ion implanted into the substrate **1** at an implantation energy of 10 keV and a dose of 3×10^{13} cm^{-2}, thereby forming a p-type pocket region **11**.

Next, an insulating film (for example, a SiN film) is deposited over the substrate **1** to a thickness of about 50 nm, and then the insulating film is etched back to form, as shown in FIG. **14**F, an insulating sidewall **7** on each side surface of the gate electrode **5** with the offset sidewall **6** interposed therebetween.

Next, using the gate electrode **5**, the offset sidewall **6** and the sidewall **7** as a mask, for example, As is ion implanted into the substrate **1** at an implantation energy of 10 keV and a dose of 5×10^{15} cm^{2}, and then, for example, spike RTA (rapid thermal annealing) is performed at a temperature of about 1050° C., thereby activating the implanted impurity. Thus, as shown in FIG. **14**G, n-type source/drain regions **12** are formed.

Next, a metal film (for example, a Ni film) is deposited over the substrate **1** to a thickness of about 10 nm, and RTA is performed to bring a silicon portion of the substrate **1** and the metal film into reaction. Thus, as shown in FIG. **15**A, a silicide layer **13** is formed on the n-type source/drain regions **12**. Thereafter, unreacted part of the metal film which remains on the substrate **1** is exfoliated or removed.

Next, as shown in FIG. **15**B, an interlayer insulating film **14** is deposited over the substrate **1** as well as the gate electrode **5** to a thickness of about 400 nm.

Next, as shown in FIG. **15**C, the interlayer insulating film **14** is polished, for example, by CMP (chemical mechanical polishing) so that a surface of the interlayer insulating film **14** becomes at the same level as the upper surface of the cover film **15**, and then the exposed cover film **15** is removed by etching. In this case, respective upper portions of the interlevel insulating film **14** which has undergone through CMP and the offset sidewall **6** are also removed.

Next, a metal film (for example, a Ni film) is deposited over the substrate **1** to a thickness of about 100 nm, and then RTA is performed to bring a silicon portion of the gate electrode **5** and the metal film into reaction. Thus, as shown in FIG. **15**D, a fully silicided gate electrode **16** (obtained by siliciding the entire region over the high dielectric constant gate insulating film **4**) is formed.

According to the above-described fabrication method of this embodiment, the MISFET structure (see FIG. **2**) of the second embodiment using a FUSI (full silicide) structure can be realized in a relatively simple manner.

In this embodiment, when the offset sidewall **6** has been formed and then part of the high dielectric constant gate insulating film **4** located in the external side to the offset sidewall **6** is removed, for example, by wet etching using hydrofluoric acid or the like, part of the high dielectric constant gate insulating film **4** located under each side end portion of the offset sidewall **6**, i.e., each side portion of the high dielectric constant gate insulating film **4** may be removed in a notch shape so that a notch is provided. Thus, the MISFET structure (see FIG. **7**) of the first modified example of the second embodiment using a FUSI structure can be realized in a simple manner.

In this embodiment, a target thickness for reduction in the thickness of the part of the high dielectric constant gate insulating film **4** located in the external side to the gate electrode **5** is not particularly limited. However, for example, when an HfSiON film is used as the high dielectric constant gate insulating film **4**, to suppress increase in a capacitance between a gate and a grain, the thickness of part of the high dielectric constant gate insulating film **4** located in the external side to the gate electrode **5** is preferably reduced to about 2 nm or less (so that a surface of the substrate **1** is not exposed).

In this embodiment, after the offset sidewall **6** has been formed, part of the high dielectric constant gate insulating film **4** located in the external side to the offset sidewall **6** is removed, and then ion implantation for forming the n-type extension region **10** and the p-type pocket region **11** is performed. However, instead of performing these process steps, ion implantation for forming the n-type extension region **10** and the p-type pocket region **11** may be performed after the offset sidewall **6** is formed and with part of the high dielectric constant gate insulating film **4** having a reduced thickness remaining in the outer side offset sidewall **6**. Even in this manner, according to this embodiment, the part of the high dielectric constant gate insulating film **4** located in the external side to the offset sidewall **6** has a reduced thickness, so that increase in acceleration energy can be suppressed. Accordingly, a shallow junction can be formed in the n-type extension region **10** in a simple manner and thus device characteristics can be improved in a simple manner. In this case, ion implantation for forming an extension region and a pocket region of an MISFET having a different channel type or another power supply system and formed on the same substrate may be performed after ion implantation for forming the n-type extension region **10** and the p-type pocket region **11** and then removal of the part of the high dielectric constant gate insulating film **4** located in the external side to the offset sidewall **6**.

In this embodiment, the MISFET structure of the second embodiment using a FUSI structure has been formed. However, instead of forming the MISFET structure of the second embodiment, the MISFET structure of the first embodiment, the modified example of the first embodiment, each of the

modified examples of the second embodiment, the third embodiment, the modified example of the third embodiment, the fourth embodiment or the modified example of the fourth embodiment may be formed using a FUSI structure.

In each of the first through eighth embodiments, a single layer structure of a SiN film has been used as an example of the sidewall **7**. However, instead of the single layer structure of a SiN film, for example, a double layer structure of a combination of an oxide film (SiO_2 film) and a nitride film (SiN film) (for example, including a SiO_2 layer as an lower layer and a SiN film as an upper layer), a triple layer structure (for example including an SiO_2 film as a lower layer, a SiN film as a middle layer and a SiO_2 film as an upper layer) or the like may be used.

In each of the first through eighth embodiments, instead of the n-type extension region **10**, a LDD may be formed.

In each of the fifth through eighth embodiments, instead of the n-type MISFET, a p-type MISFET may be formed.

In each of the fifth through eighth embodiments, to prevent deterioration of the interface of a gate insulating film and a gate electrode, a buffer insulating film may be formed between the gate electrode **5** and the high dielectric constant gate insulating film **4** so as to have a thickness of about 0.2 nm.

In each of the first through eighth embodiments, a shape of each side surface of the high dielectric constant gate insulating film **4** in which the notch **20** is provided in the part located under each side end portion of the sidewall **7** or the offset sidewall **6** is not limited to a semicircular shape shown in FIG. **6**, **7**, **8** or **10**. For example, each side surface of the high dielectric constant gate insulating film **4** may be a perpendicular plane to the substrate surface. That is, a side surface of the high dielectric constant gate insulating film **4** may be located at a predetermined distance from a side end surface of the sidewall **7** or the offset sidewall **6** toward the gate electrode **5**.

What is claimed is:

1. A semiconductor device comprising:

a high dielectric constant gate insulating film formed on an active region in a substrate;

a gate electrode formed on the high dielectric constant gate insulating film; and

an insulating sidewall formed on each side surface of the gate electrode,

wherein the high dielectric constant gate insulating film is continuously formed so as to extend from under the gate electrode to under the insulating sidewall,

at least part of the high dielectric constant gate insulating film located under the insulating sidewall has a smaller thickness than a thickness of part of the high dielectric constant gate insulating film located under the gate electrode,

the insulating sidewall includes a first insulating sidewall formed on a side surface of the gate electrode and a second insulating sidewall formed on the side surface of the gate electrode with the first insulating sidewall interposed therebetween,

the high dielectric constant gate insulating film is continuously formed so as to extend from under the gate electrode to under the first insulating sidewall, and

part of the high dielectric constant gate insulating film located under the first insulating sidewall has a smaller thickness than a thickness of part of the high dielectric constant gate insulating film located under the gate electrode.

2. The semiconductor device of claim **1**, wherein the high dielectric constant gate insulating film is formed so as not to be located under the second insulating sidewall.

3. The semiconductor device of claim **1**, wherein the high dielectric constant gate insulating film is continuously formed so as to extend to under the second insulating sidewall, and

part of the high dielectric constant gate insulating film located under the second insulating sidewall has the same thickness as a thickness of part of the high dielectric constant gate insulating film located under the first insulating sidewall.

4. The semiconductor device of claim **1**, wherein the high dielectric constant gate insulating film is continuously formed so as to extend from under the gate electrode to under the second insulating sidewall, and

part of the high dielectric constant gate insulating film located under the second insulating sidewall has a smaller thickness than a thickness of part of the high dielectric constant gate insulating film located under the first insulating sidewall.

5. A semiconductor device comprising:

a high dielectric constant gate insulating film formed on an active region in a substrate;

a gate electrode formed on the high dielectric constant gate insulating film; and

an insulating sidewall formed on each side surface of the gate electrode,

wherein the high dielectric constant gate insulating film is continuously formed so as to extend from under the gate electrode to under the insulating sidewall,

at least part of the high dielectric constant gate insulating film located under the insulating sidewall has a smaller thickness than a thickness of part of the high dielectric constant gate insulating film located under the gate electrode,

the insulating sidewall includes a first insulating sidewall formed on a side surface of the gate electrode and a second insulating sidewall formed on the side surface of the gate electrode with the first insulating sidewall interposed therebetween,

the high dielectric constant gate insulating film is continuously formed so as to extend from under the gate electrode to under the second insulating sidewall,

part of the high dielectric constant gate insulating film located under the first insulating sidewall has the same thickness as a thickness of part of the high dielectric constant gate insulating film located under the gate electrode, and

part of the high dielectric constant gate insulating film located under the second insulating sidewall has a smaller thickness than a thickness of part of the high dielectric constant gate insulating film located under the gate electrode.

6. The semiconductor device of claim **1**, wherein the high dielectric constant gate insulating film includes a notch at a side end portion.

7. The semiconductor device of claim **1**, further comprising a buffer insulating film between the substrate and the high dielectric constant gate insulating film.

8. The semiconductor device of claim **7**, wherein the buffer insulating film is a silicon oxide film or a silicon oxynitride film.

9. The semiconductor device of claim **1**, wherein the gate electrode is a fully silicided gate electrode of which an entire region has been silicided.

10. The semiconductor device of claim **5**, wherein the high dielectric constant gate insulating film includes a notch at a side end portion.

11. The semiconductor device of claim **5**, further comprising a buffer insulating film between the substrate and the high dielectric constant gate insulating film.

12. The semiconductor device of claim **11**, wherein the buffer insulating film is a silicon oxide film or a silicon oxynitride film.

13. The semiconductor device of claim **5**, wherein the gate electrode is a fully silicided gate electrode of which an entire region has been silicided.

14. The semiconductor device of claim **1**, wherein the high dielectric constant gate insulating film is formed of a Hf based oxide.

15. The semiconductor device of claim **5**, wherein the high dielectric constant gate insulating film is formed of a Hf based oxide.

* * * * *

UNITED STATES PATENT AND TRADEMARK OFFICE

CERTIFICATE OF CORRECTION

PATENT NO. : 7,579,227 B2
APPLICATION NO. : 11/491260
DATED : August 25, 2009
INVENTOR(S) : Hirase et al.

It is certified that error appears in the above-identified patent and that said Letters Patent is hereby corrected as shown below:

On the Title Page:

The first or sole Notice should read --

Subject to any disclaimer, the term of this patent is extended or adjusted under 35 U.S.C. 154(b) by 246 days.

Signed and Sealed this

Fourteenth Day of September, 2010

David J. Kappos

David J. Kappos
Director of the United States Patent and Trademark Office