US 20040110352A1

(19) United States

(12) Patent Application Publication

(10) Pub. No.: US 2004/0110352 A1

(43) Pub. Date: Jun. 10, 2004

Bu et al.

(54) SOURCE DRAIN AND EXTENSION DOPANT CONCENTRATION

(75) Inventors: **Haowen Bu**, Plano, TX (US); **Amitabh Jain**, Allen, TX (US); **Wayne A. Bather**, Richardson, TX (US); **Stephanie Watts Butler**, Richardson, TX (US)

Correspondence Address:
TEXAS INSTRUMENTS INCORPORATED
P O BOX 655474, M/S 3999
DALLAS, TX 75265

(73) Assignee: **Texas Instruments Incorporated**

(21) Appl. No.: **10/316,468**

(22) Filed: **Dec. 10, 2002**

Publication Classification

(51) **Int. Cl.**[7] **H01L 21/336**

(52) **U.S. Cl.** **438/305**

(57) **ABSTRACT**

A method of forming a semiconductor device includes forming one or more sidewall spacer layers on the outer surface of a gate stack. At least one region of an at least partially formed semiconductor device is doped. First and second sidewall bodies are formed on opposing sides of the gate stack. The formation of the first and second sidewall bodies includes forming a first sidewall-forming layer on the outward surface of the gate stack and the sidewall spacer layers, exposing the semiconductor device to a heating cycle in a single wafer reactor, and forming a second sidewall-forming layer on the outward surface of the first sidewall-forming layer. The formation of the second sidewall-forming layer occurs in an environment that substantially minimizes dopant loss and deactivation in the at least one region of the partially formed semiconductor device.

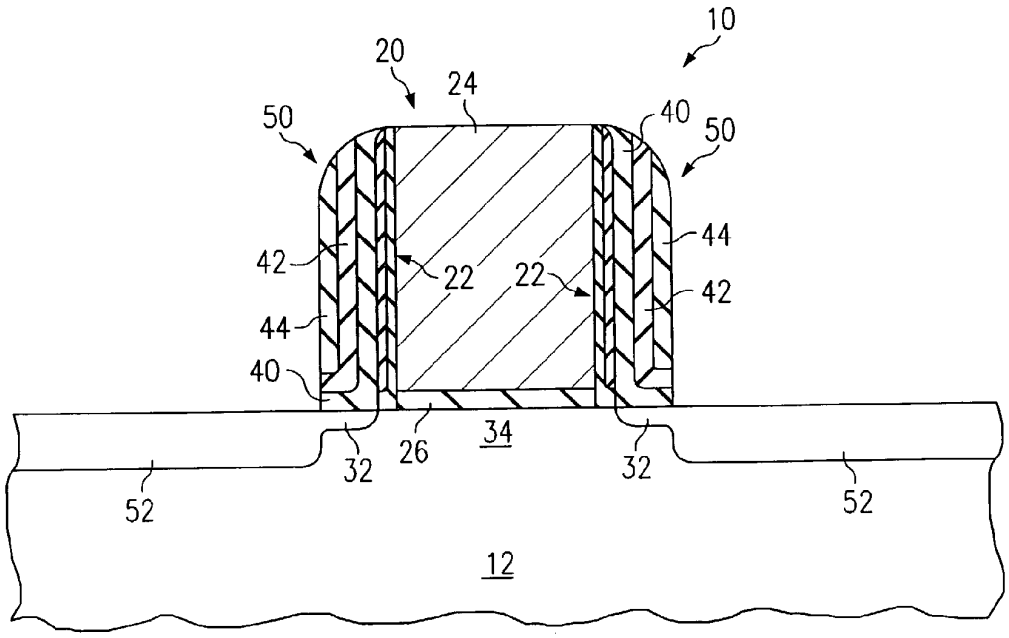

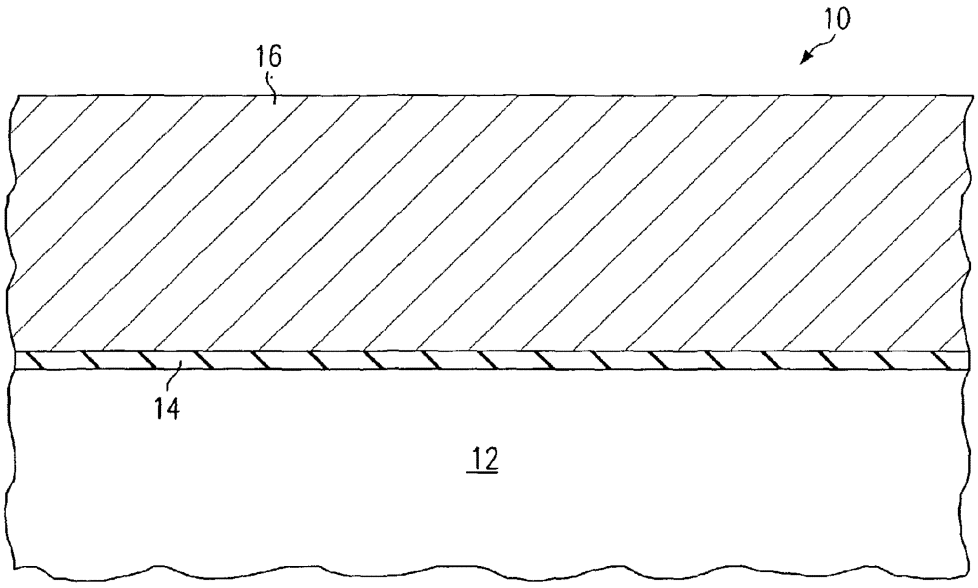

FIG. 1A

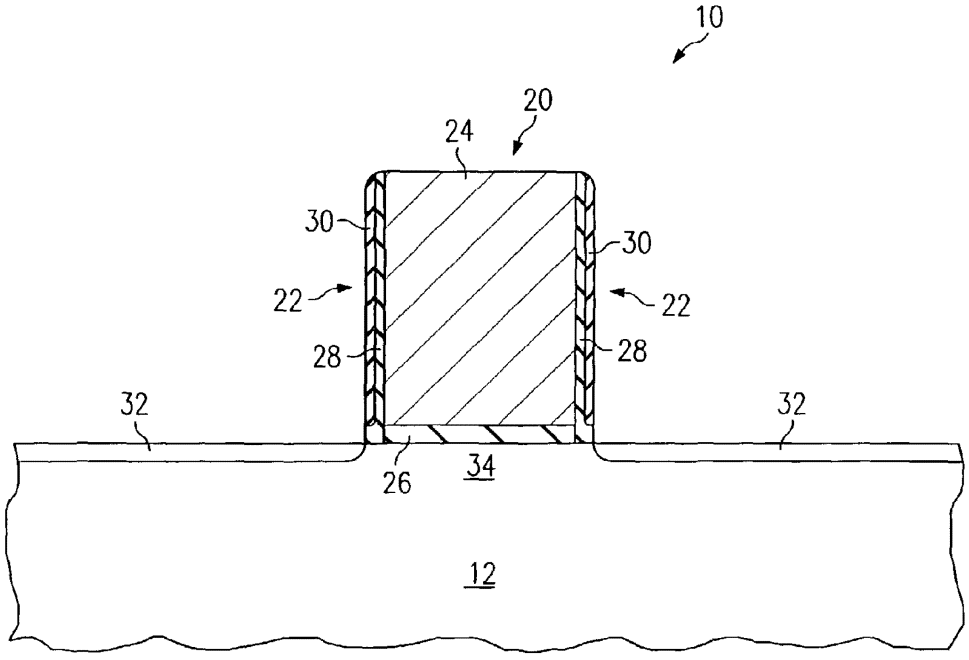

FIG. 1B

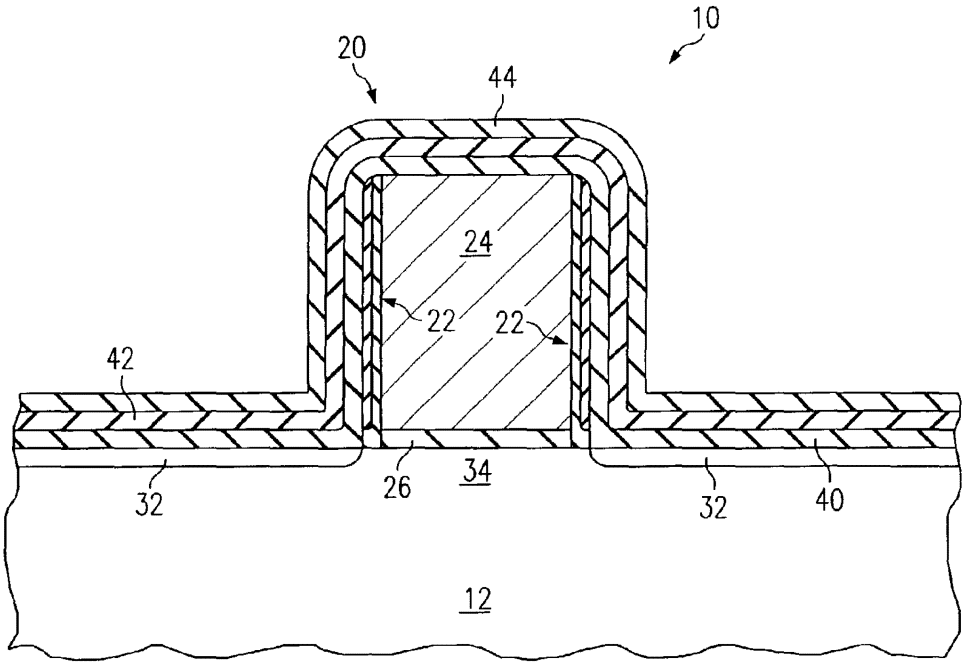
10
20
44
24
22
22
42
32
26
34
32
40
12

FIG. 1C

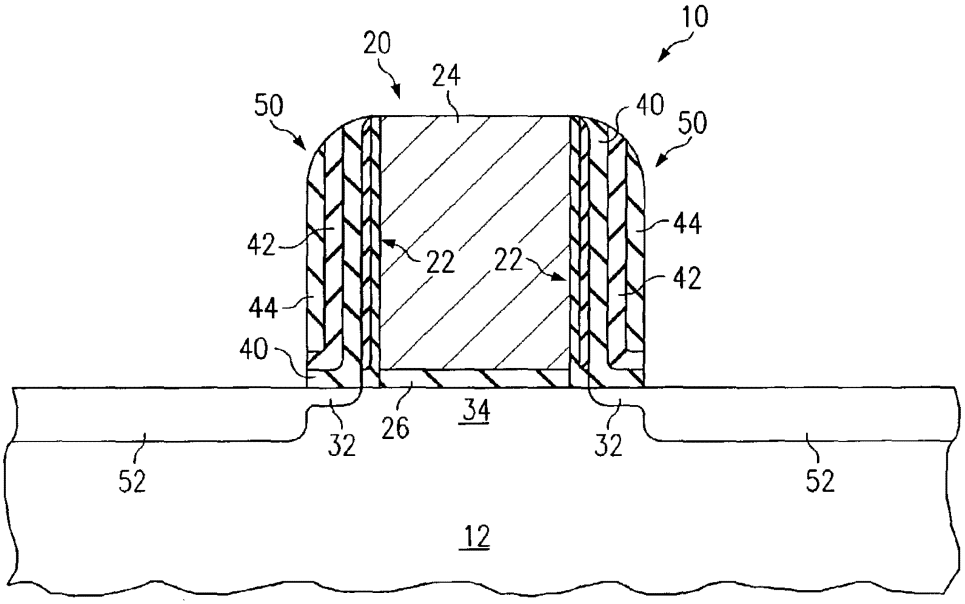
10
20
24
50
40
50
42
22
22
44
42
44
40
32
26
34
32
52
52
12

FIG. 1D

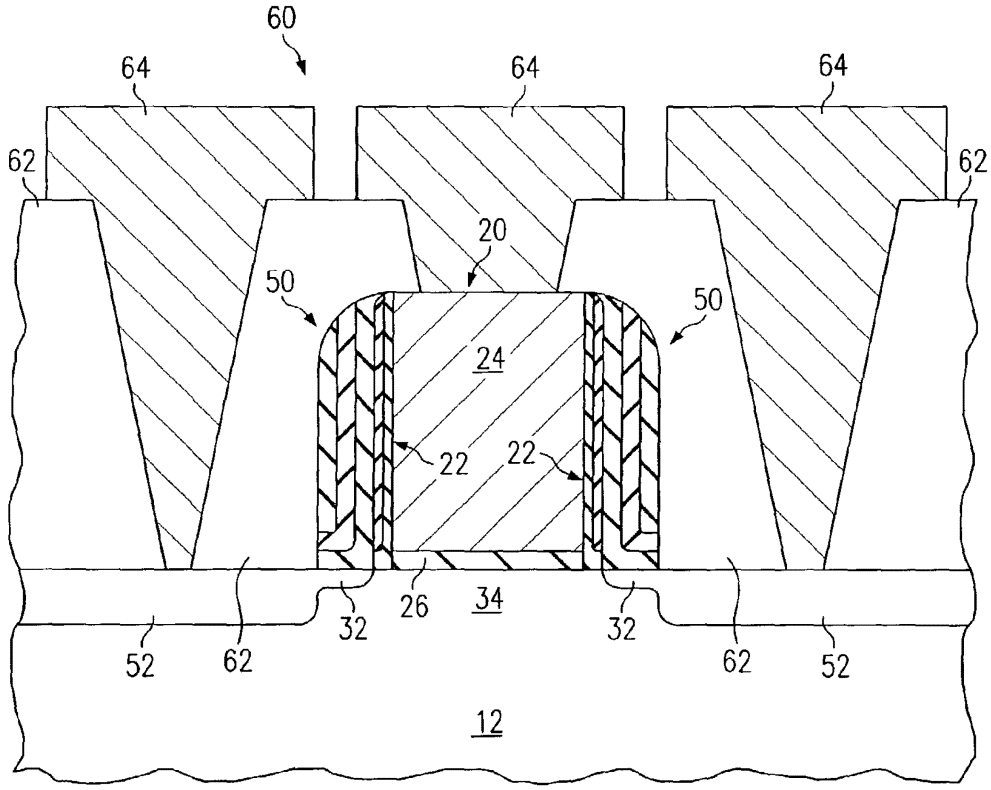
60
64
64
64
62
62
20
50
50
24
22
22
26
34
32
32
52
62
62
52
12

FIG. 1E

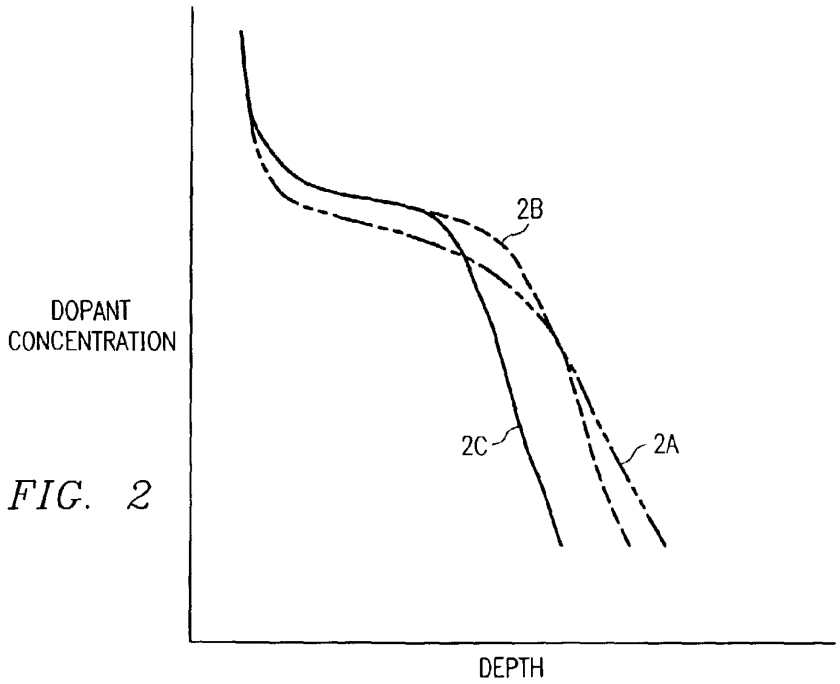
2B
DOPANT
CONCENTRATION
2C
2A
DEPTH

FIG. 2

SOURCE DRAIN AND EXTENSION DOPANT CONCENTRATION

BACKGROUND OF THE INVENTION

[0001] During the fabrication of certain types of semiconductor devices, extension and source drain regions may be sequentially implanted on either side of a gate stack formed on the surface of a semiconductor substrate. The area of the semiconductor substrate that lies between opposing source drain and source drain extension regions is a channel region. The source drain and source drain extension regions include a high concentration of dopant. High temperature processes, such as annealing, however, may cause the lateral migration of dopant species within the source drain and source drain extension regions and reduce the length of the channel region or otherwise degrade the performance of the device. Typically, the amount of lateral migration is proportional to junction depth of the source drain regions and may be approximately sixty percent of the junction depth.

[0002] Spacer layers can mask portions of the semiconductor device during formation of doped regions. Conventional methods of forming the spacer layers, however, often lead to dopant loss and degradation of a doped semiconductor gate and/or doped drain and source drain extension regions. Dopant loss and degradation can lead to an increase in sheet resistance and a lower semiconductor device drive current.

SUMMARY OF EXAMPLE EMBODIMENTS

[0003] In accordance with the present invention, disadvantages and problems associated with methods of forming spacer layers are reduced or eliminated.

[0004] According to one embodiment of the present invention, a method for forming a semiconductor device is disclosed which includes forming one or more sidewall spacer layers on the outer surface of a gate stack. At least one region of an at least partially formed semiconductor device is doped. First and second sidewall bodies are formed on opposing sides of the gate stack. The formation of the first and second sidewall bodies includes forming a first sidewall-forming layer on the outward surface of the gate stack and the sidewall spacer layers, exposing the semiconductor device to a short heating cycle in a single wafer reactor, and forming a second sidewall-forming layer on the outward surface of the first sidewall-forming layer. The formation of the second sidewall-forming layer occurs in an environment that substantially minimizes dopant loss and deactivation in the at least one region of the partially formed semiconductor device.

[0005] Depending on the specific features implemented, particular embodiments of the present invention may exhibit some, none, or all of the following technical advantages. A technical advantage of one exemplary embodiment of the present invention is that dopant loss and deactivation in the gate and/or drain and extension areas of a semiconductor device may be minimized. Another technical advantage is that transistor drive current may be improved. Additionally or alternatively, the gate to substrate capacitance of the semiconductor device may be improved. Accordingly, the resulting semiconductor device will be more reliable and operate in a more efficient manner.

[0006] Other technical advantages may be readily apparent to one skilled in the art from the figures, descriptions and claims included herein. None, some, or all of the examples may provide technical advantages.

BRIEF DESCRIPTION OF THE DRAWINGS

[0007] For a more complete understanding of the present invention and its features and advantages, reference is now made to the following description, taken in conjunction with the accompanying drawings, in which:

[0008] **FIG. 1A** is a cross-sectional view of a semiconductor structure after the formation of multiple layers on an outer surface of a semiconductor substrate;

[0009] **FIG. 1B** is a cross-sectional view of the semiconductor structure after the formation of a gate stack and a sidewall spacer on the outer surface of the semiconductor structure;

[0010] **FIG. 1C** is a cross-sectional view of the semiconductor structure after the formation of multiple layers on the outer surface of the gate stack and sidewall spacers;

[0011] **FIG. 1D** is a cross-sectional view of the semiconductor structure after the formation of source drain regions in the surface of the semiconductor structure; and

[0012] **FIG. 1E** is a cross-sectional view of a transistor formed in accordance with the teachings of the present invention.

[0013] **FIG. 2** is a schematic drawing illustrating the effect of varying sidewall spacer films on dopant depth profiles.

DETAILED DESCRIPTION OF EXAMPLE EMBODIMENTS

[0014] In order to form an integrated circuit device such as a field effect transistor, various conductive and nonconductive layers are typically deposited or grown on a semiconductor substrate or other outer semiconductor layer. **FIGS. 1A through 1E** are cross-sectional views showing one example of a method of forming a portion of semiconductor structure **10**. Semiconductor structure **10** may be used as a basis for forming any of a variety of semi-conductor devices, such as a bipolar junction transistor, a NMOS transistor, a PMOS transistor, a CMOS transistor, a diode, a capacitor, or other semiconductor based device. Particular examples and dimensions specified throughout this document are intended for exemplary purposes only, and are not intended to limit the scope of the present disclosure. Moreover, the illustration in **FIGS. 1A through 1E** are not intended to be to relative scale. Conventional semiconductor fabrication techniques for forming sidewall spacers include high thermal budget processes that may cause the diffusion and lateral migration of dopant in the various regions of the semiconductor device. Such diffusion and migration may cause increased junction capacitance, diode leakage, and/or increased source gate and drainage capacitance. According to various embodiments, however, the affects of dopant diffusion and migration may be greatly reduced or substantially limited.

[0015] **FIG. 1A** is a cross-sectional view of semiconductor structure **10** after the formation of multiple layers on an outer surface of a semiconductor substrate **12**. A gate insulator layer **14** is formed outwardly from semiconductor

UMC 1025
UMC v. AICP

substrate **12**, and a gate conductor layer **16** is formed outwardly from gate insulator layer **14**. Although gate insulator layer **14** and gate conductor layer **16** are shown as being formed without interfacial layers between them, such interfacial layers could alternatively be formed without departing from the scope of the present disclosure. Semiconductor substrate **12** may comprise any suitable material used in semiconductor chip fabrication, such as silicon, germanium, gallium arsenide, or other suitable semiconductive material. For purposes of teaching aspects of the present invention, an exemplary embodiment will be described that uses a substrate **12** comprising silicon.

[**0016**] In various embodiments, gate insulator layer **14** may comprise layers of silicon dioxide, silicon nitride, or combination thereof. Gate insulator layer **14** may be formed outwardly on the surface of semiconductor substrate **12** using any of a variety of processes. For example, gate insulator layer **14** may be formed by growing an oxide or nitrided oxide layer. In various embodiments, gate insulator layer **14** comprises a grown oxide with a thickness on the order of approximately 8 to 100 Angstroms. As oxide is grown on the surface of substrate **12**, a portion of substrate **12** is consumed. Following the oxidation process, nitrogen can be incorporated into gate insulator layer **14** through plasma or thermal nitridation.

[**0017**] Gate conductor layer **16** is formed outwardly on the surface of gate insulator layer **14** and may comprise a layer of amorphous silicon or alloy, polycrystalline silicon or alloy, or other appropriate conductive material used in the fabrication of semiconductor structures. Gate conductor layer **16** may be formed by any of a variety of techniques including chemical vapor deposition (CVD) and physical vapor deposition (PVD). For example, gate conductor layer **16** may be formed by depositing a desired amount of polycrystalline silicon over the gate insulator layer **14**. In particular embodiments, it may be desirable that gate conductor layer **16** is on the order of 1000 to 1600 Angstroms in thickness.

[**0018**] In some embodiments, after forming gate conductor layer **16**, gate conductor layer **16** may be doped to increase gate conductance. The implant species used to dope gate conductor layer **16** depends at least in part on the conductivity type of the active area formed within semiconductor substrate **12**. In one particular embodiment, the active area formed within substrate **12** comprises an n-type well. In that embodiment, gate conductor layer **16** is doped using an p-type implant.

[**0019**] At some point, a gate stack may be formed from gate insulator layer **14** and gate conductor layer **16**. **FIG. 1B** is a cross-sectional view of semiconductor structure **10** after the formation of a gate stack **20** and a sidewall spacer **22** on the outer surface of semiconductor structure **10**. The gate includes a gate conductor **24** and a gate insulator **26**. The formation of semiconductor gate stack **20** may be effected through a variety of processes. For example, semiconductor gate stack **20** may be formed by patterning and etching gate conductor layer **16** and gate insulator layer **14** using suitable photolithographic methods including photo resist mask and anisotropic etch techniques. In particular embodiments, gate stack **20** has a width on the order of approximately 240 to 600 Angstroms and a height of approximately 1600 Angstroms. It is recognized, however, that gate stack **20** may be of any appropriate dimensions suitable for the fabrication of semiconductor structures.

[**0020**] After the etching or patterning of gate conductor layer **16** and gate insulator layer **14** to form gate stack **20**, a sidewall spacer **22** is formed proximate to the sidewalls of gate stack **20**. According to particular embodiments, sidewall spacer **22** includes an intermediate layer **28** and a spacer layer **30**. Although intermediate layer **28** and spacer layer **30** are shown as being formed without interfacial layers between them, such interfacial layers could alternatively be formed without departing from the scope of the present disclosure. Further, it is also recognized that sidewall spacer **22** may comprise only spacer layer **30**, and in certain embodiments, intermediate layer **28** may be omitted. Where included, intermediate layer **28** may comprise a thin layer and may comprise oxide, oxi-nitride, silicon dioxide, or other suitable material used in the fabrication of semiconductor devices. In particular embodiments, intermediate layer **28** comprises silicon dioxide with a thickness on the order of 50 Angstroms. Forming intermediate layer **28** may be affected through any of a variety of processes. For example, intermediate layer **28** can be formed by thermally growing an oxide. Using a grown oxide as intermediate layer **28** may be advantageous in providing a mechanism for removing surface irregularities in substrate **12** and gate conductor **24** created during the formation of gate stack **20**.

[**0021**] Spacer layer **30** may comprise any dielectric material, such as, for example, nitride, silicon nitride, oxide, oxi-nitride, silicon dioxide, or any other suitable material used in semiconductor fabrication. In various embodiments, intermediate layer **28** comprises a dielectric material that is selectively etchable from spacer layer **30**. That is, each of intermediate layer **28** and spacer layer **30** can be removed using an etching that does not significantly affect the other. For example, intermediate layer **28** may comprise a layer of oxide while spacer layer **30** may comprise, for example, nitride. In this example, spacer layer **30** comprises nitride with a thickness on the order of 50 Angstroms. Forming spacer layer **30** may be affected, for example, by depositing a dielectric material outwardly from intermediate layer **28**.

[**0022**] After the formation of intermediate layer **28** and spacer layer **30**, sidewall spacers indicated generally at **22** are formed on opposite sides of gate stack **20** by anisotropically etching intermediate layer **28** and offset layer **30**. In one particular embodiment, portions of intermediate layer **28** and offset layer **30** are removed by performing a suitable plasma etch process. At some point, after sidewall spacers **22** are formed, source drain extension regions **32** of semiconductor structure **10** are created near the outer surface of substrate **12**. In various embodiments, source drain extension regions **32** may comprise a relatively low doping concentration of boron, phosphorous, and/or arsenic dopants. Source drain extension regions **32** may be formed by low-energy ion implantation, low-energy diffusion, or by any other appropriate technique for doping substrate **12**. Extension areas **32** may be formed, for example, prior to removal of portions of intermediate layer **28** and offset layer **30**. In other embodiments, extension areas **32** may be formed after removal of at least a portion of intermediate layer **28** and offset layer **30**. Forming extension areas **32** prior to removal of intermediate layer **28** is advantageous in minimizing damage to semiconductor substrate **12** during

the formation of extension areas **32** by substantially preventing implant channeling in substrate **12**. Forming extension areas **32** after removing intermediate layer **28**, however, may result in a lower parasitic resistance as intermediate layer **28** may trap dopant and cause dopant loss.

[**0023**] The implantation of the dopants is self-aligned with respect to the outer edge of sidewall spacer **22**. Thus, prior to high temperature processes, source drain extension regions **32** initiate from points within substrate **12** that correspond approximately with the outward edges of sidewall spacers **22**. Source drain extension regions **32** are separated by channel region **34** also defined in semiconductor substrate **12**. At some point after formation, however, source drain extension regions **32** are activated by annealing semiconductor structure **10**. The anneal step may be achieved using various parameters, such as a rapid thermal anneal (RTA) at a temperature on the order of approximately 900° C. to 950° C. for approximately 1 to 5 seconds.

[**0024**] Annealing and other high temperature processes may result in the lateral migration of each extension region **32** toward the opposing extension region **32**. Thus, source drain extension regions **32** may migrate toward one another beneath gate stack **20**, and the distance between opposing source drain extension regions **32** may be decreased. For example, under some high temperature processes, each extension region **32** may migrate laterally a distance of approximately sixty percent of a junction depth associated with the extension region **32**. By one common measure, the junction depth of each extension region **32** corresponds to the point within substrate **12** at which the concentration of dopant is approximately 1E18 ions/cm^3. For example, if the junction depth for an extension region **32** is approximately 167 Angstroms as measured from the outward surface of substrate **12**, the extension region **32** can be expected to migrate laterally a distance of approximately 100 Angstroms. If both source drain extension regions **32** on either side of gate stack **20** migrate laterally a distance of approximately 100 Angstroms, channel region **34** is reduced in length by approximately 200 Angstroms.

[**0025**] As semiconductor fabrication technology improves, overall device dimensions can be decreased and the width of gate stacks **20** is continually decreased. Accordingly, the decrease in length of channel region **34** caused by the lateral migration of source drain extension regions **32** becomes more critical as the width of gate stack **20** is reduced. If, for example, the width of gate stack **20** and, consequently, the length of channel region **34** is approximately 240 Angstroms and each extension region **32** laterally migrates approximately 100 Angstroms, the length of channel region **34** is reduced to approximately 40 Angstroms. The shorter channel regions **34** increase the transistor off-state leakage current and may eventually result in a short circuit between the source and drain of a device. An overlap of opposing source drain extension regions **32** beneath gate stack **20** gives rise to source gate and drain gate capacitance. The formation of sidewall spacers **22** on either sides of gate stack **20** prior to the implantation of extension regions **32**, however, increases the distance that source drain extension regions **32** may migrate laterally before affecting transistor off-state leakage. As a result, the reduction in the length of the channel due to dopant diffusion and lateral migration during more aggressive high temperature processes, such as annealing, may be substantially alleviated by the use of spacers.

[**0026**] **FIG. 1C** is a cross-sectional view of semiconductor structure **10** after formation of multiple layers on the outer surface of gate stack **20** and sidewall spacers **22**. In the illustrated embodiment, the layers formed on the outer surface of gate stack **20** and sidewall spacers **22** include a first sidewall-forming layer **40**, a second sidewall-forming layer **42**, and a third sidewall-forming layer **44**. The processes used to form each layer minimizes parasitic resistance, reduces junction depth, and minimizes lateral migration of extension region **32** by reducing the thermal budget associated with semiconductor structure **10**. For example, the duration of heat cycles that a semiconductor structure **10** is subjected to may be reduced. In particular embodiments, various sidewall forming layers may be formed in environments lowering the thermal budget. Additionally or alternatively, the film properties of sidewall-forming layers **40** and **42** may minimize dopant loss from source drain extension region **32** to first sidewall-forming layer **40**. Accordingly, parasitic resistance may be lowered.

[**0027**] According to particular embodiments, sidewall spacers **22** may include a first sidewall-forming layer **40** deposited outwardly on the surface of gate stack **20**, sidewall spacers **22**, and substrate **12**. First sidewall-forming layer **40** may comprise, for example, oxide, oxi-nitride, silicon dioxide, nitride, or any other appropriate dielectric material. In this particular example, first sidewall-forming layer **40** comprises oxide with a thickness of approximately 50-300 Angstroms. First sidewall-forming layer **40** may be formed using any of a variety of processes. For example, first sidewall-forming layer **40** may be formed by depositing an oxide on the surface of gate stack **20** using conventional vapor deposition processes. Vapor deposition processes usually take place within a vacuum chamber and may include chemical or physical vapor deposition.

[**0028**] Using conventional semiconductor formation techniques, a semiconductor structure is typically placed in a furnace with other similar semiconductor structures after the deposition of a first sidewall-forming layer. In the furnace, the semiconductor structures undergo an extended heating process that typically lasts approximately three to four hours. The extensive duration of the batch heating process is due to the amount of time required to uniformly heat the batch of semiconductor structures to the desired temperature. The extensive duration of the batch heating process may also be due to a relatively low deposition rate with the precursors used. For example, a batch of semiconductor structures may be heated for approximately three to four hours to complete the deposition process at a temperature on the order of 600 to 800° C.

[**0029**] Because dopant implanted into a substrate during the formation of the source drain extension regions migrates both vertically and laterally during high temperature processes, the dopant profile of a substrate maybe altered during batch heating processes. Thus, it is desirable to reduce the temperature and duration of heating cycles performed on semiconductor structures after the deposition of the first sidewall-forming layer. According to particular embodiments, semiconductor structure **10** may be placed in a single wafer reactor. Because semiconductor structure **10** is placed

in a single wafer reactor, the temperature and duration of the heating cycle may be substantially reduced. In particular embodiments, using such single wafer processes, semiconductor structures **10** may be heated to a temperature on the order of 600 to 700° C. using silane (or disilane) and nitrous oxide for approximately one to two minutes. In this manner, the thermal budget associated with the formation of first sidewall-forming layer **40** is reduced. Consequently, the lateral and vertical migration of dopant implanted in substrate **12** may be reduced. In alternative embodiments, a lower thermal budget may be achieved by lowering the deposition temperature and rate during a batch process with tetraethylorthosilicate (TEOS) or another suitable precursor. The lowering of deposition temperatures, however, generally leads to a higher hydrogen content in first sidewall-forming layer **40**. Higher hydrogen content may result in increased dopant loss from source drain extension region **32**.

[**0030**] Second sidewall-forming layer **42** is formed outwardly on the surface of first sidewall-forming layer **40**. Second sidewall-forming layer **42** may comprise any dielectric material such as, for example, nitride, silicon nitride, oxide, oxi-nitride, silicon dioxide, or other suitable dielectric material. In one particular example, second sidewall-forming layer **42** comprises nitride with a thickness of approximately 100-500 Angstroms. Using a nitride as the dielectric material of second sidewall-forming layer **42** is particularly advantageous in controlling the etching process. Second sidewall-forming layer **42** may be formed in any of a variety of techniques including conventional deposition processes. Conventional methods of forming sidewall layers, however, often lead to excessive dopant diffusion and deactivation due to the relatively high temperature needed to maintain a sufficient deposition rate of the dielectric material comprising second sidewall-forming layer **42**. Conventional methods may also lead to higher contents of unstable hydrogen in the nitride film. Upon source drain activation anneal, hydrogen may diffuse into the underlying first sidewall-forming layer **40** and promote dopant loss from source drain extension region **32** to first sidewall-forming layer **40**. In particular, conventional low pressure chemical vapor deposition (LPCVD) using a dichlorosilane (DCS) gas in the environment, typically requires a temperature of greater than 700° C. to maintain a sufficient deposition rate of the dielectric material. This high temperature imparts sufficiently high-energy to the dopants in substrate **12** to cause such dopants to migrate deeper into substrate **12** or into first sidewall-forming layer **40**. This migration of dopants may result in dopant loss and deactivation of the semiconductor gate.

[**0031**] Unlike conventional methods of forming spacer layers, according to the teachings of certain embodiments of the present invention, formation of second sidewall-forming layer **42** occurs in an environment that comprises a relatively low temperature, while maintaining a sufficient deposition rate of the dielectric material. Forming second sidewall-forming layer **42** in a relatively low temperature substantially minimizes dopant loss and deactivation of the semiconductor gate stack **20**. This lower temperature minimizes dopant migration. In addition to a decrease in the thermal budget, it may also be advantageous to form second sidewall-forming layer **42** of 15 to 35 percent carbon. Carbon in second sidewall-forming layer **42** may diffuse through first sidewall-forming layer **40** into source drain extension region **32** and aid in the retention of dopant in source drain extension region **32**. Carbon in second sidewall-forming layer **42** may also enhance the permeability of hydrogen in first and second sidewall-forming layers **40** and **42**. Higher hydrogen permeability allows for the reduction of hydrogen in layers **40** and **42** during a source drain activation anneal performed later in the process flow. Lower hydrogen content may lead to decreased dopant loss and lower parasitic sheet resistance in source drain extension region **32**. Improved depth profiles are described in greater detail below with regard to **FIG. 2**.

[**0032**] The environment in which second sidewall-forming layer **42** is formed may comprise ammonia and/or any precursors that include carbon. For example, the environment may include bistertiarybutylaminosilane (BTBAS). The environment may be such that a sufficient deposition rate of the dielectric material is maintained at relatively low temperatures. In some embodiments, formation of second sidewall-forming layer **42** occurs at a temperature of 700° C. or less. For example, adequate deposition rates can be achieved in these environments at temperatures of 600° C. or less, 550° C. or less, or 500° C. or less.

[**0033**] Another aspect of certain embodiments of the present invention recognizes that a sufficient deposition rate can be maintained during the formation of second sidewall-forming layer **42** in a relatively low temperature environment without causing significant migration of dopants in the device, which may lead to deactivated regions. In particular embodiments, deposition of second sidewall-forming layer **42** in a BTBAS environment lowers the thermal budget associated with the fabrication of semiconductor structure **10**. In particular embodiments where second sidewall-forming layer **42** includes carbon, carbon concentration may be varied in accordance with and as permitted by the particular deposition conditions.

[**0034**] In alternate embodiments of the present invention, an ammonia anneal step may be added prior to the deposition of first sidewall-forming layer **40**. The ammonia anneal step may be performed for approximately 5-30 seconds at a temperature on the order of 550 to 700° C. As a result, nitrogen may be incorporated at the interface between source drain extension region **32** and first sidewall-forming layer **40**. The nitrogen concentration may be dependent on the anneal temperature, the anneal duration, and/or the chemical oxide thickness of source drain extension region **32** prior to the deposition of first sidewall-forming layer **40**. In certain embodiments, the concentration of nitrogen may be on the order of 2 to 15 percent. It is recognized, however, that the concentration of interfacial nitrogen may be of any amount sufficient to limit dopant migration, both vertically and laterally. An improved dopant depth profile for sidewall-forming layers formed after an ammonia anneal are described in greater detail below with regard to **FIG. 2**.

[**0035**] Third sidewall-forming layer **44** is formed outwardly on the surface of second sidewall-forming layer **42** and may comprise, for example, oxide, oxi-nitride, silicon dioxide, nitride, or other appropriate dielectric material. In particular embodiments, the thickness of third sidewall-forming layer **44** may be on the order of approximately 300 to 1,000 Angstroms. Formation of third sidewall-forming layer **44** may be affected using any of a variety of processes. In particular embodiments, third sidewall-forming layer **44** comprises an oxide film formed on the surface of second sidewall-forming layer **42**. Although various chemical vapor

deposition techniques may be used to deposit the oxide, it is generally recognized that many other known techniques may be used to form third sidewall-forming layer **44**. In one example, third sidewall-forming layer **44** may be formed during a furnace batch process. The batch process may include an environment using tetraethylorthosilicate (TEOS) and oxygen at temperatures on the order of 550° to 700° C. In another example, third sidewall-forming layer **44** may be formed in a single wafer reactor. The environment in the single wafer reactor may include silane (or disilane) and nitrous oxide. The temperature in the single wafer reactor may be on the order of 550° C. to 700° C. As will be discussed in detail with regard to **FIG. 1**D, third sidewall-forming layer **44**, first sidewall-forming layer **40**, and second sidewall-forming layer **42** may be subsequently etched to form sidewall regions on opposing sides of gate stack **20**.

[**0036**] The formation of third sidewall-forming layer **44** has been described as being formed using techniques similar to those described with regard to the formation of first and second sidewall-forming layers **40** and **42**. Although these and other methods may be effective in reducing the thermal budget, it is generally recognized that the film properties associated with third sidewall-forming layer may be less critical to transistor performance than the film properties associated with first and second sidewall-forming layers **40** and **42**.

[**0037**] Forming first sidewall-forming layer **40**, second sidewall-forming layer **42**, and third sidewall-forming layer **44** in a relatively low temperature environment to achieve desired film properties alleviates the problems conventionally associated with doped drain and extension areas during formation of these layers. One aspect of the present disclosure recognizes that forming layers **40**, **42**, and **44** with a relatively low thermal budget may substantially improve the semiconductor device by substantially minimizing dopant loss and deactivation of the drain and extension areas of the semiconductor device and the gate regions. Additionally or alternatively, second sidewall-forming layer **42** formed with carbon impurities and the use of the BTBAS for nitride deposition may minimize dopant loss. In other embodiments of the present invention, deposition of the above-mentioned sidewall bodies may be by plasma-enhanced chemical deposition (PECVD) techniques using similar precursors at even lower temperature.

[**0038**] **FIG. 1D** is a cross-sectional view of semiconductor structure **10** after formation of source drain regions **52** in the surface of the semiconductor structure **10**. After the outward formation of first sidewall-forming layer **40**, second sidewall-forming layer **42**, third sidewall-forming layer **44**, and any other appropriate intermediate layers on gate stack **20** and sidewall spacers **22**, sidewall bodies **50** are formed proximate to sidewall spacers **22**. Sidewall spacers **22** may be formed by removing portions of layers **40**, **42**, and **44** by anisotropically etching layers **40**, **42**, and **44**. In particular embodiments, portions of layers **40**, **42**, and **44** may be removed by performing a plasma etch.

[**0039**] After sidewall bodies **50** are formed, source drain regions **52** may be formed in the surface of substrate **12**. In various embodiments, source drain regions **52** may comprise a relatively high doping concentration of boron, phosphorous, and/or arsenic dopants. Source drain regions **52** may be formed, for example, by deep ion implantation, deep diffusion, or by any other appropriate technique for doping substrate **12**. During ion implantation, sidewall bodies **50** operate to protect source drain extension regions **32** disposed inwardly from gate **16**. The implantation of the dopants is self-aligned with respect to the outer edges of sidewall bodies **50**. Thus, prior to high temperature processes, source drain regions **52** initiate from points within substrate **12** that align with and correspond to the outward edges of sidewall bodies **50**. The total thickness sidewall bodies **50** remaining after removal of a portion or portions of layers **40**, **42**, and **44** depends at least in part on a desired thickness necessary to protect substrate **12** and source drain extension regions **32** during formation of source drain regions **52**.

[**0040**] At some point, source drain regions **52** and source drain extension regions **32** are activated by a second anneal step performed on semiconductor structure **10**. The second anneal step is typically more aggressive than the anneal performed after the formation of extension regions **32**. The second anneal step may be achieved using various techniques, such as a rapid thermal anneal (RTA) at a temperature on the order of approximately 1000° C. to 1050° C. for approximately 1 to 5 seconds. Similar to the first annealing step discussed above, the second annealing step, as well as any other high temperature processes performed on semiconductor structure **10**, may result in the lateral migration of opposing source drain extension regions **32** and source drain regions **52** toward each other. As a result, the distance between source drain extension regions **32** and source drain regions **52** that comprises channel region **34** is further decreased.

[**0041**] Because the implantation of dopant to create the source drain regions **52** alters the dopant concentration profile of substrate **12** by gradually increasing the dopant concentration level of areas of the substrate **12** near the surface, the junction depth after the implantation of source drain region **52** is deeper within substrate **12** than the junction depth prior to the implantation of source drain region **52**. A deeper junction depth increases lateral migration of source drain regions **52** and extension regions **32**. The formation of first sidewall-forming layer **40**, second sidewall-forming layer **42**, and third sidewall-forming layer **44** prior to the etching of gate stack **20** to form sidewall bodies **50**, however, further increases the distance that source drains **52** may migrate laterally before effecting junction capacitance and transistor off-state leakage current.

[**0042**] **FIG. 1E** is a cross-sectional view of a transistor indicated generally at **60** formed in accordance with the teachings of the present invention. Transistor **60** includes gate conductor **24**, gate insulator **26**, extension regions **32**, source drain regions **52**, and a channel region **34** positioned as shown. Transistor **60** is shown after insulator or isolation insulator layer **62** is disposed on the outward surface of gate stack **20** and contacts **64***a, b*, and *c* are formed through at least a portion of substrate layer **62**. As shown, transistor **60** is a field effect transistor, but transistor **60** may comprise any of a variety of semiconductor structures including a bipolar junction transistor, a NMOS transistor, a PMOS transistor, a CMOS transistor, or other semiconductor based transistor.

[**0043**] Transistor **60** includes a gate stack **20** patterned from multiple layers formed on the surface of semiconductor structure **10**. Gate stack **20** and the layers disposed thereon

may be formed according to various teachings of the present invention. For example, the processes used to form sidewall-forming layers **40**, **42**, and **44** minimize parasitic resistance, reduce junction depth, and/or prevent diode leakage by reducing the thermal budget associated with semiconductor structure **10**. The thermal budget may be reduced by decreasing the duration and temperature of heating cycles performed on transistor **60**. For example, after the formation of first sidewall-forming layer **40**, transistor **60** may be heated in a single wafer reactor. The thermal budget for layer **42** may be reduced by forming one or more sidewall-forming layers in a BTBAS environment. Additionally or alternatively, the formation of second sidewall-forming layer **42** may also include the introduction of carbon impurities. Accordingly, dopant loss may be minimized and the deactivation of the drain extension areas may be reduced during the formation of sidewall-forming layers. From various layers, sidewall spacers **22** are formed on opposing sides of transistor **60**. Similarly, sidewall bodies **50** are formed outwardly from sidewall spacers **22** on opposing sides of transistor **60**.

[**0044**] In the illustrated embodiment, transistor **60** is shown as including isolation insulator layer **62** disposed on the outward surface of gate stack **20** and a contact **64** formed through at least a portion of isolation insulator layer **62**. Isolation insulator layer **62** may be formed using a physical vapor deposition technique or by any appropriate technique known or available. In particular embodiments, isolation insulator layer **62** may be formed using a plasma-enhanced chemical vapor deposition. Isolation insulator layer **62** typically includes a dielectric material. For example, isolation insulator layer **62** may comprise fluorinated silicate glass, organosilicate glass, or any other appropriate polymer. In particular embodiments, isolation insulator layer **62** may comprise fluorinated silicate glass, organosilicate glass, methyl silsequioxane (MSQ), hydrogen silsequioxane (HSQ), or other appropriate silicate polymer.

[**0045**] Transistor **60** includes a contact **64** formed in isolation insulator layer **62**. The contact **64** may be formed using a conventional etching process. For example, anisotropic etch processes using gases and plasma energy may be used. The contact **64** may then be filled with one or more layers of conductive material to allow interconnection between two semiconductor components. Conductive materials commonly used to fill contact **64** include copper. It is generally recognized, however, that copper is merely exemplary, and any conductive material may be used to form contact **64**.

[**0046**] **FIG. 2** is a schematic illustrating the effect of varying sidewall spacer films on dopant depth profiles. Specifically, line **2**A represents the dopant depth profile for conventional sidewall spacer films. Line **2**B represents the dopant depth profile for sidewall spacer films formed using the techniques of the present invention to improve dopant concentration and reduce dopant junction depth. For example, formation of second sidewall-forming layer **42** may occur in an environment that comprises a relatively low temperature, while maintaining a sufficient deposition rate of the dielectric material comprising second sidewall-forming layer **42**. Forming one or more spacer layers at a relatively low temperature may substantially minimize dopant loss and deactivation of the semiconductor gate stack **20**. The lower temperature decreases the thermal budget and minimizes dopant migration. In particular embodiments, second sidewall-forming layer **42** may include carbon to enhance the permeability of hydrogen in first sidewall-forming layer **40**. A lower hydrogen content in first sidewall-forming layer **40** may further decrease dopant loss while lowering parasitic sheet resistance. Improved dopant concentration in Line **2**B is depicted by a sharper or steeper decrease over an increase in depth.

[**0047**] Line **2**C represents the dopant depth profile for sidewall spacer films at least partially formed after an ammonia anneal step. In certain embodiments of the present invention, the ammonia anneal step is performed before the deposition of first sidewall-forming layer **40**. The ammonia anneal step results in the incorporation of nitrogen between source drain extension region **32** and first sidewall-forming layer **40**. The presence of interfacial nitrogen limits dopant migration, both vertically and laterally, and further reduces dopant junction depth. Improved dopant concentration is depicted in Line **2**C by a sharper or steeper decrease over an increase in depth.

[**0048**] Although the present invention has been described in detail, it should be understood that various changes, alterations, substitutions, and modifications can be made to the teachings disclosed herein without departing from the spirit and scope of the present invention which is solely defined by the appended claims.

What is claimed is:

1. A method of forming a semiconductor device, comprising:

forming one or more sidewall spacer layers on the outer surface of a gate stack;

doping at least one region of an at least partially formed semiconductor device;

forming first and second sidewall bodies on opposing sides of the gate stack, wherein the formation of the first and second sidewall bodies comprises:

forming a first sidewall-forming layer on the outward surface of the gate stack and the sidewall spacer layers;

exposing the semiconductor device to a heating cycle in a single wafer reactor; and

forming a second sidewall-forming layer on the outward surface of the first sidewall-forming layer, the formation of the second sidewall-forming layer occurring in an environment that substantially minimizes dopant loss and deactivation in the at least one region of the partially formed semiconductor device.

2. The method of claim 1, wherein the at least one of the one or more sidewall spacer layers comprises a dielectric material selected from a group consisting of nitride, oxide, oxi-nitride, and silicon dioxide.

3. The method of claim 1, wherein the at least one region of the partially formed semiconductor device comprises an extension region.

4. The method of claim 1, wherein the at least one region of the partially formed semiconductor device comprises a portion of the gate stack.

5. The method of claim 1, wherein the first sidewall-forming layer comprises dielectric material selected from a group consisting of oxide, oxi-nitride, or silicon dioxide.

6. The method of claim 5, wherein the semiconductor device is placed in the single wafer reactor for approximately one to two minutes.

7. The method of claim 1, wherein the temperature in the single wafer reactor is approximately 600 to 700° C.

8. The method of claim 5, wherein the semiconductor device is placed in a batch furnace at a reduced deposition temperature on the order of 500 to 600° C.

9. The method of claim 1, wherein the second sidewall-forming layer comprises a dielectric material selected from a group consisting of oxi-nitride or nitride.

10. The method of claim 1, wherein the environment comprises bistertiarybutylamino-silane (BTBAS).

11. The method of claim 1, wherein forming the second sidewall spacer layer comprises introducing carbon impurities of a concentration on the order of 3 to 15 percent.

12. The method of claim 1, wherein the semiconductor device comprises a transistor.

13. The method of claim 1, further comprising implanting first and second source drain regions into the substrate, the first and second source drain regions self-aligned relative to an outward surface of the first and second sidewall bodies.

14. The method of claim 1, further comprising forming first and second sidewall spacers on opposing sides of the gate stack, the first and second sidewall spacers formed before forming first and second source drain extension regions, the first and second source drain extension regions self-aligned relative to an outward surface of the first and second sidewall spacers, respectively.

15. A semiconductor device comprising:

a gate stack formed on the outer surface of a substrate;

first and second sidewall spacers formed on opposing sides of the gate stack;

first and second source drain extension regions formed in the surface of the substrate on opposing sides of the gate stack, the first and second source drain extension regions self-aligned relative to an outward surface of the sidewall spacers; and

first and second sidewall bodies formed on the outward surface of the gate stack, each of the first and second sidewall bodies comprising:

a first sidewall-forming layer formed on the outward surface of the first and second sidewall spacers, the first sidewall-forming layer formed by exposing the semiconductor device to a heating cycle in a single wafer reactor; and

a second sidewall-forming layer formed on the outward surface of the first sidewall-forming layer in an environment that substantially minimizes dopant loss and deactivation in the first and second source drain extension regions.

16. The semiconductor device of claim 15, wherein the first and second sidewall spacers comprise one or more layers of a dielectric material selected from a group consisting of nitride, oxide, oxi-nitride, and silicon dioxide.

17. The semiconductor device of claim 15, wherein the first sidewall-forming layer comprises dielectric material selected from a group consisting of oxide, oxi-nitride, or silicon dioxide.

18. The semiconductor device of claim 17, wherein the semiconductor device is placed in the single wafer reactor for approximately one to two minutes.

19. The semiconductor device of claim 15, wherein the temperature in the single wafer reactor is approximately 600 to 700° C.

20. The semiconductor device of claim 5, wherein the semiconductor device is placed in a batch furnace at a reduced deposition temperature on the order of 500 to 600° C.

21. The semiconductor device of claim 15, wherein the second sidewall-forming layer comprises a dielectric material selected from a group consisting of oxi-nitride or nitride.

22. The semiconductor device of claim 15, wherein the environment comprises bistertiarybutylamino-silane (BTBAS).

23. The semiconductor device of claim 15, wherein the second sidewall spacer layer comprises carbon impurities of a concentration on the order of 3 to 15 percent.

24. The semiconductor device of claim 15, wherein the semiconductor device comprises a transistor.

25. The semiconductor device of claim 15, further comprising first and second source drain regions formed in the surface of the substrate, the first and second source drain regions self-aligned relative to an outward surface of the first and second sidewall bodies.

* * * * *