US008630699B2

(12) **United States Patent**
Baker et al.

(10) **Patent No.: US 8,630,699 B2**
(45) **Date of Patent: Jan. 14, 2014**

(54) **BODY WORN PHYSIOLOGICAL SENSOR DEVICE HAVING A DISPOSABLE ELECTRODE MODULE**

(75) Inventors: **Steven D. Baker**, Beaverton, OR (US); **Eric T. McAdams**, Whitehead (GB); **James P. Welch**, Mission Viejo, CA (US); **Norbert Ohlenbusch**, Andover, MA (US); **Thomas P. Blackadar**, Natick, MA (US)

(73) Assignee: **Welch Allyn, Inc.**, Skaneateles Falls, NY (US)

(*) Notice: Subject to any disclaimer, the term of this patent is extended or adjusted under 35 U.S.C. 154(b) by 0 days.

(21) Appl. No.: **13/488,520**

(22) Filed: **Jun. 5, 2012**

(65) **Prior Publication Data**

US 2012/0238890 A1 Sep. 20, 2012

Related U.S. Application Data

(63) Continuation of application No. 11/591,619, filed on Nov. 1, 2006, now Pat. No. 8,214,007.

(51) **Int. Cl.**
A61B 5/04 (2006.01)
A61B 5/02 (2006.01)

(52) **U.S. Cl.**
USPC **600/509**; 600/372; 600/508

(58) **Field of Classification Search**
USPC 600/508–509, 372
See application file for complete search history.

(56) **References Cited**

U.S. PATENT DOCUMENTS

4,141,367 A 2/1979 Ferreira
4,791,933 A 12/1988 Asai et al.
4,800,894 A 1/1989 Milani
4,957,109 A 9/1990 Groeger et al.
4,958,645 A 9/1990 Cadell et al.
4,974,607 A 12/1990 Miwa
5,257,631 A 11/1993 Wik
5,294,928 A 3/1994 Cooper et al.
5,309,918 A 5/1994 Schraag
5,319,363 A 6/1994 Welch et al.
5,458,122 A 10/1995 Hethuin

(Continued)

FOREIGN PATENT DOCUMENTS

EP 0209804 A2 1/1987
EP 0770349 A1 5/1997

(Continued)

OTHER PUBLICATIONS

Japanese Office Action dated Jan. 12, 2010 for Japanese Patent Application No. 2006-507455 (5 pages).

(Continued)

Primary Examiner — Nicole F Lavert

(74) *Attorney, Agent, or Firm* — Hiscock & Barclay, LLP

(57) **ABSTRACT**

A method for providing high voltage circuit protection for a patient monitor. The method includes providing a substrate that supports one or more electrical connections to a patient's body. The method further includes determining a print pattern and thickness of a first material having a first resistivity to be printed on the substrate, determining a print pattern and thickness of a second material having a second resistivity to be printed on the substrate, printing the first material onto the substrate, and printing the second material onto the substrate wherein at least part of the second the material overlays the first material.

8 Claims, 14 Drawing Sheets

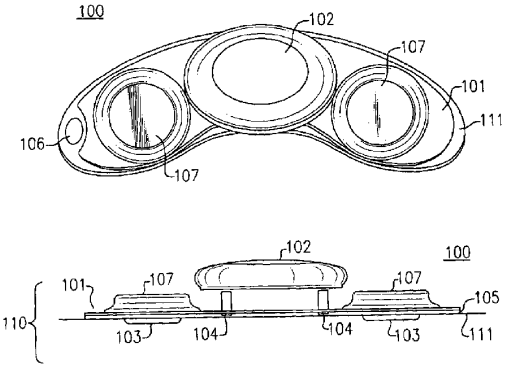

(56) **References Cited**

U.S. PATENT DOCUMENTS

5,515,735	A	5/1996	Sarihan
5,538,007	A	7/1996	Gorman
5,544,661	A	8/1996	Davis et al.
5,579,001	A	11/1996	Dempsey et al.
5,579,775	A	12/1996	Dempsey et al.
5,600,071	A	2/1997	Sooriakumar et al.
5,682,803	A	11/1997	Gideon et al.
5,687,734	A	11/1997	Dempsey et al.
5,694,940	A	12/1997	Unger et al.
5,743,269	A	4/1998	Okigami et al.
5,748,103	A	5/1998	Flach et al.
5,767,791	A	6/1998	Stoop et al.
5,808,331	A	9/1998	Zhang et al.
5,832,490	A	11/1998	Riley
5,871,451	A	2/1999	Unger et al.
5,882,300	A	3/1999	Malinouskas et al.
5,889,211	A	3/1999	Maudie et al.
5,899,866	A	5/1999	Cyrus et al.
5,916,159	A	6/1999	Kelly et al.
5,917,414	A	6/1999	Oppelt et al.
5,919,141	A	7/1999	Money et al.
5,938,597	A	8/1999	Stratbucker
5,966,692	A	10/1999	Langer et al.
5,987,519	A	11/1999	Peifer et al.
5,995,861	A	11/1999	Price
6,006,125	A	12/1999	Kelly et al.
6,013,933	A	1/2000	Foerstner et al.
6,018,705	A	1/2000	Gaudet et al.
6,026,321	A	2/2000	Miyata et al.
6,052,654	A	4/2000	Gaudet et al.
6,057,758	A	5/2000	Dempsey et al.
6,066,093	A	5/2000	Kelly et al.
6,073,046	A	6/2000	Patel et al.
6,076,003	A	6/2000	Rogel
6,089,692	A	7/2000	Anagnostopoulos
6,122,340	A	9/2000	Darley et al.
6,150,951	A	11/2000	Olejniczak
6,161,036	A	12/2000	Matsumura et al.
6,171,236	B1	1/2001	Bonutti
6,198,394	B1	3/2001	Jacobsen et al.
6,212,944	B1	4/2001	Kwun et al.
6,298,314	B1	10/2001	Blackadar et al.
6,331,444	B1	12/2001	Ferrari et al.
6,336,365	B1	1/2002	Blackadar et al.
6,357,147	B1	3/2002	Darley et al.
6,440,067	B1	8/2002	DeLuca et al.
6,448,621	B1	9/2002	Thakur
6,493,652	B1	12/2002	Ohlenbusch et al.
6,539,613	B1	4/2003	Ulmer
6,544,171	B2	4/2003	Beetz et al.
6,544,173	B2	4/2003	West et al.
6,544,174	B2	4/2003	West et al.
6,579,231	B1	6/2003	Phipps
6,586,810	B2	7/2003	Thakur
6,623,312	B2	9/2003	Merry et al.
6,794,900	B2	9/2004	Tang et al.
6,847,892	B2	1/2005	Zhou et al.
6,870,484	B1	3/2005	Brinsfield et al.
6,911,727	B1	6/2005	Martin et al.
7,318,417	B2	1/2008	Lang et al.
7,382,247	B2	6/2008	Welch et al.
7,439,856	B2	10/2008	Weiner et al.
7,508,064	B2	3/2009	Martin et al.
7,515,043	B2	4/2009	Welch et al.
7,515,044	B2	4/2009	Welch et al.
7,563,632	B2	7/2009	Martin et al.
2001/0023315	A1	9/2001	Flach et al.
2002/0106709	A1	8/2002	Potts et al.
2002/0122519	A1	9/2002	Douglas et al.
2003/0001742	A1	1/2003	Eshelman et al.
2003/0055460	A1	3/2003	Owen et al.
2003/0149349	A1	8/2003	Jensen
2004/0113806	A1	6/2004	Neykov
2004/0242976	A1	12/2004	Abreu
2004/0252031	A1	12/2004	Taylor
2005/0116820	A1	6/2005	Goldreich
2005/0137489	A1	6/2005	Jackson et al.
2005/0206518	A1	9/2005	Welch et al.
2005/0216334	A1	9/2005	Mehrabani-Farsi
2005/0245839	A1	11/2005	Stivoric et al.
2006/0044856	A1	3/2006	Bird et al.
2006/0074284	A1	4/2006	Juola et al.
2006/0136001	A1	6/2006	Ortega et al.
2006/0183434	A1	8/2006	Westra et al.
2006/0189976	A1	8/2006	Karni et al.
2006/0205171	A1	9/2006	Tsukada
2006/0238333	A1	10/2006	Welch et al.
2007/0013511	A1	1/2007	Weiner et al.
2007/0069887	A1	3/2007	Welch et al.
2007/0270678	A1	11/2007	Fadem et al.
2007/0293781	A1	12/2007	Sims et al.
2008/0139953	A1*	6/2008	Baker et al. 600/509
2009/0043185	A1	2/2009	McAdams et al.
2009/0131759	A1	5/2009	Sims et al.
2010/0145202	A1	6/2010	McLaughlin et al.
2010/0160762	A1	6/2010	McLaughlin et al.
2010/0324390	A1	12/2010	McLaughlin et al.

FOREIGN PATENT DOCUMENTS

EP	0910985	A1	4/1999
JP	11042214		2/1999
JP	11088546		3/1999
WO	9620641	A1	7/1996
WO	9629005	A1	9/1996
WO	9746156	A1	12/1997
WO	9959460	A2	11/1999
WO	0189362	A2	11/2001
WO	0189362	A3	11/2001
WO	0197686	A1	12/2001
WO	2008142365		11/2008
WO	2009056859		5/2009

OTHER PUBLICATIONS

International Search Report/Written Opinion for PCT/US07/83156 dated May 15, 2008 (16 pages).

* cited by examiner

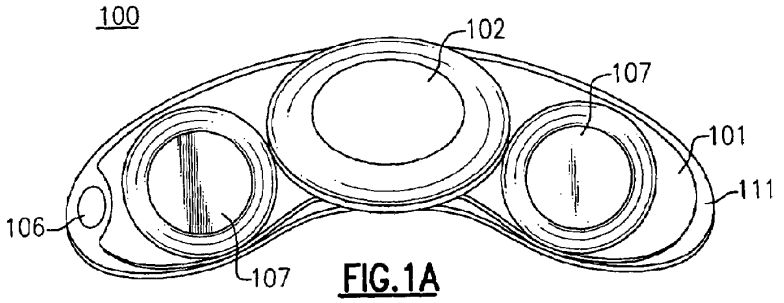

FIG.1A

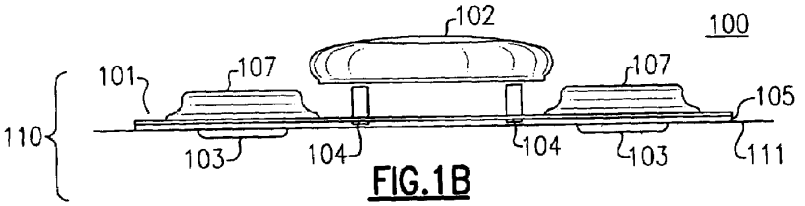

FIG.1B

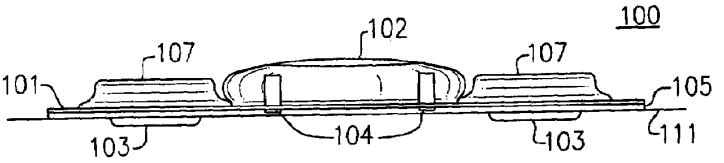

FIG.1C

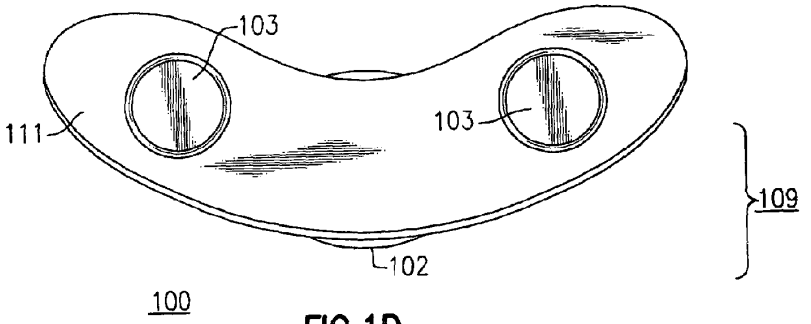

FIG.1D

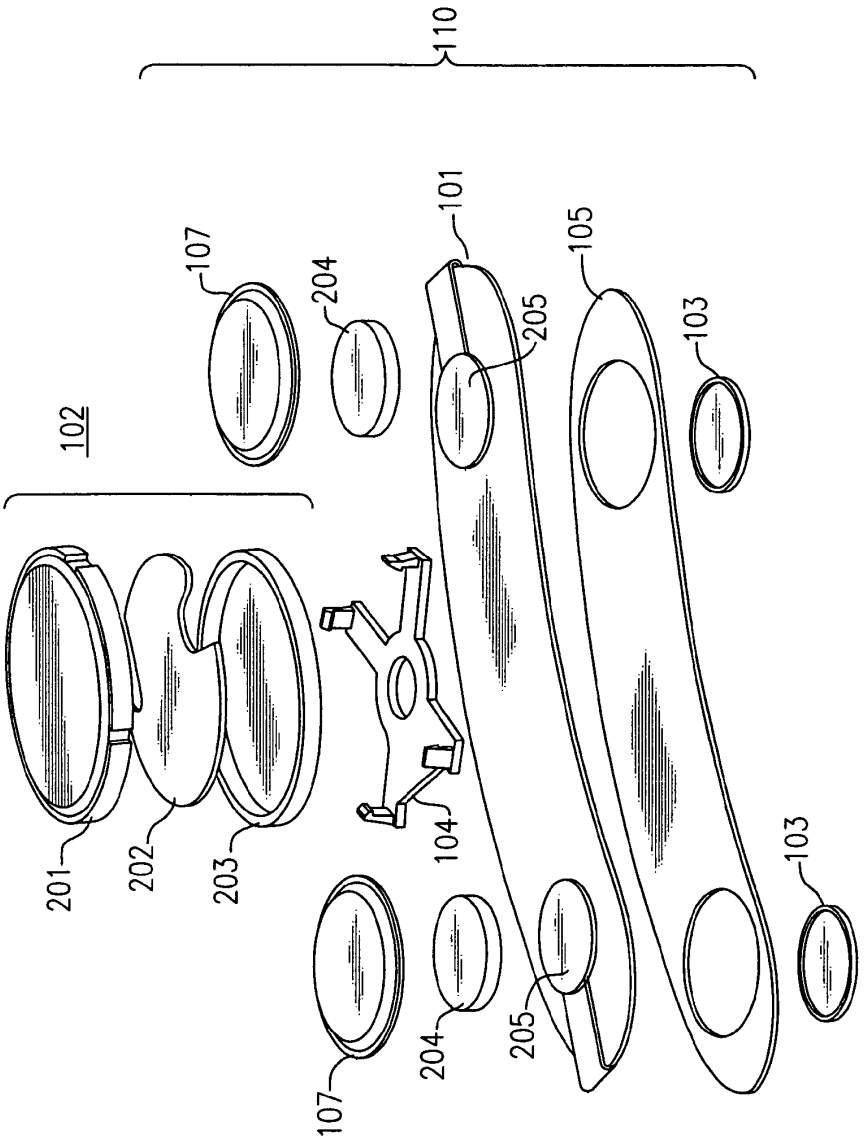

FIG.2

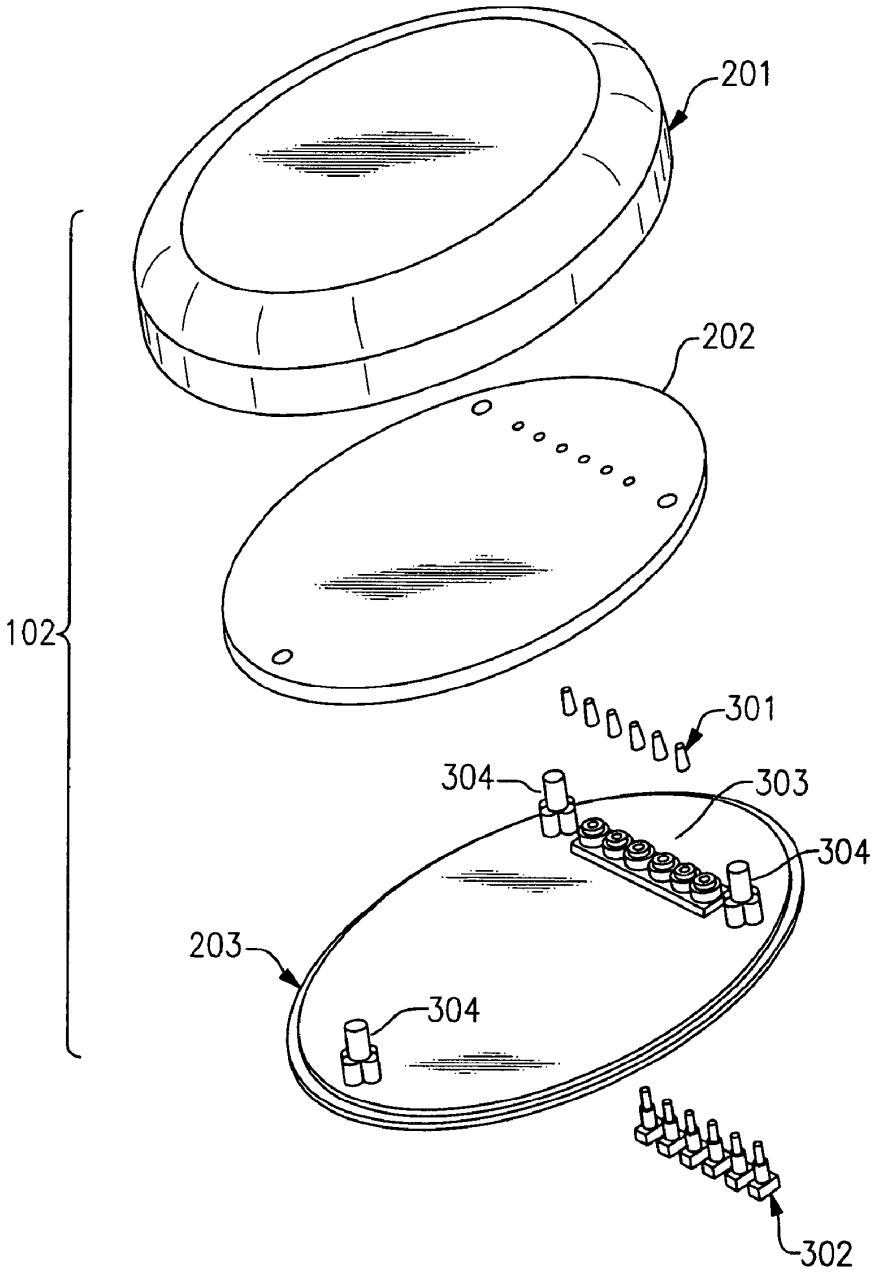

FIG.3

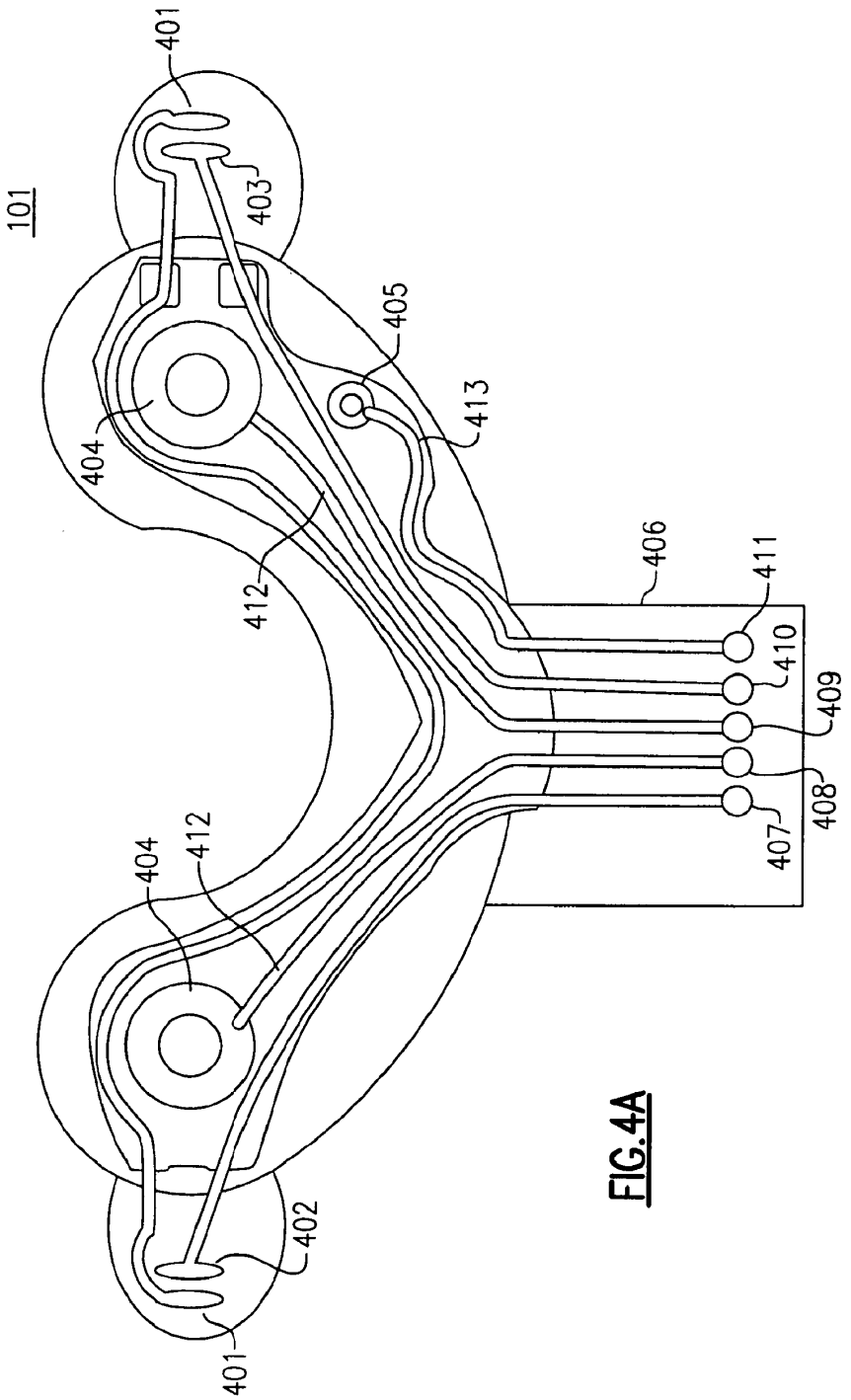
101
401
403
405
413
404
412
406
411
410
409
408
407
404
412
402
401

FIG.4A

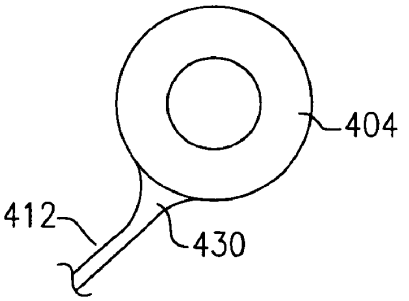

FIG.4B

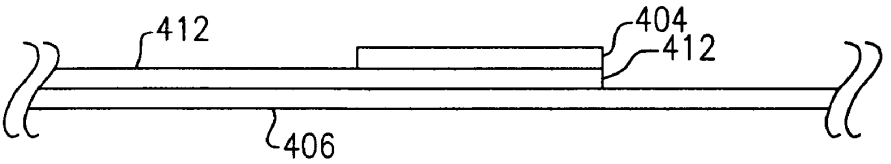

FIG.4C

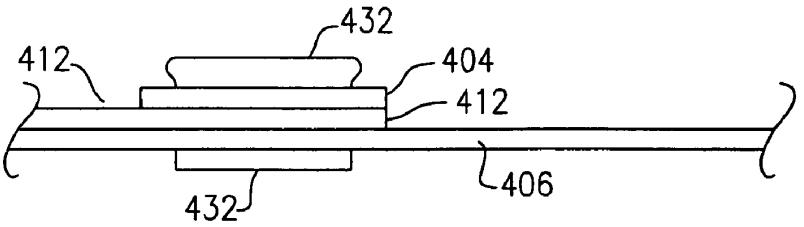

FIG.4D

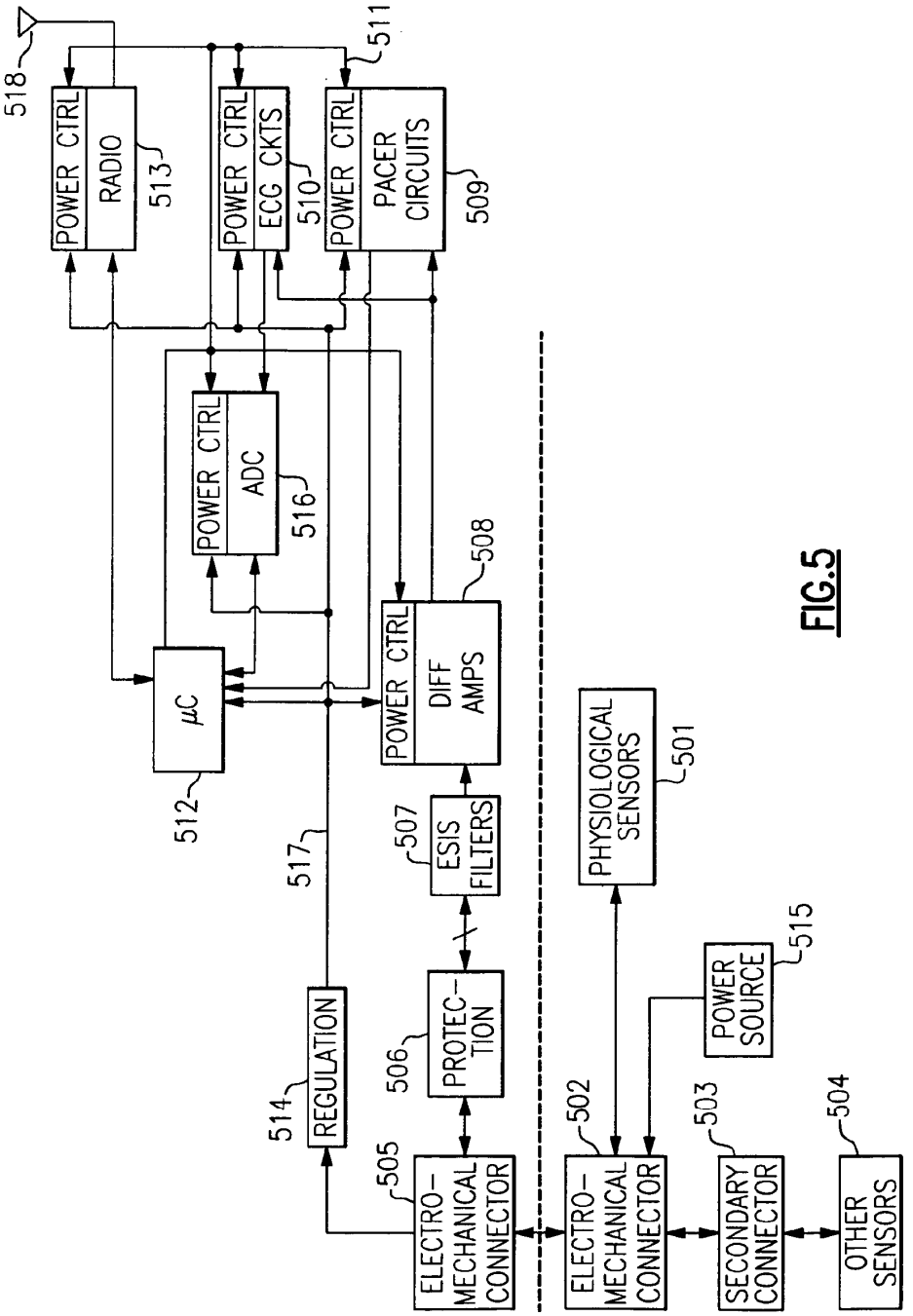
518
POWER CTRL
RADIO
513
POWER CTRL
ECG CKTS
510
511
POWER CTRL
PACER CIRCUITS
509
POWER CTRL
ADC
516
508
POWER CTRL
DIFF AMPS
μC
512
517
507
ESIS FILTERS
PHYSIOLOGICAL SENSORS
501
515
POWER SOURCE
506
PROTEC-TION
514
REGULATION
502
503
504
505
ELECTRO-MECHANICAL CONNECTOR
ELECTRO-MECHANICAL CONNECTOR
SECONDARY CONNECTOR
OTHER SENSORS

FIG.5

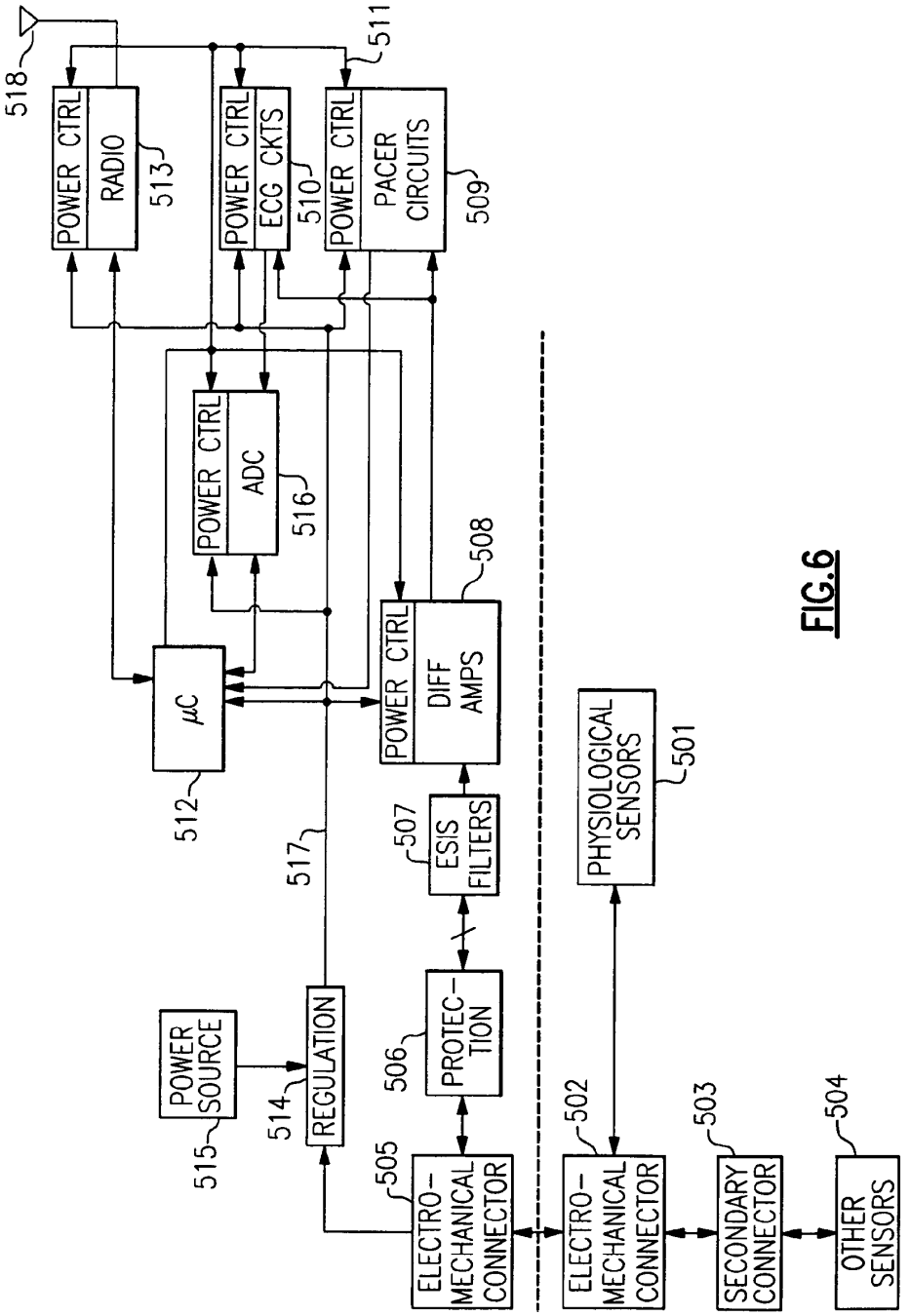
518
POWER CTRL
RADIO
513
POWER CTRL
ECG CKTS
510
POWER CTRL
PACER CIRCUITS
509
511
POWER CTRL
ADC
516
μC
512
POWER CTRL
DIFF AMPS
508
517
ESIS FILTERS
507
PROTEC-TION
506
POWER SOURCE
515
REGULATION
514
ELECTRO-MECHANICAL CONNECTOR
505
PHYSIOLOGICAL SENSORS
501
ELECTRO-MECHANICAL CONNECTOR
502
SECONDARY CONNECTOR
503
OTHER SENSORS
504

FIG.6

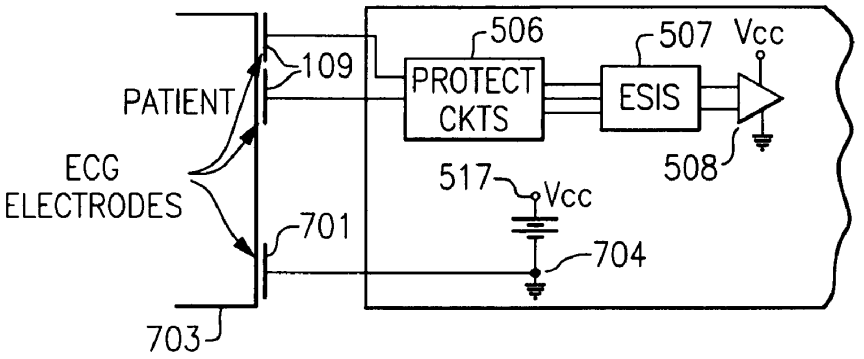
506
507
Vcc
109
PROTECT CKTS
ESIS
PATIENT
ECG ELECTRODES
508
517
Vcc
701
704
703

FIG.7A

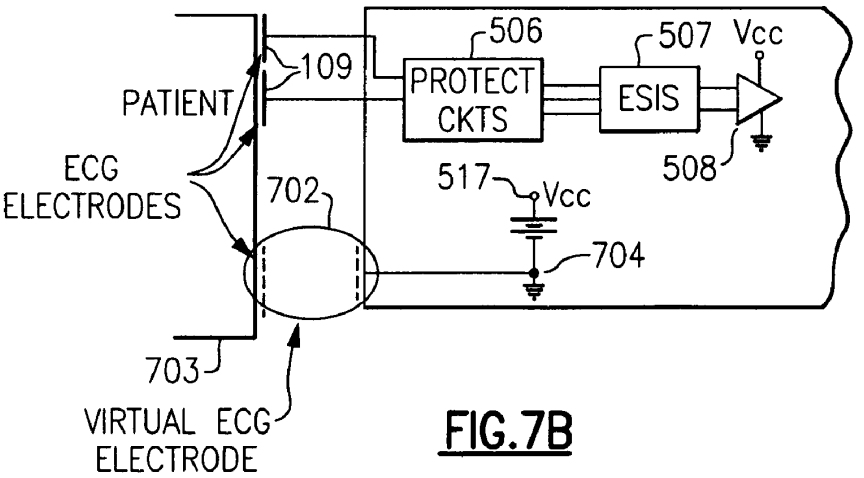
506
507
Vcc
109
PROTECT CKTS
ESIS
PATIENT
ECG ELECTRODES
508
517
Vcc
702
704
703
VIRTUAL ECG ELECTRODE

FIG.7B

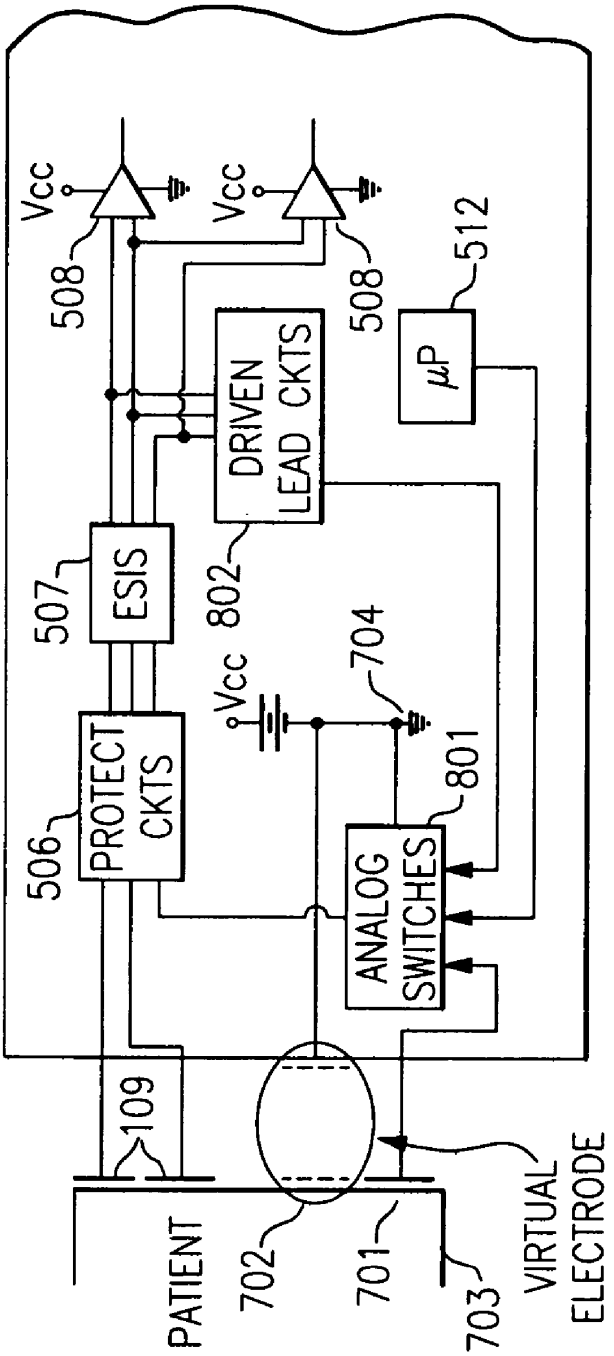
Vcc
Vcc
508
508
512
μP
DRIVEN LEAD CKTS
802
507
ESIS
704
Vcc
801
506
PROTECT CKTS
ANALOG SWITCHES
109
PATIENT
702
701
703
VIRTUAL ELECTRODE

FIG.8

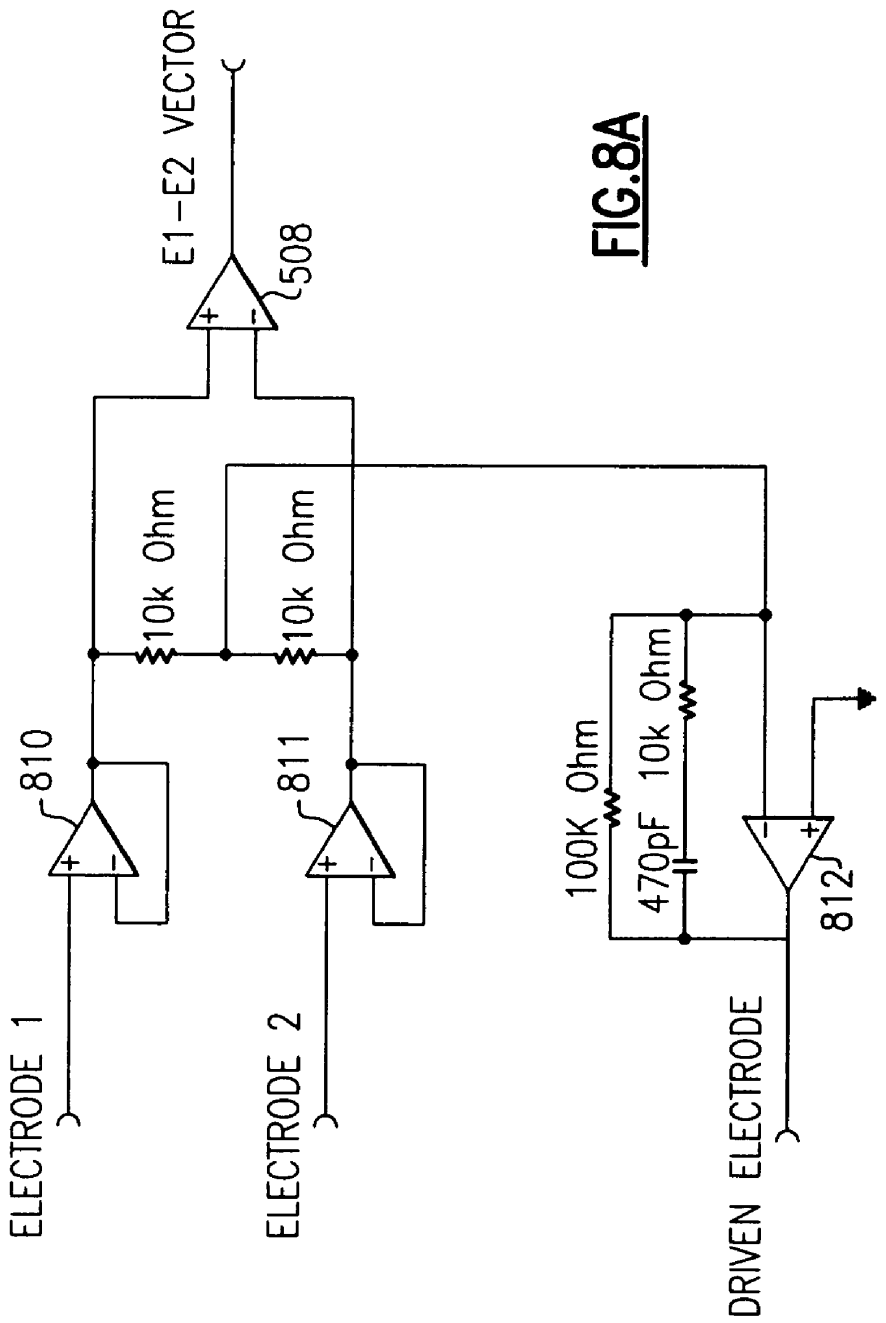
E1-E2 VECTOR
508
10k Ohm
10k Ohm
810
811
100K Ohm
470pF
10k Ohm
812
ELECTRODE 1
ELECTRODE 2
DRIVEN ELECTRODE

FIG.8A

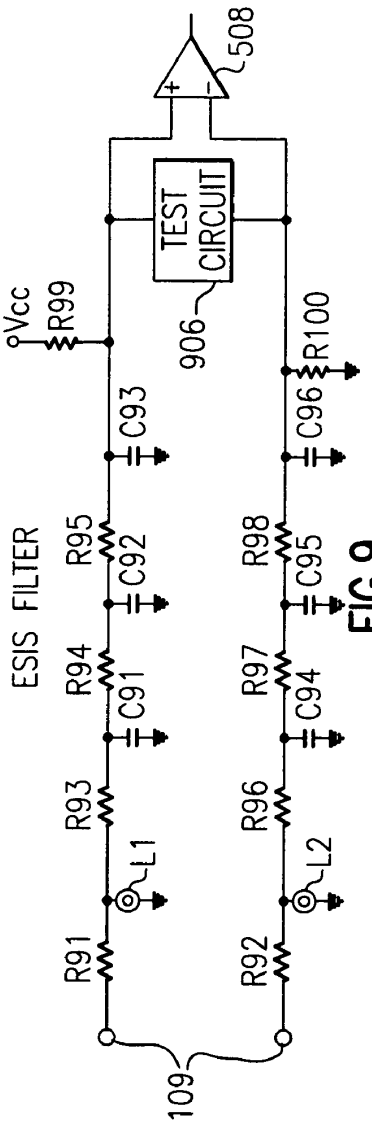
508
TEST CIRCUIT
906
Vcc
R99
R100
C93
C96
ESIS FILTER
R95
C92
R98
C95
R94
C91
R97
C94
R93
R96
L1
L2
R91
R92
109

FIG.9

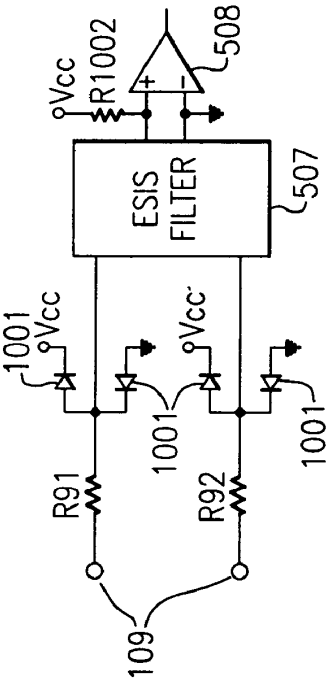
Vcc
R1002
508
ESIS FILTER
507
1001
Vcc
Vcc
1001
1001
R91
R92
109

FIG.10

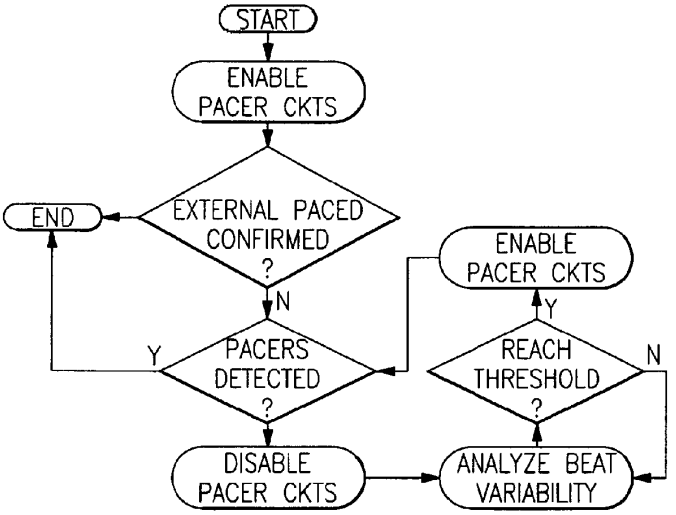

FIG.11

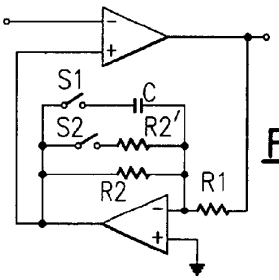

FIG.12

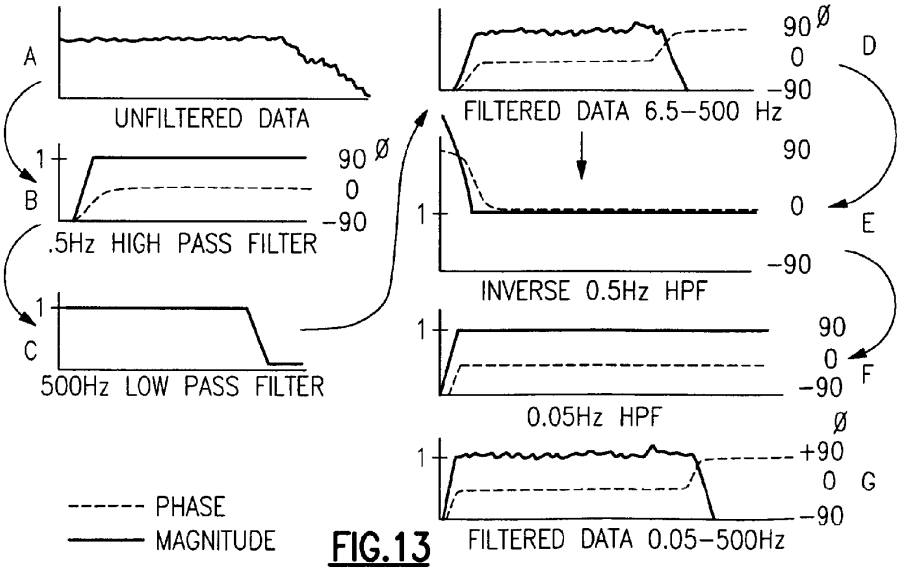

FIG.13

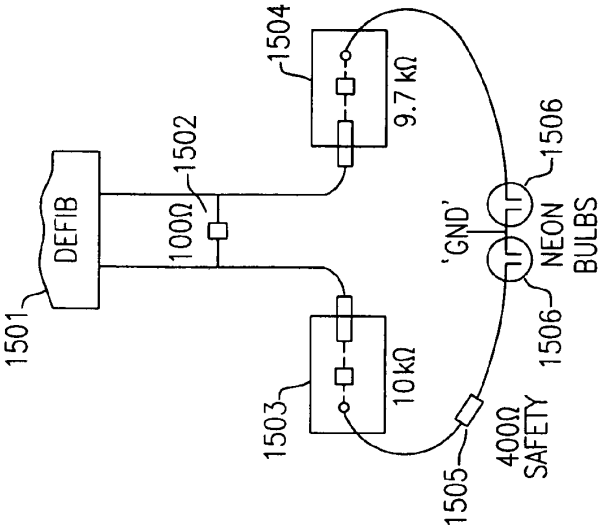
1501
DEFIB
1502
100Ω
1503
10kΩ
1504
9.7kΩ
1505
400Ω
SAFETY
'GND'
1506
NEON
BULBS
1506

FIG.15

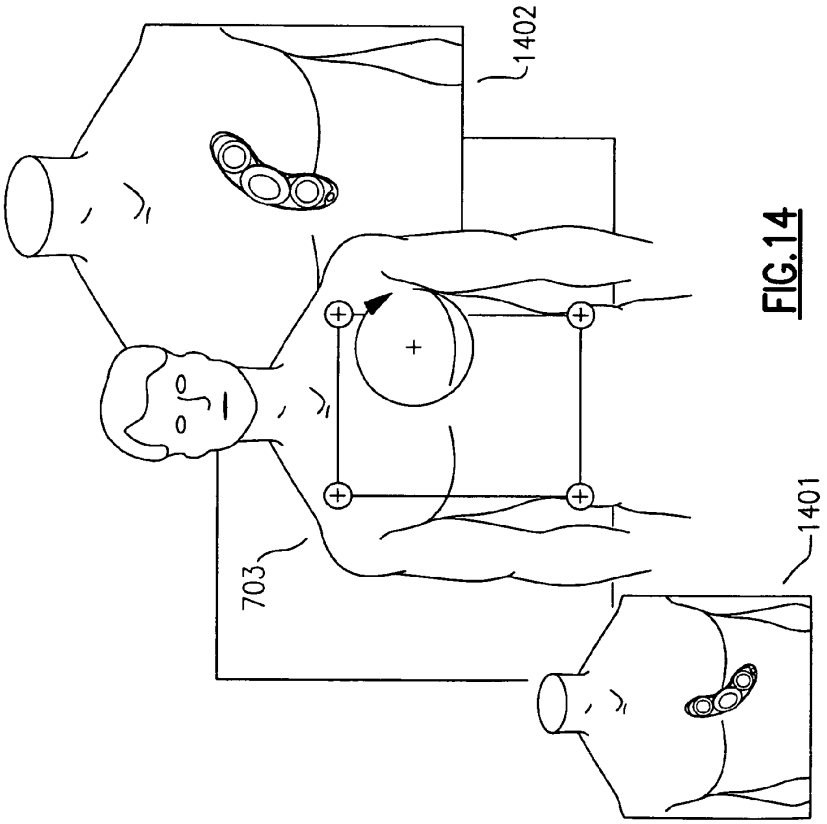
1402
703
1401

FIG.14

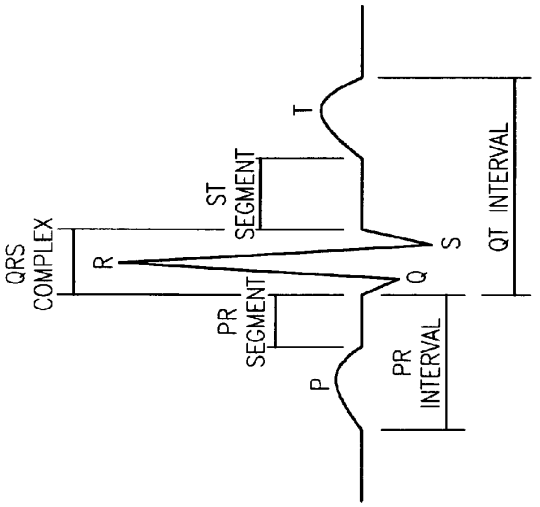

FIG.17

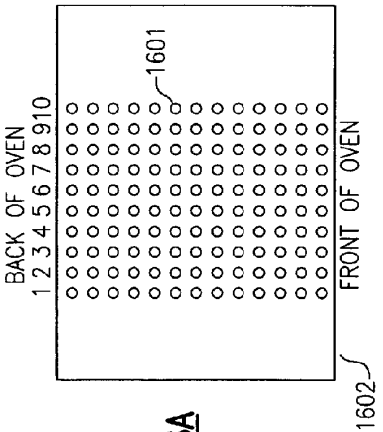

FIG.16A

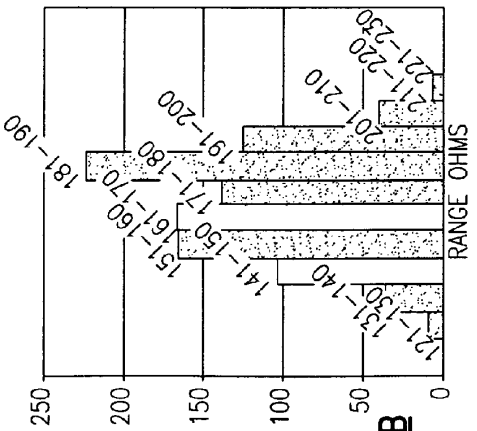

FIG.16B

BODY WORN PHYSIOLOGICAL SENSOR DEVICE HAVING A DISPOSABLE ELECTRODE MODULE

CROSS REFERENCE TO RELATED APPLICATIONS

This application is a continuation application of, and claims priority and benefit to, U.S. Pat. No. 8,214,007 B2, entitled "Body Worn Device Having a Disposable Electrode Module", filed Nov. 1, 2006, the entirety of which is hereby incorporated by reference.

FIELD OF THE INVENTION

This invention relates generally to a physiological monitor and more particularly to a body worn physiological monitor.

BACKGROUND OF THE INVENTION

Measurements of various physiological parameters are important to the study of the human condition. Physiological measurements can be particularly important in a health care setting, such as in a hospital. One of the more important physiological measurements performed on a patient is the electrocardiogram (ECG), showing the condition of the human heart.

Portable patient monitors have evolved that allow patients to enjoy at least some mobility. Typically a battery operated monitor can be hung on a belt, shoulder strap, or carried by a patient using some other similar hanging arrangement. Sensors, such as ECG electrodes, are affixed to the patient's body, such as with tape, and connected to the battery operated monitor by wires. After a fixed interval of time, or at a low battery indication, the batteries can be replaced or recharged. One example of a portable patient monitor is the Micropaq wireless patient monitor, manufactured by Welch Allyn, Inc., that permits multi-parameter monitoring and patient alarm capabilities built in a small, rugged, lightweight, patient-wearable device.

Another version of a portable physiological monitor is the heart rate monitor typically used by individuals engaged in an athletic activity. The monitor includes a sensor, which generally makes direct or indirect contact with an individual's chest to monitor heart beats and then by wires, or by wireless techniques, the sensor transmits the sensed heart beat to a nearby microcomputer based monitor and display. Such units generally measure only heart beat and are not capable of doing any of the traditional ECG analysis functions.

A recurrent problem with the portable monitors typically used in healthcare applications is the need for wires from sensors situated on the patient's body to the portable unit. These wires can become tangled and cause discomfort or become unplugged when inadvertently pulled or tugged on. In addition, wire motion can increase ECG noise due to the triboelectric effect. Muscle movement can also increase ECG noise, due to the typical placement of ECG electrodes over major muscles. Moreover, portable monitor battery maintenance (e.g. battery recharging or replacement) can be time consuming and costly.

Another problem is related to the requirement that a medical grade monitor survive multiple defibrillation cycles of at least 360 joules. Conventionally, this requirement has been met by one or more power resistors situated in series with the wire leads of a fixed or portable physiological monitor. The problem is that the physical volume of conventional power resistors is too large for use in a compact monitor application.

Another shortcoming of small sensor devices is that these devices lack the intelligence to vary the amount and type of data transmitted, depending on patient condition. Exercise heart monitors do not transmit a full patient waveform for clinical analysis while medical monitors measure and transmit the full patient waveform, even when the patient is healthy. While transmitting the full patient waveform is the preferred solution from a purely clinical standpoint, such transmission requires significant power to transmit large amounts of data and restricts the design from being small and inexpensive.

Yet another problem is that arrhythmia analysis is a computationally intensive operation not well-suited to existing small portable monitors that presently have no ability to perform arrhythmia analysis.

Therefore, there is a need for a body worn combined physiological sensor and monitor having a disposable sensor, but used and worn by a patient as a single unit directly and non-permanently affixed to a patient's body. Also, what is needed is a physically compact resistive element for protecting a body worn device from damage caused by multiple defibrillation cycles. Also, what is needed is a medical-grade monitor that can intelligently measure and transmit data only as required to alert clinicians that the patient needs additional attention. What is also needed is a body-worn device capable of running arrhythmia analysis through computationally efficient algorithms.

SUMMARY OF THE INVENTION

According to one aspect, a body worn patient monitoring device comprises at least one disposable module including a plurality of electrical connections to the body. The electrical connections are coupled to a skin surface of the patient to measure physiological signals of the patient. The at least one disposable module includes a disposable module connector. The body worn patient monitoring device includes at least one internal or external power source to power the body worn patient monitoring device. The body worn patient monitoring device also includes at least one communication-computation module, having a communication-computation module connector to receive physiological signals from the at least one disposable module via said disposable module connector. The communication-computation module also includes at least one microprocessor to actively monitor the patient and to perform a real-time physiological analysis of the physiological signals and a radio circuit to communicate a raw physiological signal or a result of the physiological analysis at a predetermined time or on the occurrence of a predetermined event, via a radio transmission to a remote radio receiver, wherein the at least one disposable module is mechanically and electrically coupled directly to the at least one communication-computation module. The body worn patient monitoring device, including the at least one disposable module and the at least one communication-computation module, is directly non-permanently affixed to the skin surface of the patient.

According to another aspect, a method of providing high voltage circuit protection for a body worn monitor comprises the steps of: providing a substrate that supports one or more electrical connections to a patient's body; determining a print pattern and thickness of a first material having a first resistivity to be printed on the substrate; determining a print pattern and thickness of a second material having a second resistivity to be printed on the substrate; printing the first material onto

the substrate; and printing the second material onto the substrate wherein at least part of the second material overlays the first material.

BRIEF DESCRIPTION OF THE DRAWINGS

For a further understanding of these and objects of the invention, reference will be made to the following Detailed Description which is to be read in connection with the accompanying drawings, in which:

FIG. **1**A shows an exemplary body worn physiological monitor having a disposable electrode module;

FIG. **1**B shows a partially unassembled side view of the body worn physiological monitor of FIG. **1**A;

FIG. **1**C shows an assembled side view of the body worn physiological monitor of FIG. **1**A;

FIG. **1**D shows a bottom view of the body worn physiological monitor of FIG. **1**A;

FIG. **2** shows an exploded perspective view of an exemplary body worn physiological monitor;

FIG. **3** shows an exploded perspective view of an exemplary computation and communication module;

FIG. **4**A shows an exemplary disposable unit flexible circuit board;

FIG. **4**B shows a partial enlarged view of a portion of the flexible circuit board of FIG. **4**A, further showing an exemplary resistive trace having a fillet;

FIG. **4**C shows a partial side elevated view of a portion of the flexible circuit board of FIG. **4**A, further showing an exemplary conductive surface overlaying a resistive material;

FIG. **4**D shows a partial side elevational view of the circuit board of FIG. **4**A, further showing an exemplary conductive surface having a snap receptacle;

FIG. **5** shows a block diagram of one embodiment of a body worn physiological monitor having a power source in a disposable unit;

FIG. **6** shows a block diagram of one embodiment of a body worn physiological monitor having a power source in or connected to the computation and communication module;

FIG. **7**A shows a schematic diagram of a direct connected reference electrode used in conjunction with a body worn physiological monitor;

FIG. **7**B shows a schematic diagram of a virtual reference electrode as used in conjunction with a body worn physiological monitor;

FIG. **8** shows a schematic diagram depicting one embodiment of an analog switching arrangement provided on a body worn physiological monitor to select a reference electrode configuration;

FIG. **8**A shows an exemplary driven lead circuit topology for use with electrodes of a body worn physiological monitor;

FIG. **9** shows an exemplary ESIS filter circuit topology with circuit protection;

FIG. **10** shows an alternative circuit protection to that depicted in FIG. **9**;

FIG. **11** shows a flow chart for an algorithm utilized by a body worn physiological monitor to detect whether a patient has a pace maker;

FIG. **12** shows a circuit topology of a high pass filter useful for baseline restoration;

FIG. **13** shows seven graphs of amplitudes plotted versus frequency to illustrate exemplary operation of the circuit of FIG. **12**;

FIG. **14** shows two exemplary positions for a body worn ECG monitor to be non-permanently affixed directly to a patient's body;

FIG. **15** shows a block diagram of a setup for simulating the effect of patient defibrillation on resistive traces;

FIG. **16**A symbolically shows resistive dots silk screened on a tray;

FIG. **16**B shows a histogram of an exemplary resistive distribution of baked resistive dots; and

FIG. **17** shows an exemplary ECG waveform.

Package styling varies slightly between the drawings. Such minor differences, e.g. the case styling of computation and communication module **102**, illustrate minor variations in mechanical packaging suitable for use as body worn monitors. Drawings are not necessarily shown to scale.

DETAILED DESCRIPTION

A "body worn" device is described herein with regard to certain exemplary embodiments. A "body worn" device is defined herein as a device that is directly, but non-permanently, affixed to a patient's body. A "body worn monitor" is a device that can be directly "worn" on the patient's body as a single unit, including one or more physiological sensors and a communications and computation module to perform at least initial processing of one or more physiological measurements made using one or more physiological sensors. Unlike prior art patient-wearable devices, at least one sensor can be incorporated into the device that makes a direct or indirect (such as by capacitive coupling) electrical connection with the patient's body without the use of external wires from sensors to the device. In addition and unlike athletic heart monitors, a "body worn" monitor can be a full functioning medical grade monitor, e.g. meeting the requirements of European Unions' Medical Device Directive and other applicable industry standards, such as EC-13 for an electrocardiograph. The body worn medical-grade monitor can include a device, for example, such as a pulse oximeter, CO_2 monitor, respiration monitor, or can function as an ECG monitor, incorporating physiological sensors, front end analog electronic signal conditioning circuits, and a microcomputer based computation unit with wireless reporting of measured physiological data, all contained within in a "body worn" package that can be non-permanently affixed directly to a patient's body. A body-worn medical-grade monitor can also include additional measurement capabilities beyond those mentioned here.

FIGS. **1**A-**1**D depict various views of an exemplary body worn physiological monitor **100** having a communication and computation module **102** and a disposable electrode module **110**. In this exemplary embodiment, physiological monitor **100** is designed for use as an electrocardiogram (ECG) monitor for obtaining and recording and/or transmitting ECG information, including ECG waveforms and alarms for a person, such as a patient, wearing body worn physiological monitor **100**.

FIG. **1**A shows an exemplary top view of body worn physiological monitor **100**. A crescent shape allows the body worn physiological monitor **100** to be placed on the chest of a patient, and more specifically around the pectoralis major, to allow measurement of lead configuration I, II, or III, or to be placed on the patient's side allowing measurement using a V-lead configuration. Though not shown, multiple body worn physiological monitor **100** units can be used to effectively provide multiple leads. By placing electrodes around the body so that they are not situated directly atop major muscles, both motion noise artifacts and muscle noise artifacts can be prevented. Moreover, by eliminating cables, noise due to cable motion or compression (i.e. triboelectric effect) can be eliminated.

FIG. **1**B shows a side elevated view of physiological monitor **100** having an exemplary attachment mechanism, such as a retention clip **104**, to mechanically attach communications and computation module **102** to the top surface of the disposable electrode module **110**. Flexible printed circuit layer **101** can be made from a thin insulating material, such as according to this embodiment, a 75 micron thick layer of Mylar®. Typically electrical traces (not shown in FIGS. **1**A-**1**D) on flexible printed circuit layer **101** can be further protected by an insulating covering, analogous to a conformal coating. A formed plastic layer or a cloth with adhesive on one side thereof can be used to cover and protect flexible printed circuit layer **101**, as well as to provide an aesthetic outer layer to make the body worn monitor **100** visually appealing.

FIG. **1**C shows a side view of physiological monitor **100** in which the communications and computation module **102** has been affixed to disposable electrode module **110**. FIG. **1**D depicts a view of the underside of exemplary physiological monitor **100** showing one embodiment of disposable electrode module **110** having electrodes **109**. In this embodiment, each electrode **109** comprises electrode gel **103** and conductive surface **404** (FIG. **4**). Together, electrode gel **103** and conductive surface **404** create a half cell, such as, for example, a Silver/Silver Chloride half cell. Also and according to this embodiment, conductive surface **404** can directly accept the electrode gel **103**.

FIG. **2** shows an exploded assembly view of the exemplary body worn physiological monitor **100**. As noted with regard to FIGS. **1**A-**1**D, the body worn physiological monitor **100** includes a removable and reusable communications and computation module **102** and a disposable electrode module **110**, the later including electrode gels **103** for ECG monitoring and batteries **204** to power communications and computation module **102**. A flat planar insulating/adhesive member **105** includes a plurality of openings that are each sized to receive electrode gels **103**. The insulating member **105** provides a bottom side cover for the flexible printed circuit layer **101** and augments adhesion to the human body. Electrode gel **103**, when attached to an appropriate substrate such as silver-silver-chloride or other substrate, can be used to establish a relatively low impedance electrical connection between conductive surface **404** (FIG. **4**) and the patient's skin.

Electrode gels **103** can adhere to a patient's skin. While electrode gel **103** is typically an adhesive electrode gel, the adhesion offered by electrode gels **103** alone might not give a sufficient holding force for non-permanently affixing body worn physiological monitor **100** to a patient. To achieve a better adhesion of body worn monitor **100** to a patient's skin, insulating/adhesive member **105** can be used to non-permanently affix body worn physiological monitor **100** to a patient. Thus, body worn monitor **100** can be applied to a patient in the same way an adhesive strip is applied, such as for example, those adhesive strips sold under the brand name "BAND-AID®". One exemplary type of foam adhesive suitable for affixing a flexible circuit board to a patient is 1.6 mm adhesive foam from Scapa Medical of Bedfordshire, UK. As shown in FIGS. **1**B and **1**C (although not to scale), each of the electrode gels **103** extend sufficiently below adhesive layer **105** in order to ensure good electrical connection with a patient's skin surface (not shown). Tab **106**, FIG. **1**A, allows for easy removal of a protective backing **111** from adhesive layer **105**.

Flexible printed circuit layer **101** can include contacts, such as battery clips (not shown), to receive and connect to batteries **204**. (It is contemplated that in some future embodiments, a single battery can provide sufficient electrical power.) In the exemplary embodiment, as shown in FIG. **2**, batteries **204** can be mounted under respective battery flaps **205** arranged on opposite sides of the flexible printed circuit layer **101**. Alternatively, battery clips (not shown) or battery holders (not shown) can be used to provide both mechanical support and electrical connections for each of the batteries **204**. One type of battery holder suitable for such use, for example, is the model 2990 battery holder, manufactured by the Keystone Electronics Corp. of Astoria, N.Y. Battery cover **107** provides protection for batteries **204** as well as a surface to press upon when applying electrodes **103** to conductive surface **404**. Retention clips **104** can comprise, for example, a plurality of spring fingers with latching clips. Retention clip **104**, affixed to disposable electrode module **110**, can be used to secure reusable communications and computation module **102** to disposable package **110**. Reusable communications and computation module **102** is herein illustrated in a simplified representation, including cover **201**, communications and computation printed circuit board assembly **202**, and base **203**.

FIG. **3** shows a mechanical view of an exemplary reusable communications and computation module **102**, as well as a preferred method for making an electrical connection between flexible printed circuit layer **101** in disposable electrical module **110** and communications and computation printed circuit board assembly **202** situated in reusable communications and computation module **102**. In this exemplary embodiment, communications and computation printed circuit board assembly **202** can include a plurality of press fit and/or soldered conductive sockets **301** for receiving electrical plug **302**, the plug having a corresponding plurality of conductive pins. Each conductive pin shown in plug **302** can correspond to an electrical connection pad on flexible printed circuit layer **101**. A row of mechanical sockets **303** can receive the multi-pin row of plug **302**. Thus, an electrical connection can be made between each pad of flexible printed circuit layer **101** having a conductive post on plug **302** and each corresponding conductive socket **301** on communications and computation printed circuit board assembly **202**. Posts **304** can align and secure each of the cover **201**, communications and computation printed circuit board assembly **202**, and base **203**. Note that in FIG. **3**, a simplified drawing of cover **201** omits slots to receive retention clip **104** to affix communications and computation module **102** to disposable package **110**. A body worn monitor **100** would typically also include retention clip **104** FIG. **2**, or other suitable type of mechanical clip(s), in order to provide a secure mechanical connection between communications and computation module **102** and disposable electrode module **110**.

FIG. **4**A shows one embodiment of flexible circuit board **101** in an expanded (e.g. unassembled) view. Flexible circuit board **101** is formed on a substrate **406**. Substrate **406** can be cut, for example, from a Mylar sheet of suitable thickness. In this embodiment, one battery **204** can be mounted adjacent to a conductive surface **404**. Conductive gel **103** (not shown in FIG. **4**) can be mounted on the exposed conductive side of a conductive surface **404**.

Conductive surface **404** can also be viewed as the electrode portion of a half cell and electrode gel **103** can be considered to be the electrolyte portion of a half cell. In conventional terms of art, the combination of electrode and electrolyte and ECG electrode is typically referred to as a half cell. For example, the combination of a conductive surface **404** and an electrolyte layer (e.g., electrode gel **103**) forms a half cell. For convenient quick reference to a half cell structure, the term "electrode" (assigned reference designator "**109**") is used interchangeably with "half cell" herein. It is understood that in typical embodiments, electrode **109** comprises conductive surface **404** and electrode gel **103**.

Typically, electrodes make use of a circular or square conductive surface. Increasing the ratio of the perimeter of the surface to the area of the surface affects current density distribution and defibrillation recovery.

For convenience, we define the term "annulus" herein and throughout as the region between two simple curves. A simple curve is a closed curve that does not cross itself. Under this definition, an annulus can include substantially square shapes, substantially rectangular shapes, substantially circular shapes, substantially oval shapes, as well as substantially rectangular shapes with rounded corners. Further we include in the definition of annulus, the case of a substantially "U" shaped surface as described by a single closed curve.

One exemplary electrode gel **103** suitable for such use on a body worn monitor is type LT00063 hydrogel supplied by Tyco Healthcare of Prague, Czech Republic. Typically, a conductive surface **404** creates the electrode portion of the half cell. By increasing the ratio of perimeter to area of the circular electrode portion of the half cell, the signal to noise ratio of the input ECG signal can be increased.

As depicted herein on the exemplary circuit layout, two batteries **304** can be connected in series, with one polarity being made available at connection pad **407** from battery connection **402**, battery connection **401** creating the series connection between the two batteries, and connection pad **410** providing the second polarity of the series connected batteries. Note that in some embodiments, a single battery alternatively may be used in lieu of the exemplary arrangement or two batteries can be also wired in parallel, depending on the voltage requirements of a particular communications and computation module **102**.

Connection pads **408** and **409** electrically couple the signals from electrode gels **103** (not shown in FIGS. **4**A-**4**D) via conductive surface **404** and resistive traces **412** to electrical plug **302** (not shown in FIGS. **4**A-**4**D). Electrode contact pad **405** can be connected via resistive trace **413** to connection pad **411** to provide a direct-connected reference electrode (not shown in FIGS. **4**A-**4**D). Traces **412** extending between conductive surface **404** and connection pads **408** and **409** and trace **413** extending between conductive surface **405** and connection pad **411** can be made from resistive materials including resistive metals, carbon, silver ink, powders, paints, or other material of determinable electrical resistance.

Resistive traces on flexible circuit board layer **101** replace the bulky power resistors needed by prior art monitors, having electrodes or sensors connected by wires or leads. These resistive traces should survive multiple defibrillation cycles such that body worn monitor **100** remains functional even after one or more attempts to re-start a patient's heart. In order to survive defibrillation, the resistive traces should dissipate that portion of the potentially damaging defibrillation energy that is coupled into the monitor. This fractional portion of the defibrillation energy typically enters body worn monitor **100** from electrodes **109**, FIG. **1**D (electrodes **109** including conductive surface **404** and electrode gel **103**).

It is desirable that the resistances of the protective resistive traces be in a range between about 1 kilo ohm to about 10 kilo ohms. Below 1 kilo ohm, depending on the resistive material used, it can be more likely that the resistance of the resistive traces **412** and **413** will increase with each successive defibrillation pulse. Above 10 kilo ohms, a high resistance impairs the signal to noise ratio, specifically due to thermal noise, which has a mean square value of 4*k*T*R*BW, where "k" is Boltzmann's constant, "T" is temperature measured in degrees Kelvin, "R" is resistance in ohms, and "BW" is bandwidth, in Hz, which becomes significant relative to the EC-13 requirement that the noise referred to input be less than 30 μV peak-to-valley.

Power dissipation in the herein described traces can be calculated by E^2/R, in which E refers to the potential across the trace and R is the resistance of the trace. R can be calculated by $\rho*L/A$, where ρ is the resistivity of the material used to form the trace, L is the length of the trace, and A is the cross-sectional area of the trace.

In developing resistive traces for use on a flexible printed circuit layer **101**, typically formed on a Mylar substrate **406**, such as shown in FIG. **4**A, various materials were tested. Silver, including silver inks, while useable, was found to be less desirable, because it was difficult to achieve sufficiently thin silver traces on Mylar to achieve high enough resistances. Carbon, including carbon pastes and carbon inks, was also tried and found to be suitable. In order to use carbon however, several additional problems had to be solved. At 1 kilo ohm, the power dissipated by the resistors caused them to degrade across multiple defibrillation cycles. The solution was to make carbon traces in the range of about 8 to 10 kilo ohms. 10 kilo ohm resistances proved to be a good compromise between noise levels, power dissipation by the resistors, and manufacturing tolerances for depositing carbon ink on a Mylar substrate to dissipate the power from multiple defibrillation cycles. To achieve the desired resistance of about 10 kilo ohms (interchangeably represented herein as "10 k" or "10 kΩ"), for a given resistivity of the carbon paste, and given trace width and thickness (height), the length of the trace is then defined. In some cases, such as for traces **412**, the length needed for a trace run, as between conductive surface **404** and connection point **409**, might be longer than the length defined for a particular trace resistance (typically 10 k). In this case, traces can be extended by lengths of silver conductive traces. There can be a short overlay distance, on the order of 5 to 10 mm, in which a silver trace overlaps the carbon trace to provide a more robust connection between the resistive and conductive portions of the traces. Where overlap is used, the overall length of the resistive portion can be adjusted slightly to maintain the desired overall resistance.

Another problem associated with carbon traces was arcing at the interface between the carbon and conductive traces. Arcing was particularly problematic at the abrupt connection between the carbon trace and conductive surface **404**. Arcing was also observed to occur between the end section of the carbon trace and conductive surface **404**. (Electrode gels **103** create the conductive path to the patient through conductive surface **404** and a layer of conductive gel.)

According to one solution to the above noted arcing problem, as shown in FIG. **4**B, a rounded (fillet) section **430** of carbon trace can be added at the interface to conductive surface **404**. A fillet or "tear drop" shape causes the carbon trace to become gradually wider as it connects to conductive surface **404** and relieves the electrical potential stress at the interface.

An alternative solution to the arcing problem is shown in FIG. **4**C, wherein carbon can be laid down beyond the trace (**412**) to include a pattern of conductive surface **404** formed from carbon. A carbon annulus pattern can be deposited before the conductive surface **404** is deposited. Conductive surface **404** can then be deposited as an overlay over the earlier formed carbon annulus shape. Finally, conductive gel **103** can be attached to the conductive surface layer (the carbon layer residing between conductive surface **404** and the Mylar substrate used as flexible circuit board **101**). Both of the aforementioned arcing solutions can be used together. It should also be noted that conductive surface **404** can be

formed from suitable materials other than silver, including, for example, materials such as silver chloride.

Arcing can also occur between the resistive traces and other (typically silver) conductive traces on the flexible circuit board **101**. Trace to trace arcing can be suppressed by allowing sufficient spacing between the traces. Generally a minimum spacing of about 3 mm/kV, as required by ASNI/AAMI DF80:2003 57.10 BB, has been found to be sufficient to prevent trace to trace arcing from a defibrillation event. Closer trace spacing, as close as 0.01 mm/kV, can be employed successfully by first applying an insulating dielectric layer, similar to a conformal coating, over the surface of flexible circuit board **101** that covers most of the substrate and traces. The insulating dielectric layer can be prevented from forming or adhering to conductive surface **404**, such as by use of a mask during application of the insulating layer.

In an alternate embodiment, as depicted in FIG. **4**D, a snap device can be added to conductive surface **404** to accept a manufacture snap-on electrode (not shown), such as, for example, the ConMed Cleartrace line of ECG electrodes including the model 1700 Cleartrace electrode manufactured by the ConMed Corp. of Utica, N.Y. or similar type electrodes made by the 3M Corp. of St. Paul, Minn. When designed to accept a snap-on electrode, the conductive surface **404** is typically smaller than in the previous embodiment. A receptacle snap **432** for receiving the commercial snap-on electrode can be inserted by any suitable method, such as by press fitting or other fastening method, into conductive surface **404**, typically also penetrating through substrate **406**. In this embodiment, arcing can be similarly suppressed in this embodiment by adding a fillet to the carbon-conductive surface interface and/or deposing a conductive surface **404** over a carbon layer as previously described.

Example: Resistive traces and an annulus were tested on a substrate formed from CT3 heat stabilized treated polyester (75 microns thick), such as manufactured by the MacDermid Autotype Corp. of Schaumburg, Ill. Resistive traces were silk screened onto the substrate using 7102 carbon paste conductor from the DuPont Corporation of Wilmington, Del. The carbon paste conductor was deposited through a 43T silk screen mesh. The substrate containing the paste deposit was then cured inside a fan assisted air circulated oven at 120° C. for a period of 5 minutes. The traces formed were about 55 mm long and 2 mm wide, having an overall thickness of about 7.5 microns. The initial measured resistance of each trace was about 14 kilo ohms. After each trace was subjected to 3 defibrillation cycles, the measured resistance increased to about 15 kilo ohms. Over a 3 mm length, the trace widens to about 5 mm, terminating into a carbon annulus with an outer diameter of about 20 mm and an inner diameter of about 10 mm. A silver layer of PF-410 silver ink from the Norcote Corp. of Eastleigh Hampshire, UK was then deposited over the carbon annulus, also to an overall thickness of about 7.5 microns. The deposition of the silver layer was via the silk screen printing method, in which a 90T silk screen mesh was used. The substrate containing the deposited silver ink was then cured inside a fan assisted air circulated oven at 120° C. for a period of 15 minutes. A third dielectric insulating layer comprising SD2460, components A & B (dielectric and hardener), manufactured by Lackwerke Peters GmbH+Co KG of Kempen, Germany, and having a thickness of approximately 13 microns was then deposited over the traces and substrate, but not over the annulus. (The electrodes were formed by attaching a conductive gel to the annulus. The conductive gel used was LT00063 hydrogel from Tyco Healthcare of Prague, Czech Republic.) Again, the silk screen printing process was used to deposit the dielectric layer through a 90T screen mesh. The substrate was placed again into a fan assisted air circulated oven at 120° C. for a period of 30 minutes.

Example: Silver traces for use as conductive (not resistive) traces on a body worn monitor circuit substrate were formed from a silver paste that was silk screened onto a Mylar substrate. 45 mm long traces had a measured resistance in a range of 3.5 to 6 ohms, 75 mm traces had a measured resistance in a range of 6.5 to 13 ohms, and 105 mm traces had a measured resistance in a range of 10 to 16 ohms. The deposition of the silver layer was performed via the silk screen printing method in which a 90T silk screen mesh was used. The substrate containing the deposited silver ink was then cured inside a fan assisted air circulated oven at 120° C. for a period of 15 minutes.

FIG. **15** diagrammatically depicts an exemplary test setup used to simulate the effect of a patient defibrillation on resistive traces. Defibrillator **1501** was used to apply multiple defibrillation shocks of 360 Joules each to the 100 ohm resistor **1502**. The 100 ohm resistor according to this setup simulated a patient's body. Note that most of the defibrillation energy goes into the patient's body by design, to restart the patient's heart. Resistive traces **1503** and **1504** were wired across resistor **1502**, also as shown in FIG. **15**, in order to simulate the electrical circuit that would be formed between the resistive traces in a body worn monitor situated on a patient undergoing defibrillation. Neon bulbs **1506** were used as part of the protection circuitry that can be used with resistive traces in a body worn monitor. 400 ohm safety resistor **1505** was present as a precaution to limit short circuit current in the event of a test setup failure. Both the 100 ohm resistor (simulating human skin resistance) and the 400 ohm safety resistor were used in accordance with medical specification AAMI EC-13. Following 3 defibrillation shocks of 360 Joules each, the measured resistance of the 10 k carbon track changed from 10 k to 11 k following the first shock, to 13.1 k following the second shock, and to 13.2 k following the third shock. The measured resistance of the 9.7 k trace changed from 9.7 k to 11.6 k following the first shock, to 13.0 k following the second shock, and finally to 13.2 k, following the third shock. In a subsequent related test, the 100 ohm resistor was replaced by a closer simulation in the form of a fresh (dead) chicken. The setup otherwise remained the same as shown in FIG. **15**. In this case, the resistance as measured on each of the test resistive traces changed from 10.7 k to 10.25 k, and from 8.5 k to 9.4 k, following multiple defibrillations. During testing, it was also noted that the change in measured resistance of the resistive traces was generally consistent. It was also noted that as a given resistive trace was increased, the (delta R {caused by defibrillation}/R {net trace resistance}) can be minimized.

The screen printing technique for laying down resistive traces was further investigated by printing a plurality of small carbon resistive dots **1601** of about 20 mm in diameter using a 7102 carbon ink applied by a screen printer (not shown). The carbon dots **1601** were laid out on a tray **1602** as shown in FIG. **16**A, for baking in an oven. A manually operated squeegee (not shown) was used to apply the resistive dots **1601** to the tray **1602** through a mask (not shown). It was determined that control of thickness during application was one important factor for controlling the distribution of resistance. It was noted that during manual application, the variation of resistance depended upon the distance between the plurality of dots **1601** and the person applying the resistive paste, and that the pressure applied using the squeegee could also affect the final resistance by a factor of two. It was further noted that "even" heating across the tray **1602** was advantageous during oven drying, although this factor was found to

have less effect on the final dot resistance distribution. A resistance distribution of the baked and measured dots **1601** is shown in the histogram of FIG. **16**B. This testing indicated that production traces laid down on a substrate, such as Mylar, for use in a body worn monitor should preferably be printed using a semi-automatic screen print process, such as by a screen printing mechanical roller process. A digital multimeter ("DMM") with probes placed at each edge of a dot **1601** was used to measure the resistance from one edge of the dot to the other. It was found that uniform application of ink was important to keeping a tight distribution of resistance, with even heating having a smaller influence on the distribution of the resistance of the test dots. Since a trace with too low a resistance has a greater A R/R, and higher probability of failing and very high resistance traces result in worse S/N ratio, it is important to have a reasonably tight tolerance on the trace resistance.

FIG. **5** shows a block diagram representative of one embodiment of the body worn physiological monitor **100**. Physiological sensors **501** (such as electrodes **109** in FIG. **1**D) can be electrically coupled to electromechanical connector **502** (as by the resistive traces **412** shown in FIG. **4**). Connector **502** serves to electrically couple communications and computation module **102** to a disposable electrode module **110** (FIG. **2**). Secondary connector **503** can also electrically couple one or more additional sensors, which can be situated both on and off of disposable electrode module **110**, to electromechanical connector **502** for electrical coupling along with physiological sensor signals **501** to communications and computation module **102** (shown in FIG. **1**) via electromechanical connector **505**. Signals received by the communications and computation module **102** can be electrically coupled into communications and computation module **102** via electronic protection circuits **506** and/or filters, such as ESIS filters **507**.

Signals can be limited or clipped in amplitude, as needed, by protection circuit **506**, and filtered by filter **507**. One or more analog amplifiers **508** can be used to amplify the amplitude limited and filtered signals. In the exemplary body worn ECG monitor, amplifiers **508** can advantageously be differential amplifiers to amplify the difference signal (e.g. the ECG "vector") between two ECG electrodes. The electrical output of amplifiers **508** can be electrically coupled to both PACER circuits **509** and ECG circuits **510**. PACER circuits **509** are described further below. ECG circuits **510** perform several functions, including "trace restore", low pass filtering (anti-aliasing), high pass filtering, and amplification (gain). Low pass filtering filters signals according to the Nyquist criterion to avoid aliasing later when the signals are digitized by analog to digital converter (ADC) **516**. The high pass filter causes the input to be AC coupled from a roll off frequency of about 0.05 Hz, as specified by industry ECG standards. Gain is required to cause the small pre-amplified potentials from physiological sensors (such as electrodes **109**) to more closely match the available dynamic range of the digitizing ADC **516**. Note that ADC **516** can be a dedicated ADC chip or can be included in a microcomputer integrated circuit, such as a microcomputer serving as microprocessor **512**.

A microprocessor, such as microprocessor **512**, is defined herein as synonymous and interchangeable with the terms "microcomputer", "microcontroller", and "microprocessor". Such microprocessors are also interchangeably represented herein as "μP" or "μC". Further, any microprocessor disclosed herein can be replaced by any integrated device that can perform the function of a microprocessor, such as, but not limited to, a field programmable gate array ("FPGA") programmed to perform the functions of a microprocessor.

Typically, one or more differential amplifiers can be dedicated to particular difference voltages associated with physiological sensors **501** or **504**, but it should be noted that one or more amplifiers **508** can also be multiplexed by techniques as known in the art, to serve multiple physiological sensors using a lesser number of amplifiers. Similarly, one or more ADCs **516** can serve two or more signals from physiological sensors **501** or **504** using techniques such as multiplexing in time that is digitizing one physiological sensor difference signal at a time sending a digital result to a next stage one after the other. ECG circuits **510** and PACER circuits **509** are referred to in the plural, since there can be individual circuits for each measured physiological signal, such as for each measured ECG vector.

Electrical power from power source **515** can be regulated by regulator **514** and distributed as regulated voltage **517** to most function blocks (as represented herein by the label "POWER"). Each of these function blocks also has a control ("CTRL") input **511** from microprocessor **512**, allowing these circuits to be disabled, when not needed, in order to save battery power. When viewed over time, most of the ECG waveform does not contain useful information since there is significant "dead time" between heart beats. Therefore, for example, from the end of a "T wave" at the end of one heart beat to the beginning of a "P wave" at the beginning of the next heartbeat, circuits can be powered down (in a device "sleep mode") to save on the order of 60% of the energy stored in the power source that would have otherwise been used during this dead time.

FIG. **17** shows an exemplary ECG waveform. In brief, the P wave can be related to the electrical current causing atrial contraction. The QRS complex can be related to ventricular contraction of the left and right ventricles. The Q wave can be related to electrical current traveling through the intraventricular septum, while the R and S waves can be related to the ventricles contracting. The T-wave is due to the re-polarization of the ventricles. Usually, atrial re-polarization occurs atop the QRS complex, and being much smaller than the QRS complex, is not seen. The ST segment connects the QRS complex to the T-wave. Irregular or missing waves may be indicators of cardiac issues including: ischemic tissue, e.g. due to myocardial infarction, bundle branch block, atrial problems (specifically P-wave abnormalities), pericarditis, and electrolyte disturbance.

Generally, power source **515** can include one or more "button" cells typically disposed on disposable electrode module **110**; however, the block diagram of FIG. **6** shows an embodiment of a body worn physiological monitor **100** where power is supplied by a power source located on, or connected to communications and computation module **102** instead of residing within disposable electrode module **110**.

Beyond power saving considerations, it can also be desirable in some embodiments of body worn physiological monitor **100** to put the microcontroller and/or other circuits, including particularly digital circuits, into a sleep mode during an ADC conversion cycle to minimize pickup of self generated electrical noise and to minimize power use. Preferably, the A/D circuit can acquire multiple samples and buffer the samples, before awakening the microprocessor, which then can batch-process the data. Buffering can be set to match the patient's heart rate, as there is no significant clinical benefit to analyzing every sample as it is taken.

Turning back to the input circuits, typically amplifiers **508** are differential or instrumentation amplifiers useful to selectively amplify desired difference signals between connector terminals (such as an ECG vector), while rejecting common mode signals (such as interfering signals that appear simul-

taneously on both connector terminals). Beyond using a differential amplifier, other techniques can be advantageously used to further reduce common mode pickup (CMR) and thus to improve the common mode rejection ratio (CMRR) of the input amplifier stages of body worn physiological monitor **100**. CMR is of particular concern with regard to body worn physiological monitor **100** because of the proliferation of potentially interfering electromagnetic fields, such as from 50 Hz or 60 Hz AC power line distribution throughout a hospital. For example, many fluorescent ceiling lamp fixtures generate strong 60 Hz alternating current (AC) electromagnetic fields that can appear as common mode signals on physiological sensors **501**, such as ECG electrodes **109**.

FIG. **7**A shows one embodiment in which body worn physiological sensor **501** comprises a plurality of ECG electrodes **109** and **701**. Two electrodes **109** generate an ECG difference potential for patient **703**. A third electrode, reference electrode **701** can be electrically coupled to electronics common **704** (or other potential level) and can be used to improve CMR. In this embodiment, the electronics common **704** (shown as the negative terminal of the battery in FIG. **7**A) can be directly tied to the patient in the vicinity of electrodes **109**. Thus, the electronics common of the electronic circuits in communications and computation module **102** can be made to more closely follow any change in potential in the vicinity of electrodes **109**. Reference electrode **701** can be particularly helpful to ensure that inputs **109** remain within a reasonably narrow common mode range, such as by reducing a 60 Hz potential that would otherwise appear to move the electronics common **704** at 60 Hz with respect to electrodes **109**.

In another embodiment as shown in FIG. **7**B, virtual electrode **702** performs a similar function as previously described with regard to reference electrode **701**. In this embodiment, instead of creating a DC-coupled reference electrode, electrode **701** is replaced by the capacitive coupling between flexible printed circuit layer **101** and the patient **703**, resulting in a virtual electrode **702** with an AC coupled common. Such AC coupling increases with decreased distance between flexible printed circuit layer **101** and the patient and can advantageously reduce 60 Hz common mode signals (AC signals).

In yet another version of a directly connected electrode **701**, as shown in FIG. **8**A, electrode **701** can be actively driven by an electrical output from communications and computation module **102**. Typically, an operational amplifier (OpAmp) or other type of amplifier can be used to create a "driven lead". Driven lead circuits can be used to further improve CMR over passive electrodes **701** as shown in FIG. **7**A. An exemplary circuit suitable for use to drive an electrode **701** is shown in FIG. **8**A. Amplifiers (OpAmps) **810** and **811** buffer the high impedance signals from electrode **1** and **2** (exemplary electrodes **109**). Difference amplifier **508** conveys the difference signal (such as an ECG vector) as previously described. The two 10 kilo ohm resistors provide an average of the common mode signals appearing simultaneously at the inputs of buffer amplifiers **810** and **811**. The inverting low pass filter built around OpAmp **812** inverts the averaged common mode pickup signal (at electrodes **1** and **2**) and applies that signal out of phase (180° phase shifted) to a directly connected driven electrode (such as electrode **701**). By applying the average common mode signal to the driven electrode, amplifier **812** effectively suppresses common mode signals at electrodes **1** and **2** within the effective bandwidth of the negative feedback loop by active noise cancellation. In theory, a virtual electrode **702** could be similarly driven, but the voltage requirements to drive a capacitively coupled common electrode are high enough to make a "driven virtual electrode" a less practical option. Thus, it can be seen that a reference electrode can be a passive connection or an actively driven connection.

It can also be desirable to have more than one CMR technique available. For example, in a low noise environment, a lower power reference electrode might be used for CMR. Then if the noise increases to a level where the reference electrode provides insufficient CMR, the body worn monitor can switch to a driven lead more suitable for CMR in a high noise environment. In this embodiment, a particular CMR configuration can be selected by electronic switching. FIG. **8** shows one such exemplary switching block represented as reference electrode switch **801**. Microprocessor μP) **512** can control reference electrode switch **801** to select direct connected electrode **701**, virtual electrode **702**, or directly connected electrode **701** additionally driven by a driven lead circuit **802**. It should also be noted that in the embodiment of FIG. **8**, when virtual electrode **702** provides sufficient CMR, electrode **701** can be used as a third electrode, thus allowing body worn monitor **100** to simultaneously measure two different heart vectors.

FIG. **9** shows one embodiment of an exemplary defibrillation protection circuit (**506**) and ESIS filter **507**. As shown in FIG. **9**, electrodes **109** can be connected via input resistors R**91** and R**92**. Gas discharge tubes, such as neon bulbs L**1** and L**2**, can be used for over voltage protection by firing at a designed voltage to prevent large potentials from appearing at the input leads to amplifier **508**. The gas discharge tubes can be disposed on either disposable electrode module **110** or on the communication and computation module **102**. Defibrillation protection resistors R**91** and R**92** can further reside in disposable electrode module **110**, such as in the form of the resistance of traces **412**.

ESIS filters **507** can be used to satisfy AAMI standard EC13 on Electrosurgical Interference Suppression (ESIS). Standard EC13 addresses the ability of an ECG monitor to display and process ECG signals in a satisfactory manner while connected to a patient on whom an electrosurgical device is being used. Without such suppression, the high RF output of an electrosurgical device can render ECG monitoring impossible and or render the monitor unusable. Resistors R**93** to R**98** and capacitors C**91** to C**96** form cascaded low pass filter sections (e.g. R**93**-C**1**). Three cascaded single pole filters are shown on each input leg of amplifier **508** as an example; more or less stages can also be used. It is also not necessary for each section of the cascaded filter to have identical values or roll off points in the frequency domain to create a specific response, e.g., Bessel, Chebychev, or other filter response known to those skilled in the art. Also, ESIS filters are not limited to cascaded single pole filters and can take other forms as known in the art.

Test circuit **906** can provide a relatively sharp transient signal for testing the PACER circuit described below as part of a body worn monitor **100** "power on self test". Resistors R**99** and R**100** can pull the output of the differential amplifier **508** allowing the microcontroller (**512**) to detect which electrode, if any, has detached, much as a "lead failed" detection is accomplished by ECG monitors having leads. Body worn monitor **100** does not use leads, but it is still possible for one or both of the physiological sensors to move free of a patient's body. Such disconnects can occur in situations in which body worn monitor **100** partially moves away from the body to which it is non-permanently affixed. The input impedance at one or both of the electrodes **109** changes in a sensor off (sensor disconnect) event. When a patient is attached, amplifier **508** typically has an output voltage of near zero volts. However, if one of the electrodes **109** comes off, resistors R**99**

or R**100** cause the output of amplifier **508** to move to a most positive output ("positive rail") or to a most negative output ("negative rail"). Note that the negative rail can be a small voltage near zero, in the case of single supply circuit operation, and that both inputs could be pulled to the same rail. Lead-fail detection can also be analyzed to determine when the device is attached to the patient and then to automatically enter full operational mode. Such analysis can be done at a low frequency.

The ESIS filter **507** also can cause a stretching in the time domain of a pacer pulse so that the event is recorded by at least one sample, even though the pacer pulse itself is of small duration compared to the ADC sample rate and the pacer pulse is likely to occur between samples.

FIG. **10** shows an alternative circuit to accomplish over voltage protection, such as is required during defibrillation. In FIG. **10**, diodes **1001** prevent the electrode potentials from going much more than one diode voltage drop above Vcc or below ground and resistors R**91** and R**92** limit current. Using circuit protection, such as gas discharge tubes L**1** and L**2** (FIG. **9**) and/or diodes **1001** (FIG. **10**) combined with resistances R**91** and R**92**, typically in the form of resistive traces **412**, a body worn device can survive multiple defibrillation cycles of at least 360 joules.

PACER circuit **509** detects pacemaker pulses. One reason to detect a pacemaker is to prevent the ECG circuitry from inadvertently registering the regular pulses from a pacemaker as an actual heart rhythm. Separation of a pacemaker signal from signals generated by the heart is important both to generate accurate ECG analysis results as well as to correctly detect the absence of an actual heart rhythm. For example, a pacemaker continues to function even where a human heart has completely failed.

A pacer event (pacemaker signal) is typically a narrow pulse typically less than 100 microseconds wide. Because of the capacitance between the pacer in a patient and an ECG circuit, an otherwise relatively square pacer pulse as administered at the patient's heart by a pacemaker, can appear to an ECG monitor as a pulse with a negative undershoot and an exponential return to zero that could inadvertently mimic a QRS signal. A pacer signal, however, can be recognized by an analog differentiator and alert microprocessor **512** to the presence of a pacer and to disregard the refractory period of the corresponding R-C recovery due to the pacer signal. The pacer detection circuit or PACER circuit can generate a microprocessor interrupt to inform the microprocessor that a pacer event occurred and to mark a corresponding physiological signal in time as related to a pacer event. PACER circuit **509** can also cause one or more pacer related circuits to automatically power down for power saving, where it is determined that a patient is not using a pacemaker.

FIG. **11** shows an algorithm useful to determine if the pacer circuit should be enabled. A typical PACER detection circuit uses a significant percentage of the energy available from a power source such as batteries **204**. If a PACER signal is not detected, such as at power up of body worn monitor **100**, the pacer circuit can be automatically disabled allowing for a longer battery life. Since typical PACER circuits can use several amplifiers (OpAmps), they can consume up to one third of the analog power, therefore securing the PACER circuits when they are not needed (i.e. the patient does not have a pace maker) can cause a significant improvement in battery life. The algorithm also can also provide checks to determine if a demand type pace maker begins operation (which might be inactive at power up of body worn monitor **100**) by analyzing beat variability. While it can be advantageous to have the body worn device automatically sense the presence of a pacemaker and to enable the PACER detection circuit, the choice as to whether to enable or disable the PACER circuit can also be done by externally configuring the body worn device. Such external configuration can be done through a hardwired communication connection cable or via communications and computation module **102**, in which communications and computation module **102** is a two-way radio transceiver communication device capable of receiving a configuration command sent for a remote radio transceiver. The radio could be 802.11 compliant, but generally would use a lighter-weight (simpler) protocol that can be more energy efficient. A suitable lighter weight protocol could be proprietary, or standards-based, such as ZigBee or Bluetooth. A body worn physiological monitor **100** is particularly well suited for use in hospital environment as part of an integrated wireless monitoring network. The details of such monitoring networks are disclosed in U.S. patent application Ser. No. 11/031,736 entitled, "Personal Status Physiological Monitor System and Architecture and Related Monitoring Methods", which is incorporated by reference herein in its entirety.

FIG. **12** shows a high pass filter (HPF) suitable for use in ECG circuits block **510**. An advantage of a 0.5 Hz HPF is faster recovery from DC offsets due to patient movement, defibrillation, electrocuatery, etc. However ST segment analysis is negatively impacted if HPF cutoff is greater than about 0.05 Hz. Thus, it is preferable to have the ability to change between a 0.5 and 0.05 Hz cutoff frequency. The high pass filter of FIG. **12** is implemented by a low pass filter configured as an inverting amplifier in a negative feedback circuit to give a net effective high pass transfer function from circuit input to output. The corner frequency of the composite filter can be adjusted by switching in resistor R**2'**. Alternatively, S**1** can be switched at a periodic rate to place a duty cycle on C. Note that the frequency of switching of SI should be fast with respect to the corner frequency of the anti-aliasing low pass filter. The graphs A-D of FIG. **13** further illustrate the performance of the exemplary filter of FIG. **12**. These graphs show normalized amplitude on the vertical axis plotted against frequency on the horizontal axis. FIG. **13**, graph A represents a raw input signal. FIG. **13**, graphs B and C are Bode Plots representing the high and low-pass filter sections. After applying filter responses B & C to input Data A, filtered data D is the result. The HPF cutoff can be 0.5 Hz or some lower value depending on whether R**2'** is switching in or if C is duty cycled.

Another method to achieve this frequency change is to use digital filters implemented on Microprocessor **512** to reverse the effects of the 0.5 Hz HPF, then implement a digital HPF at a lower cutoff frequency, 0.05 Hz, for example. The response of the 0.5 Hz filter should be known to implement the inverse filter. This response can be measured using microprocessor **512** to trigger the test circuit **906** to create an impulse, H(s). The inverse response is the [1-H(s)] (FIG. **13**, graph E) and this inverse filter can be digitally implemented by methods familiar to those skilled in the art. H'(s) is the frequency response of the new HPF with lower cutoff frequency, nominally 0.05 Hz. The digital filter for H'(s) is digitally generated (F) and applied along with [1-H(s)] (FIG. **13**, graph E), resulting in the frequency response displayed in FIG. **13**, graph G. A high pass filter suitable for use in ECG circuits block **510** can be implemented in full or in part by software that can run on microprocessor **512**.

FIG. **14** shows how a body worn monitor **100** configured as an ECG monitor can be situated on a patient in at least two different orientations to measure different heart vectors. A primary heart vector is measured by orientation from the patient's right shoulder to the left hip, as shown by position

1401. An alternative position **1402** can be more suitable where there is injury or where patient anatomy is such that it causes the preferred position **1401** to be less desirable. Also, body worn monitor **100** can be affixed to the side of patient **703** (similar to a measurement made by a conventional ECG "V" lead) or back of a patient **703** (such as where a patient needs to sleep on their stomach) to monitor still other ECG vectors (not shown). In effect, a body worn monitor **100** can be placed to pick a particular vector that can be traversed by the electrodes **109**. For example at least the first three primary heart vectors, i.e. I, II, and III, can be made conveniently available in this manner.

While illustrated with an internal battery, it is important to note that a body worn physiological monitor **100** can be powered by either an internal power source only, an external power source only, or by an internal or an external power source. An internal power source can be a renewable power source, such as a rechargeable battery.

Another type of internal power source is a Peltier device operated in reverse, also called a Seebeck device. Seebeck discovered that a conductor generates a voltage when subjected to a temperature gradient. Thermoelectric couples are solid-state devices capable of generating electrical power from a temperature gradient, known as the Seebeck effect. (By contrast, the Peltier effect refers to the situation where electrical energy is converted into a temperature gradient.) A Seebeck device "couple" consists of one N-type and one P-type semiconductor pellet. The temperature differential causes electron flow from hot to cold in the N-type couple and hole flow from hot to cold in the P-type couple. To create an electromotive force (EMF), the following connections are made: On the cold side (i.e. the side that is exposed to room temperature) the pellets are joined and on the hot side (i.e. the patient side), the pellets are connected to a load, such as the computation and communication module **102**. The open circuit voltage of a Seebeck device is given by $V=S\Delta T$, in which S is the Seebeck coefficient in volts/° K and ΔT is the temperature difference between the hot and cold sides. It is a challenge today to completely power the computation and communication module **102** from a Seebeck device that is of the same size as the computation and communication module **102**. Presently, a Seebeck device may only provide supplementary power, but as electronics migrate toward lower power and Seebeck coefficients and thermocouple densities improve, a Seebeck device can be a viable long-term power solution for a patient-worn monitor. Other methods of generating energy, such as mechanical (as is used in some wrist watches) and solar, can also be viable methods for providing a renewable self-contained power source for a body worn monitor.

Turning to analysis routines suitable for use on a body worn monitor, typically, ECG beat picking, such as by using wavelet or Fourier transforms and/or matched filter analysis in the time domain can be computationally expensive. Modeling the QRS pulse as three triangles with alternating polarities creates a rough matched filter for the QRS pulse. Taking the second derivative results in impulse functions at the peaks of the triangles (where the first derivative is discontinuous), and all other points are zero. The second derivative method also makes the convolution with incoming data extremely efficient as most of the multiplies have a 0 as the multiplicand and requires minimal computation. The result can then be integrated twice to produce a matched-filter output, which can be fed into the beat-picking algorithm that provides fiducial marks. Using a second matched filter that is sinusoidal in shape and with appropriate discriminators, the system can provide indications of Life Threatening Arrhythmias (LTA); that is, Asystole, Vfib, and Vtach. While the accuracy of this system is less competitive with a high-end Arrhythmia solutions such as those provided, for example, by Mortara, the filters can be tuned to err toward false positives and upon a positive LTA response, activate transmission of full waveforms.

Research has also shown that analysis of the R-R portion of the ECG waveform interval statistics can provide a method to predict atrial flutter. Applying this and other low-computational cost methods can allow a body worn monitor device to begin transmitting full waveforms for either clinical or algorithmic analysis by a more powerful engine, when the probability of other arrhythmias is high. Transmitting only the R-R intervals of ECG waveforms is an example of a lossy data compression method. R-R intervals comprise a string of data and the string of data can also be compressed. Lossless or lossy data compression of the entire waveform can be implemented to save battery life, including not transmitting (or perhaps not even sampling) data between the T and the P wave. Because data compression results in less data to transmit, the power saved may offset the computation cost of the data compression.

While we have referred often to ECG applications herein, the application of low-intensity computational methods as a power saving measure apply equally well to other types of low power-sensors, including, but not limited to EEG, SPO_2, temperature, and invasive or non-invasive blood pressure measurements. Whether the body-worn medical-grade monitor performs complex analysis or simply compares a single numeric value to a single numeric limit, the device can function in a low-power radio state until a predetermined threshold is exceeded. A body worn monitor can also periodically send data or send data upon external request. Additionally, external devices can send commands to modify the operating parameters and thresholds.

Turning to other communication matters, it may be that adverse events occur in which no uplink is available. In a case of no uplink (failed communications), the body worn monitor can buffer time-stamped waveforms corresponding to any adverse events. The buffers can also store waveforms for later analysis in which this storage is triggered by the patient when the patient recognizes a condition, such as chest pain. In the case of an alarm that occurs when there is no uplink, alarms can be configured to be latched until confirmed by a clinician. Preferably, non-continuous data are marked (time stamp, sample number) to allow correlation of non-continuous data with continuous data and data are also marked to indicate when an alarm was initiated for later data analysis, including algorithm performance analysis.

In those instances in which many body worn monitor devices are used in close proximity to one another, there can be concern that the reports from one body worn monitor might be interchanged with reports from another body worn monitor. The body worn monitor presented herein, can be configured with a patient context (i.e. name, room number, patient ID, age, etc) and can maintain that context for as long as the monitor is connected to the patient to avoid such problems. The body worn monitor can determine the status of its connection to the patient via a continuous vital signs monitor, pressure, temperature, galvanic response, or similar input. Upon detection of a loss of connection with a patient, the device can, depending upon different variable settings, either erase the patient context or when re-connected to the patient, require the care giver to confirm the patient context. When the body worn monitor is initially powered up or connected to a

patient, it can have a time holdoff for alarms to prevent false alarms (e.g. low heart rate, lead-fail detection) while the system stabilizes.

Regarding firmware updates, where there are large numbers of body worn monitors in a hospital, it can be problematic to keep them all updated with the latest version of firmware. One solution to this problem is to provide a wireless update ability for downloading and installing new firmware and/or configurations into all of the body worn monitors.

While the present invention has been particularly shown and described with reference to the preferred mode as illustrated in the drawings, it will be understood by one skilled in the art that various changes in detail may be effected therein without departing from the spirit and scope of the invention as defined by the following claims. It is further understood that several aspects of the invention, including, but not limited to, defibrillation protection resistors, pacer detect circuit disabling, methods for ECG signal high pass filtering, and various other low power modes are not limited to body worn monitors, and can be used in ECG monitors of any type.

What is claimed is:

1. An ECG monitor comprising:

a plurality of electrical connections including at least one electrode, the electrical connections being couplable to a skin surface to measure patient heartbeat signals;

a power source;

at least one current-limiting defibrillation protection resistor, said at least one current-limiting defibrillation protection resistor comprising a resistor screened onto a substrate; and

an ECG electronics module, the ECG electronics module receiving and processing patient heartbeat signals from the plurality of electrical connections,

wherein the at least one current-limiting defibrillation protection resistor is electrically disposed between at least one of the plurality of electrical connections and the ECG electronics module.

2. The ECG monitor of claim **1**, wherein the at least one current-limiting defibrillation protection resistor comprises a resistor screened onto a flexible substrate.

3. The ECG monitor of claim **1**, wherein a mechanical interface is defined from the at least one series current-limiting resistor to the at least one ECG electrode, the mechanical interface including a filleted edge.

4. The ECG monitor of claim **1**, wherein a mechanical interface is defined from the at least one series current-limiting resistor to the at least one ECG electrode, the mechanical interface including a plurality of overlapped layers.

5. The ECG monitor of claim **4**, wherein the plurality of overlapped layers comprise a carbon resistive layer screened over a conductive surface, the carbon resistive layer having substantially the same shape as the conductive surface.

6. The ECG monitor of claim **1**, the ECG monitor further comprising a pacer detect circuit to detect the presence or absence of a pacemaker, the ECG electronics module drawing power as an electrical load on the power source wherein the pacer detect circuit, upon detection of the absence of a pacemaker signal in a patient being monitored by the ECG monitor, causes the ECG electronics module to disable the pacer detect circuit in order to reduce the electrical load on the power source.

7. The ECG monitor of claim **6**, wherein the power source is a battery.

8. The ECG monitor of claim **1**, wherein the ECG electronics module includes a microprocessor to process the heartbeat signals, wherein an algorithm running on the microprocessor causes the ECG monitor to enter a low power mode that disables at least one circuit of the ECG electronics module, from the end of a "T wave" at the end of one heartbeat to the beginning of a "P wave" at the beginning of the next heartbeat, in order to reduce said electrical load on the power source.

* * * * *