(19) Japan Patent Office (JP)

(12) **KOKAI LAID-OPEN PATENT PUBLICATION (A)**

(11) Patent Application Publication No.
Patent Application No. 2004-121360
(P2004-121360A)

(43) Publication Date: **April 22, 2004 (2004.4.22)**

(51) Int.Cl.[7]	F I			Theme Code (Reference)
A61B 5/0428	A61B 5/04	310B		4C027
A61B 5/04	A61B 5/04	R		4C341
A61B 5/0404	A61G 12/00	Z		
A61G 12/00	A61B 5/04	310H		

Examination Request: Not requested Number of Claims: 9 OL (Total of 14 pages)

(21) Application No. Patent Application No. 2002-286817 (P2002-286817)

(22) Application Date September 30, 2002 (2002.9.30)

F Term (Reference) 4C027 AA02 BB03 CC00 GG16 GG18 HH06 JJ03 KK01 4C341 LL30

(71) Applicant 000230962
Nihon Kohden Corporation
1-31-4, Nishi-Ochiai, Shinjuku-ku, Tokyo

(74) Representative 100074147
Patent Attorney Takashi Honda

(72) Inventor Fumiyuki Matsumura
Nihon Kohden Corporation, 1-31-4, Nishi-Ochiai, Shinjuku-ku, Tokyo

(72) Inventor Iwao Takahashi
Nihon Kohden Corporation, 1-31-4, Nishi-Ochiai, Shinjuku-ku, Tokyo

(72) Inventor Shigehiro Nishiwaki
Nihon Kohden Corporation, 1-31-4, Nishi-Ochiai, Shinjuku-ku, Tokyo

(54) [Title of Invention] BIOELECTRIC POTENTIAL DETECTOR AND BIOMETRIC INFORMATION SYSTEM

(57) [Abstract]
[Problem to be Solved] To provide a bioelectric potential detector that can measure bioelectric potentials (electrocardiograms) even while a patient/subject is taking a shower or bath, while also taking cost and hygiene into consideration. To further provide a system that can notify medical staff or family members and allow prompt treatment and response when detected bioelectric potentials (electrocardiograms) become abnormal.
[Means to Solve the Problem] The bioelectric potential detector comprises a disposable bioelectrode pad for detecting bioelectric potentials and a reusable signal processor for processing the bioelectric potential signals detected by the bioelectrode pad. The bioelectrode pad and the signal processor are detachable, and the portion that transmits the bioelectric potentials from the bioelectrode pad to the signal processor has a waterproof structure. Bioelectric potential signals are transmitted wirelessly from the signal processor and received by a portable monitor or the like. When the bioelectric potential signals are abnormal, an alarm is triggered.
[Selected Figure] Figure 1

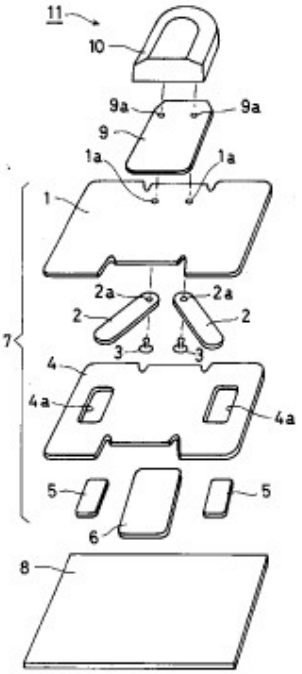

[SCOPE OF THE PATENT CLAIMS]

[Claim 1]

A bioelectric potential detector, comprising a disposable bioelectrode pad for detecting bioelectric potentials

and a reusable signal processor for processing the bioelectric potential signals detected by the bioelectrode pad,

wherein the bioelectrode pad and the signal processor are detachable,

and a portion that transmits the bioelectric potentials from the bioelectrode pad to the signal processor has a waterproof structure.

[Claim 2]

The bioelectric potential detector, comprising the disposable bioelectrode pad for detecting bioelectric potentials,

and the reusable signal processor for processing the bioelectric potential signals detected by the bioelectrode pad,

wherein the bioelectrode pad and the signal processor are detachable,

and the portion that transmits the bioelectric potentials from the bioelectrode pad to the signal processor is surrounded by adhesive tape, thus making the transmitting portion waterproof.

[Claim 3]

The bioelectric potential detector, comprising the disposable bioelectrode pad for detecting bioelectric potentials,

and the reusable signal processor for processing the bioelectric potential signals detected by the bioelectrode pad,

wherein the bioelectrode pad and the signal processor are detachable,

and a circular protrusion that is provided on a signal processor side of the portion that transmits the bioelectric potentials from the bioelectrode pad to the signal processor so as to cover the transmitting portion, and the circular protrusion abuts against a surface of the bioelectrode pad so as to make the transmitting portion waterproof.

[Claim 4]

The bioelectric potential detector, comprising the disposable bioelectrode pad for detecting bioelectric potentials,

and the reusable signal processor for processing the bioelectric potential signals detected by the bioelectrode pad,

wherein the bioelectrode pad and the signal processor are detachable,

and a suction cup is provided on the signal processor side of the portion that transmits the bioelectric potentials from the bioelectrode pad to the signal processor so as to cover the transmitting portion, and the suction cup is attached to the surface of the bioelectrode pad so as to make the transmitting portion waterproof.

[Claim 5]

A biometric information system, comprising the disposable bioelectrode pad for detecting bioelectric potentials, and the reusable signal processor for processing and wirelessly transmitting the bioelectric potential signals detected by the bioelectrode pad, wherein the bioelectric potential detector with the

bioelectrode pad and the signal processor are detachable, and the portion that transmits the bioelectric potentials from the bioelectrode pad to the signal processor has a waterproof structure, and a monitor that receives the bioelectric potential signals transmitted wirelessly from the signal processor of the bioelectric potential detector, determines whether the bioelectric potential signals are abnormal, and notifies that the bioelectric potential signals are in an abnormal state if the bioelectric potential signals are in an abnormal state.

[Claim 6]

The biometric information system, comprising the disposable bioelectrode pad for detecting bioelectric potentials, and the reusable signal processor for processing and wirelessly transmitting the bioelectric potential signals detected by the bioelectrode pad, wherein the bioelectric potential detector with the bioelectrode pad and the signal processor are detachable, and the portion that transmits the bioelectric potentials from the bioelectrode pad to the signal processor has a waterproof structure, the monitor that receives the bioelectric potential signals transmitted wirelessly from the signal processor of the bioelectric potential detector, determines whether the bioelectric potential signals are abnormal, and transmits alarm information notifying at a minimum that the bioelectric potential signals are in an abnormal state if the bioelectric potential signals are in an abnormal state,

and a portable terminal that receives the alarm information transmitted by the monitor and triggers an alarm.

[Claim 7]

The biometric information system, comprising the disposable bioelectrode pad for detecting bioelectric potential, and the reusable signal processor for processing and wirelessly transmitting the bioelectric potential signal detected by the bioelectrode pad, wherein the bioelectrode pad and the signal processor are detachable, and the portion that transmits the bioelectric potentials from the bioelectrode pad to the signal processor has a waterproof structure, and a receiver that receives the bioelectric potential signals transmitted wirelessly from the signal processor of the bioelectric potential detector, determines whether the bioelectric potential signals are abnormal, and transmits the alarm information notifying that the bioelectric potential signals are in an abnormal state if the bioelectric potential signals are in an abnormal state,

and the portable terminal that receives the alarm information transmitted by the receiver via a communication line and triggers the alarm.

[Claim 8]

The biometric information system, comprising the disposable bioelectrode pad for detecting bioelectric potentials, and the reusable signal processor for processing the bioelectric potential signals detected by the bioelectrode pad, determining whether the bioelectric potential signals are abnormal, and wirelessly transmitting alarm information notifying at a minimum that the bioelectric potential signals are in an abnormal state if the bioelectric potential signals are in an abnormal state, wherein the bioelectrode pad and the signal processor are detachable, and the portion that transmits the bioelectric potentials from the bioelectrode pad to the signal processor has a waterproof structure,

and the portable terminal that receives the alarm information transmitted wirelessly from the signal processor of the bioelectric potential detector and triggers an alarm.

[Claim 9]

The biometric information system, comprising the disposable bioelectrode pad for detecting bioelectric potentials, and the reusable signal processor for processing the bioelectric potential signals detected by the

bioelectrode pad, wherein the bioelectrode pad and the signal processor are detachable, and the portion that transmits the bioelectric potentials from the bioelectrode pad to the signal processor has a waterproof structure, and the portable terminal receives the alarm information transmitted wirelessly from the signal processor of the bioelectric potential detector, and displays the bioelectric potential signal.

[DETAILED DESCRIPTION OF THE INVENTION]

[0001]

[Technical Field of the Invention]

This invention relates to a bioelectric potential detector having a waterproof structure and a biometric information system that alerts medical staff or the like when an abnormality occurs in the bioelectric potential signals detected by the bioelectric potential detector.

[0002]

[Prior Art]

In the medical field, bioelectrical potential information, especially electrocardiogram information, is one of the most important types of biometric information for assessing the condition of subjects/patients.

Hospitalized patients always wear bioelectrodes on their chest and other parts of their body to measure electrocardiograms in the hospital, and detected electrocardiogram signals are transmitted wirelessly to a monitor. The patients/subjects at home also wear bioelectrodes on their chest or other parts of their body to measure electrocardiograms with a Holter monitor and store them in memory.

The subjects/patients wanted to be able to take a shower or bath while wearing the bioelectrodes, which required a waterproof bioelectric potential detector. When such a waterproof bioelectric potential detector was not provided to the subjects/patients, they sometimes removed the bioelectrode that they had been wearing for just that purpose in order to take a shower or bath.

However, while taking a shower or bath, their heart may be strained, resulting in tachycardia or arrhythmia. In addition, immediately after showering or bathing, the body temperature drops suddenly, which puts a strain on the body and may cause sudden changes in condition, such as dizziness, anemia, or arrhythmia.

Therefore, it is desirable to continuously measure electrocardiograms during, as well as after, showering and bathing.

[0003]

The applicant has previously proposed a cable-free biometric signal transmitter for measuring electrocardiograms (i.e., Patent Document 1). This device is equipped with a biometric mounting portion (equivalent to a signal processor) and a support (equivalent to a bioelectrode pad), detects bioelectric potentials using the bioelectrodes of the support, transmits the bioelectric potential signals from the biometric mounting portion, and wirelessly transmits the bioelectric potential signals using a loop antenna built into the biometric mounting portion.

[0004]

In addition, a device for measuring bioelectric potential is described in Patent Document 2. Here, the device is comprised of a conduction portion (equivalent to an electrode element), a power source, a potential difference detection portion, and a wireless transmitting/receiving portion. The data concerning potential differences is then transmitted wirelessly to an electrocardiograph. The power source, the potential difference detection portion, and wireless transmitting/receiving portion are embedded in a sealing material. However, they are not detachable from the conduction portion, which is equivalent to the electrode element.

Therefore, it is unhygienic to reuse the device that has been used once, and, conversely, it is uneconomical to use it as a disposable device.

[0005]

[Patent Document 1]

Japanese Patent Application No. 11-262476 (General)

[Patent Document 2]

Japanese Patent Application No. 2001-54506 (General)

[0006]

[Problem to Be Solved by the Invention]

In order to enable hospitalized or home-bound patients/subjects to measure electrocardiograms while showering or bathing, a waterproof bioelectric potential detector is first required. Moreover, it is preferable that the bioelectric potential detector be cable-free and compact.

Furthermore, if the condition of the subjects/patients suddenly changes during or after showering, it is necessary to provide a system that allows medical staff or family members to quickly treat and respond.

Cost and hygiene aspects also need to be taken into consideration.

The present invention was made in order to achieve these objectives. The present invention also provides a bioelectric potential detector having a structure that takes cost and hygiene into consideration, and a waterproof structure, and a system that notifies medical staff or family members so that prompt treatment and response can be taken if the detected bioelectric potential signals become abnormal.

[0007]

[Means to Solve the Problem]

In order to solve the above problems, the bioelectric potential detector of the present invention comprises

a disposable bioelectrode pad for detecting bioelectric potentials,

and a reusable signal processor for processing the bioelectric potential signals detected by the bioelectrode pad,

wherein the bioelectrode pad and the signal processor are detachable,

and the portion that transmits the bioelectric potentials from the bioelectrode pad to the signal processor has a waterproof structure (Claim 1).

With this configuration,

the bioelectrode pad is hygienic because it is disposable, the signal processor is economical because it is reusable, the reusable signal processor and the disposable bioelectrode can be easily attached and detached before and after use, and the portion transmitting the bioelectric potentials from the bioelectrode pad to the signal processor is waterproof.

[0008]

Alternatively, the bioelectric potential detector of the present invention comprises

a disposable bioelectrode pad for detecting bioelectric potential,

and a reusable signal processor for processing the bioelectric potential signals detected by the bioelectrode pad,

wherein the bioelectrode pad and the signal processor are detachable,

and the portion that transmits the bioelectric potentials from the bioelectrode pad to the signal processor is surrounded by adhesive tape, making the transmitting portion waterproof (Claim 2).

With this configuration,
the bioelectrode pad is hygienic because it is disposable, the signal processor is economical because it is reusable, the reusable signal processor and the disposable bioelectrode can be easily attached and detached before and after use, and the portion transmitting bioelectric potentials from the bioelectrode pad to the signal processor is waterproofed by the adhesive tape attached thereto.

[0009]

Alternatively, the bioelectric potential detector of the present invention comprises
a disposable bioelectrode pad for detecting bioelectric potentials,
and a reusable signal processor for processing the bioelectric potential signals detected by the bioelectrode pad,
wherein the bioelectrode pad and the signal processor are detachable,
and a circular protrusion is provided on the signal processor side of the portion that transmits the bioelectric potentials from the bioelectrode pad to the signal processor so as to cover the transmitting portion, and the circular protrusion is abutted against the surface of the bioelectrode pad so as to make the transmitting portion waterproof (Claim 3).
With this configuration, the bioelectrode pad is hygienic because it is used as a disposable device, the signal processor is economical because it is reusable, the reusable signal processor and the disposable bioelectrode can be easily attached and detached before and after use, and the portion transmitting the bioelectric potential from the bioelectrode pad to the signal processor is waterproofed by being covered by the circular protrusion.

[0010]

Alternatively, the bioelectric potential detector of the present invention comprises
a disposable bioelectrode pad for detecting bioelectric potentials,
and a reusable signal processor for processing the bioelectric potential signals detected by the bioelectrode pad,
wherein the bioelectrode pad and the signal processor are detachable,
and a suction cup is provided on the signal processor side of the portion that transmits the bioelectric potentials from the bioelectrode pad to the signal processor so as to cover the transmitting portion, and the suction cup is attached to the surface of the bioelectrode pad so as to make the transmitting portion waterproof (Claim 4).
With this configuration,
the bioelectrode pad is hygienic because it is disposable, the signal processor is economical because it is reusable, the reusable signal processor and the disposable bioelectrode can be easily attached and detached before and after use, and the portion transmitting the bioelectric potential from the bioelectrode pad to the signal processor is waterproofed by the suction cup.

[0011]

The biometric information system of the present invention is characterized in that it is composed of
a disposable bioelectrode pad for detecting bioelectric potentials, and a reusable signal processor for processing and wirelessly transmitting the bioelectric potential signals detected by the bioelectrode pad, wherein the bioelectrode pad and the signal processor are detachable, and the portion that transmits the bioelectric potentials from the bioelectrode pad to the signal processor has a waterproof structure, and a

monitor that receives the bioelectric potential signals transmitted wirelessly from the signal processor of the bioelectric potential, determines whether the bioelectric potential signals are abnormal, and notifies the user that the bioelectric potential signals are in an abnormal state if the bioelectric potential signals are in an abnormal state (Claim 5).

With this configuration,

the bioelectric potential detector is hygienic because the bioelectrode pad is disposable, the signal processor is economical because it is reusable, and the reusable signal processor and the disposable bioelectrode can be easily attached and detached before and after use and are waterproofed. The bioelectric potential signals are transmitted wirelessly from the bioelectric potential detector, and the monitor receives the wirelessly transmitted bioelectric potential signals and reports an abnormal state.

[0012]

Alternatively, the biometric information system of the present invention is characterized in that it is composed of

a bioelectric potential detector that includes a disposable bioelectrode pad for detecting bioelectric potentials, and a reusable signal processor for processing and wirelessly transmitting the bioelectric potential signals detected by the bioelectrode pad, wherein the bioelectrode pad and the signal processor are detachable, and the portion that transmits the bioelectric potentials from the bioelectrode pad to the signal processor has a waterproof structure, and a monitor that receives the bioelectric potential signals transmitted wirelessly from the signal processor of the bioelectric potential detector, determines whether the bioelectric potential signals are in an abnormal state, and if the bioelectric potential signals are in an abnormal state, wirelessly transmits alarm information notifying the user at a minimum that the bioelectric potential signals are in an abnormal state,

and a portable terminal that receives the alarm information transmitted by the monitor and triggers an alarm (Claim 6).

With this configuration,

the bioelectric potential detector is hygienic because the bioelectrode pad is disposable, the signal processor is economical because it is reusable, and the reusable signal processor and the disposable bioelectrode can be easily attached and detached before and after use and are waterproofed. The bioelectric potential signals are transmitted wirelessly from the bioelectric potential detector. The wirelessly transmitted bioelectric potential signals are received by the monitor to determine if it is in an abnormal state, and if the bioelectric potential signals are in an abnormal state, alarm information is transmitted wirelessly to the portable terminal. The portable terminal receives the alarm information and triggers an alarm.

[0013]

Alternatively, the biometric information system of the present invention is characterized in that it is composed of

a bioelectric potential detector that includes a disposable bioelectrode pad for detecting bioelectric potentials,

and a reusable signal processor for processing and wirelessly transmitting the bioelectric potential signals detected by the bioelectrode pad, wherein the bioelectrode pad and the signal processor are detachable, and the portion that transmits the bioelectric potentials from the bioelectrode pad to the signal processor has a waterproof structure,

and a receiver that receives the wirelessly transmitted bioelectric potential signals from the signal processor of the bioelectric potential detector, determines whether the bioelectric potential signals are in an abnormal state, and transmits the alarm information notifying the user at a minimum that the bioelectric potential signals are in an abnormal state if the bioelectric potential signals are in an abnormal state,
and a portable terminal that receives the alarm information transmitted by the receiver via a communication line and triggers the alarm (Claim 7).
With this configuration,
the bioelectric potential detector is hygienic because the bioelectrode pad is disposable, the signal processor is economical because it is reusable, and the reusable signal processor and the disposable bioelectrode can be easily attached and detached before and after use and are waterproofed. The bioelectric potential signals are wirelessly transmitted by the bioelectric potential detector. The receiver receives the wirelessly transmitted bioelectric potential signal, determines if the bioelectric signals are in an abnormal state, and transmits the alarm information via the communication line if the bioelectric potential signals are in an abnormal state. The portable terminal receives the alarm information and triggers an alarm.
[0014]
Alternatively, the biometric information system of the present invention is characterized in that it is composed of a bioelectric potential detector that includes a disposable bioelectrode pad for detecting bioelectric potentials,
and a reusable signal processor for processing the bioelectric potential signals detected by the bioelectrode pad, and determining whether the bioelectric potential signals are in an abnormal state and wirelessly transmitting alarm information notifying at a minimum that the bioelectric potential signals are in an abnormal state if the bioelectric potential signals are in an abnormal state, wherein the bioelectrode pad and the signal processor are detachable, and the portion that transmits the bioelectric potentials from the bioelectrode pad to the signal processor has a waterproof structure, and a portable terminal that receives the wirelessly transmitted alarm information from the signal processor of the bioelectric potential detector (Claim 8).
With this configuration,
the bioelectric potential detector is hygienic because the bioelectrode pad is disposable, the signal processor is economical because it is reusable, and the reusable signal processor and the disposable bioelectrode can be easily attached and detached before and after use and are waterproofed. The bioelectric potential detector determines whether the bioelectric potential signals are in an abnormal state and wirelessly transmits alarm information if they are in an abnormal state. The portable terminal receives the alarm information and triggers an alarm.
[0015]
Alternatively, the biometric system of the present invention is characterized in that it is composed of
a bioelectric potential detector that includes a disposable bioelectrode pad for detecting bioelectric potentials, and a reusable signal processor for processing and wirelessly transmitting the bioelectric potential signal detected by the bioelectrode pad, wherein the bioelectrode pad and the signal processor are detachable, and the portion that transmits the bioelectric potentials from the bioelectrode pad to the signal processor has a waterproof structure, and a portable terminal receives the wirelessly transmitted alarm information from the signal processor of the bioelectric potential detector,

and displays the bioelectric potential signal (Claim 9).
With this configuration,
the bioelectric potential detector is hygienic because the bioelectrode pad is disposable, the signal processor is economical because it is reusable, and the reusable signal processor and the disposable bioelectrode can be easily attached and detached before and after use and are waterproofed. The bioelectric potential signals are transmitted wirelessly from the bioelectric potential detector and received by the portable terminal. The portable terminal then displays the bioelectric potential signal.
[0016]
[Embodiments of the Invention]
Embodiments of the present invention will be described with reference to Figure 1, which is an exploded view of a bioelectric detector, and Figure 2, which shows an assembled bioelectric potential detector and the method for mounting same.
The bioelectric potential detector 11 is composed of a disposable bioelectrode pad 7 and a reusable signal processor 10. The bioelectrode pad is hygienic because it is disposable, and the signal processor is economical because it is reusable. The bioelectrode pad 7 and the signal processor 10 are detachable with hooks, as described below. Therefore, the reusable signal processor and the disposable bioelectrode can be easily attached and detached before and after use. The release sheet 8 is a sheet that is peeled off when the bioelectric potential detector 11 is attached to the subject.
The bioelectrode pad 7 is composed of a first sheet 1, a conductive material 2, a hook 3, a second sheet 4, a conductive gel 5, a third sheet 6, and double-sided adhesive tape 9.
[0017]
The first sheet 1 is an approximately rectangular sheet with notches approximately 1/3 of the way from the middle on both the left and right sides. The first sheet 1 should be made of an insulating material that does not allow moisture to penetrate, for example, polyethylene foam, polyurethane foam, or polyurethane sheet is preferred. At the center of the first sheet 1, there are two holes 1a through which the protruding portions of the hooks 3 are inserted. Furthermore, an adhesive or glue, such as an acrylic adhesive for example, is applied to the back surface of the first sheet 1. The shape of the first sheet 1 need not be limited to an approximately rectangular shape.
[0018]
The second sheet 4 has the same external shape as the first sheet 1 and is provided with two openings 4a on the left and right sides into which the conductive gel 5 is inserted. The second sheet 4 should be made of insulating material that does not allow moisture to penetrate, and like the first sheet 1, polyethylene foam, polyurethane foam, or polyurethane sheet is preferred. The adhesive or glue, such as acrylic adhesive for example, is applied to the surface of the second sheet 4. The adhesive, such as acrylic adhesive for example, is applied to the back surface of the second sheet 4.
The conductive gel 5 is produced from components such as an acrylic hydrophilic polymer, glycerin, and water.
[0019]
Between the first sheet 1 and the second sheet 4, two pieces of conductive material 2 and two hooks 3 are arranged to transmit the bioelectric potentials detected by the conductive gel 5, which is placed in the openings 4a of the second sheet 4. The pieces of conductive material 2 are rod-shaped, one end of which

has two holes 2a for contacting the conductive gel 5 and the other end of which has two holes 2a through which the protruding portions of the hook 3 are inserted. The two hooks 3 are arranged so that the protruding portions of the hook 3 can be inserted through the holes 2a and 1a from the back side of the conductive material 2.

With this configuration, the bioelectric potentials detected by the conductive gel 5 are transmitted through the conductive material 2 and the hooks 3.

[0020]

The conductive material 2 can be a carbon sheet or a PET sheet coated with conductive Ag/AgCl. The carbon sheet allows X-rays to pass through, so that no shadows are cast during CT scanning.

[0021]

The hook 3 may be a type of a hook that clamps the conductive material 2 from both sides, as shown in Figure 8. The hook 3 may also be made of a stainless-steel stud, carbon stud, or Ag/AgCl.

[0022]

If necessary, the third sheet 6, made, for example, of polyethylene or the like, may be provided to cover the center of the back surface of the second sheet 4. This makes it easier to use the bioelectrode pad 7 in terms of attaching it to and detaching it from the biometric surface by making the center of the back surface of the second sheet 4 less adhesive to the living body.

[0023]

The bioelectrode pad 7 is provided with a double-sided adhesive tape 9 with, for example, acrylic adhesive coated on both sides of the nonwoven fabric at the center of the surface of the first sheet 1. The adhesive tape 9 has two holes 9a for inserting the protruding portion of the hook 3 that transmits the bioelectric potential emanating from the center of the surface of the bioelectrode pad 7. The adhesive tape 9 is insulating.

[0024]

As shown in Figure 2, the bioelectrode pad 7 has adhesive tape 9 attached to the center of the surface so that the hook 3 that transmits bioelectrical potentials can be inserted through a hole 9a. In addition, the release tape 8 is attached to the back surface of the bioelectrode pad 7. Also, a release sheet 9b should be attached to the surface of the adhesive tape 9.

When attaching the bioelectric potential detector to a patient, the release sheet 9b is peeled off from the adhesive tape 9, the protruding portion of the hooks 3 protruding from the adhesive tape 9 is inserted into a hook engagement portion 10a on the bottom surface of the signal processor 10, the release tape 8 is peeled off from the bioelectrode pad 7 and the detector is attached to the subject. The bioelectric potential detector 11 can be used as an electrocardiogram detector that is worn on the subject's chest to detect electrocardiogram signals.

[0025]

The signal processor 10 incorporates a processing circuit for filtering and amplifying detected bioelectric potential signals, a memory for storing the processed bioelectric potential signal, a circuit for modulating the processed bioelectric potential signal and transmitting it wirelessly, and a loop antenna. Furthermore, the housing of the signal processor 10 is waterproof.

[0026]
The adhesive tape 9 should be thick enough to waterproof the area around the engagement portion of the protruding portion of the hook 3 and the hook engagement portion 10a of the signal processor 10.
[0027]
By using the structure described above, the housing of the signal processor 10, the part of the bioelectrode pad 7 that transmits the bioelectric potentials from the bioelectrode pad 7 to the signal processor 10, and the engagement portion between the protruding part of the hook 3 and the hook engagement portion 10a are waterproofed, thus the entire bioelectric potential detector 11 is waterproofed.
As a result, even if the subject takes a shower or bath while wearing the bioelectric potential detector 11, water will not affect the detection of bioelectric potentials.
[0028]
To waterproof the engagement portion of the protruding portion of the hook 3 and the hook engagement portion 10a, the adhesive tape 9 should be attached at a minimum around the engagement portion. Thus, for example, as shown in Figure 3, the circle-shaped adhesive tape 9 may be provided on each of the two engagement portions.
[0029]
Next, another structure for waterproofing the engagement portions of the protruding portion of the hook 3 and the hook engagement portion 10a is shown in Figure 4.
As shown in Figure 4(a), a circular protrusion 10b is provided around the hook engagement portion 10a to cover it. The circular protrusion 10b may be provided as part of the housing 10c. An enlarged cross-sectional view of the bioelectrode pad 7 in the state of being fitted onto the hook 3 is shown in Figure 4(b). As shown, the circular protrusion 10b contacts and sinks into the first sheet 1 of the bioelectrode pad 7 so as to cover the periphery of the engagement portion of the protruding portion between the hook 3 and the hook engagement portion 10a, so that the engagement portion between the protruding portion of the hook 3 and the hook engagement portion 10a is waterproofed.
[0030]
Next, another structure for waterproofing the engagement portions between the protruding portion of the hook 3 and the hook engagement portion 10a is shown in Figure 5.
As shown in Figure 5(a), a suction cup 10d is provided around the hook engagement portion 10a. An enlarged cross-sectional view of the bioelectrode pad 7 in the state of being fitted to the hook 3 is shown in Figure 5(b). The suction cup 10d is structured in such a way that the engagement portion between the protruding portion of hook 3 and the hook engagement portion 10a is covered by the suction cup, so that the engagement portion between the protruding portion of the hook 3 and the hook engagement portion 10a is waterproofed.
[0031]
Next, an example of the use of this waterproofed bioelectric potential detector 11 is shown.
Figure 6 shows an example of use at a hospital.
The subject (patient) wears the bioelectric potential detector 11 on his/her chest at all times to detect electrocardiogram signals. The detected electrocardiogram signals are processed by a circuit built into the signal processor 10 and transmitted wirelessly to a portable monitor 22 for each subject (patient).

The portable monitor 22 receives the wirelessly transmitted electrocardiogram signal by means of a receiver 22a, demodulates it, and displays the electrocardiogram waveform on a display 22b. Furthermore, the portable monitor 22 modulates and wirelessly transmits the electrocardiogram signal from an antenna 22c to a central monitor 23.

The central monitor 23 receives the electrocardiogram signals of multiple subjects (patients) by means of the receiver 23a and displays them on the display 23b. In addition, the electrocardiogram signals are transmitted to a switchboard 24, which can also transmit them to another system via telephone network. In addition, the electrocardiogram signal or information about the electrocardiogram signal is transmitted wirelessly to a portable terminal 26 carried by doctors, nurses, and other medical staff via an exchanger 24 and a wireless transmitter 25.

[0032]

In the signal processor 10 of the bioelectric potential detector 11, the portable monitor 22, or the central monitor 23, it is determined whether or not the detected electrocardiogram of the subject (patient) is in an abnormal state, such as an arrhythmia or an abnormal heart rate measured from the electrocardiogram, and if an abnormal state occurs, the portable monitor 22 and the central monitor 23 are set to trigger an alarm. In addition, alarm information reporting that the electrocardiogram is abnormal is sent to the portable terminal 26 carried by the medical staff via the switching device 24 and the wireless transmitter 25. The portable terminal 26 triggers the alarm based on the received alarm information. The electrocardiogram signals may be transmitted from the central monitor 23 to the portable terminal 26 via the exchanger 24 and the wireless transmitter 25. An electrocardiogram waveform may then be displayed on the display of the portable terminal 26.

[0033]

In this way, the subject (patient) can take a shower or bath 21 while wearing the waterproof bioelectric potential detector 11. Furthermore, even if the electrocardiogram shows an abnormality after showering or bathing, when sudden changes in body temperature are likely to occur, the portable monitor 22, central monitor 23, or portable terminal 26 triggers the alarm, allowing the medical staff to immediately recognize that the electrocardiogram is abnormal and take prompt action.

[0034]

The transmission of the alarm information to the portable terminal 26 is not limited to the wireless transmitter 25 but may also be directly transmitted from the signal processor 10 of the bioelectric potential detector 11, the portable monitor 22, or the central monitor 23.

[0035]

The detected electrocardiogram signals may be continuously stored in the memory built into the signal processor 10 of the bioelectric potential detector 11 to serve as a Holter monitor.

[0036]

Next, another example of the use of the bioelectric potential detector 11 is shown.

Figure 7 shows an example of use at home.

The subject at home wears the bioelectric potential detector 11 on his/her chest at all times to detect electrocardiogram signals. The detected electrocardiogram signals are processed by circuitry built into the signal processor 10 and transmitted wirelessly to the receiver 31 for home use.

The electrocardiogram signals received by the receiver 31 are transmitted via a communication line 32 to a portable terminal 33 carried by family members or medical staff.

[0037]

The signal processor 10 or the receiver 31 of the bioelectric potential detector 11 determines whether the detected electrocardiogram of the subject (patient) is abnormal, such as an arrhythmia or an abnormal heart rate, and if so, the alarm information is sent to the portable terminal 33. The portable terminal 33 triggers the alarm based on the received alarm information. The electrocardiogram signals may be transmitted to the portable terminal 33 via the receiver 31 and the communication line 32. The electrocardiogram waveform may then be displayed on the display of the portable terminal 33.

[0038]

In this way, the subject can take a shower or a bath 21 while wearing the waterproof bioelectric potential detector 11. Furthermore, even if the electrocardiogram shows an abnormality after a shower or bath, when sudden changes in body temperature are likely to occur, the portable terminal 33 will issue the alarm, allowing the medical staff to immediately recognize that the electrocardiogram is abnormal and take prompt action.

[0039]

The alarm information may be sent to the portable terminal 33 directly from the signal processor 10 of the bioelectric potential detector 11, without using the communication line 32. The portable terminal may be a cellular phone, PHS, PDA, dedicated terminal, or similar.

[0040]

When the bioelectric potential detector 11 is used at home, the detected electrocardiogram signals may also be continuously stored in the memory built into the signal processor 10 of the bioelectric potential detector 11 to serve as a Holter monitor.

[0041]

[Effects of the Invention]

As described in detail above, the bioelectrode pad is hygienic because it is disposable, and the signal processor is economical because it is reusable. In addition, the reusable signal processor and the disposable bioelectrodes can be easily attached and detached before and after use. The portion that transmits the bioelectric potential from the bioelectrode pad to the signal processor is waterproof, so it is possible for the subject (patient) to take a shower or bath while measuring the bioelectric potential.

Furthermore, the biometric information system wirelessly transmits the bioelectric potential detected by the bioelectric potential detector to inform medical staff or family members of the bioelectric potential information, so that they can quickly treat and cope with a sudden change in condition during or after a shower or bath.

[BRIEF DESCRIPTION OF THE DRAWINGS]

[Figure 1] shows an exploded perspective view of a bioelectric potential detector.

[Figure 2] shows a diagram illustrating an assembled bioelectric potential detector and the method for attaching same.

[Figure 3] shows a perspective view of another bioelectric potential detector of the present invention.

[Figure 4] shows a diagram of another bioelectric potential detector of the present invention, where Figure 4(a) is an enlarged cross-sectional view of the back side of a signal processor, and Figure 4(b) is that

of the state in which a hook engagement portion of a signal processor is fitted with the hook of a bioelectrode pad.

[Figure 5] shows a diagram of another bioelectric potential detector of the present invention, where Figure 5(a) is an enlarged cross-sectional view of the back side of a signal processor, and Figure 5(b) is that of the state in which a hook engagement portion of a signal processor is fitted with the hook of a bioelectrode pad.

[Figure 6] shows a diagram illustrating an example of use of a bioelectric potential detector at a hospital.

[Figure 7] shows a diagram illustrating an example of use of a bioelectric potential detector at home.

[Figure 8] shows a diagram illustrating another example of a bioelectrode pad hook in a bioelectric potential detector.

[Description of the Reference Numerals]

1 First sheet
2 Conductive material
3 Hook
4 Second sheet
5 Conductive gel
6 Third sheet
7 Disposable bioelectrode pad
8 Release sheet
9 Double-sided adhesive tape
9a Release sheet
10 Signal processor
10a Hook engagement portion
10b Circular protrusion
10c Housing
10d Suction cup
11 Bioelectric potential detector
21 Bath
22 Portable monitor
22a Receiver
22b Display
22c Antenna
23 Central monitor
23a Receiver
23b Display
24 Exchanger
25 Wireless transmitter
26 Portable terminal
31 Receiver
32 Communication line
33 Portable terminal

[FIGURE 1]

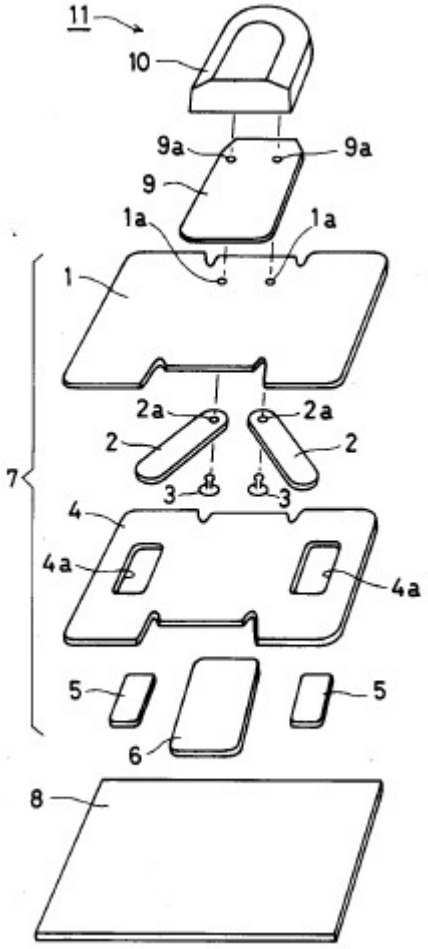

[FIGURE 2]

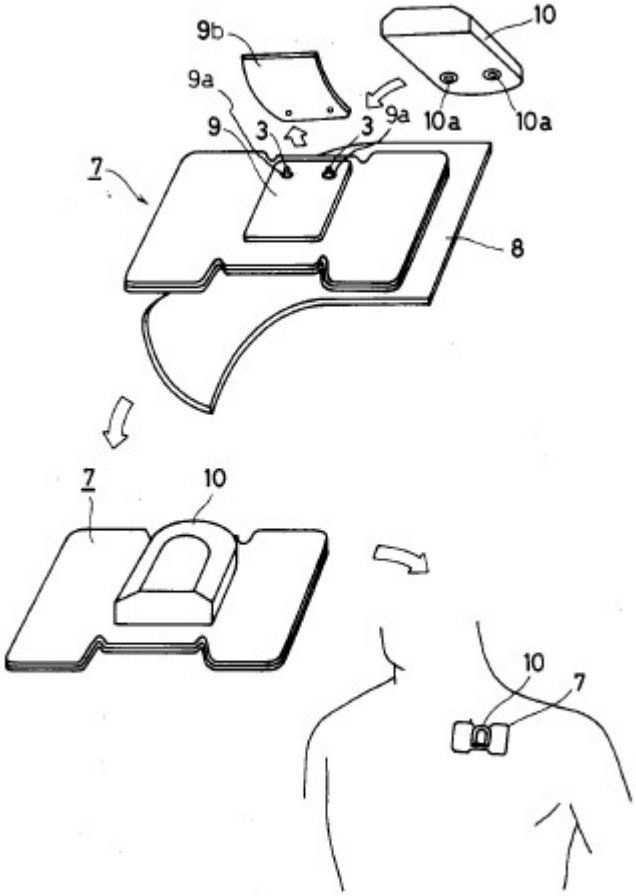

[FIGURE 3]

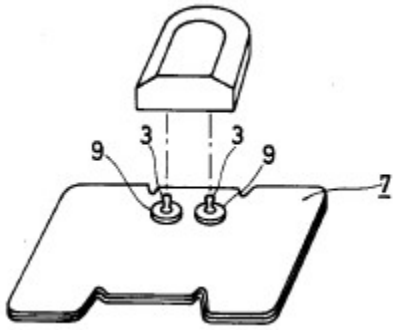

[FIGURE 4]

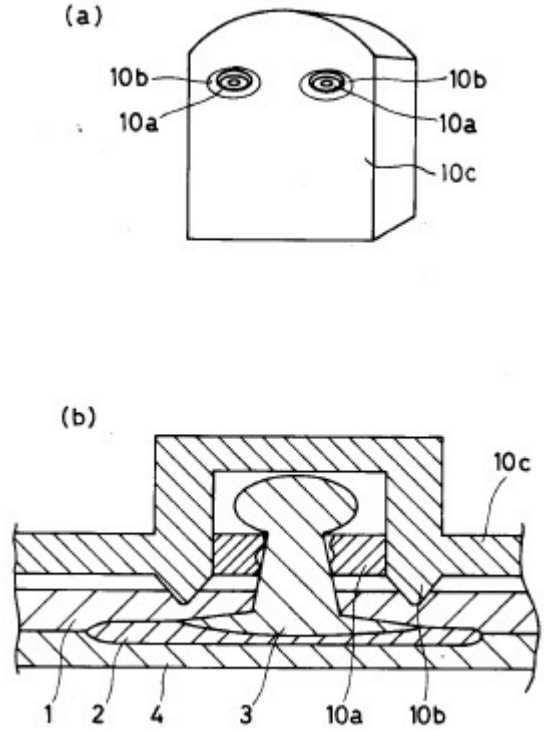

[FIGURE 5]

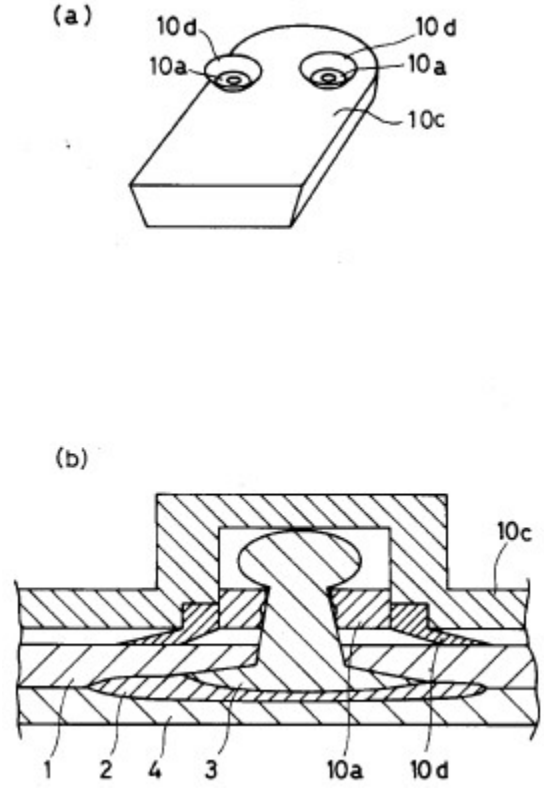

[FIGURE 6]

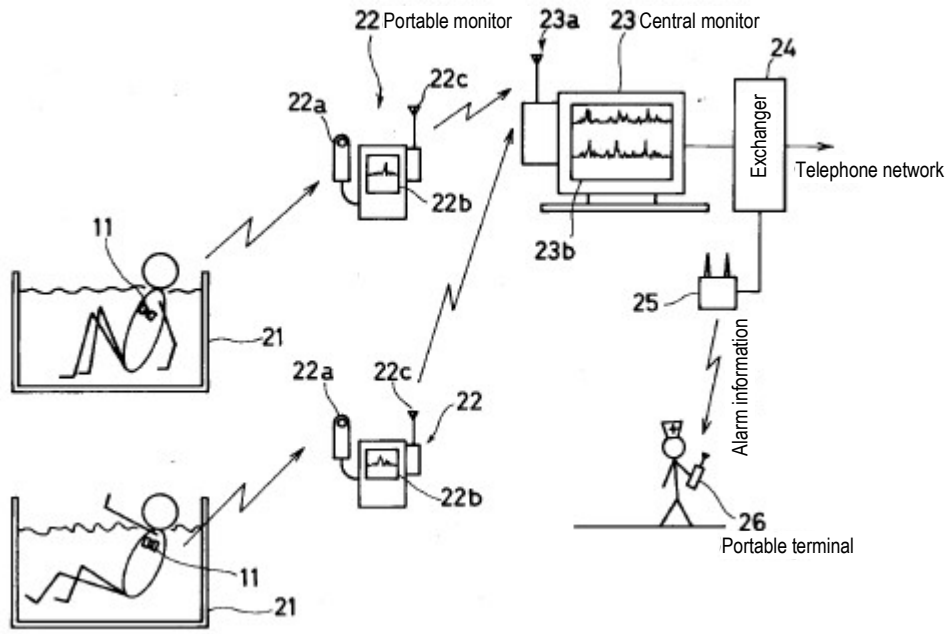

[FIGURE 7]

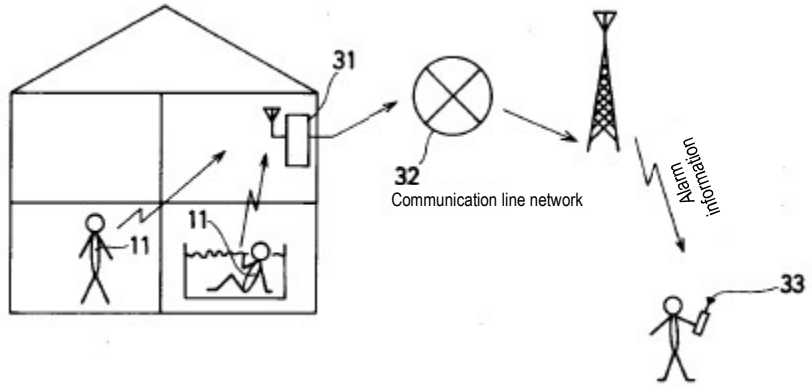
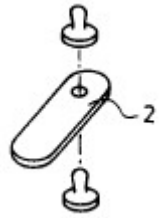
[FIGURE 8]