US006223080B1

(12) **United States Patent**
Thompson

(10) **Patent No.: US 6,223,080 B1**
(45) **Date of Patent: Apr. 24, 2001**

(54) **POWER CONSUMPTION REDUCTION IN MEDICAL DEVICES EMPLOYING MULTIPLE DIGITAL SIGNAL PROCESSORS AND DIFFERENT SUPPLY VOLTAGES**

(75) Inventor: **David L. Thompson**, Fridley, MN (US)

(73) Assignee: **Medtronic, Inc.**, Minneapolis, MN (US)

(*) Notice: Subject to any disclaimer, the term of this patent is extended or adjusted under 35 U.S.C. 154(b) by 0 days.

(21) Appl. No.: **09/181,523**

(22) Filed: **Oct. 28, 1998**

Related U.S. Application Data

(63) Continuation-in-part of application No. 09/067,881, filed on Apr. 29, 1998, now abandoned.

(51) **Int. Cl.**[7] **A61N 1/362**
(52) **U.S. Cl.** **607/16**
(58) **Field of Search** 607/1, 2, 4, 5, 607/9, 16

(56) **References Cited**

U.S. PATENT DOCUMENTS

4,031,899	6/1977	Renirie .
4,460,835	7/1984	Masuoka .
4,561,442	12/1985	Vollmann et al. .
4,791,318	12/1988	Lewis et al. .
5,022,395	6/1991	Russie .

(List continued on next page.)

OTHER PUBLICATIONS

Jan Mulder et al., "*Application of the Back Gate in MOS Weak Inversion Translinear Circuits*," IEEE Transactions on Circuits and Systems—I: Fundamental Theory and Applications, vol. 42, No. 11, Nov. 1995.

P–7739, Application of: Werner Peter Wohlgemuth, Ser. No. 09/158,566, Filing Date, Sep. 22,1998, "*Cardiac Pacing System with Improved Physiological Event Classification Based on DSP*".

Primary Examiner—George R. Evanisko
(74) *Attorney, Agent, or Firm*—Thomas F. Woods; Harold R. Patton; Girma Wolde-Michael

(57) **ABSTRACT**

Power consumption in medical and battery powered devices is reduced through the use and operation of multiple digital signal processing systems and through the application of different supply voltages to analog and digital circuits, respectively. Each processor of the multiple systems performs at least one particular function in a predetermined time period. The multiple digital signal processors of such systems can be operated at lower clock frequencies relative to those that would be required by one of such processors to complete the multiple functions within the predetermined time period. With reduced clock frequency, power consumption is reduced. Further, with reduced clock speed, supply voltages applied to such digital signal processors may also be reduced. A source applies a first fixed supply voltage to the digital circuits of the medical or battery powered device and a voltage generation circuit (e.g., a charge pump circuit) having the first fixed supply voltage applied thereto is used for generating a second fixed supply voltage to be applied to analog circuits of the device. Power consumption may also be reduced through the operation of circuits at clock speeds of lower levels to adequately complete desired functions during predetermined time periods (e.g., blanking interval, upper rate interval, etc.) just-in-time prior to subsequent required functional processes; by providing supply voltages tailored for various circuits of an integrated circuit; by operating two or more circuits of an integrated circuit at different clock frequencies; by changing the supply voltage level "on the fly" as required by specific circuit timing functions required for various circuitry based on clock frequencies used to control operation of such circuitry; and/or by tailoring back gate bias or adjusting back gate bias "on the fly" for circuits based on the supply voltage level applied to the circuits.

42 Claims, 14 Drawing Sheets

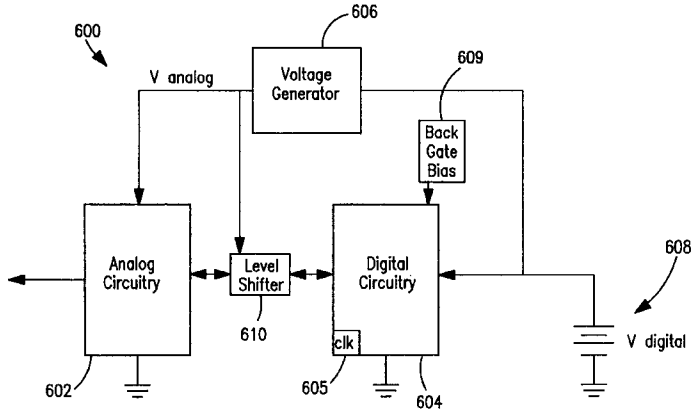

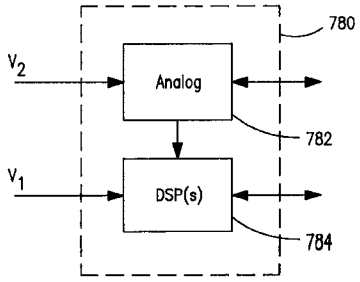

U.S. PATENT DOCUMENTS

5,154,170 10/1992 Bennett et al. .
5,185,535 2/1993 Farb et al. .
5,388,578 2/1995 Yomtov et al. .
5,464,435 * 11/1995 Neumann 607/9
5,610,083 3/1997 Chan et al. .

* cited by examiner

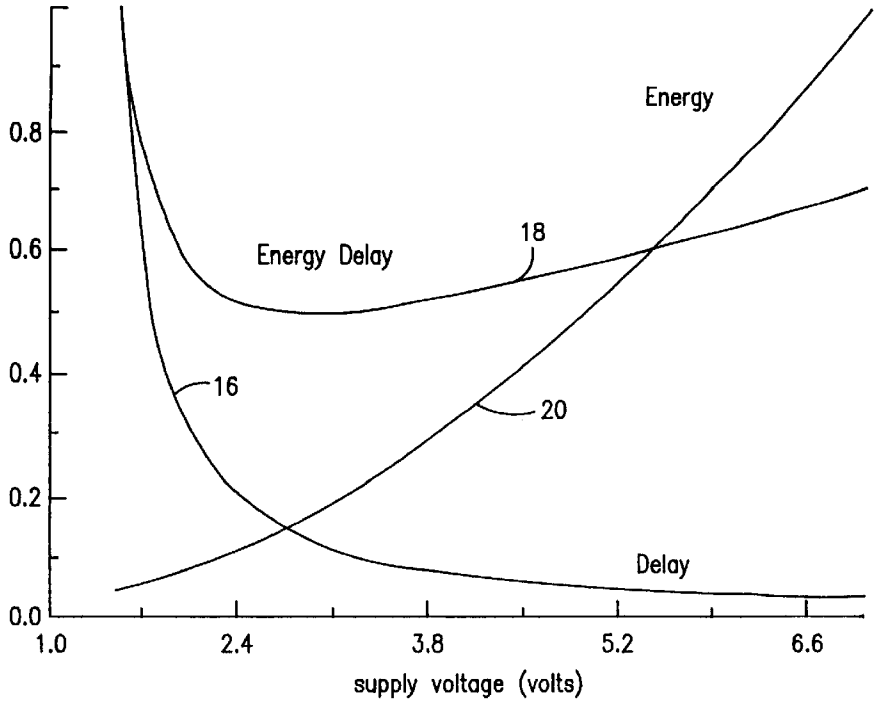
Energy
Energy Delay
18
16
20
Delay
0.8
0.6
0.4
0.2
0.0
1.0
2.4
3.8
5.2
6.6
supply voltage (volts)

FIG. 1

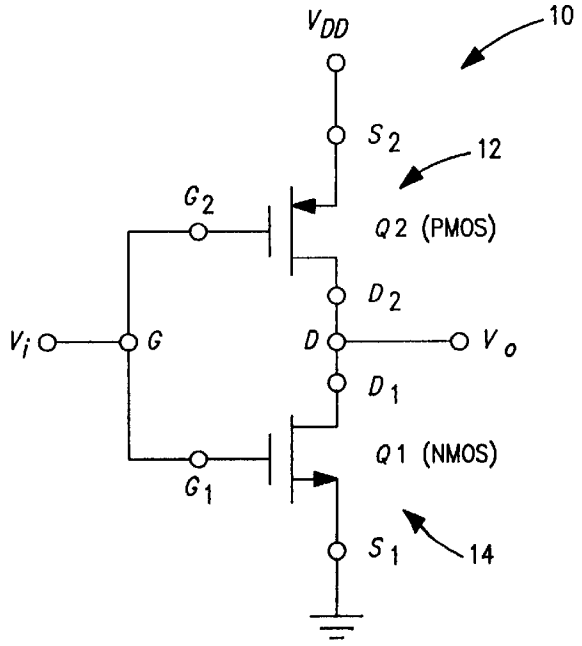
V_{DD}
10
S_2
12
G_2
Q2 (PMOS)
D_2
V_i
G
D
V_o
D_1
Q1 (NMOS)
G_1
S_1
14

FIG. 2

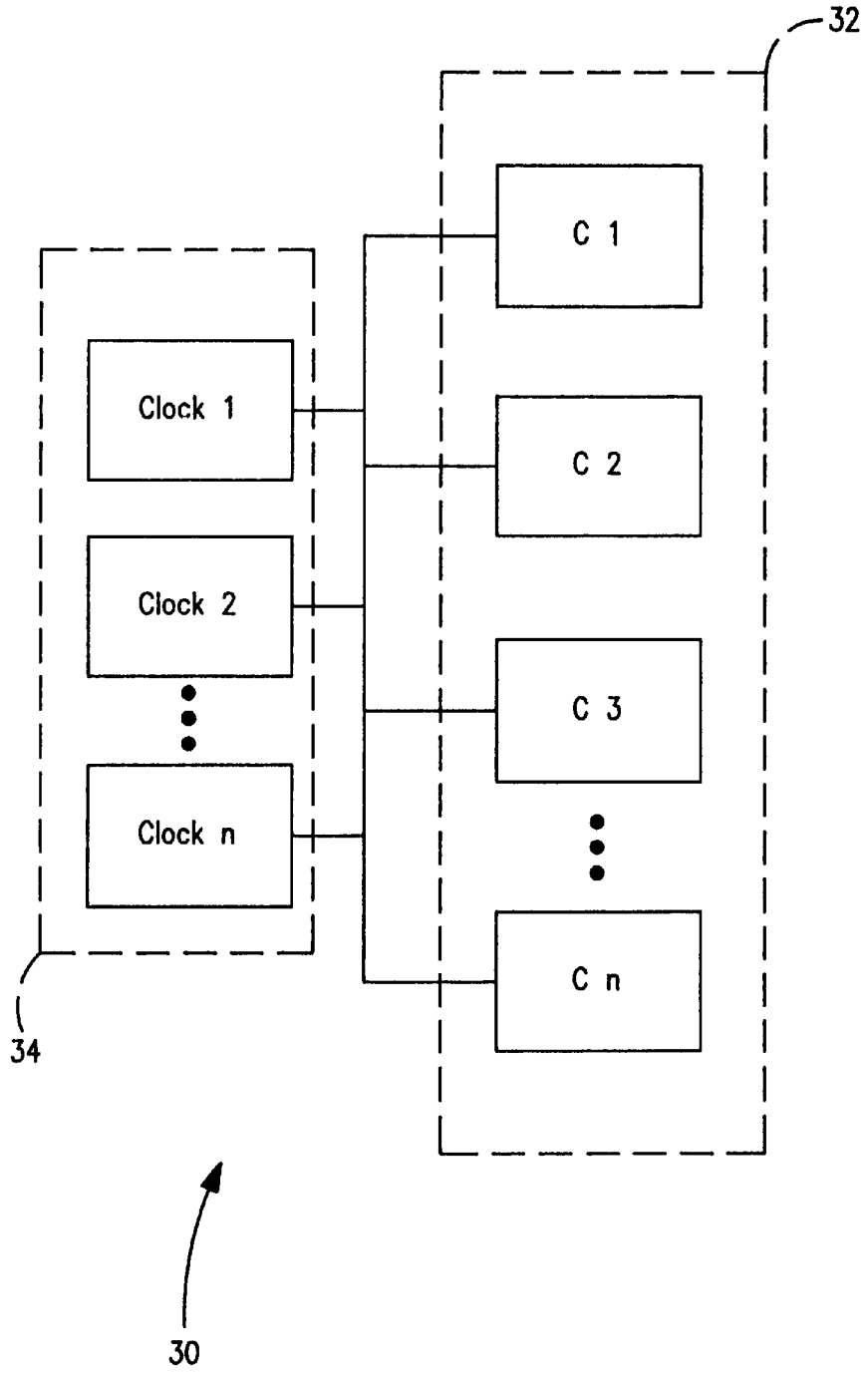

FIG. 3

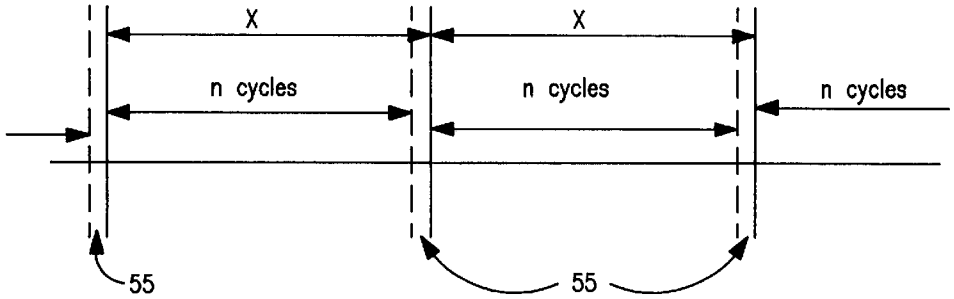

FIG. 4A

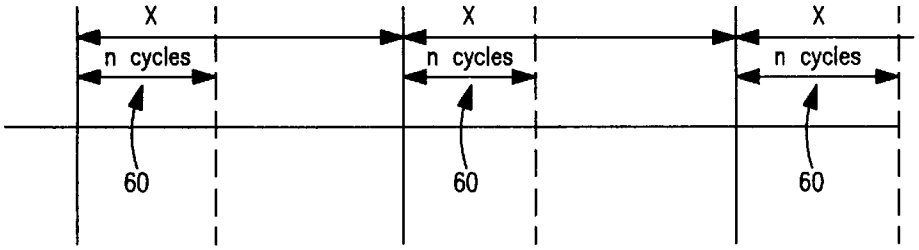

FIG. 4B

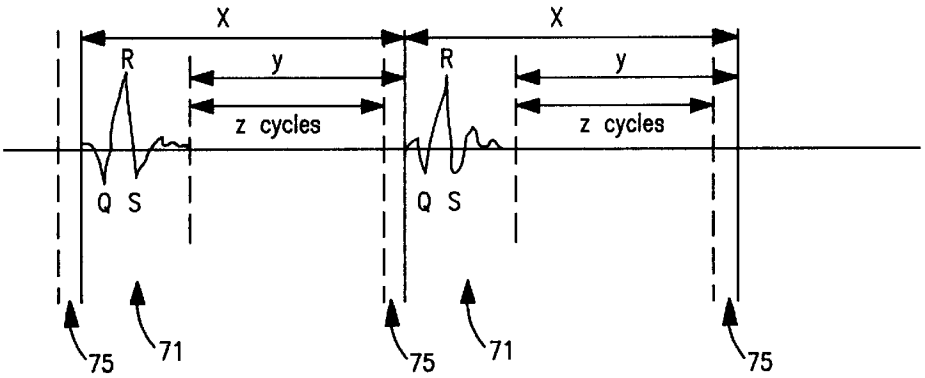

FIG. 4C

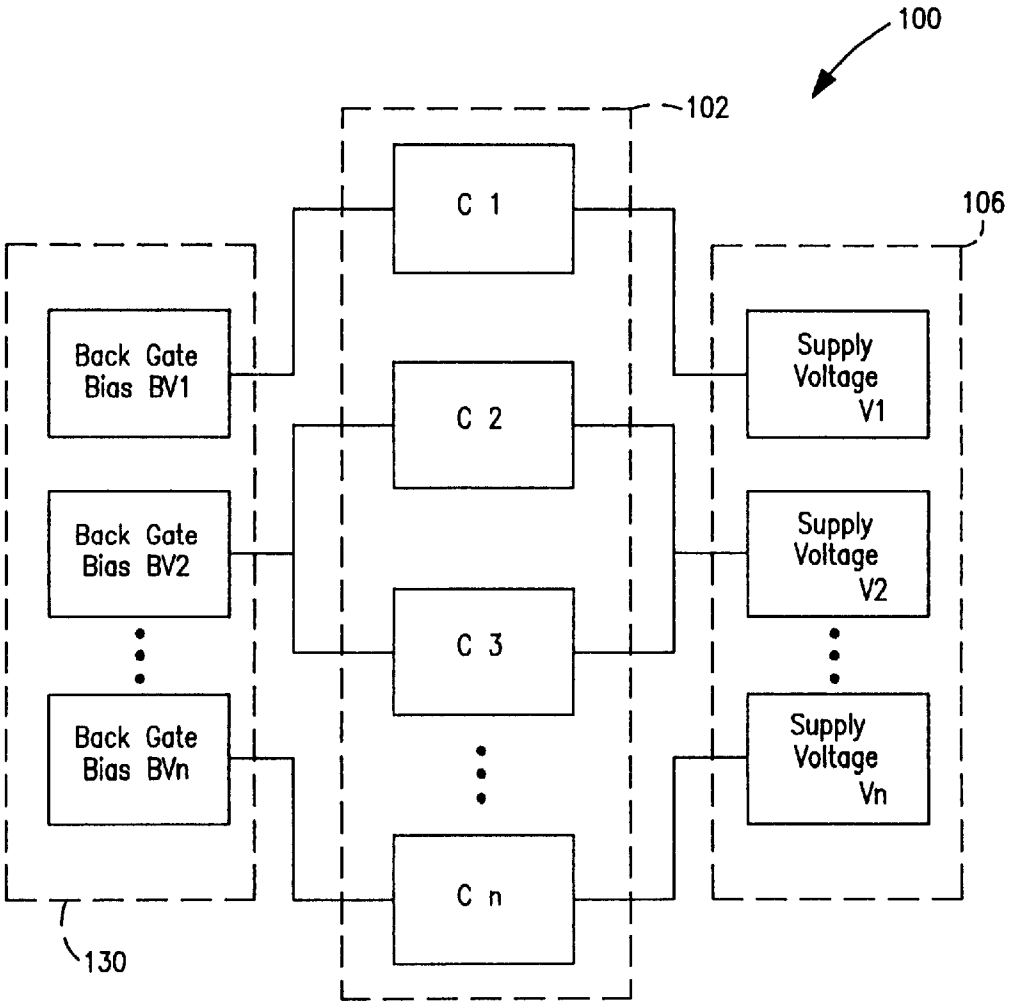
100
102
106
C 1
C 2
C 3
C n
Back Gate Bias BV1
Back Gate Bias BV2
Back Gate Bias BVn
Supply Voltage V1
Supply Voltage V2
Supply Voltage Vn
130

FIG. 5

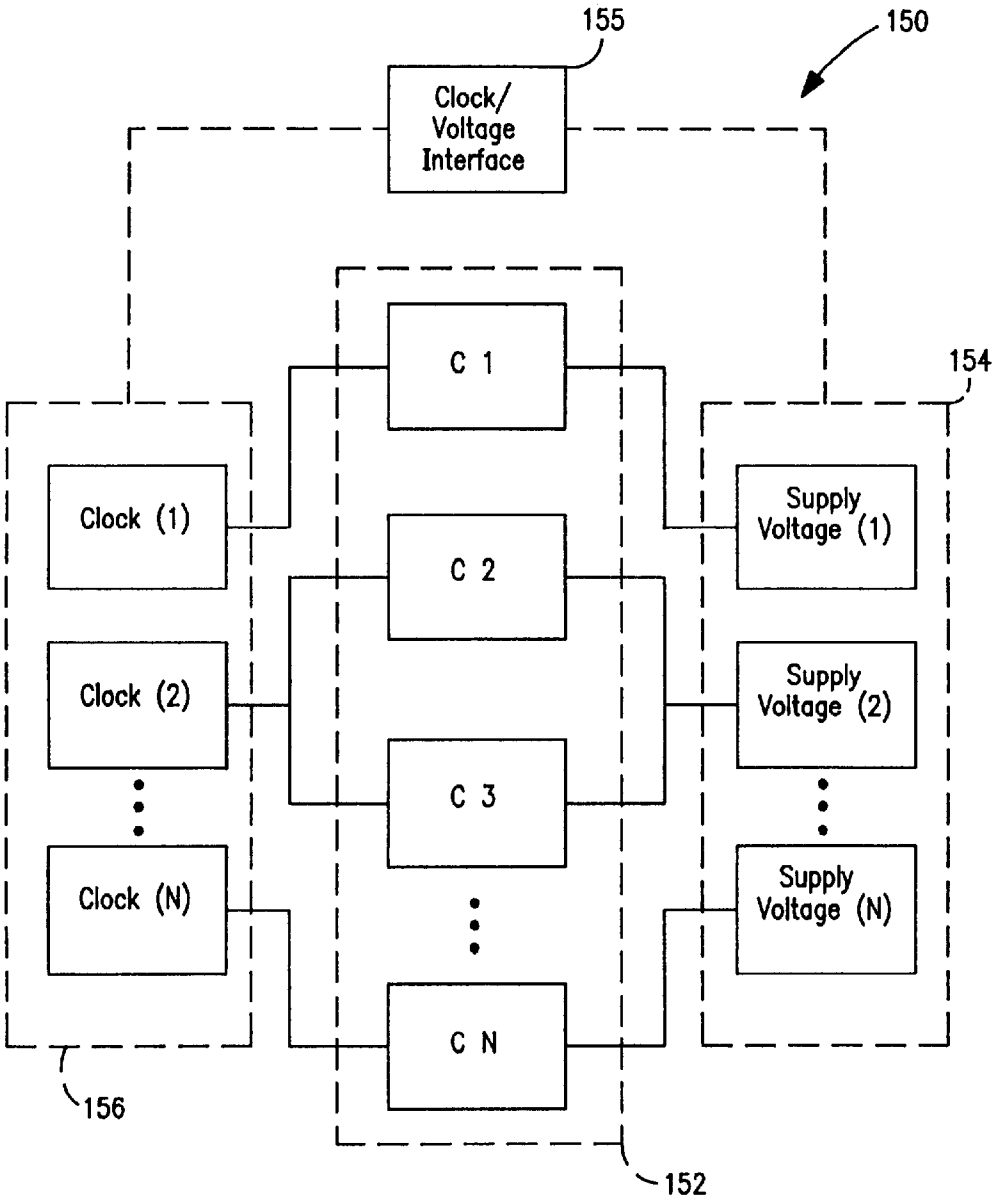
155
150
Clock/
Voltage
Interface
154
C 1
C 2
C 3
C N
Clock (1)
Clock (2)
Clock (N)
Supply
Voltage (1)
Supply
Voltage (2)
Supply
Voltage (N)
156
152

FIG. 6

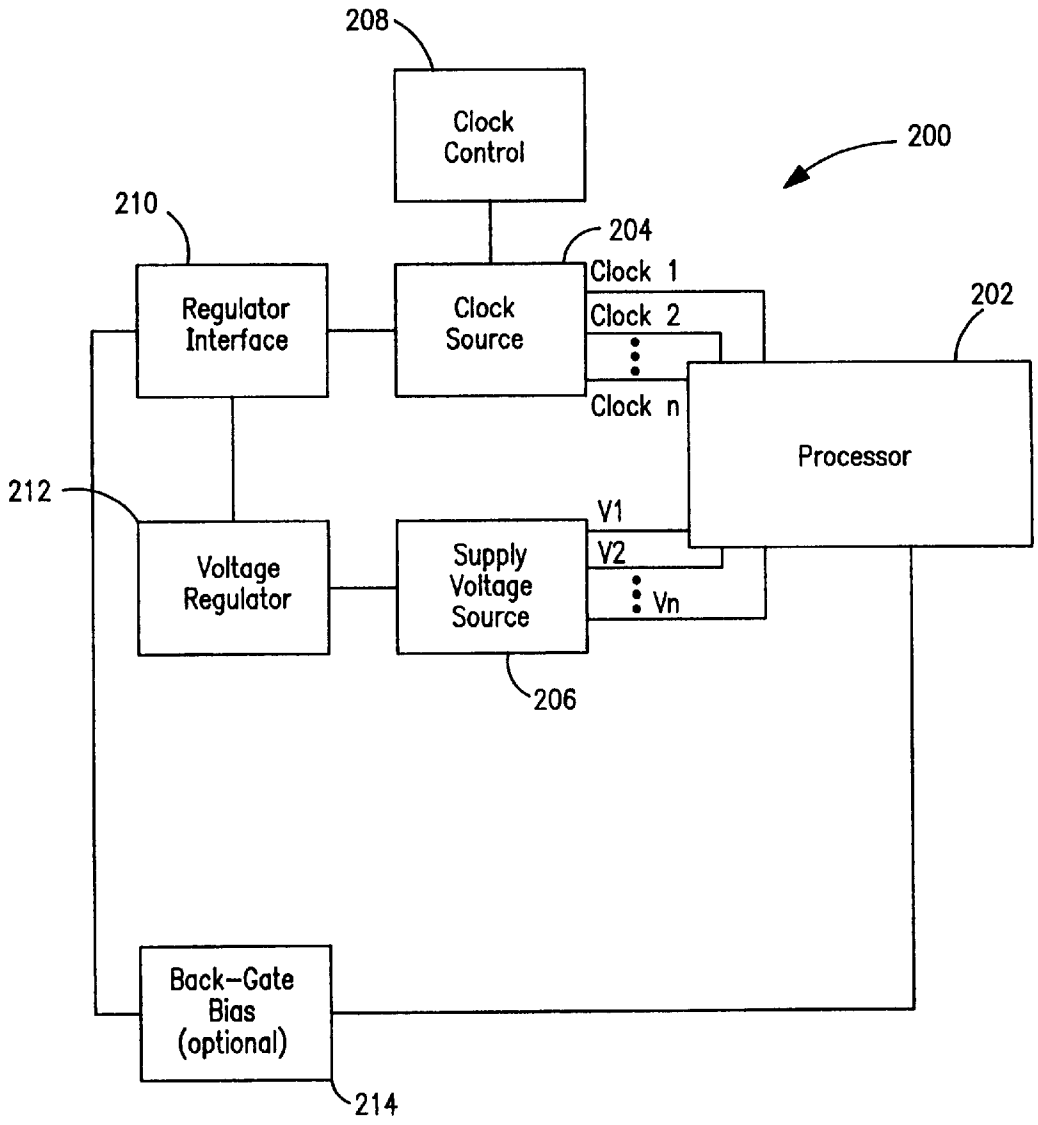
208
Clock Control
200
210
204
Clock 1
Regulator Interface
Clock Source
Clock 2
202
Clock n
Processor
212
V1
Voltage Regulator
Supply Voltage Source
V2
Vn
206
Back-Gate Bias (optional)
214

FIG. 7

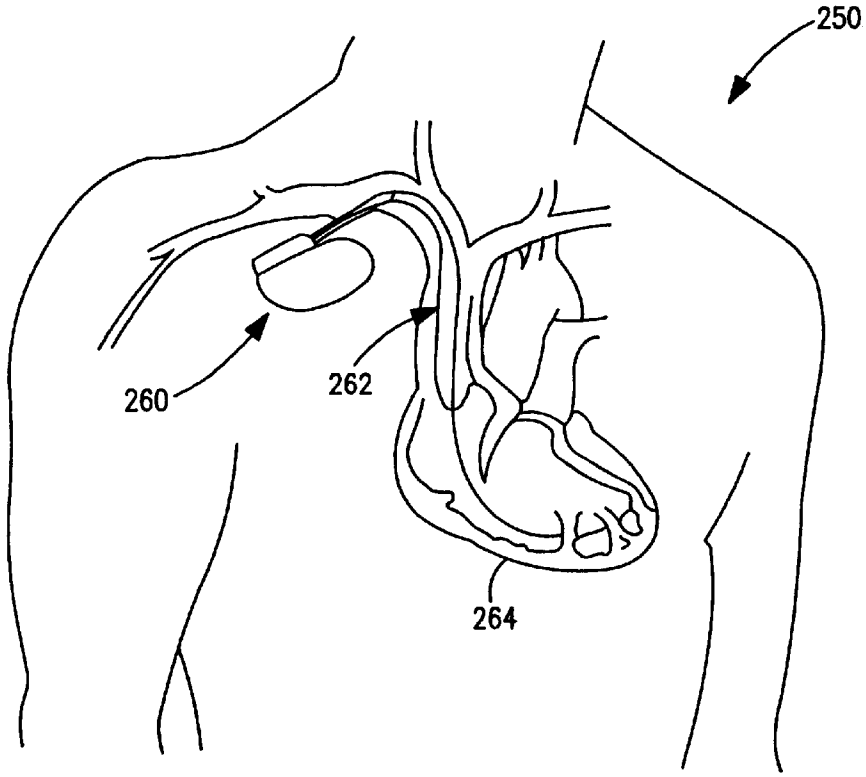

FIG. 8

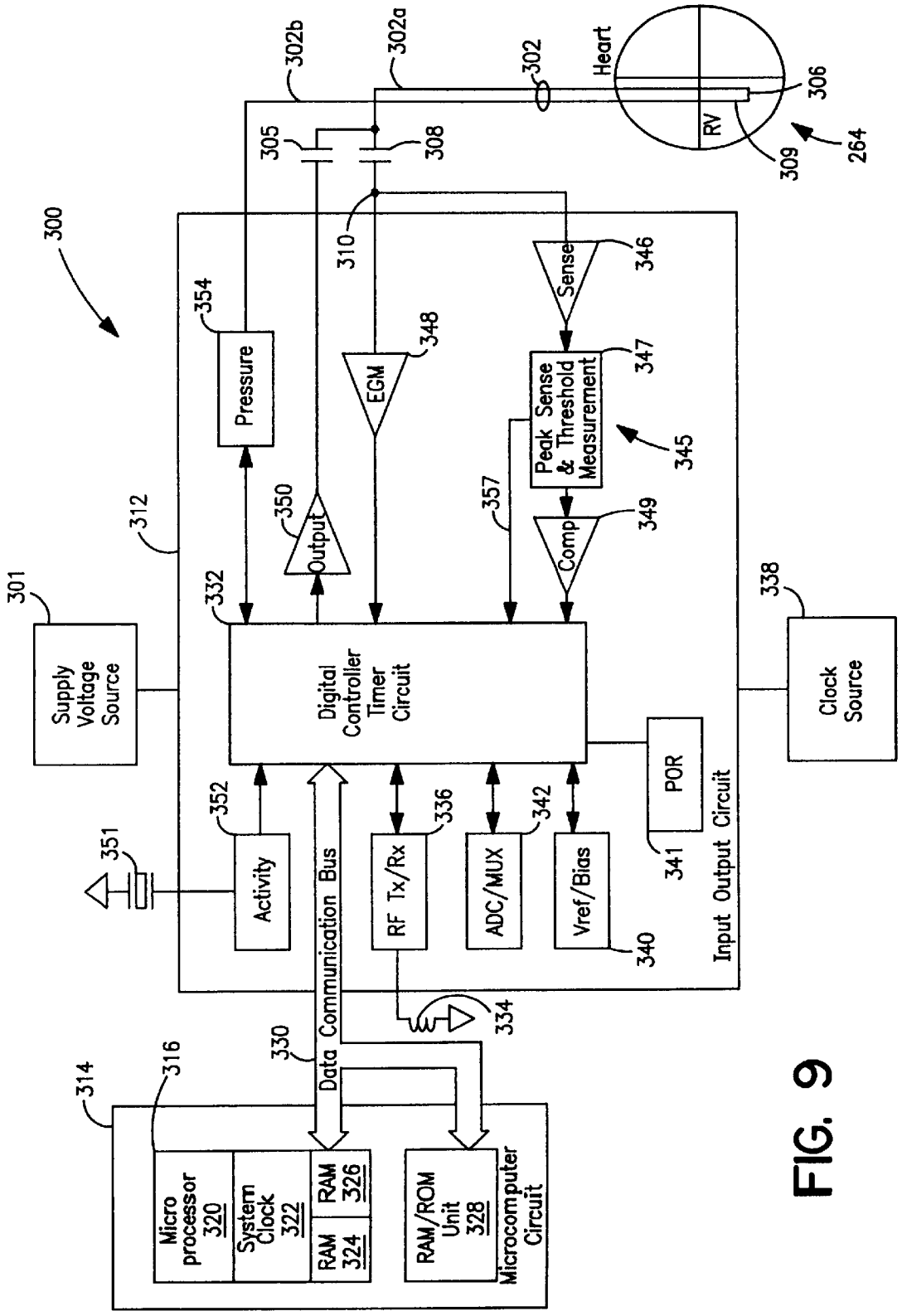
300
301
Supply Voltage Source
302b
302a
302
Heart
306
RV
309
264
305
308
310
312
354
Pressure
350
Output
348
EGM
346
Sense
347
Peak Sense & Threshold Measurement
345
357
349
Comp
332
Digital Controller Timer Circuit
338
Clock Source
352
Activity
351
336
RF Tx/Rx
342
ADC/MUX
340
Vref/Bias
341
POR
Input Output Circuit
334
330
Data Communication Bus
314
316
Micro processor 320
System Clock 322
RAM 324
RAM 326
RAM/ROM Unit 328
Microcomputer Circuit

FIG. 9

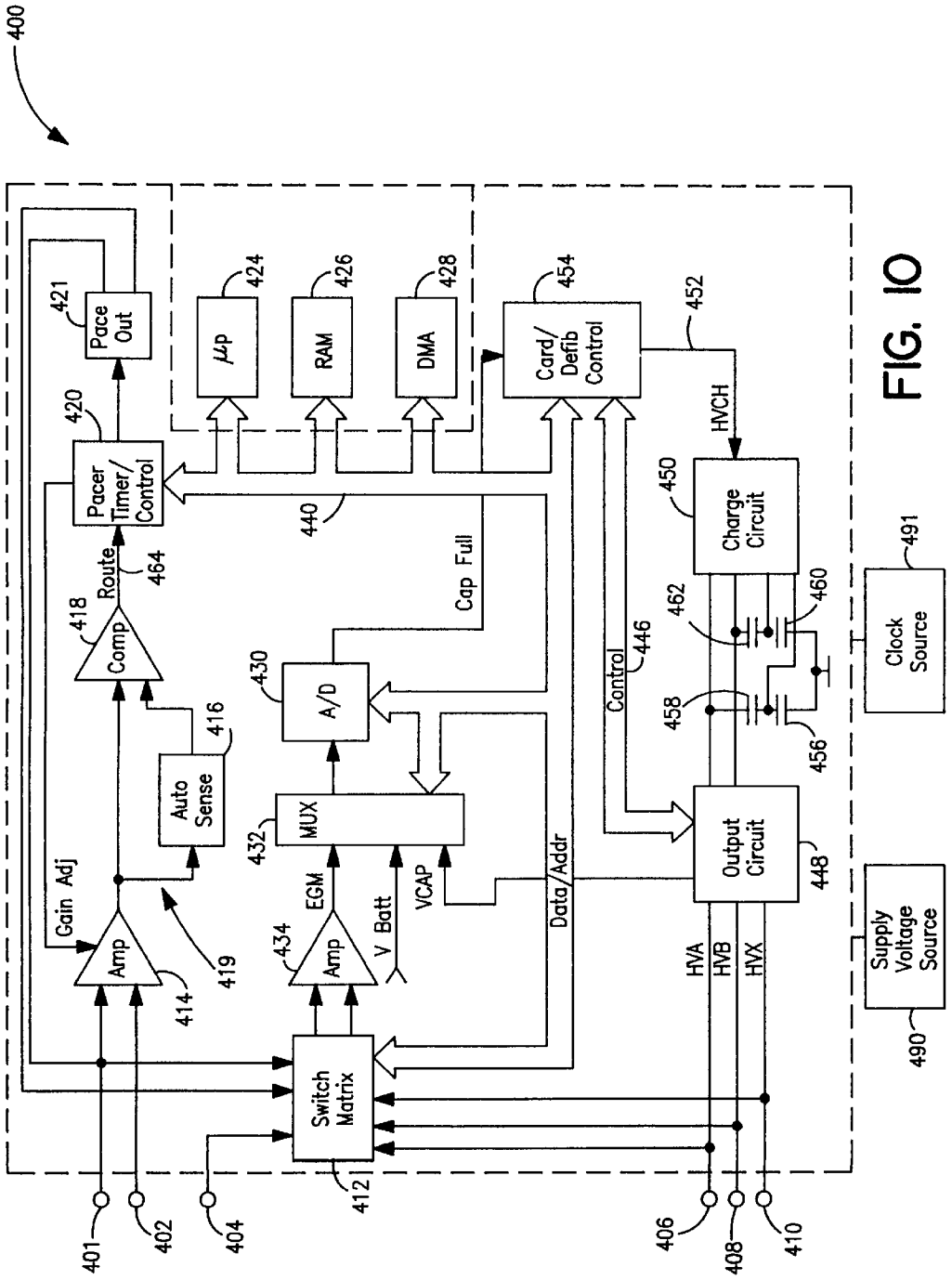
400
Pace Out
421
Pacer Timer/ Control
420
Route
464
Comp
418
Auto Sense
416
Gain Adj
Amp
414
419
Switch Matrix
412
401
402
404
EGM
Amp
434
V Batt
VCAP
MUX
432
A/D
430
Cap Full
440
μp
424
RAM
426
DMA
428
Data/Addr
Card/ Defib Control
454
452
HVCH
Control
446
Charge Circuit
450
462
460
458
456
Output Circuit
448
HVA
HVB
HVX
406
408
410
Clock Source
491
Supply Voltage Source
490

FIG. 10

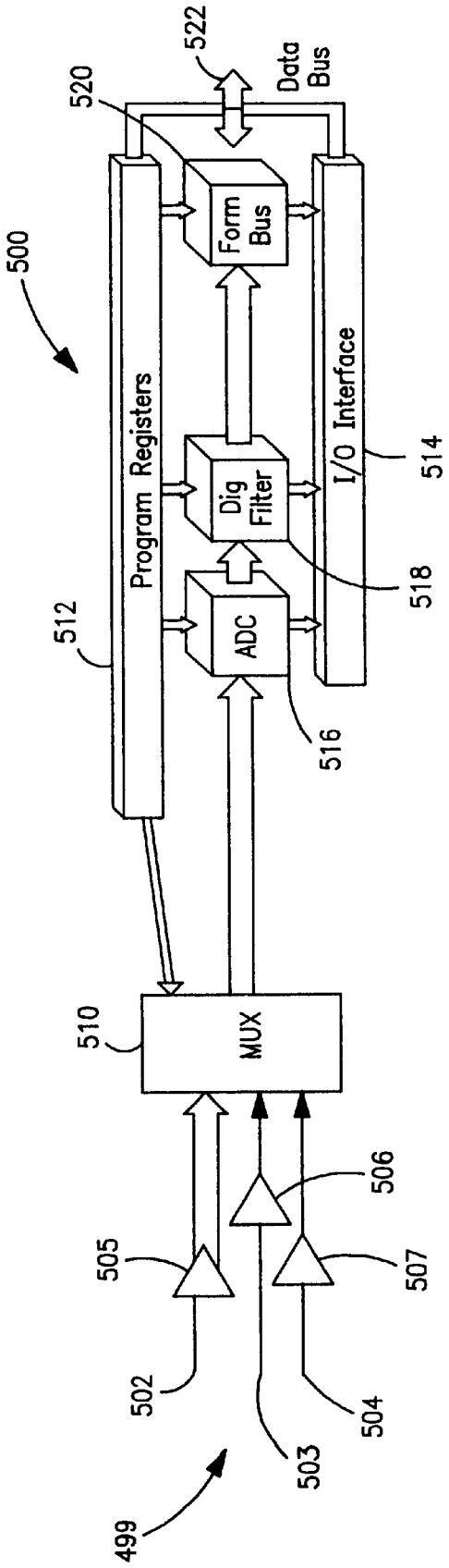
500
522
Data Bus
520
Form Bus
Program Registers
I/O Interface
514
Dig Filter
518
512
ADC
516
510
MUX
506
505
507
502
504
503
499

FIG. 11

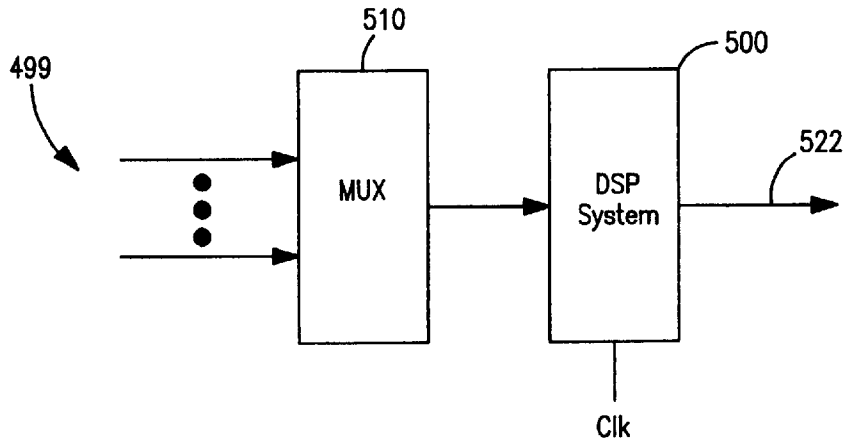
510
500
499
522
MUX
DSP
System
Clk

FIG. 12

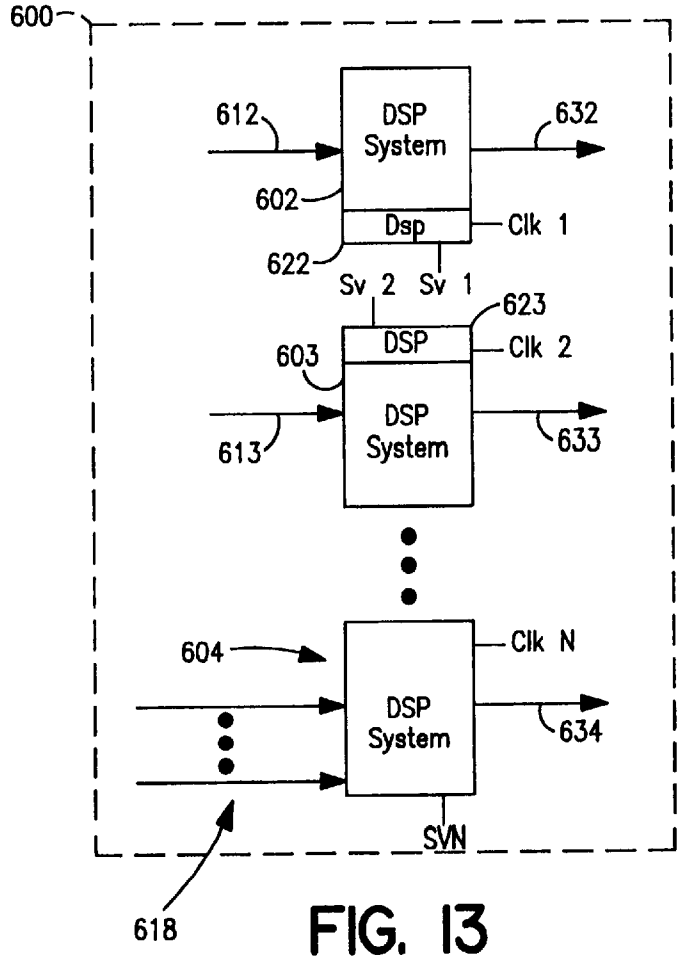
600
612
DSP
System
632
602
Dsp
Clk 1
622
Sv 2
Sv 1
623
603
DSP
Clk 2
DSP
System
613
633
604
Clk N
DSP
System
634
SVN
618

FIG. 13

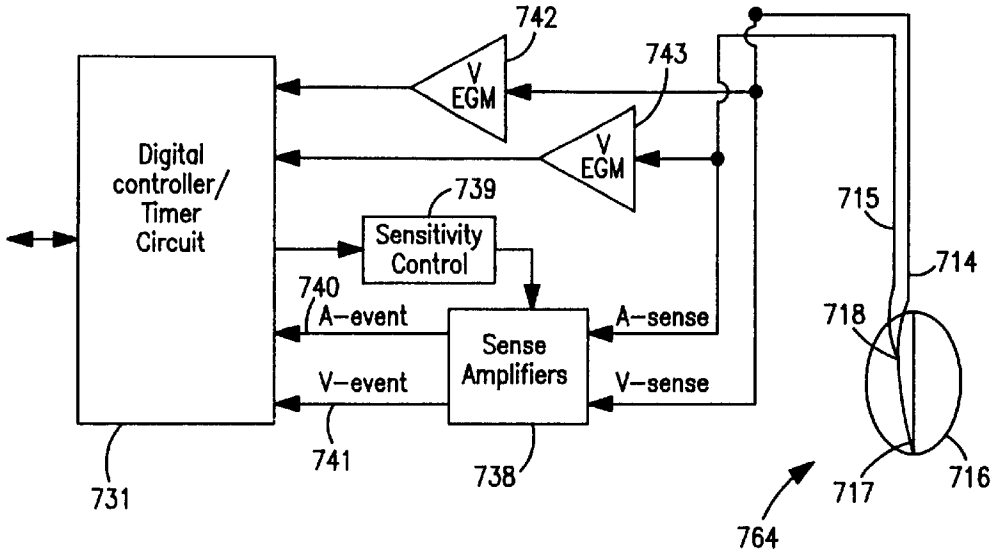
742
743
V EGM
V EGM
Digital controller/ Timer Circuit
739
Sensitivity Control
740
A-event
A-sense
Sense Amplifiers
V-event
V-sense
741
738
731
715
714
718
717
716
764

FIG. 14

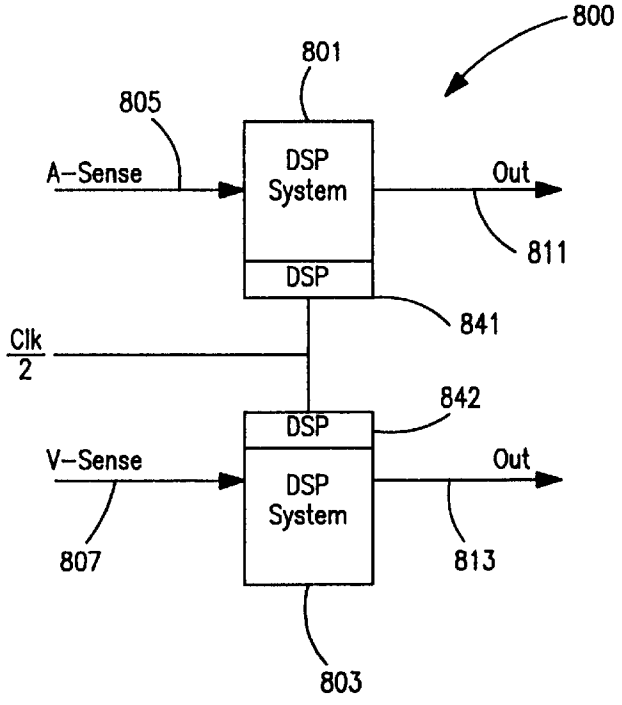
800
801
805
A-Sense
DSP System
Out
811
DSP
841
Clk
2
842
DSP
V-Sense
DSP System
Out
807
813
803

FIG. 15

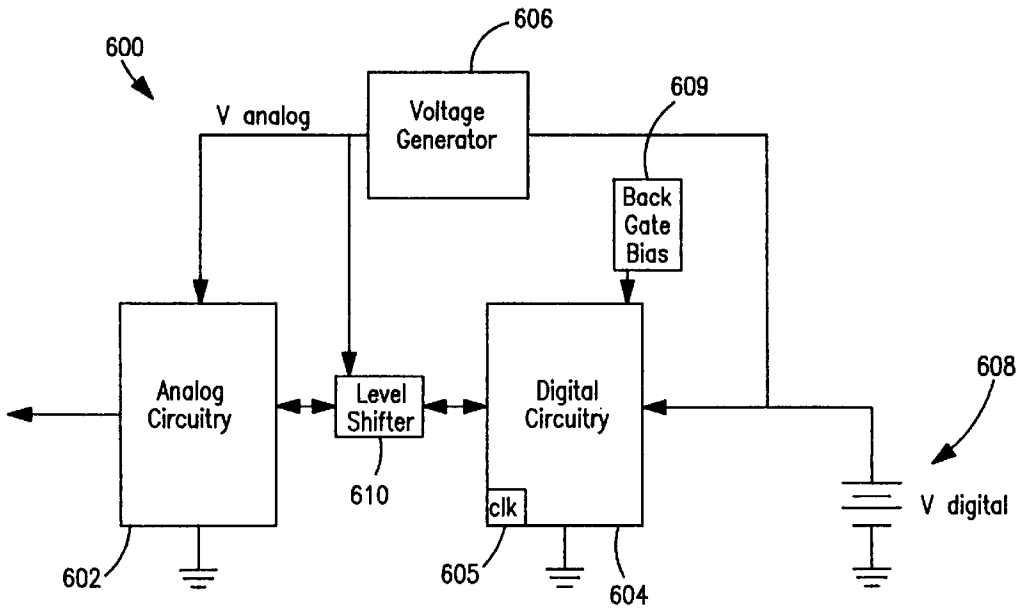
600
606
V analog
Voltage Generator
609
Back Gate Bias
Analog Circuitry
Level Shifter
Digital Circuitry
608
610
clk
V digital
602
605
604

FIG. 16

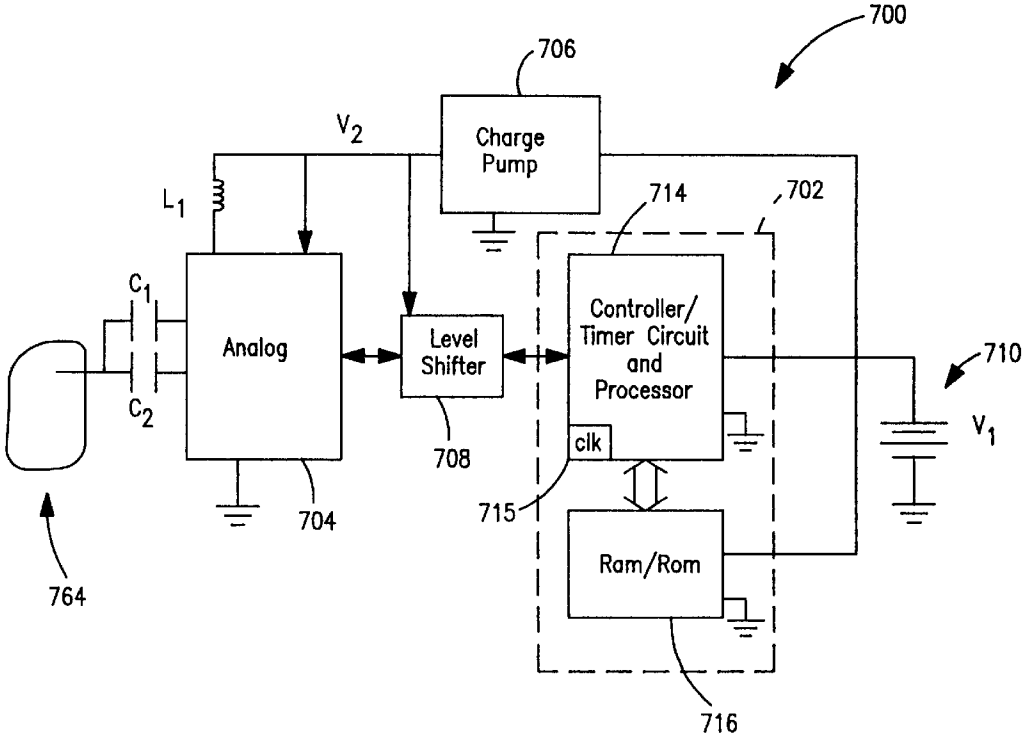
700
706
Charge Pump
V_2
L_1
714
702
C_1
Analog
Level Shifter
Controller/ Timer Circuit and Processor
710
C_2
clk
V_1
708
704
715
Ram/Rom
764
716

FIG. 17

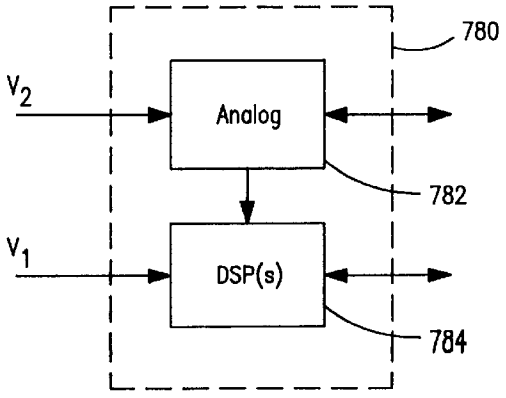
780
V_2
Analog
782
V_1
DSP(s)
784

FIG. 18

POWER CONSUMPTION REDUCTION IN MEDICAL DEVICES EMPLOYING MULTIPLE DIGITAL SIGNAL PROCESSORS AND DIFFERENT SUPPLY VOLTAGES

CLAIM TO PRIORITY AND REFERENCE TO RELATED APPLICATION

This application is a Continuation-In-Part of, and claims priority and other benefits from the filing date of, U.S. patent appln. Ser. No. 09/067,881 for "Power Consumption Reduction in Medical Devices Using Multiple Supply Voltages and Clock Frequency Control" to Thompson, filed April 29, 1998, now abandoned hereby incorporated by reference herein in its entirety.

FIELD OF THE INVENTION

The present invention relates to power consumption of integrated circuit designs such as circuits used in medical devices, particularly implantable devices. More particularly, the present invention pertains to the use of multiple digital signal processors in such circuit designs to reduce power consumption.

BACKGROUND OF THE INVENTION

Various devices require operation with low power consumption. For example, hand-held communication devices require such low power consumption and, in particular, implantable medical devices require low power capabilities. With respect to implantable medical devices, for example, microprocessor-based implantable cardiac devices, such as implantable pacemakers and defibrillators, are required to operate with a lower power consumption to increase battery life and device longevity.

Generally, such low power devices are designed using complementary metal oxide semiconductor (CMOS) technology. CMOS technology is generally used because such technology has the characteristic of substantially zero "static" power consumption.

Power consumption of CMOS circuits consists generally of two power consumption factors, namely "dynamic" power consumption and static power consumption. Static power consumption is only due to current leakage as the quiescent current of such circuits is zero. Dynamic power consumption is the dominant factor of power consumption for CMOS technology. Dynamic power consumption is basically due to the current required to charge internal and load capacitances during switching, i.e., the charging and discharging of such capacitances. Dynamic power (P) equals: $\frac{1}{2}CV_{DD}^2F$, where C is nodal capacitance, F is the clock or switching frequency, and V_{DD} is the supply voltage for the CMOS circuit. As can be seen from the formula for calculating dynamic power (P), such dynamic power consumption of CMOS circuits is proportional to the square of the supply voltage (V_{DD}). In addition, dynamic power (P) is proportional to switching or clock frequency (F).

In accordance with the formula for dynamic power consumption, it has been effective conventionally in CMOS integrated circuit designs to scale down the supply voltage for an entire device (e.g., hybrid) or integrated circuit (IC), i.e., operate the circuit at low supply voltages, to reduce power consumption for such designs. For example, in the MEDTRONIC SPECTRAX® device of circa 1979, IC circuitry was powered by one lithium iodine cell (as opposed to the two cells of the prior art). This reduced the supply voltage to 2.8 volts from 5.6 volts, thus reducing overhead

current. Voltages required to be greater than 2.8 volts were generated by a voltage doubler, or alternatively by a charge pump (e.g., output pacing pulses). Further, for example, in the MEDTRONIC SYMBIOS® device of circa 1983, logic circuitry was powered by a voltage regulator controlling the IC supply voltage to a "sum of thresholds" supply. This regulator provided a supply to the IC (i.e., V_{DD}) of several hundred millivolts above the sum of the n-channel and p-channel thresholds of the CMOS transistors making up the IC. This regulator was self calibrating regarding manufacturing variations of the transistor thresholds.

Other devices have reduced power consumption in other varied manners. For example, various device designs have shut-down analog blocks and/or shut-off clocks to logic blocks not being used at particular times, thereby reducing power. Further, for example, microprocessor based devices have historically used a "burst clock" design to operate a microprocessor at a very high clock rate (e.g., generally 500–1000 Kilohertz (KHz)), for relatively short periods of time to gain the benefit of a "duty cycle" to reduce average current drain. A much lower frequency clock (e.g., generally 32 KHz) is used for other circuitry and/or the processor when not in the high clock rate mode, i.e., burst clock mode. Many known processor based implanted devices utilize the burst clock technique. For example, implanted devices available from Medtronic, Vitatron, Biotronic, ELA, Intermedics, Pacesetters, InControl, Cordis, CPI, etc., utilize burst clock techniques. A few illustrative examples which describe the use of a burst clock are provided in U.S. Pat. No. 4,561,442 to Vollmann et al., entitled "Implantable Cardiac Pacer With Discontinuous Microprocessor Programmable Anti Tachycardia Mechanisms and Patient Data Telemetry," issued Dec. 31, 1985; U.S. Pat. No. 5,022,395 to Russie, entitled "Implantable Cardiac Device With Dual Clock Control of Microprocessor," issued Jun. 11, 1991; U.S. Pat. No. 5,388,578 to Yomtov et al., entitled "Improved Electrode System For Use With An Implantable Cardiac Patient Monitor," issued Feb. 14, 1995; and U.S. Pat. No. 5,154,170 to Bennett et al., entitled "Optimization for Rate Responsive Cardiac Pacemaker," issued Oct. 13, 1992.

FIG. **1** represents a graphical illustration of energy/delay versus supply voltage for CMOS circuits such as a CMOS inverter **10** shown in FIG. **2** for illustrative purposes. The inverter **10** is provided with a supply voltage, V_{DD}, which is connected to the source of a PMOS field effect transistor (FET) **12**. PMOS FET **12** has its drain connected to the drain of an NMOS FET **14** whose source is connected to ground. In this configuration, an input V_i applied to both the gates of FETs **12**, **14** is inverted to provide output V_O. Simply stated, one clock cycle, or logic level change, is used to invert the input V_i to V_O.

As shown in FIG. **1**, the circuit logic delay increases drastically as the supply voltage is reduced to near one volt, as represented by delay line **16** and energy/delay line **18**. As such, reducing of the supply voltage (V_{DD}) continuously to lower levels is impractical because of the need for higher supply voltages when higher frequency operation is required. For example, generally CMOS logic circuits must periodically provide functionality at a higher frequency, e.g., burst clock frequency. However, as the supply voltage (V_{DD}) is decreased, such energy consumption is reduced by the square of the supply voltage (V_{DD}) as is shown by energy consumption line **20**. Therefore, speed requires a higher supply voltage (V_{DD}) which is in direct conflict with low power consumption.

Other problems are also evident when lower supply voltages (V_{DD}) are used for CMOS circuit designs. When a

lower supply voltage is selected, static leakage current losses may arise, particularly at lower frequencies, due to increased static leakage current losses. Various techniques for reducing power consumption in devices are known in the art, some examples of which may be found in at least some of the references listed in Table 1 below.

TABLE 1

Patent No.	Inventor	Issue Date
4,031,899	Renirie	28 June 1977
4,460,835	Masuoka	17 July 1984
4,561,442	Vollmann et al.	31 December 1985
4,791,318	Lewis et al.	13 December 1988
5,022,395	Russie	11 June 1991
5,154,170	Bennett et al.	13 October, 1992
5,185,535	Farb et al.	9 February 1993
5,388,578	Yomtov et al.	14 February 1995
5,610,083	Chan et al.	11 March 1997

All references listed in Table 1 above are hereby incorporated by reference herein, each in its respective entirety. As those of ordinary skill in the art will appreciate readily upon reading the Summary of the Invention, Detailed Description of the Embodiments, and claims set forth below, at least some of the devices and methods disclosed in the publications, patents or patent applications referenced in the present application, including those disclosed in the references listed in Table 1 above, may be modified advantageously in accordance with the teachings of the present invention.

SUMMARY OF THE INVENTION

The present invention has certain objects. That is, various embodiments of the present invention provide solutions to one or more problems existing in the prior art respecting circuitry design having lower power consumption, particularly with respect to implantable medical devices. Those problems include: CMOS, CML, SOS, SOI, BICMOS, PMOS and/or NMOS circuits having excessive dynamic power consumption which reduces battery life; the inability to utilize low voltage supply levels effectively; lack of ability to provide adequate processing capabilities such as high processing capabilities including telemetry uplink/downlink, morphology detection, initialization of devices, while still providing low processing capabilities such as sensing intrinsic beats, pacing, low speed telemetry, with the desired power consumption; and the inability to provide circuit designs that operate at lower frequencies and thus lower power consumption as opposed to the use of higher speed clocks such as burst clocks.

In comparison to known techniques for reducing power consumption in circuit designs, various embodiments of the present invention may provide one or more of the following advantages: reduced power consumption through the use of multiple digital signal processing (DSP) systems; reduced power consumption through the use of a lower voltage supply (V_{DD}); reduced power consumption by decreased clock frequency for circuit designs; increased longevity of circuits, particularly implantable device circuitry; provide a potential reduction in product size; providing high performance processing designs with additional features or functions due to the ability to reduce power with respect to other "required" features and functions; reduced static power consumption; providing multi-processor designs and DSP designs having additional features or functions due to the ability to reduce power with respect to other "required" features and functions; reduced current drain for an overall design, even when operating analog circuitry at higher supply voltages relative to the supply voltages applied to digital circuitry of the design.

Some embodiments of the invention include one or more of the following features: two or more digital signal processing systems; multiple processors, each performing functions at lower clock frequencies to reduce power consumption; a first and second digital signal processor operating on data representative of analog inputs to perform respective first and second functions at respective first and second clock frequencies during a predetermined time period with the first and second clock frequencies being such that the power consumed by the first and second digital signal processors during performance of such functions is less than the power that would be consumed if only one of the processors were to perform the functions within the time period; multiple digital signal processors having supply voltages that are reduced based on the reduction of clock frequency for such processors; providing analog inputs, e.g., cardiac sense signals, to the multiple processors for use in performing functions such as T-wave, P-wave, and R-wave detection; one or more analog circuits of a medical device (e.g., an atrial sense amplifier, a ventricular sense amplifier, a T-wave amplifier, one or more bandpass filters, one or more detection circuits, one or more sensor amplification circuits, one or more physiological signal amplification circuits, one or more output circuits, a battery monitor circuit, and/or a power on reset circuit) and one or more digital circuits of the medical is device (e.g., a processor, a controller and/or a memory) with the supply voltage applied to the analog circuits being greater than that applied to the digital circuits; a source for applying a first fixed supply voltage to digital circuits of a medical device and a voltage generation circuit (e.g., a charge pump circuit) having the first fixed supply voltage applied thereto for generating a second fixed supply voltage to be applied to analog circuits of the medical device; adjustment of back gate bias of digital circuits of the medical device; level shifting of signals being communicated between analog circuits and digital circuits having different supply voltages applied thereto; employing various ones or combinations of the foregoing features in CMOS, CML (Current Mode Logic), SOS (Silicon on Sapphire), SOI (Silicon on Insulator), BICMOS, PMOS and/or NMOS circuitry.

BRIEF DESCRIPTION OF THE DRAWINGS

FIG. **1** is a graphical illustration showing energy/delay versus supply voltage for CMOS circuit operation.

FIG. **2** shows a prior art CMOS inverter which is used as a building block in many CMOS circuit designs.

FIG. **3** is a block diagram of a just-in-time clocking system according to the present invention.

FIGS. **4A–4C** show timing illustrations for use in describing the just-in-time clocking system of FIG. **3**.

FIG. **5** is a block diagram illustration of a multiple supply voltage system according to the present invention.

FIG. **6** is a block diagram illustrating a variable supply voltage system according to the present invention.

FIG. **7** is a block diagram of clock controlled processing circuitry according to the present invention.

FIG. **8** is a diagram illustrating an implantable medical device in a body.

FIG. **9** is a block diagram of the circuitry of a pacemaker for use in illustrating one or more embodiments of the present invention.

FIG. **10** is a schematic block diagram of an implantable pacemaker/cardioverter/defibrillator (PCD) for use in illustrating one or more embodiments of the present invention.

FIG. **11** is a schematic block diagram illustrating a variable lock/variable supply voltage digital signal processing system according to the resent invention.

FIG. **12** is a schematic block diagram generally illustrating the system of FIG. **11**.

FIG. **13** is a schematic block diagram generally illustrating reduction in power consumption using multiple digital signal processing systems according to the present invention.

FIG. **14** is a schematic block diagram of a portion of cardiac pacemaker including sense amplifiers for receiving cardiac sense signals.

FIG. **15** is a two digital signal processing system embodiment of a system according to FIG. **13** illustrating implementation of the sense amplifier functions illustrated in FIG. **14** according to the present invention.

FIG. **16** is a general schematic block diagram of a device according to the present invention using different supply voltages for analog and digital circuits of the device.

FIG. **17** is a more detailed schematic block diagram of one embodiment of a pacemaker much like that shown in FIG. **9** according to the present invention wherein a lower supply voltage is applied to the digital circuits of the pacemaker with a charge pump being used to generate a higher supply voltage to be applied to the analog circuits of the pacemaker.

FIG. **18** is a block diagram illustrating the use of digital signal processor(s) in the embodiment shown in FIG. **17**.

DETAILED DESCRIPTION OF THE EMBODIMENTS

One embodiment of the present invention is first generally described in reference to FIGS. **3**–**15**. More particularly, at least in part the use of multiple DSP systems to reduce power consumption is shown in those Figures.

FIG. **3** shows a general block diagram of a just-in-time clock system **30**. Just-in-time clock system **30** includes integrated circuit **32** and clock source **34**. Integrated circuit **32** includes a plurality of circuits C**1**-Cn. Each circuit when operable is capable of performing one or more circuit functions. A function is defined herein as any operation performed on one or more inputs in a plurality of cycles that results in an output. Generally, the functions performed by the various circuits C**1**-Cn are usually, although not necessarily always, performed in a predetermined number of clock cycles. Clock source **34** is operable for providing clock signals at a plurality of clock frequencies generally shown as clock**1**-clockn.

Circuits C**1**-Cn of integrated circuit **32** may include discrete function circuits (e.g., logic circuits for operating upon one or more inputs to implement a particular function to provide one or more outputs therefrom), such as circuits operating on one input from a sensor to provide a representative signal to further functional circuitry, transceiver circuitry, conversion circuitry, etc. Moreover, circuits C**1**-Cn may comprise data processing circuitry capable of performing multiple functions under program control. Alternatively, such circuits C**1**-Cn may implement firmware (software) functions/routines that must complete prior to some succeeding event or prior to the start of the next function. For example, as described further herein with respect to illustrative embodiments of implantable medical devices, such circuits may include digital signal processing circuits, telemetry uplink/downlink circuitry, morphology detection circuitry, arrhythmia detection circuitry, monitoring circuitry, pacing circuitry, microprocessors, and so on.

The functions performed by each of circuits C**1**-Cn are typically required to be completed in a particular time period prior to a next functional process being undertaken. For example, one logic circuit may perform a function in a predetermined time period to provide an output required by another circuit, or for example, a function may need to be performed by processing circuitry during a particular period of time due to the need for other processing to be performed by such processing circuitry. In another example pertaining especially to an implantable medical device, processing to complete a particular function may need to be performed in a portion of a particular time interval such as a blanking interval, an upper rate interval, an escape interval, or refractory interval of a cardiac cycle, or further, such as during a pulse generator/ programmer handshake.

Clock source **34** may be configured in any manner for providing clock signals at a plurality of frequencies. Such a clock source may include any number of clock circuits wherein each provides a single clock signal at a particular frequency, clock source **34** may include one or more adjustable clock circuits for providing clock signals over a continuous range of clock frequencies, and/or clock source **34** may include a clock circuit that is operable to provide clock signals at discrete clock frequencies as opposed to over a continuous range. For example, the clock source **34** may include oscillators, clock dividers, timers, clock control circuitry or any other circuit elements required for providing clock signaling according to the present invention. Preferably, clock source **34** is configured as a continuously oscillating low frequency clock and a controllable on/off higher frequency clock.

Just-in-time controllable clock operation of the just-in-time clocking system **30** of FIG. **3** is described herein in reference to FIGS. **4**A–**4**C. As shown in FIG. **4**A, time period (x) represents the time period in which a circuit, e.g., one of circuits C**1**-Cn, is required to complete one or more functions. The same time period (x) is shown in FIG. **4**B. The time period x may be equated to any number of different time periods. For example, the time period may be the amount of time a processing circuit has to perform a particular detection function due to the need for a detection output by a certain point in time, may be a time period required to complete a particular function by a certain logic circuit so as to provide a timely output to a digital signal processing circuit, may be a time period to complete a firmware (software) routine, etc. Moreover, time period x may correspond to a cardiac cycle or a part thereof.

As shown in FIG. **4**B, and according to conventional processing, circuit functions were typically performed at a burst cycle frequency and, as such, the function performed required a time period **60**. Therefore, only a small amount of time (e.g., time period **60**) of the entire time period x was used to perform the one or more functions requiring n cycles of time to complete. In such a case, conventionally, such burst clocks were at a substantially high clock rate, e.g., 500–1000 KHz, for such short periods of time to gain the benefit of a "duty cycle" to reduce average current drain. However, such high clock rates may not be required for carrying out such functions, or all functions.

With just-in-time clocking according to the present invention, as shown in FIG. **4**A, substantially the entire time period x is used to perform the one or more functions which are completed in n cycles. In other words, the clock

frequency, e.g., one of clock1-clockn, for the circuit performing the one or more functions during the time period x is set such that the one or more functions are completed in the maximum time available for performing such functions, i.e., the clock frequency is at its lowest possible value. Stated another way, a lower frequency clock is employed such that the one or more functions are performed just-in-time for other circuit or routine functionality to be performed.

In such a just-in-time manner, the clock frequency used to control the performance of such functions by the particular CMOS, CML, SOS, SOI, BICMOS, PMOS and/or NMOS circuitry is lowered resulting in reduced power consumption by such circuitry. According to calculations of dynamic power, the lower frequency results in proportional power reduction. With the lowering of the clock frequency, the integrated circuit **32** including the various circuits C1-Cn can be designed to operate at a lower frequency, e.g., as opposed to burst frequency, and also at various other frequencies depending upon need.

It is preferred that use of substantially the entire predetermined period of time result in completion of the one or more functions being performed prior to the end of the time period x as is represented by remainder time periods **55** in FIG. **4**A. This remainder time period **55**, for example, is preferably near or about 0 seconds.

FIG. **4**C shows an illustrative timing example for processing circuitry which performs multiple functions. For example, the cardiac cycle of a patient is represented in FIG. **4**C as time period x. During time period **71**, i.e., during a QRS complex of the cardiac cycle, high speed processing is performed at a high clock frequency relative to a lower clock frequency used to control operation of the processing circuitry during time period y. During the time period y, when the processing circuitry is operated at a lower clock frequency, such lower clock frequency may be set such that the functions performed during z cycles are performed in substantially the entire maximum time period available for such processing, i.e., time period y. Once again, a small remainder time period **75** of the cardiac cycle time period x may exist. Such time period may be, for example, in the range of about 1.0 millisecond to about 10.0 milliseconds when the cardiac cycle is in the range of about 400 milliseconds to about 1200 milliseconds.

FIG. **5** shows a general block diagram of a multiple supply voltage system **100** wherein one or more supply voltages are available and tailored for application to various circuits in an IC. The multiple supply voltage system **100** includes integrated circuit **102** and supply voltage source **106**. Integrated circuit **102** includes circuits C1-Cn. Supply voltage source **106** is operable for providing a plurality of supply voltages V1-Vn. Each supply voltage from supply voltage source **106** is tailored to be applied to one or more circuits of circuits C1-Cn. As illustrated, supply voltage V1 is applied to circuit C1, supply voltage V2 is applied to circuit C2 and C3, and so forth.

The tailoring of the supply voltages V1-Vn to the particular circuits C1-Cn is dependent upon the frequency at which the circuits C1-Cn are required to be operated. For example, and as previously described, the logic delay of such CMOS, CML, SOS, SOI, BICMOS, PMOS and/or NMOS circuitry circuits C1-Cn increases drastically as the supply voltage is reduced to near 1 volt. If such logic delay is tolerable, the supply voltage provided to a particular circuit will drastically reduce the power consumption for that particular circuit as the energy is reduced in proportion to the square of the supply voltage (V_{DD}). However, if such logic delay is not tolerable, for example, if the logic circuit performs a function that must be completed within a particular period of time, the reduction of the supply voltage (V_{DD}) applied to such a circuit will be limited depending upon the acceptable logic delay. However, the supply voltage V_{DD} for any particular circuit can be reduced as low as possible yet meet adequate speed requirements.

Integrated circuit **102** may include various different circuits C1-Cn like those described with reference to FIG. **3**. The supply voltage source **106** may be implemented using a variety of components and may include any number of voltage sources wherein each provides a single supply voltage level, may include one or more adjustable voltage sources for providing supply voltage levels over a continuous range of levels, and/or may include a voltage source that is operable to provide discrete supply voltage levels as opposed to levels over a continuous range. The supply voltage source may include a voltage divider, a voltage regulator, a charge pump, or any other elements for providing the supply voltages V1-Vn. Preferably, the supply voltage source **106** is configured as a charge pump.

In the typical case, supply voltage (V_{DD}) is generally in the range of about 3 volts to about 6 volts. Preferably, and in accordance with the present invention, the supply voltages V1-Vn are in the range of about 1 volt to about 3 volts dependent upon the particular CMOS, CML, SOS, SOI, BICMOS, PMOS and/or NMOS technology used. With reduction in supply voltage (V_{DD}), the threshold voltage (V_T) for the circuits is also reduced. For example, with supply voltages in the range of about 3 to about 6 volts, the threshold voltage for CMOS, CML, SOS, SOI, BICMOS, PMOS and/or NMOS devices is generally in the range of about 0.8 volts to about 1.0 volt. Preferably, in implantable medical devices, lithium chemistries are utilized for implantable batteries. Such lithium chemistries are generally in the range of about 2.8 volts to about 3.3 volts and generally the CMOS, CML, SOS, SOI, BICMOS, PMOS and/or NMOS circuitry has an associated threshold voltage of about 0.75.

By reducing the supply voltages below about 2.8 volts, voltage thresholds for CMOS, CML, SOS, SO, BICMOS, PMOS and/or NMOS devices may be decreased to as low as about 0.2 volts to about 0.3 volts. Currently, there are various ultra low power logic designs operating at a supply voltage as low as about 1.1 volts, as for example logic circuitry for microprocessors for laptop and is other portable computer applications. By utilizing the tailored supply voltages V1-Vn, low power or ultra low power logic designs may be employed for at least some of the various circuits C1-Cn of integrated circuit **102**. Other circuits may require higher supply voltages. With the use of lower threshold levels due to lower supply voltages, static power consumption losses undesirably increase by several orders of magnitude.

Multiple supply voltage system **100** may therefore further optionally include back gate bias source **130** for providing back gate bias voltages BV1-BVn to circuits C1-Cn of integrated circuit **102**. Generally, back gate bias voltages BV1-BVn are dependent upon the supply voltage V1-Vn applied to the circuits C1-Cn to adjust the threshold voltages for devices of circuits C1-Cn. For example, the threshold voltage (V_T) for the CMOS, CML, SOS, SOI, BICMOS, PMOS and/or NMOS devices of the circuit may be at a lower value by providing a back gate bias voltage to the particular circuits supplied with the lower supply voltage. Moreover, if circuit C1 is supplied with a lower supply voltage V1, then a back gate bias voltage BV1 may option-

ally be applied to circuit C1 to adjust the threshold voltage (V_T) for the CMOS, CML, SOS, SOI, BICMOS, PMOS and/or NMOS devices to a higher threshold voltage (V_T) value. In such a manner, static leakage current losses can be minimized because the equivalent higher threshold voltage has been restored. Moreover, a broader range of supply voltages is possible because the back gate adjustment allows a tailoring of the threshold allowing high/low speed operation and eliminating the static current drain leakage.

The back gate bias voltage may be provided by, for example, a fixed voltage source (e.g., a charge pump) connected to the back gate well via a contact. Alternatively, an active body bias scheme whereby the voltage source is selectable or adjustable over an appropriate range may be used.

Back gate voltages may be applied in manners well know in the art. The application of back gate bias voltages is described, for example, in various patent references, including U.S. Pat. No. 4,791,318 to Lewis et al., U.S. Pat. No. 4,460,835 to Masuoka, U.S. Pat. No. 5,610,083 to Chan et al. and U.S. Pat. No. 5,185,535 to Farb et al., all incorporated by reference herein in their respective entireties.

FIG. **6** shows a general block diagram of a variable supply voltage/variable clock system **150** according to the present invention. System **150** includes integrated circuit **152**, clock source **156**, supply voltage source **154**, and clock/supply voltage interface **155**. Supply voltage source **154** is operable for providing a plurality of supply voltages V1-Vn to a plurality of circuits C1-Cn of integrated circuit **152**. Clock source **156** of system **150** is operable for providing clock signals at a plurality of frequencies, clock1-clockn. Circuits C1-Cn are of a similar nature to those described with reference to FIG. **3**. Clock source **156** is similar to the clock source **34** as described with reference to FIG. **3**. Supply voltage source **154** is similar to supply voltage source **106** described in reference to FIG. **5**. In variable supply voltage/variable clock system **150**, however, clock/voltage interface **155** is employed to adjust supply voltages V1-Vn applied to the circuits C1-Cn "on the fly," as required by specific timing functions required by or inherent to circuits C1-Cn.

As an illustrative example, circuit C1 may be a particular logic circuit for performing one or more particular functions. Such functions may be required to be performed, however, in a first time period at a first clock frequency and during a different second time period at a second clock frequency so that such function may be performed within the allowed time of the respective first and second time periods. That is, one time period is shorter than the other and, as such, the functions which require performance over a certain number of cycles must be performed at a higher clock frequency if it is to be completed within a time period that is shorter than another time period.

In such an example, and according to the present invention, clock/voltage interface **155** detects the clock signal applied to circuit C1 during the first time period in which the higher frequency clock signal is used and accordingly provides supply voltage source **154** with a signal to select and apply a certain supply voltage corresponding to the higher clock frequency. Thereafter, when the lower clock frequency is applied to circuit C1 during the second time period, clock/voltage interface **155** senses the use of the lower clock frequency and applies a signal to voltage supply source **154** for application of a certain supply voltage corresponding to the lower clock frequency for application to circuit C1.

In another example, circuit C2 may be a CMOS, CML, SOS, SOI, BICMOS, PMOS and/or NMOS processor which may also have clock frequency and corresponding supply voltage adjustments made "on the fly." Such a system will become readily apparent to those skilled in the art from the following discussion referring to FIG. **7**.

FIG. **7** shows a general block diagram of clock controlled processing system **200** according to the present invention. Clock controlled processing system **200** includes processor **202** (e.g., a CMOS, CML, SOS, SOI, BICMOS, PMOS and/or NMOS microprocessor or CMOS, CML, SOS, SOI, BICMOS, PMOS and/or NMOS digital signal processor), clock source **204**, supply voltage source **206**, voltage regulator **212**, regulator interface **210**, clock control **208**, and optional back gate bias source **214**. In a manner similar to that described in reference to FIG. **6**, the supply voltage **206** applied to processor **202** is changed "on the fly," as required by specific circuit timing requirements.

Generally, processor **202** is operated under control of clock source **204**. Depending upon the processing capability required, clock source **204** may operate processor **202** at any one of a plurality of clock frequencies. Such clock frequencies may be selected under the control of clock control **208**. Clock control **208** may be part of any timing and control hardware and/or timing and control software used to control operation of processor **202** as part of a larger system. Such clock control may take the form, for example, of a digital controller/timer circuit for performing timing control of an implantable medical device.

Processor **202** may perform any number of functions as appropriate for the device in which it is used. High frequency processing capabilities (i.e., about 250 KHz to about 10 MHz), low frequency processing capabilities (i.e., about 1 Hz to about 32 KHz), and processing capabilities with regard to frequencies between such limits are contemplated according to the present invention. For simplicity purposes, clock control processing system **200** operation shall be described with reference to processor **202** performing only two different functions, each during a predetermined respective period of time. For example, with respect to an implantable medical device such as a pacemaker, during the first period of time, a high processing function requiring a relatively high clock frequency may include a function such as telemetry uplink/downlink, morphology detection, initialization, arrhythmia detection, far-field R-wave detection, EMI detection, retrograde conduction, etc. On the other hand, low frequency processing functions may include a function such as sensing intrinsic beats, pacing, low speed telemetry, transtelephonic data transfer, remote monitoring, battery checks, etc.

When processor **202** performs high frequency processing functions during a predetermined time period, a relatively high clock frequency (e.g., about 250 KHz to about 10 MHz) may be supplied by clock source **204** for operation of processor **202**. Regulator interface **210** will detect the higher clock frequency applied to processor **202** for operation during the high processing function and apply a control signal to voltage regulator **212** for regulation of the supply voltage source **206**. Supply voltage source **206** is operable under control of voltage regulator **212** to provide a supply voltage within a predetermined range, preferably between about 1.1 volts and about 3 volts. When a high clock frequency is employed to operate processor **202** for high frequency processing functions, supply voltage source **206** generally applies a supply voltage in the upper range of the preferred supply voltages to the CMOS, CML, SOS, SOI, BICMOS, PMOS and/or NMOS devices of processor **202**.

On the other hand, when processor **202** executes low frequency processing functions during predetermined peri-

ods of time, clock control **208** signals clock source **204** to apply a lower frequency for operation of processor **25 202**. As such, regulator interface **210** detects the lower frequency being used to operate processor **202** and issues a control signal to voltage regulator **212** for regulation of supply voltage source **206** such that a lower supply voltage in the lower end of the preferred range of supply voltages is applied to the CMOS, CML, SOS, SOI, BICMOS, PMOS and/or NMOS devices of processor **202**.

It will be recognized by those skilled in the art that any intermediate processing capability may be achieved between the higher frequency and the lower frequency capabilities described hereinabove, and that the scope of the present invention is not limited to processing at only two clock frequencies and at two corresponding supply voltages. Instead, multiple levels of processing capability may be achieved according to the present invention with associated clock frequencies and corresponding supply voltages being applied to processor **202**.

FIG. **4**C illustrates one embodiment of the clock control processing system **200** of the present invention. As shown in FIG. **4**C, during the overall cardiac cycle of predetermined time period x, a high frequency is employed to control operation of processor **202** during time period **71** of the cardiac cycle time period x (e.g., during processing of the QRS complex). Thereafter, a lower clock frequency is used during time period y for controlling operation of processor **202** to perform any of a number of other different functions, such as cardiac event/EMI differentiation functions. During operation of the processor **202** at the higher clock frequency during time period **71**, a higher supply voltage from supply voltage source **206** is applied to the CMOS, CML, SOS, SOI, BICMOS, PMOS and/or NMOS circuitry devices of processor **202**. Likewise, during operation of the processor **202** at the relatively lower clock frequency, a lower supply voltage from supply voltage source **206** is applied to the CMOS, CML, SOS, SOI, BICMOS, PMOS and/or NMOS devices of processor **202** during time period y of the overall cardiac cycle time period x.

Moreover, and as shown in FIG. **7**, an optional back gate bias **214** may be used to dynamically adjust the threshold voltage (V_T) of CMOS, CML, SOS, SOI, BICMOS, PMOS and/or NMOS circuitry devices of processor **202** as a function of the clock frequency applied to processor **202** by clock source **204**. The regulator interface **210** detects the clock frequency used to control operation of processor **202** and controls the voltage level of back gate bias **214** to be applied to the CMOS, CML, SOS, SOI, BICMOS, PMOS and/or NMOS devices of processor **202**. The dynamic adjustment of the threshold voltage may be implemented as an adjustable or selectable voltage source utilizing, for example, a charge pump and a regulator. The back gate voltage and the "normal" gate voltage provide a gate bias or voltage to the transistor. By adjusting the back gate voltage, the "apparent" voltage is increased with a resultant reduction in leakage current.

FIG. **8** is a simplified diagram of implantable medical device **260** for which the present invention finds particularly efficacious application. Implantable medical device **260** is implanted in body **250** near human heart **264**. Implantable medical device **260** is connected to heart **264** by leads **262**. In the case where device **260** is a pacemaker, leads **262** may be pacing and sensing leads for sensing electrical signals attendant to the depolarization and repolarization of heart **264**, and for providing pacing pulses in the vicinity of the distal ends thereof.

Implantable medical device **260** may be any implantable cardiac pacemaker such as those disclosed in U.S. Pat. No. 5,158,078 to Benneft et al., U.S. Pat. No. 5,387,228 to Shelton, U.S. Pat. No. 5,312,453 to Shelton et al., or U.S. Pat. No. 5,144,949 to Olson, all hereby incorporated herein by reference in their respective entireties and which can all be modified according to the present invention.

Implantable medical device **260** may also be a pacemaker/cardioverter/defibrillator (PCD) corresponding to any of the various commercially-available implantable PCDs, one of which is summarily described herein with reference to FIG. **10** and described in detail in U.S. Pat. No. 5,447,519. In addition to the PCD described in U.S. Pat. No. 5,447,519, the present invention may be practiced in conjunction with PCDs such as those disclosed in U.S. Pat. No. 5,545,186 to Olson et al., U.S. Pat. No. 5,354,316 to Keimel, U.S. Pat. No. 5,314,430 to Bardy, U.S. Pat. No. 5,131,388 to Pless, or U.S. Pat. No. 4,821,723 to Baker et al., all hereby incorporated herein by reference in their respective entireties. Those devices may be employed using the present invention in that such devices may employ or be modified with circuitry and/or systems according to the present invention.

Alternatively, implantable medical device 260 may be an implantable nerve stimulator or muscle stimulator such as those disclosed in U.S. Pat. No. 5,199,428 to Obel et al., U.S. Pat. No. 5,207,218 to Carpentier et al., or U.S. Pat. No. 5,330,507 to Schwartz, or an implantable monitoring device such as that disclosed in U.S. Pat. No. 5,331,966 issued to Bennet et al., all of which are hereby incorporated by reference herein in their respective entireties.

Finally, implantable medical device **260** may be a cardioverter, an implantable pulse generator (IPG) or an implantable cardioverter-defibrillator (ICD).

It is to be understood, however, that the scope of the present invention is not limited to implantable medical devices or medical devices only, but includes any type of electrical device which employs CMOS, CML (Current Mode Logic), SOS (Silicon on Sapphire), SOI (Silicon on Insulator), BICMOS, PMOS and/or NMOS circuitry or circuit design where low power consumption is desired.

In general, implantable medical device **260** includes an hermetically-sealed enclosure that includes an electrochemical cell such as a lithium battery, CMOS circuitry that controls device operations, and a telemetry transceiver antenna and circuit that receives downlinked telemetry commands from and transmits stored data in a telemetry uplink to an external programmer. The circuitry may be implemented in discrete logic and/or may include a microcomputer-based system with A/D conversion.

It is to be understood that the present invention is not limited in scope to particular electronic features and operations of particular implantable medical devices and that the present invention may be useful in conjunction with various implantable devices. Moreover, the present invention is not limited in scope to implantable medical devices including only a single processor but may be applicable to multiple-processor devices as well.

FIG. **9** shows a block diagram illustrating the components of pacemaker **300** in accordance with one embodiment of the present invention. Pacemaker **300** has a microprocessor-based architecture. Illustrative pacemaker **300** of FIG. **9** is only one exemplary embodiment of such devices, however, and it will be understood that the present invention may be implemented in any logic-based, custom integrated circuit architecture or in any microprocessor-based system.

In the illustrative embodiment shown in FIG. **9**, pacemaker **300** is most preferably programmable by means of an external programming unit (not shown in the figures). One

such programmer suitable for the purposes of the present invention is the commercially available Medtronic Model 9790 programmer. The programmer is a microprocessor-based device which provides a series of encoded signals pacemaker **300** by means of a programming head which transmits radio frequency (RF) encoded signals to antenna **334** pacemaker **300** according to a telemetry system such as, for example, that described in U.S. Pat. No. 5,127,404 to Wybomy et al., the disclosure of which is hereby incorporated by reference herein in its entirety. It is to be understood, however, that any programming methodology may be employed so long as the desired information is transmitted to and from the pacemaker. Pacemaker device **300** illustratively shown in FIG. **9** is electrically coupled to the patient's heart **264** by leads **302**. Lead **302***a* including electrode **306** is coupled to a node **310** in the circuitry pacemaker **300** through input capacitor **308**. Lead **302***b* is coupled to pressure circuitry **354** of input/output circuit **312** to provide a pressure signal from sensor **309** to the circuit **354**. The pressure signal is used to ascertain metabolic requirements and/or cardiac output of a patient. Further, activity sensor **351**, such as a piezoceramic accelerometer, provides a sensor output to activity circuit **352** of input/output circuit **312**. The sensor output varies as a function of a measured parameter that relates to metabolic requirements of a patient. Input/output circuit **312** contains circuits for interfacing to heart **264**, to activity sensor **351**, to antenna **334**, to pressure sensor **309** and circuits for application of stimulating pulses to heart **264** to control its rate as a function thereof under control of software-implemented algorithms in microcomputer unit **314**.

Microcomputer unit **314** preferably comprises on-board circuit **316** that includes microprocessor **320**, system clock circuit **322**, and on-board random access memory (RAM) **324** and read only memory (ROM) **326**. In this illustrative embodiment, off-board circuit **328** comprises a RAM/ROM unit. On-board circuit **316** and off-board circuit **328** are each coupled by a communication bus **330** to digital controller/timer circuit **332**.

According to the present invention, the circuits shown in FIG. **9** are powered by an appropriate implantable battery supply voltage source **301** (e.g., a voltage source generally shown in FIGS. **1–7**). For the sake of clarity, the coupling of supply voltage source **301** to various circuits pacemaker **300** is not shown in the figures. Further, the circuits operable under control of a clock signal shown in FIG. **9** are operated according to the present invention under clock source **338**. For the sake of clarity, the coupling of such clock signals from the clock source **338** (e.g., a clock source generally shown in FIGS. **1–7**) to such CMOS, CML, SOS, SOI, BICMOS, PMOS and/or NMOS circuits of pacemaker **300** is not shown in the Figures.

Antenna **334** is connected to input/output circuit **312** to permit uplink/downlink telemetry through RF transmitter and receiver unit **336**. Unit **336** may correspond to the telemetry and program logic disclosed in U.S. Pat. No. 4,556,063 issued to Thompson et al., hereby incorporated by reference herein in its entirety, or to that disclosed in the above-referenced Wyborny et al. patent.

V_{REF} and bias circuit **340** generates a stable voltage reference and bias currents for circuits of input/output circuit **312**. Analog-to-digital converter (ADC) and multiplexer unit **342** digitize analog signals and voltages to provide "real-time" telemetry intracardiac signals and battery end-of-life (EOL) replacement function. A power on reset circuit **341** functions as a means to reset circuitry.

Operating commands for controlling the timing pacemaker **300** are coupled by bus **330** to digital controller/timer circuit **332**, where digital timers and counters establish the overall escape interval of pacemaker **300** as well as various refractory, blanking, and other timing windows for controlling the operation of the peripheral components disposed within input/output circuit **312**.

Digital controller/timer circuit **332** is preferably coupled to sense circuitry **345** and to electrogram (EGM) amplifier **348** for receiving amplified and processed signals sensed by electrode **306** disposed on lead **302***a*. Such signals are representative of the electrical activity of the patient's heart **264**. Sense amplifier **346** of circuitry **345** amplifies sensed electrocardiac signals and provides an amplified signal to peak sense and threshold measurement circuitry **347**. Circuit **347** in turn provides an indication of peak sensed voltages and measured sense amplifier threshold voltages on path **357** to digital controller/timer circuit **332**. An amplified sense amplifier signal is also provided to comparator/threshold detector **349**. The sense amplifier may correspond to that disclosed in U.S. Pat. No. 4,379,459 to Stein, which is hereby incorporated by reference herein in its entirety.

The electrogram signal provided by EGM amplifier **348** is employed when the implanted device **300** is being interrogated by an external programmer (not shown) to transmit by uplink telemetry a representation of an analog electrogram of the patient's electrical heart activity. Such functionality is, for example, shown in U.S. Pat. No. 4,556,063 to Thompson et al., previously incorporated by reference.

Output pulse generator and amplifier **350** provides pacing stimuli to the patient's heart **264** through coupling capacitor **305** and electrode **306** in response to a pacing trigger signal provided by digital controller/timer circuit **332**. Output amplifier **350** may correspond generally to the output amplifier disclosed in U.S. Pat. No. 4,476,868 to Thompson, also incorporated by reference herein in its entirety. The circuits of FIG. **9** comprise CMOS, CML, SOS, SOI, BICMOS, PMOS and/or NMOS circuitry capable of operation according to the present invention include processor **320**, digital controller timer circuit **332**, RAM **324**, ROM **326**, RAM/ROM unit **328** and ADC/Mux **342**.

FIG. **10** is a functional schematic diagram from U.S. Pat. No. 5,447,519 to Peterson, which shows implantable PCD **400** in which the present invention may usefully be practiced. This diagram is an illustration to be taken only as an exemplary type of device in which the invention may be embodied, and not as limiting to the scope of the present invention. Other implantable medical devices as previously described having functional organizations wherein the present invention may be useful may also be modified in accordance with the present invention. The present invention is also believed to be useful, for example, in conjunction with implantable PCDs such as those disclosed in U.S. Pat. No. 4,548,209 to Wielders et al.; U.S. Pat. No. 4,693,253 to Adams et al.; U.S. Pat. No. 4,830,006 to Haluska et al.; and U.S. Pat. No. 4,949,730 to Pless et al.; all of which are incorporated herein by reference in their respective entireties.

Illustrative PCD **400** is provided with six electrodes **401**, **402**, **404**, **406**, **408**, and **410**. Electrodes **401** and **402** may be a pair of closely-spaced electrodes, for example, that are positioned in the ventricle of heart **264**. Electrode **404** may correspond to a remote, indifferent electrode located on the housing of the implantable PCD **400**. Electrodes **406**, **408**, and **410** may correspond to large surface area defibrillation electrodes located on leads to the heart **264** or epicardial electrodes.

Electrodes **401** and **402** are shown as hard-wired to the near field (i.e., narrowly spaced electrodes) R-wave detector

circuit **419** comprising band pass filtered amplifier **414**, auto threshold circuit **416** (for providing an adjustable sensing threshold as a function of the measured R-wave amplitude), and comparator **418**. An Rout signal **464** is generated whenever the signal sensed between electrodes **401** and **402** exceeds a sensing threshold defined by auto threshold circuit **416**. Further, the gain on amplifier **414** is adjusted by pacer timer and control circuitry **420**. The sense signal, for example, is used to set the timing windows and to align successive waveshape data for morphology detection purposes. For example, the sense event signal **464** may be routed through the pacer/timer control circuit **420** on bus **440** to processor **424** and may act as an interrupt for the processor **424** such that a particular routine of operations, e.g., morphology detection, discrimination functions, is commenced by processor **424**.

Switch matrix **412** is used to select available electrodes under control of processor **424** via data/address bus **440** such that the selection includes two electrodes employed as a far field electrode pair (i.e., widely spaced electrodes) in conjunction with a tachycardia/fibrillation discrimination function (e.g., a function to discriminate between tachycardia, i.e., an abnormally fast heart rate, and fibrillation, i.e., uncoordinated and irregular heartbeats, so as to apply an appropriate therapy). Far field EGM signals from the selected electrodes are passed through band pass amplifier **434** and into multiplexer **432**, where they are converted to digital data signals by analog to digital converter (ADC) **430** for storage in random access memory **426** under control of direct memory access circuitry **428**. For example, a series of EGM complexes for several seconds may be performed.

According to the present invention, the circuits shown in FIG. **10** are powered by an appropriate implantable battery supply voltage source **490** (e.g., a voltage source generally shown in FIGS. **1–7**). For the sake of clarity, the coupling of supply voltage source **490** to various circuits of the PCD **400** is not shown in the figures. Further, the circuits operable under control of a clock signal shown in FIG. **10** are operated according to the present invention under clock source **491**. For the sake of clarity, the coupling of such clock signals from the clock source **491** (e.g., a clock source generally shown in FIGS. **1–7**) to such CMOS, CML, SOS, SOI, BICMOS, PMOS and/or NMOS circuits of PCD **400** is not shown in the figures.

The occurrence of an R-wave sense event or detect signal Rout **464** is communicated to processor **424** to initiate morphology analysis on waveforms by processor **424** for use in selection of a therapy for heart **264**. For example, the processor may calculate the cumulative beat-to-beat variability of heart **264**, time intervals separating R-wave sense events, and various other functions as set out in numerous references including any of the references already listed herein and various other references with regard to implantable PCDs.

Other portions of the PCD **400** of FIG. **10** are dedicated to the provision of cardiac pacing, cardioversion, and defibrillation therapies. With regard to cardiac pacing, the pacer timing/control circuit **420** includes programmable digital counters which control the basic timing intervals associated with cardiac pacing, including the pacing escape intervals, the refractory periods during which sensed R-waves are ineffective to restart timing of escape intervals, etc. The durations of such intervals are typically determined by processor **424** and communicated to pacer timer/control circuit **420** via address/data bus **440**. Further, under control of processor **424**, pacer timing/control circuit also determines the amplitude of such cardiac pacing pulses and pace out circuit **421** provides such pulses to the heart.

In the event that a tachyarrhythmia (i.e., tachycardia) is detected, and an anti-tachyarrhythmia pacing therapy is desired, appropriate timing intervals for controlling generation of anti-tachycardia pacing therapies are loaded from processor **424** into pacer timing and control circuitry **420**. Similarly, in the event that generation of a cardioversion or defibrillation pulse is required, processor **424** employs the counters and timing and control circuitry **420** to control timing of such cardioversion and defibrillation pulses.

In response to detection of fibrillation or a tachycardia requiring a cardioversion pulse, processor **424** activates cardioversion/defibrillation control circuitry **454**, which initiates charging of the high voltage capacitors **456**, **458**, **460** and **462** via charging circuit **450** under control of high voltage charging line **452**. Thereafter, delivery of the timing of the defibrillation or cardioversion pulse is controlled by pacer timing/control circuitry **420**. Various embodiments of an appropriate system for delivering and synchronization of cardioversion and defibrillation pulses, and controlling the timing functions related to them is disclosed in more detail in U.S. Pat. No. 5,188,105 to Keimel, which is incorporated herein by reference in its entirety. Other such circuitry for controlling the timing and generation of cardioversion and defibrillation pulses is disclosed in U.S. Pat. No. 4,384,585 to Zipes, U.S. Pat. No. 4,949,719 to Pless et al., and in U.S. Pat. No. 4,375,817 to Engle et al., all incorporated herein by reference in their entireties. Further, known circuitry for controlling the timing and generation of anti-tachycardia pacing pulses is described in U.S. Pat. No. 4,577,633 to Berkovits et al., U.S. Pat. No. 4,880,005 to Pless et al., U.S. Pat. No. 4,726,380 to Vollmann et al., and U.S. Pat. No. 4,587,970 to Holley et al., all of which are incorporated herein by reference in their entireties.

Selection of a particular electrode configuration for delivery of the cardioversion or defibrillation pulses is controlled via output circuit **448** under control of cardioversion/defibrillation control circuit **454** via control bus **446**. Output circuit **448** determines which of the high voltage electrodes **406**,**408** and **410** will be employed in delivering the defibrillation or cardioversion pulse regimen.

The components of PCD **400** of FIG. **10** comprise CMOS, CML, SOS, SOI, BICMOS, PMOS and/or NMOS circuitry capable of operation according to the present invention include processor **424**, control circuits **420** and **454**, RAM **426**, DMA **428**, ADC **430**, and multiplexer **432**.

According to the present invention, pacemaker **300** illustrated in FIG. **9** and PCD **400** illustrated in FIG. **10** may both be implemented in accordance with the generalized embodiments previously described herein with reference to FIGS. **1–7**. First, for example, with respect to pacemaker **300** of FIG. **9**, voltage supply source **301** of pacemaker **300** may be implemented in a manner previously described with reference to FIGS. **1–7**. Likewise, clock source **338** of pacemaker **300** may be implemented in such a manner as described with reference to FIGS. **1–7**. Clock source **491** of PCD **400** of FIG. **10** and the voltage supply source **490** of PCD **400** of FIG. **10** may be implemented in accordance with the generalized embodiments previously described herein with reference to FIGS. **1–7**.

As one illustrative example, ADC/Mux **342**, RF transmitter/receiver **336**, digital controller timer circuit **332**, and various other CMOS, CML, SOS, SOI, BICMOS, PMOS and/or NMOS circuits may be individually operated at different clock frequencies available from clock source **338**. Likewise, such circuits may be operated at corresponding supply voltages which may be different for each of the

circuits. Moreover, RF transmitter/receiver **336** may be operated during a particular time period (e.g., when uplinking) at a particular clock frequency available from clock source **338** and at a particular supply voltage available from voltage supply source **301** corresponding to the particular clock frequency. On the other hand, during a different time period (e.g., during downlink), circuit **336** may be operated at a completely different clock frequency and supply voltage. Automatic adjustment of telemetry parameters under certain circumstances is described in U.S. Pat. No. 5,683,432 to Goedeke et al., hereby incorporated by reference herein in its entirety.

In respect of FIG. **10**, A/D converter circuit **430**, cardioverter/defibrillator control circuit **454**, and various other circuits such as RAM **426**, DMA **428**, and multiplexer **432** may also be operated at different clock frequencies available from clock source **491** and at different corresponding supply voltages available from supply voltage source **490**. A telemetry circuit (not shown in the Figures) may be employed with PCD **400** of FIG. **10** and may also be operated at different clock frequencies available from clock source **491** and at different corresponding supply voltages available from supply voltage source **490**. Additionally, processor **424** may be operated at different clock speeds, depending upon the function being performed by processor **424** (such as described with reference to FIG. **7**). Morphology detection sensing at typical physiologic rates (i.e., 50 to 150 BPM), for example, may be performed at a first clock frequency and corresponding supply voltage while arrhythmia detection may be performed at a different clock frequency and corresponding supply voltage. FIG. **11** shows variable clock/variable supply voltage digital signal processing (DSP) system **500** which may be employed in conjunction with and/or in the alternative to certain circuits shown in FIGS. **9** and **10**. DSP system **500** according to FIG. **11**, for example, may be employed in place of activity circuit **352**, pressure circuit **354**, sense amplifier circuit **346** (for P-wave, R-wave- and/or T-wave sense amplifiers), and further may be provided with additional functionality with use of pseudo EKG signal **502**. Generally, any number of analog signals **499**, for example, such as pseudo EKG signals **502**, activity sensor signal **503** and pressure and onset sensor signal **504**, are provided through respective amplifiers **505–507**. The amplified signals are presented to multiplexer **510** which provides them to analog to digital converter (ADC) **516** of the digital signal processing system **500** in a cycled fashion.

Signals **502–504** may be cycled at different rates by cycling through the outputs of the several amplifiers/preamplifiers **505–507** such as described in pending U.S. patent application Ser. No. 08/801,335, Medtronic Docket No. P-4521, entitled "Method for Compressing Digitized Cardiac Signals Combining Lossless Compression and Nonlinear Sampling," which describes variable compression via ADC sampling and which is incorporated herein by reference in its entirety. The ADC may also have variable conversion rates as described in U.S. Pat. No. 5,263,486 and U.S. Pat. No. 5,312,446, incorporated by reference herein in their respective entireties.

Input/output interface **514** and program registers **512** are utilized under control of a timing circuit (not shown) to control application of the analog signals from multiplexer **510** to ADC **516** of the DSP system **500** which provides such converted digital signals to digital filter **518** to provide a waveform for analysis to waveform analysis processor **520** (i.e., a digital signal processor (DSP)) of system **500**. To reduce power, the waveform analysis (DSP) processor **520** is clocked at different speeds, i.e., controlled "on the fly," according to the present invention, depending upon the processing needs.

Only during a QRS complex, for example, does waveform analysis processor **520** operate in a high speed processing mode at a relatively high frequency. During the remainder of the cardiac cycle the DSP processor **520** may be "idling along" at a much lower clock frequency. Such a processing cycle has been previously described with reference to FIG. **4**C. In addition to the lower clock speed utilized for different portions of the cardiac cycle, one skilled in the art will recognize that in accordance with the other aspects of the present invention, as the speed is reduced, the supply voltage level (V_{DD}) may also be reduced accordingly. Thus, the objective of reduced power consumption is realized.

DSP system **500** of FIG. **11** is generally shown in FIG. **12**. Generally, DSP systems, such as DSP system **500**, may include an input filter, an ADC, a sample and hold circuit (sometimes built into the ADC), and a digital signal processor to provide an output. The input filter, ADC, and sample and hold circuit provide data representative of an analog input to the processor. The digital signal processor can then be used to implement one of various algorithms, such as, for example, digital filtering, mapping the input, performing morphology detection, functioning as sense amplifiers (P-wave, R-wave, or T-wave), etc., to provide a desired output.

As used in a medical device described herein, the output of DSP system **500** is generally provided to a controller in digital form. Such a digital output resulting from digital processing may, however, be converted back into an analog output using components common to DSP systems such as a digital to analog (DAC) converter, output filters, etc. One skilled in the art will recognize that depending upon the application of the present invention, the components of DSP system **500** may vary. For example, one DSP system may include a DAC to provide an analog output, while another such system may not.

As shown in FIG. **12**, two or more analog input signals **499** are multiplexed by multiplexer **510** and converted to digital data representative thereof for processing by the digital signal processor of DSP system **500**. The data representative of the input signals is then operated upon by the digital signal processor of DSP system **500** to perform functions with regard thereto during a predetermined period of time. R-wave detection algorithms and P-wave detection algorithms may be performed, for example, by the same digital signal processor during the predetermined time period using data representative of ventricular and atrial analog input signals, respectively, provided to the multiplexer **510**.

Such multiplexing of the input signals and use of a single digital signal processor as shown in FIGS. **11** and **12** to perform multiple functions in a predetermined period of time requires the digital signal processor of the DSP system **500** to be operated at a relatively high clock frequency. The clock frequency is relatively high compared to the clock frequencies that would be required if multiple digital signal processors were used to perform the functions in the same time period. With operation at a relatively high frequency to accomplish the multiple functions during this predetermined period of time, a relatively high supply voltage must also be applied to the processor for operation.

The supply voltage is relatively high compared to the supply voltage that would be required if multiple digital signal processors were used to perform the functions in the same time period. As such, the dynamic power (P) con-

sumed by the single digital signal processor ((P)=½CV_{DD}^2F, where C is nodal capacitance, F is the clock or switching frequency, and V_{DD} is the supply voltage for the processor) is rather high. The formula for calculating dynamic power (P) indicates that dynamic power consumption of CMOS, CML, SOS, SOI, BICMOS, PMOS and/or NMOS circuits is proportional to the square of the supply voltage (V_{DD}). In addition, the dynamic power (P) is proportional to the switching or clock frequency (F). As described below, the same multiple functions as performed above using a single DSP system can be accomplished using multiple DSP systems operating at lower clock frequencies and lower supply voltages to reduce power consumption.

FIG. **13** shows a generalized schematic illustration of such a multiple processor system **600** including multiple DSP systems **602–604** for reducing power consumption according to the present invention. DSP system **602** is provided with a first analog input signal **612** and includes conversion circuitry for converting the analog input signal **612** to digital data representative thereof. Digital signal processor **622** of the DSP system **602** then operates on the data to perform a function and provide an output **632** (which may be converted back to an analog signal if desired). The digital signal processor **622** is operated at a first clock frequency Clk**1** and a first supply voltage SV**1** is applied to the digital signal processor **622**.

DSP system **603** is provided with a second analog input signal **613** and includes conversion circuitry for converting the analog input signal **613** to digital data representative thereof. Digital signal processor **623** of the DSP system **603** then operates on the data to perform a function and provide an output **633** (which may be converted back to an analog signal if desired). The digital signal processor **623** is operated at a second clock frequency Clk**2** and a second supply voltage SV**2** is applied to the digital signal processor **623**.

Generally, the first and second clock frequencies Clk**1** and Clk**2** at which the first and second digital signal processors operate to perform their respective functions in a predetermined time period, are lower relative to the clock frequency necessary for a single processor to perform the same functions in the same predetermined time period. The first and second clock frequencies Clk**1** and Clk**2** are such that the power consumed by the first and second digital signal processors in performance of the respective functions during the predetermined period of time is less than the power that would be consumed if only one of the first and second digital signal processors were to perform both the respective functions within the predetermined time period.

Likewise, supply voltage SV**1** and SV**2** may also be reduced because the digital signal processors **622** and **623** are running at a lower speed and a decrease in clock frequency allows use of lower supply voltages as previously described herein. If the clock frequency Clk**1** is reduced, for example, SV**1** applied to the digital signal processor **622** may also be reduced.

By way of example, consider the case in which system **600** includes only DSP system **602** and DSP system **603**. Each of DSP systems **602** and **603** receives a single analog input **612** and **613**, respectively. Digital signal processor **622** operates on the data representative of analog input **612** at clock frequency Clk**1** to perform a first function. Digital signal processor **623** operates on the data representative of the analog input **613** at clock frequency Clk**2** to perform a second function. In comparison to the power consumed by a system such as that shown in FIG. **12** (where a single processor is used to perform both the functions within the predetermined period of time using multiplexed inputs), multiple digital signal processors may perform the same functions, but while consuming substantially less power.

More particularly, by using two digital signal processors in accordance with the present invention, the dynamic power so consumed (P2) may be computed by the formula:

$$(P2)=\tfrac{1}{2}(2C)(V_{DD}/2)^2(F/2)$$

where C is two times the nodal capacitance because there are two digital signal processors, F/**2** is the reduced clock or switching frequency because both the digital signal processors can operate at ½ the speed as compared to a single processor attempting to complete both functions in the predetermined period of time, and V_{DD}/**2** is the supply voltage because the digital signal processors are running at ½ speed as compared to the single processor attempting to complete both functions in the predetermined time period.

Power consumed by the two digital signal processors illustration is given by the formula:

$$P2=\tfrac{1}{2}C(V_{DD}^2/4)F$$

which is ¼ the power consumed by the single processor using multiplexed inputs as described above in respect of FIG. **12**. One skilled in the art will now recognize that the foregoing two digital signal processor embodiment of the present invention occupies more integrated circuit die area than a single processor having multiplexed inputs. Power consumption is greatly reduced, however.

In the illustrative embodiment described above, the clock frequencies at which the first and second digital signal processors operate are substantially equal. Those clock frequencies need not be the same or substantially the same, however, to reduce power consumption, and indeed may be different. The first and second clock frequencies Clk**1** and Clk**2** at which the first and second digital signal processors operate to perform the respective functions are most preferably frequencies selected such that the power consumed by the first and second digital signal processors in performance of the respective functions during the predetermined period of time is less than the power that would be consumed if only one of the first and second digital signal processors were to perform both of the functions within the predetermined time period.

Moreover, and as shown in FIG. **13**, more than two DSP systems, such as additional DSP system **604**, may be employed to reduce power consumption. Additionally, each of the digital signal processors, including DSP systems **602–604**, may be provided with one or more analog inputs as represented generally by inputs **618** which may be multiplexed as described with respect to FIG. **11**, or alternatively may be provided with a single input as shown above with respect to DSP systems **602** and **603**.

Use of multiple DSP systems is particularly beneficial when processing higher frequency analog signals, although such systems may be employed with any analog signal. Such multiple DSP configurations find particularly advantageous application, for example, when employed for P-wave, R-wave, and T-wave sensing, EMI detection, sensor signal processing of such signals as pressure, oxygen saturation, blood flow and cardiac contractility signals, telemetry functions, and the like. Such functions may be characterized generally by the bandwidth of the analog signals being processed to perform such functions. In general, the bandwidth of analog signals such as cardiac sense signals is in the range of between about 10 Hz and about 100 Hz (as opposed to some sensor signals, such as pressure signals, having a bandwidth of between about 1 Hz and about 10 Hz).

FIGS. **14** and **15** illustrate the use of multiple DSP systems to perform multiple functions required for operation of a cardiac pacemaker. FIG. **14** shows some components conventionally used in a cardiac pacemaker such as that described in U.S. Pat. No. 5,387,228 to Shelton, entitled "Cardiac Pacemaker With Programmable Output Pulse Amplitude and Method," issued Feb. 7, 1995. For simplicity, other components of the pacemaker, such as those previously described herein and which are also described in other documents referenced herein such as in U.S. Pat. No. 5,387,228, are not described in further detail.

Referring again to FIG. **14**, digital controller/timer circuit **731** is coupled to sensing circuitry including sense amplifier circuit **738** and a sensitivity control circuit **739**. More particularly, digital controller/timer circuit **731** receives an A-event (atrial event) signal on line **740**, and a V-event (ventricular event) signal on line **741**. Sense amplifier circuit **738** is coupled to leads **714** and **715** and receives V-Sense (ventricular sense) and A-Sense (atrial sense) signals from heart **764**. Sense amplifier circuit **738** asserts the A-event signal on line **40** when an atrial event (i.e., a paced or intrinsic atrial event) is detected, and asserts the V-event signal on line **741** when a ventricular event (paced or intrinsic) is detected. Sense amplifier circuit **738** includes one or more sense amplifiers corresponding, for example, to that disclosed in U.S. Pat. No. 4,379,459 to Stein. Sensitivity control circuit **739** is provided to adjust the gain of sense amplifier circuit **738** in accordance with programmed sensitivity settings, as will be appreciated by those skilled in art of pacing.

Ventricular electrocardiogram amplifier **742** is coupled to a conductor in lead **714** to receive a V-sense signal from heart **764**. Similarly, atrial electrocardiogram amplifier **743** is coupled to one conductor of lead **715** to receive the A-sense signal from heart **764**. The electrocardiogram signals developed by amplifiers **742** and **743** are used on those occasions when the implanted device is being interrogated by an external programmer for uplink telemetry.

FIG. **15** shows an embodiment of multiple DSP system **800** in accordance with the present invention for replacing sensing circuitry **738** shown in FIG. **14**. Multiple DSP system **800** includes two DSP systems **801** and **803**. DSP system **801** includes a digital signal processor **841** which operates on data representative of the A-sense signal **805** originating from the atrium of the heart. Further, DSP system **803** includes a digital signal processor **842** which operates on data representative of the V-sense signal **807** originating from the ventricle of the heart. By way of example of the present invention, digital signal processor **841** detects when an atrial event (P-wave detection) occurs using the data representative of the A-sense signal during a predetermined period of time. In another example of the present invention, digital signal processor **843** detects when an ventricular event (R-wave detection) occurs using the data representative of the V-sense signal during the predetermined period of time.

As shown in FIG. **15**, the digital signal processors operate at clock frequencies that are ½ of the clock frequency necessary for operation of a single digital signal processor (assuming the corresponding single digital signal processor receives, via a multiplexer, both A-sense and V-sense signals and performs both the atrial and ventricular detection functions during the predetermined period of time). As such, and as described above in the general two digital signal processor illustration, the power so consumed is substantially reduced using the two digital signal processors for performing the respective functions within the predetermined period of time in respect of the power that would otherwise be required for a single processor to perform the same functions during the same time period.

Additionally, and as described above, the supply voltage may also be reduced because the digital signal processors are running at ½ speed and a decrease in clock frequency permits use of lower supply voltages. Power consumption is reduced because power the consumed is directly proportional to the square of the supply voltage. If the clock frequency of the digital signal processors is reduced in half, for example, relative to a single processor embodiment using multiplexed inputs, the supply voltage may also be reduced in half relative in respect of the supply voltage employed in a single processor embodiment.

Upon detecting an atrial event, DSP system **801** provides an A-event signal at output **811**. Upon detecting a ventricular event, DSP system **803** provides a V-event signal at output **813**. The sense amplifier functions illustrated in FIG. **14** are therefore accomplished using the two DSP system embodiment of the present invention shown in FIG. **15**, with a corresponding reduction in power consumption in respect of the use of a single DSP system to accomplish the same functions (such as those illustrated in FIG. **12**).

Those skilled in the art will recognize that other signals may be processed according to the present invention with the same or additional digital signal processors and/or systems. For example, such DSP systems may be used for T-wave detection, oxygen sensor data analysis, pressure sensor data analysis, cardiac contractility data analysis, EMI detection, or for processing and analyzing any other signals or data sets may benefit from the use of digital signal processing.

The present invention is compatible with various fabrication technologies such as silicon on insulator (SOI), silicon on sapphire (SOS), current mode logic (CML), BICMOS, PMOS and NMOS CMOS technologies, as well as to conventional silicon CMOS technologies. The present invention as described herein is enabling technology in respect of the employment of multiple DSP systems to perform more functions and computations due to the manner in which power consumption may be reduced for such multiple DSP systems. Moreover, multiple processor based designs may also be implemented in accordance with the present invention due to reduced power consumption resulting from supply voltages and clocking frequencies being reduced for various functions and computations performed by the processors.

Additionally, as power consumption is reduced, further functionality may be added to devices in accordance with the present invention to provide a device having added functionality yet lower or the same power consumption relative to conventional prior art devices. A processor in accordance with the present invention may perform, for example, various morphology detection functions such as differentiation of retrograde P-waves and antegrade P-waves of EGM waveform; differentiation of P-waves from far field R-waves; differentiation of AF-A flutter-AT from sinus tachycardia; differentiation of VT-VF-V flutter from SVT; differentiation of cardiac signals from electromagnetic interference; etc. Also by way of example, various embodiments of the present invention may also be employed to detect or filter out electromagnetic interference (EMI) emanating from or generated by theft detectors, conductive signals, RF noise, myopotentials, and the like.

FIG. **16** is a general schematic block diagram of device **600** including analog circuitry **602** and digital circuitry **604** (including clock circuit **605**). The digital circuitry (e.g.,

CMOS, CML, SOS, SOI, BICMOS, PMOS and/or NMOS technology) has a fixed supply voltage ($V_{digital}$) applied thereto from power source **608**, which may be any type of electrochemical cell or battery suitable for use in an implantable medical device and providing an appropriate supply voltage. Some examples of batteries or cells finding application in respect of the present invention include, but are not limited to, lithium iodine, lithium manganese, nickel cadmium, nickel metal hydride, zinc manganese oxide, zinc silver oxide, zinc mercuric oxide, lithium silver vanadium oxide, lithium ion, divalent silver oxide and silver oxide electrochemical cells and batteries. At least some of the foregoing chemical systems may require stepping down of voltage for use in certain embodiments of the present invention.

Fixed supply voltage $V_{digital}$ applied for operation of the digital circuitry is kept low to reduce power consumption as previously described herein. Power consumed by the CMOS, CML, SOS, SOI, BICMOS, PMOS and/or NMOS circuitry, for example, is proportional to the square of the supply voltage. Therefore, a lower supply voltage is necessary to reduce power consumption.

Particularly for implantable devices, however, designing analog circuitry **602** to function at such low supply voltages is difficult due to various considerations, such as small circuit headroom, small signal amplitudes (which may effectively reduce amplifier sensitivity), small signal-to-noise ratios, reduced common mode rejection ratios (CMRR), reduced transmitted telemetry power, voltage regulation and current source problems, and so on.

As such, in accordance with the present invention, device **600** further most preferably includes voltage generator circuit **606** to generate at least one fixed supply voltage (V_{analog}) for application to analog circuitry **602**. Voltage generator circuit **606** is supplied with supply voltage $V_{digital}$ to generate supply V_{analog}. Voltage generator circuit **606** may generate any number of predetermined or fixed voltages greater than $V_{digital}$ to supply different analog circuits. For example, output circuits may require a larger voltage than other amplification circuits. Voltage generator circuit **606** will generate both +/− supplies (V_{DD} and V_{SS}) to power only the analog circuitry **602**.

Digital circuitry **604** is supplied with the lower voltage $V_{digital}$. For example, as contemplated in the present invention, lower fixed or predetermined supply voltage $V_{digital}$ is in the range of about 1.1 to 1.5 volts at beginning-of-life (BOL) and about 0.8 volts to about 1.0 volts at end-of-life (EOL). The generated fixed supply voltage V_{analog} is in the range of about +/−2.0 volts to about +/−3.0 volts.

Level shifter **610** may be used to translate logic and/or control signals between the analog circuitry **602** and the digital circuitry **604**. Such level shifting may be required due to the difference in supply voltage being applied to the respective digital circuitry **604** and analog circuitry **602**.

As described previously above, with reduction in supply voltage (V_{DD}), threshold voltage (V_T) for the circuits is also reduced. With use of lower threshold levels due to lower supply voltages, static power consumption losses undesirably increase by several orders of magnitude. A back gate bias source **609** may therefore be used to provide back gate bias voltages to digital circuitry **604**. In this manner, static leakage current losses can be minimized because the equivalent higher threshold voltage has been restored. The back gate bias voltage may be provided by, for example, a fixed voltage source (e.g., a charge pump) connected to the back gate well via a contact. Alternatively, an active body bias scheme whereby the voltage source is selectable or adjustable over an appropriate range may be used. Back gate voltages may be applied in any known manner, such as those previously described herein.

FIG. **17** is a more detailed schematic block diagram of one embodiment of pacemaker **700** much like that shown in FIG. **9**. According to the present invention, a lower supply voltage V1 (e.g., 1.1 volt source **710**) is applied to digital circuitry **702** of pacemaker **700** with charge pump circuit **706** being used to generate at least one higher supply voltage V2 (e.g., 3.0 volts) to be applied to analog circuitry **704** of pacemaker **700**.

Digital circuitry **702** may, for example, include circuits such as those described above in reference to pacemaker **300** and FIG. **17**. Digital circuitry **702** may include, for example, controller/timer and processor circuit **714** (including a clock circuit **715**) or memory circuits such as RAM/ROM circuits **716** for communication with controller/timer and processor circuit **714**. Such components and functionality are described herein with reference to FIG. **9**.

Analog circuitry **704** may include the analog circuits of pacemaker **300** described previously in reference to FIG. **9**. Such analog circuits may include, for example, atrial and ventricular sense amplifiers for receiving A-sense signals from the atrium of heart **764** and for receiving V-sense signals from the ventricle of heart **764**. Such sense amplifier circuits are coupled to leads extending to heart **764** via capacitors C1 and C2 to receive the V-Sense (ventricular sense) and A-Sense (atrial sense) signals from heart **764**. Sense amplifier circuits then communicate an A-event signal to controller **714** when an atrial event (i.e., an intrinsic atrial event or P-wave) is detected, and communicate a V-event signal to controller **714** when a ventricular event (an intrinsic R-wave) is detected. Analog circuitry **704** may also include bandpass filters and detection circuitry to accomplish such detection. Moreover, analog circuitry **704** may include circuitry for T-wave detection, such as a T-wave amplifier, bandpass filter, or capture detection circuitry.

Analog circuitry **704** may include various other circuits, such as analog to digital converters (ADCs); voltage reference and current source circuits; telemetry transmission and reception circuitry; sensor amplification circuitry, and bandpass, detection, and drive circuitry to be used with such sensors (e.g., minute ventilation activity, pressure, temperature, pH, pCO2 or oxygen sensors); ECG amplifiers and bandpass filters, such as amplifiers for A-sense signals, V-sense signals and T-wave signals to be used for telemetry purposes; output circuits and pump circuits such as those described in U.S. Pat. No. 5,387,228 to Shelton; battery monitor circuits; power on reset circuits; and any circuits generally designed as analog circuits.

FIG. **18** shows an alternative embodiment for at least some of the analog circuitry **704** described in reference to FIG. **17**. The functions of some of the analog circuits, for example sense amplifiers, may be implemented using circuitry **780** which includes analog circuits **782** (e.g., preamplifiers, ADC's, etc.) and further includes one or more digital signal processors (DSPs) **784** to perform analysis with respect to data communicated thereto by way of analog circuits **782**. A similar illustrative implementation is described hereinabove in respect of FIG. **11**. As such, and according to the present invention as described in reference to FIGS. **16** through **18**, supply voltage V1 is applied to DSP(s) **784** while charge pumped voltage V2 is used as the supply voltage for analog circuits **782**.

Charge pump circuit **706** is used to generate both +/− voltage supplies (V_{DD} and VSS) to power analog circuitry **704**. Various configurations for charge pump circuit **706** may

be used. Charge pump circuit **706** may be implemented, for example, using the techniques described in U.S. Pat. No. 5,387,228 to Shelton. Charge pump circuit **706** may, for example, be regulated, such as with use of a charge comparator circuit to regulate the voltage, or charge pump circuit **706** may be unregulated. The unregulated voltage may vary as the voltage source **V1** varies due to low battery conditions, for example. Yet further, one or more supply voltages may be output from charge pump circuit **706** as voltage **V1** is pumped to different amplitudes. More than one supply voltage may be provided by charge pump circuit **706** or more than one charge pump circuit **706** may be employed to provide multiple supply voltages, where each charge pumped voltage is greater than supply voltage **V1**. That is, one charge pumped voltage may exceed another charged pumped voltage.

Supply voltages **V1** and **V2** described in reference to FIG. **17** (i.e., wherein different supply voltages are applied to analog circuitry and digital circuitry, respectively) are fixed predetermined voltages. In other words, pumped predetermined fixed voltage **V2** is applied to the analog circuits whenever they are in operation, as opposed to a pumped voltage being applied to circuits only when low battery conditions are apparent. Such voltages are determined at the time the circuits are designed and do not vary other than possibly when batteries have even lower states of charge.

Additionally, pacemaker **700** may include a level shifter **708**. Level shifter **708** may be used to translate logic and/or control signals between analog circuitry **704** and controller and processor **714**. Such level shifting may be required due to the difference in supply voltages being applied to digital circuitry **702** and analog circuitry **704**, respectively. Such a voltage level shifter may be implemented in various configurations. For example, illustrative voltage level shifters are described in U.S. Pat. No. 4,663,701, hereby incorporated by reference herein in its entirety.

Those skilled in the art will now recognize that the technique of applying a lower supply voltage to digital circuitry of a device having a relatively large charged pumped voltage applied to the analog circuitry thereof may be applicable to other medical or implantable devices in a manner similar to that described in reference to a pacemaker. Application of different voltages to the analog and digital circuitry of the PCD described hereinabove in respect of FIG. **10**, for example, may be employed to reduce power consumption.

Additionally, as power consumption is reduced, further functionality may be added to devices in accordance with the present invention to provide a device having added functionality and yet lower or the same power consumption relative to conventional prior art devices. A processor in accordance with the present invention may perform, for example, various morphology detection functions such as differentiation of retrograde P-waves and antegrade P-waves of EGM waveform; differentiation of P-waves from far field R-waves; differentiation of AF-A flutter-AT from sinus tachycardia; differentiation of VT-VF-V flutter from SVT; differentiation of cardiac signals from electromagnetic interference; etc. Also by way of example, various embodiments of the present invention may also be employed to detect or filter out electromagnetic interference (EMI) emanating from or generated by theft detectors, conductive signals, RF noise, myopotentials, and the like.

The preceding specific embodiments are illustrative of the practice of the invention. It is to be understood, therefore, that other expedients known to those skilled in the art or disclosed herein may be employed without departing from the invention or the scope of the appended claims. For example, the present invention is not limited to the use of any particular digital or analog circuits. Furthermore, the voltages applied need not be at any predefined level, but only need be different. Although a charge pump is preferred for generating the higher supply voltage described herein, there may be other voltage generation devices capable of generating the desired voltage levels for application to analog circuits. The present invention is also not limited to use in conjunction with pacemakers or PCDs, but may find further application in other relevant areas such as personal computing or telecommunications where low power consumption is desired. The present invention further includes within its scope the use of other techniques described herein in conjunction with the application of different supply voltages to analog and digital circuits (such as, for example, just-in-time clocking devices and methods).

The present invention is also not limited, for example, to the use of only two DSP systems, and DSP systems in accordance with the present invention may be used with other clock frequency management techniques described herein (such as multiple clock frequencies for more than one function performed by one of the multiple processors). Moreover, the supply voltage source used for the multiple DSP systems of the present invention may include not only discrete supply voltages, but may also include a source that is varied continuously over a particular range of voltages such as by a voltage regulator, with such voltages changed "on the fly" with corresponding clock frequencies. The present invention is further not limited to use in conjunction with pacemakers or PCDs, but may find further application in other relevant areas where low power consumption is desired, such as in the telecommunications and personal computing fields, for example. The present invention further includes within its scope methods of making and using the features, concepts and circuitry described hereinabove.

In the claims, means plus function clauses are intended to cover the structures described herein as performing the recited function and their equivalents. Means plus function clauses in the claims are not intended to be limited to structural equivalents only, but are also intended to include structures which function equivalently in the environment of the claimed combination.

I claim:

1. A method for conserving electrical power consumed by a medical device including one or more analog circuits and one or more digital circuits, the method comprising the steps of:

providing a first digital signal processor coupled to at least one of the one or more analog circuits of the medical device for receiving analog data representative of at least a first analog input;

operating on the analog data representative of the first analog input using the first digital signal processor to perform at least a first function during a predetermined time period, the first digital signal processor operating at a first clock frequency to perform the first function;

providing a second digital signal processor coupled to at least one of the one or more analog circuits of the medical device for receiving analog data representative of at least a second analog input;

operating of the analog data representative of the second analog input using the second digital signal processor to perform at least a second function during the predetermined time period, the second digital signal processor operating at a second clock frequency to perform the second function;

applying a first fixed supply voltage to the one or more digital circuits; and

generating a second fixed supply voltage for application to the one or more analog circuits using the first fixed supply voltage, wherein the second fixed supply voltage is greater than the first fixed supply voltage,

wherein the first and second clock frequencies are such that the power consumed by the first and second digital signal processors in performance of the first and second functions during the predetermined time period is less than the power that would be consumed if only one of the first and second digital signal processors were to perform both of the first and second functions within the predetermined time period.

2. The method of claim **1**, wherein the first and second clock frequencies are about equal.

3. The method of claim **1**, wherein the predetermined time period is a time period based on physiological events.

4. The method of claim **1**, wherein the data representative of first and second analog inputs are cardiac sense signals.

5. The method of claim **1**, wherein the method further includes applying a first supply voltage to the first digital signal processor based on the first clock frequency, and further includes applying a second supply voltage to the second digital signal processor based on the second clock frequency.

6. The method of claim **5**, wherein the first and second clock frequencies are about equal.

7. The method of claim **1**, wherein the medical device further includes one or more additional digital signal processors, each for receiving data representative of at least one analog signal provided by the one or more analog circuits and wherein the method further includes the step of operating on the data representative of the at least one analog input using the additional digital signal processor at an additional clock frequency to perform at least one additional function during the predetermined time period.

8. The method of claim **7**, wherein at least one of the first and second functions is selected from the group consisting of capture detection, R-wave detection, P-wave detection, T-wave detection, electromagnetic interference detection, oxygen saturation determination, pressure determination, sensor cardiac contractility determination, cardiac flow determination, telemetry reception and telemetry transmission.

9. The method of claim **1**, wherein the medical device is a hermetically sealed implantable medical device.

10. The method of claim **9**, wherein the implantable medical device providing step further comprises the step of providing an implantable medical device selected from the group consisting of an implantable stimulator, an implantable nerve stimulator, an implantable pacemaker, an IPG, an implantable cardioverter, an implantable PCD, an implantable defibrillator, an implantable ICD and an implantable drug pump.

11. The method of claim **1**, wherein the steps of providing the first and second digital processing systems further comprise the steps of providing circuitry for at least one of the first and second digital processing systems selected from the group consisting of CMOS circuits, CML circuits, SOS circuits, SOI circuits, BICMOS circuits, PMOS circuits and NMOS circuits.

12. The method of claim **1**, wherein the step of generating the second fixed supply voltage includes the step of generating the second fixed supply voltage using a charge pump circuit.

13. The method of claim **1**, wherein the first fixed supply voltage ranges between about 0.8 volts and about 1.5 volts.

14. The method of claim **1**, wherein the second fixed supply voltage ranges between about +/−2.0 volts and about +/−3.0 volts.

15. The method of claim **1**, wherein the method further includes the step of adjusting a back gate bias of at least one of the one or more digital circuits.

16. The method of claim **1**, wherein the step of providing the one or more digital circuits includes providing at least one of a processor, a controller and a memory.

17. The method of claim **1**, wherein the step of providing the one or more analog circuits includes the step of providing at least one of an atrial sense amplifier, a ventricular sense amplifier, a T-wave amplifier, one or more bandpass filters, one or more detection circuits, one or more sensor amplification circuits, one or more physiological signal amplification circuits, one or more output circuits, a battery monitor circuit, and a power on reset circuit.

18. The method of claim **1**, wherein the step of providing the one or more digital circuits includes the step of providing at least one digital signal processor having the first supply voltage applied thereto for receiving data representative of one or more analog signals.

19. The method of claim **1**, wherein the step of providing the one or more analog circuits includes the step of providing at least one amplifier circuit for amplifying the one or more analog signals.

20. The method of claim **1**, wherein the method further includes the steps of

communicating signals between the one or more analog circuit and the one or more digital circuits, and

translating voltage levels of signals being communicated between the one or more analog circuits and the one or more digital circuits.

21. A method of conserving electrical power in a medical device, the method comprising the steps of:

providing a first digital signal processor of the medical device receiving analog data representative of at least a first analog input;

applying a first supply voltage to the first digital signal processor for operation on the analog data representative of the at least first analog input to perform at least a first function during a predetermined time period;

providing a second digital signal processor of the medical device receiving analog data representative of at least a second analog input;

applying a second supply voltage to the second digital signal processor for operation on the analog data representative of the at least second analog input to perform at least a second function during the predetermined time period;

wherein the first and second supply voltages are such that the power consumed by the first and second digital signal processors in performance of the first and second functions is less than the power that would be consumed if only one of the first and second digital signal processors were to perform both of the first and second functions within the predetermined time period.

22. The method of claim **21**, wherein the method further includes operating the first and second digital signal processors at a first and second clock frequency, respectively, to control operation of the first and second digital signal processors during performance of the respective first and second functions, and further wherein the first and second clock frequencies are such that the power consumed by the first and second digital signal processors during performance of the first and second functions is less than the power that

would be consumed if only one of the first and second digital signal processors were to perform both of the first and second functions within the predetermined time period.

23. The method of claim **21**, wherein the first and second clock frequencies are about equal.

24. The method of claim **21**, wherein the predetermined time period is a time period based on physiological events.

25. The method of claim **21**, wherein the data representative of first and second analog inputs are cardiac sense signals.

26. The method of claim **22**, wherein the method further includes applying the first supply voltage to the first digital signal processor based on the first clock frequency, and further includes applying the second supply voltage to the second digital signal processor based on the second clock frequency.

27. The method of claim **26**, wherein the first and second clock frequencies are about equal.

28. The method of claim **21**, wherein the medical device further includes one or more additional digital signal processors to receive data representative of at least one analog input, and wherein the method further includes the step of operating on the data representative of the at least one analog input using the additional digital signal processor at an additional clock frequency to perform at least one additional function during the predetermined time period.

29. The method of claim **28**, wherein at least one of the first and second functions is selected from the group consisting of capture detection, R-wave detection, P-wave detection, T-wave detection, electromagnetic interference detection, oxygen saturation determination, pressure determination, sensor cardiac contractility determination, cardiac flow determination, telemetry reception and telemetry transmission.

30. The method of claim **21**, wherein the medical device is a hermetically sealed implantable medical device.

31. The method of claim **30**, wherein the implantable medical device providing step further comprises the step of providing an implantable medical device selected from the group consisting of an implantable stimulator, an implantable nerve stimulator, an implantable pacemaker, an IPG, an implantable cardioverter, an implantable PCD, an implantable defibrillator, an implantable ICD and an implantable drug pump.

32. The method of claim **31**, wherein the steps of providing the first and second digital processing systems further comprise the steps of providing circuitry for at least one of the first and second digital processing systems selected from the group consisting of CMOS circuits, CML circuits, SOS circuits, SOI circuits, BICMOS circuits, PMOS circuits and NMOS circuits.

33. The method of claim **31**, wherein the medical device includes one or more analog circuits to generate the data representative of at least the first and second analog inputs, a voltage source coupled to the one or more analog circuits, and one or more digital circuits coupled to the voltage source, and further including the methods of:

applying a first fixed supply voltage generated by the voltage source to the one or more digital circuits;

generating a second fixed supply voltage for application to the one or more analog circuits using the first fixed supply voltage.

34. The method of claim **33**, wherein the step of generating the second fixed supply voltage includes the step of generating the second fixed supply voltage using a charge pump circuit.

35. The method of claim **33**, wherein the first fixed supply voltage ranges between about 0.8 volts and about 1.5 volts.

36. The method of claim **33**, wherein the second fixed supply voltage ranges between about +/−2.0 volts and about +/−3.0 volts.

37. The method of claim **33**, wherein the method further includes the step of adjusting a back gate bias of at least one of the one or more digital circuits.

38. The method of claim **33**, wherein the step of providing the one or more digital circuits includes providing at least one of a processor, a controller and a memory.

39. The method of claim **33**, wherein the step of providing the one or more analog circuits includes the step of providing at least one of an atrial sense amplifier, a ventricular sense amplifier, a T-wave amplifier, one or more bandpass filters, one or more detection circuits, one or more sensor amplification circuits, one or more physiological signal amplification circuits, one or more output circuits, a battery monitor circuit, and a power on reset circuit.

40. The method of claim **33**, wherein the step of providing the one or more digital circuits includes the step of providing at least one additional digital signal processor having the first supply voltage applied thereto for receiving data representative of one or more analog signals.

41. The method of claim **33**, wherein the step of providing the one or more analog circuits includes the step of providing at least one amplifier circuit for amplifying the one or more analog signals.

42. The method of claim **33**, wherein the method further includes the steps of

communicating one or more signals between the one or more analog circuits and the one or more digital circuits, and

translating voltage levels of signals being communicated between the one or more analog circuits and the one or more digital circuits.

* * * * *