American National Standard

ANSI/AAMI EC13:2002/(R)2007

Cardiac monitors, heart rate meters, and alarms

AAMI

Association for the Advancement of Medical Instrumentation

Single user license only. Copying, networking, and distribution prohibited.

iRhythm, Inc. / Welch Allyn, Inc.
Exhibit 1030
Page 1

The Objectives and Uses of AAMI Standards and Recommended Practices

It is most important that the objectives and potential uses of an AAMI product standard or recommended practice are clearly understood. The objectives of AAMI's technical development program derive from AAMI's overall mission: the advancement of medical instrumentation. Essential to such advancement are (1) a continued increase in the safe and effective application of current technologies to patient care, and (2) the encouragement of new technologies. It is AAMI's view that standards and recommended practices can contribute significantly to the advancement of medical instrumentation, provided that they are drafted with attention to these objectives and provided that arbitrary and restrictive uses are avoided.

A voluntary *standard* for a *medical device* recommends to the manufacturer the information that should be provided with or on the product, basic safety and performance criteria that should be considered in qualifying the device for clinical use, and the measurement techniques that can be used to determine whether the device conforms with the safety and performance criteria and/or to compare the performance characteristics of different products. Some standards emphasize the information that should be provided with the device, including performance characteristics, instructions for use, warnings and precautions, and other data considered important in ensuring the safe and effective use of the device in the clinical environment. Recommending the disclosure of performance characteristics often necessitates the development of specialized test methods to facilitate uniformity in reporting; reaching consensus on these tests can represent a considerable part of committee work. When a drafting committee determines that clinical concerns warrant the establishment of *minimum* safety and performance criteria, referee tests must be provided and the reasons for establishing the criteria must be documented in the rationale.

A *recommended practice* provides guidelines for the use, care, and/or processing of a medical device or system. A recommended practice does not address device performance *per se*, but rather procedures and practices that will help ensure that a device is used safely and effectively and that its performance will be maintained.

Although a device standard is primarily directed to the manufacturer, it may also be of value to the potential purchaser or user of the device as a fume of reference for device evaluation. Similarly, even though a recommended practice is usually oriented towards health care professionals, it may be useful to the manufacturer in better understanding the environment in which a medical device will be used. Also, some recommended practices, while not addressing device performance criteria, provide guidelines to industrial personnel on such subjects as sterilization processing, methods of collecting data to establish safety and efficacy, human engineering, and other processing or evaluation techniques; such guidelines may be useful to health care professionals in understanding industrial practices.

In determining whether an AAMI standard or recommended practice is relevant to the specific needs of a potential user of the document, several important concepts must be recognized:

All AAMI standards and recommended practices are *voluntary* (unless, of course, they are adopted by government regulatory or procurement authorities). The application of a standard or recommended practice is solely within the discretion and professional judgment of the user of the document.

Each AAMI standard or recommended practice reflects the collective expertise of a committee of health care professionals and industrial representatives, whose work has been reviewed nationally (and sometimes internationally). As such, the consensus recommendations embodied in a standard or recommended practice are intended to respond to clinical needs and, ultimately, to help ensure patient safety. A standard or recommended practice is limited, however, in the sense that it responds generally to perceived risks and conditions that may not always be relevant to specific situations. A standard or recommended practice is an important *reference* in responsible decision-making, but it should never *replace* responsible decisionmaking.

Despite periodic review and revision (at least once every five years), a standard or recommended practice is necessarily a static document applied to a dynamic technology. Therefore, a standards user must carefully review the reasons why the document was initially developed and the specific rationale for each of its provisions. This review will reveal whether the document remains relevant to the specific needs of the user.

Particular care should be taken in applying a product standard to existing devices and equipment, and in applying a recommended practice to current procedures and practices. While observed or potential risks with existing equipment typically form the basis for the safety and performance criteria defined in a standard, professional judgment must be used in applying these criteria to existing equipment. No single source of information will serve to identify a particular product as "unsafe". A voluntary standard can be used as one resource, but the ultimate decision as to product safety and efficacy must take into account the specifics of its utilization and, of course, cost-benefit considerations. Similarly, a recommended practice should be analyzed in the context of the specific needs and resources of the individual institution or firm. Again, the rationale accompanying each AAMI standard and recommended practice is an excellent guide to the reasoning and data underlying its provision.

In summary, a standard or recommended practice is truly useful only when it is used in conjunction with other sources of information and policy guidance and in the context of professional experience and judgment.

INTERPRETATIONS OF AAMI STANDARDS AND RECOMMENDED PRACTICES

Requests for interpretations of AAMI standards and recommended practices must be made in writing, to the Manager for Technical Development. An official interpretation must be approved by letter ballot of the originating committee and subsequently reviewed and approved by the AAMI Standards Board. The interpretation will become official and representation of the Association only upon exhaustion of any appeals and upon publication of notice of interpretation in the "Standards Monitor" section of the *AAMI News*. The Association for the Advancement of Medical Instrumentation disclaims responsibility for any characterization or explanation of a standard or recommended practice which has not been developed and communicated in accordance with this procedure and which is not published, by appropriate notice, as an *official interpretation* in the *AAMI News*.

Single user license only. Copying, networking, and distribution prohibited.

American National Standard

ANSI/AAMI EC13:2002/(R)2007
(Revision of ANSI/AAMI EC13:1992)
Corrected Copy: 25 February 2008

Cardiac monitors, heart rate meters, and alarms

Developed by
Association for the Advancement of Medical Instrumentation

Approved 6 May 2002 by
American National Standards Institute, Inc.

Abstract: This American National Standard establishes minimum safety and performance requirements for cardiac monitors, heart rate meters, and alarms that are used to acquire and/or display electrocardiographic signals with the primary purpose of continuous detection of cardiac rhythm.

Keywords: diagnostic, ECG, electromedical equipment, heart rate, medical electrical equipment, monitoring, waveform

Single user license only. Copying, networking, and distribution prohibited.

AAMI Standard

This Association for the Advancement of Medical Instrumentation (AAMI) standard implies a consensus of those substantially concerned with its scope and provisions. The existence of an AAMI standard does not in any respect preclude anyone, whether they have approved the standard or not, from manufacturing, marketing, purchasing, or using products, processes, or procedures not conforming to the standard. AAMI standards are subject to periodic review, and users are cautioned to obtain the latest editions.

CAUTION NOTICE: This AAMI standard may be revised or withdrawn at any time. AAMI procedures require that action be taken to reaffirm, revise, or withdraw this standard no later than five years from the date of publication. Interested parties may obtain current information on all AAMI standards by calling or writing AAMI.

All AAMI standards, recommended practices, technical information reports, and other types of technical documents developed by AAMI are *voluntary*, and their application is solely within the discretion and professional judgment of the user of the document. Occasionally, voluntary technical documents are adopted by government regulatory agencies or procurement authorities, in which case the adopting agency is responsible for enforcement of its rules and regulations.

Published by

Association for the Advancement of Medical Instrumentation
1110 N. Glebe Road, Suite 220
Arlington, VA 22201-4795
www.aami.org

© 2002 by the Association for the Advancement of Medical Instrumentation

All Rights Reserved

Publication, reproduction, photocopying, storage, or transmission, electronically or otherwise, of all or any part of this document without the prior written permission of the Association for the Advancement of Medical Instrumentation is strictly prohibited by law. It is illegal under federal law (17 U.S.C. § 101, *et seq*.) to make copies of all or any part of this document (whether internally or externally) without the prior written permission of the Association for the Advancement of Medical Instrumentation. Violators risk legal action, including civil and criminal penalties, and damages of $100,000 per offense. For permission regarding the use of all or any part of this document, contact AAMI at 1110 N. Glebe Road, Suite 220, Arlington, VA 22201-4795. Phone: (703) 525-4890; Fax: (703) 525-1067.

Printed in the United States of America

ISBN 1–57020–174–9

Single user license only. Copying, networking, and distribution prohibited.

Contents

Page

Committee representation v

Foreword vi

1 Scope 1

1.1 Inclusions 1
1.2 Exclusions 1
1.3 Differences in monitors 2

2 Normative references 2

3 Definitions 2

4 Requirements 4

4.1 Labeling requirements 4
4.1.1 Device markings 4
4.1.2 Operator manual 6
4.1.3 Service manual 8
4.1.4 Pacemaker pulse rejection capability 9
4.1.5 Summary 10
4.2 Performance requirements 11
4.2.1 Operating conditions 11
4.2.2 Overload protection 12
4.2.3 Leakage current 12
4.2.4 Auxiliary output 12
4.2.5 Respiration, leads-off sensing, and active noise suppression 12
4.2.6 QRS detection 12
4.2.7 Range and accuracy of heart rate meter 13
4.2.8 Alarm system 13
4.2.9 Special requirements for monitors with ECG waveform display capability 14
4.2.10 Electromagnetic compatibility 17
4.2.11 Summary 18

5 Test methods 22

5.1 Compliance with the labeling requirements 23
5.1.1 Device markings 23
5.1.2 Operator manual 23
5.1.3 Service manual 27
5.1.4 Pacemaker pulse rejection capability 27
5.2 Compliance with the performance requirements 30
5.2.1 Operating conditions 30
5.2.2 Overload protection 30
5.2.3 Leakage current 34
5.2.4 Auxiliary output 34
5.2.5 Respiration, leads-off sensing, and active noise suppression 34
5.2.6 QRS detection 34
5.2.7 Range and accuracy of heart rate meter 35
5.2.8 Alarm system 36
5.2.9 Special requirements for monitors with ECG waveform display capability 37
5.2.10 Electromagnetic compatibility 46

Annexes

A Rationale for the development and provisions of this standard 48

B Cited references and bibliography 68

Single user license only. Copying, networking, and distribution prohibited.

C CMR test fixture design and application notes 70

D Pacer pulse shaper test circuit and notes 77

Tables

1 Patient electrode connection definitions and color code 6

2 Summary of labeling/disclosure requirements 10

3 Frequency response 16

4 Summary of performance requirements 18

5 Lead combinations and number of defibrillator discharge tests 32

6 Patient electrode connections for pacemaker pulse display test 38

A.1 Extreme expected values of impedance (1 electrode) for a typical population 61

Figures

1 Triangular wave signal (for method B) 16

2 Test waveforms for T-wave rejection capability 24

3 Test waveforms for verifying heart rate accuracy 25

4 Test waveforms for ventricular tachycardia (modified from Lindsay and Budkin, 1970) 26

5 Pacemaker pulse test waveforms 28

6 Test signal simulating the QRS complex of the ECG 29

7 Example of time and amplitude measurement 29

8 General test circuit 30

9A Test circuit for defibrillator overload tests (5.2.2.2.1 and 5.2.2.2.2) 33

9B Test circuit for operator safety test (5.2.2.2.3) 33

10 Test circuit for evaluating internal noise and common mode 42

11 Pacemaker overload test circuit 43

12 Electrosurgery test setup 44

13A Electrosurgery overload test circuit 45

13B Electrosurgery suppression test circuit 46

A.1 Equivalent circuits for defibrillator discharge 56

C.1 CMR test: Line-powered supply and buffer 74

C.2 CMR test: Generator-powered buffer 74

C.3 Expanded offset capability, CMR fixture 75

D.1 Pacer pulse shaper circuit 78

Single user license only. Copying, networking, and distribution prohibited.

Committee representation

Association for the Advancement of Medical Instrumentation

Electrocardiograph Committee

This standard was developed by the AAMI Cardiac Monitor and Diagnostic ECG Working Group under the auspices of the AAMI Electrocardiograph Committee. Committee approval of the standard does not necessarily imply that all committee and working group members voted for its approval.

At the time this document was published, the **AAMI Electrocardiograph Committee** had the following members:

Cochairs:	James J. Bailey, MD
	David Mortara, PhD
Members:	James J. Bailey, MD, National Institutes of Health
	David L. Daly, U.S. Food and Drug Administration
	Arthur R. Eddy, Jr., ConMed Corp.
	Stacy Gehman, Agilent Technologies/Heartstream
	Paul Lander, FlowMetrix, Inc.
	George Moody, Massachusetts Institute of Technology
	David Mortara, PhD, Mortara Instruments
	Shankara Reddy, PhD, G.E. Medical Systems
	Jonathan Steinberg, MD, St. Luke's Roosevelt Hospital
	Roy D. Wallen, PurePulse Technologies
Alternate:	Robert Cangelosi, U.S. Food and Drug Administration

At the time this document was published, the **AAMI Cardiac Monitor and Diagnostic ECG Working Group** had the following members:

Chair:	Shankara Reddy, PhD
Members:	Robert William Bain, CBET, Prince George's Hospital
	Richard Diefes, ECRI
	Melvin N. Fink, Service Master
	David Geraghty, Micro Surgical Technology
	David Hernke, G.E. Medical Systems
	Charles Ho, Ph.D., U.S. Food and Drug Administration
	Cindy Jayne, Medtronic Physio-Control
	Michael Kronstadt, Abbott Laboratories
	Don Lin, PhD, Cardiac Science, Inc.
	William Murray, Siemens Medical Solutions U.S.A.
	Cadathur Rajagopalan, PhD, Datascope Corp.
	Shankara Reddy, PhD, G.E. Medical Systems
	Kay Rutishauser, RN, American Association of Critical Care Nurses
	Katherine Stankus, Spacelabs Medical
	Richard Sunderland, Welch Allyn Protocol, Inc.
	John Wang, Philips Medical Systems
Alternates:	George Diller, Philips Medical Systems
	Michael Gusel, Datascope Corp.
	Charles Sidebottom, Medtronic, Inc.
	John Sperinde, PhD, Abbott Laboratories
	Kenneth Takaki, U.S. Food and Drug Administration

NOTE—Participation by federal agency representatives in the development of this standard does not constitute endorsement by the federal government or any of its agencies.

Single user license only. Copying, networking, and distribution prohibited.

iRhythm, Inc. / Welch Allyn, Inc.
Exhibit 1030
Page 7

Foreword

This is the third edition of the American National Standard, *Cardiac monitors, heart rate meters, and alarms*. The first edition of the standard, which was approved in August 1984, was based on the second draft of a standard for cardiac monitors, heart rate meters, and alarms that was developed by the UBTL Division of the University of Utah Research Institute, under the sponsorship of the U.S. Food and Drug Administration's then Bureau of Medical Devices. A second edition was approved in 1992.

Compared to the 1992 edition, this third edition emphasizes changes to EMC requirements; adds tests for electrosurgical interference; clarifies the common mode rejection requirements and testing; and improves pacer pulse testing and reporting by providing methods for obtaining ventricular fibrillation examples, new annexes, and new reference standards. Some definitions were changed to adopt terminology common to the IEC documents (e.g., "peak-to-peak" is equivalent to "peak-to-valley"; "over/undershoot" was reduced to simply "overshoot").

The objective of this standard is to provide minimum labeling, performance, and safety requirements that will help ensure a reasonable level of clinical efficacy and patient safety in the use of cardiac monitors. The waveforms specified in this standard to check QRS detection, pacer, and rate meters can only approximate the physiological signals obtained from the surface of the body. Physiological electrical signals from the heart are complex in shape, amplitude, and rhythm, and may vary drastically from beat to beat. Designing a test waveform sequence that totally represents all electrical signals generated by the heart in health and disease is not possible. Therefore, monitors that conform to this standard could, in some situations, display erroneous heart rate information. Included with this third revision is information about access to a public domain database for providing digital representations of the test signals to simplify testing the instrumentation. This information can be obtained by contacting AAMI through its Web site or national office.

This standard, like any other, must be reviewed and updated periodically to assimilate progressive technological developments. In addition, as other standards pertaining to cardiac monitors are promulgated, they must be incorporated by reference to further ensure safety and efficacy with respect to such characteristics as electromagnetic compatibility and device performance under adverse environmental conditions. To this end, this revision attempts to more closely align this standard with those found internationally.

This standard does not include performance requirements for the detection of ventricular fibrillation (VF) by the cardiac monitor. The testing of VF is described in ANSI/AAMI EC57:1998.

This standard reflects the conscientious efforts of concerned physicians, biomedical and clinical engineers, nurses, manufacturers, and government representatives to develop a standard for those performance levels that could reasonably be achieved at this time.

As used within the context of this document, "shall" indicates requirements strictly to be followed to conform to the standard. "Should" indicates that among several possibilities, one is recommended as particularly suitable, without mentioning or excluding others; that a certain course of action is preferred but not necessarily required; or that (in the negative form) a certain possibility or course of action should be avoided but is not prohibited. "May" is used to indicate that a course of action is permissible within the limits of the recommended practice. "Can" is used as a statement of possibility and capability. Finally, "must" is used only to describe "unavoidable" situations, including those mandated by government regulations.

Suggestions for improving this standard are invited. Comments and suggested revisions should be sent to AAMI, 1110 N. Glebe Road, Suite 220, Arlington, VA 22201.

NOTE—This foreword is not part of the American National Standard, *Cardiac monitors, heart rate meters, and alarms*, ANSI/AAMI EC13:2002.

Single user license only. Copying, networking, and distribution prohibited.

iRhythm, Inc. / Welch Allyn, Inc.
Exhibit 1030
Page 8

Cardiac monitors, heart rate meters, and alarms

1 Scope

This standard establishes minimum safety and performance requirements for electrocardiograph (ECG) heart rate and waveform monitors that are intended for use under the operating conditions specified in this standard. Subject to this standard are all parts of such monitors necessary to:

a) obtain a heart rate indication via noninvasive ECG sensing from the patient's body;

b) amplify and transmit this signal and display the heart rate and/or ECG waveform; and

c) provide alarms, based on adjustable alarm criteria, upon the sustained occurrence of the following rate-dependent phenomena: cardiac standstill, bradycardia, and/or tachycardia.

NOTE—The safety and performance criteria defined in this standard are intended principally for use in design qualification or "type" evaluation by the manufacturer. (Type evaluation is the full battery of tests that must be done on a typical instrument or group of typical instruments to verify that all performance design requirements have been met. It is used to officially establish that a product model's design has achieved compliance with all standards to which a manufacturer claims compliance.)

1.1 Inclusions

Included within the scope of this standard are the following devices:

a) portable and battery-powered ECG monitors intended for use within the range of environmental conditions defined in 4.2.1;

b) operating room and intensive care heart rate monitors based on the ECG;

c) intensive care and intermediate care ECG monitors using telemetry;

d) subsystems of more complex devices (such as arrhythmia monitors and defibrillator monitors) that provide the basic information described in the scope of this standard; and

e) neonatal/pediatric monitors.

1.2 Exclusions

Not included within the scope of this standard are:

a) devices for fetal heart rate monitoring;

b) devices for pressure monitoring;

c) pulse plethysmographic devices;

d) devices that use invasive catheters or sensors to obtain an indication of heart electrical activity;

e) instruments or systems for emergency telemetry from ambulances or for out-of-hospital ambulatory monitoring;

f) devices for ambulatory monitoring that store ECG data for review at a later time, including scanning and readout devices;

g) telephone transmission devices;

h) devices intended for use under extreme or uncontrolled environmental conditions outside of a hospital or physician's office;

i) diagnostic electrocardiographic devices (these devices are covered by the American National Standard, *Diagnostic electrocardiographic devices* [see reference document 2.2]); and

Single user license only. Copying, networking, and distribution prohibited.

iRhythm, Inc. / Welch Allyn, Inc.
Exhibit 1030
Page 9

j) equipment where the monitor-like functions and capabilities are required for trigger acquisition of other instrumentation not intended to be the primary cardiac monitor used for patient management (e.g., intra-aortic balloon pumps, ventricular assist devices).

NOTE—Devices that provide selection between diagnostic and monitoring functions shall meet the requirements of the appropriate standard—the standard for cardiac monitors, heart rate meters, and alarms, or the standard for diagnostic electrocardiographic devices—when selected for that function.

1.3 Differences in monitors

Some portions of this standard may not apply to all monitors. For these monitors, it is only required that they meet applicable provisions of this standard.

2 Normative references

The following standards contain provisions that, through reference in this text, constitute provisions of this standard. At the time of publication, the editions indicated were valid. All standards are subject to revision, and parties to agreements based on this standard are encouraged to investigate the possibility of applying the most recent editions of the standards indicated below. The Association for the Advancement of Medical Instrumentation maintains a register of currently valid AAMI/American National Standards.

2.1 ASSOCIATION FOR THE ADVANCEMENT OF MEDICAL INSTRUMENTATION. *Safe current limits for electromedical apparatus*. ANSI/AAMI ES1:1993. Arlington (VA): AAMI, 1993. American National Standard.

2.2 ASSOCIATION FOR THE ADVANCEMENT OF MEDICAL INSTRUMENTATION. *Diagnostic electrocardiographic devices*. ANSI/AAMI EC11:1991/(R)2001. Arlington (VA): AAMI, 2001. American National Standard.

2.3 ASSOCIATION FOR THE ADVANCEMENT OF MEDICAL INSTRUMENTATION. *Cardiac defibrillator devices*. ANSI/AAMI DF2:1996. Arlington (VA): AAMI, 1996. American National Standard.

2.4 ASSOCIATION FOR THE ADVANCEMENT OF MEDICAL INSTRUMENTATION. *ECG cables and leadwires*. ANSI/AAMI EC53:1995/(R)2001. Arlington (VA): AAMI, 2001. American National Standard.

2.5 EUROPEAN NORM. *Industrial, Scientific and Medical (ISM) Radio-Frequency Equipment—Radio Disturbance Characteristics—Limits and Methods of Measurement*. EN55011 (European Norm version of CISPR 11).

2.6 INTERNATIONAL ELECTROTECHNICAL COMMISSION. *Part 1: General requirements for safety. 2. Collateral standard: Electromagnetic compatibility—Requirements and tests*. IEC 60601-1-2:2001.

2.7 INTERNATIONAL ELECTROTECHNICAL COMMISSION. *Particular requirements for the safety of electrocardiographic monitoring equipment*. IEC 60601-2-27:1994.

2.8 INTERNATIONAL ELECTROTECHNICAL COMMISSION. *Particular requirements for safety. Specifications for electrocardiographs*. IEC 60601-2-25:1993.

2.9 UNDERWRITERS LABORATORIES. *Medical electrical equipment, Part 1: General requirements for safety*. UL 2601.1:2000.

3 Definitions

For the purposes of this standard, the following definitions apply.

3.1 arrhythmia monitor: Device that distinguishes, analyzes, and displays heart rhythm information in addition to heart rate. A subsystem of an arrhythmia monitor, which essentially performs the functions of a cardiac monitor, providing continuous display of heart rate and alarming when the patient's heart rate exceeds preset limits, is subject to the minimum requirements of this standard.

3.2 aspect ratio: For a display, ratio of the vertical sensitivity (in mm/mV) to the horizontal sensitivity (in mm/s).

3.3 auxiliary output: Accessible connector or terminal providing electrical connection to the circuits of the device for the purpose of displaying, amplifying, or processing the ECG signal.

3.4 band-limited response: Signal or amplifier response limited to a range (band) of frequencies.

3.5 buffer amplifier: Amplifier that has an output voltage equal to its input voltage to a very high degree of accuracy. Its characteristics usually include a high input impedance to minimize noise and errors due to skin-electrode impedance; its output impedance is usually very low.

Single user license only. Copying, networking, and distribution prohibited.

iRhythm, Inc. / Welch Allyn, Inc.
Exhibit 1030
Page 10

3.6 central terminal according to Wilson (CT): Terminal at the average potential of the R (RA–right arm), L (LA–left arm), and F (LL–left leg) potentials.

3.7 channel: Portion of the recording system comprising the proportionate width of the recording medium and the associated amplifier for one lead.

3.8 common mode rejection: Ability of a differential amplifier to reject common mode voltage.

3.9 common mode voltage: Undesired voltage of identical amplitude and phase applied to both inputs of a differential amplifier.

3.10 defibrillator-monitor: Instrument that combines the functions of a defibrillator and a monitor. The monitor portion of such an instrument is subject to the provisions of this standard.

3.11 diagnostic electrocardiographic (ECG) device: ECG recording and/or display device intended for obtaining a set of conventional or orthogonal ECG signatures that accurately represents the detailed waveforms in each cardiac cycle and the beat-to-beat variability for determining cardiac rhythm. Such devices typically have wider bandwidths and lower reproduction errors than cardiac monitors.

3.12 direct writer: Device that produces a visible, permanent record of the ECG.

3.13 ESIS: Electrosurgical interference suppression. The ability to display and process ECG signals in a satisfactory manner while connected to a patient on whom an electrosurgical device is being used. Without such suppression, the high RF output of an electrosurgical device renders ECG monitoring impossible.

3.14 Frank leads: Vectorcardiographic orthogonal X, Y, and Z signals obtained by summing seven electrode voltages in a manner first proposed by Frank (1956). (See annex B, cited references, and bibliography.)

3.15 hysteresis: Inability of a direct writer's output trace to attain the same position for the same input voltage if that position is approached from one side or the other.

3.16 input circuit: Circuit consisting of, for example, an amplifier input, weighing networks, protection networks, high-frequency filters, and patient cables.

3.17 input impedance: Voltage-to-current ratio measured at any frequency when applied to the inputs of an amplifier.

3.18 isolated patient connection: Input circuit exhibiting leakage and sink current characteristics that comply with the risk current limits specified for isolated patient connections in the American National Standard, *Safe current limits for electromedical apparatus*.

3.19 lead: For many years, this term has been used in two different senses: (1) a system of conducting wires used to detect body surface potentials; and (2) a single conducting wire which, when attached to the patient by an electrode, is sometimes called a *patient lead*.

3.20 lead electrode: Electrode fastened on a specific part of the body to detect, in combination with other electrodes, heart action potentials.

3.21 lead selector: Switch used to select certain leads.

3.22 leakage current: Undesired current, including both resistive and reactive currents, that flows through or across the insulators that separate electrical conductors at different potentials.

3.23 line isolation monitor: Device used in conjunction with a power system isolation transformer, a device that periodically checks that the output of the isolation transformer is still isolated with respect to earth ground. Such a monitor momentarily and periodically attempts to pulse the common mode of the isolation transformer's secondary above ground and back again through a large impedance. Success in moving the common mode voltage sufficiently verifies that the transformer output is still isolated from ground.

3.24 monitor: Device used to acquire and/or display ECG signals with the primary purpose of continuous detection of cardiac rhythm. Although the device may display individual waveforms, morphological accuracy may be compromised in comparison to a diagnostic ECG device.

3.25 multi-channel electrocardiograph: Diagnostic ECG device capable of simultaneous recording from several ECG leads.

3.26 neonatal monitor: Monitor specifically designed to be used with newborn infants up to six weeks of age.

3.27 nonpermanent display: Display that is not permanent, such as the display on an oscilloscope.

Single user license only. Copying, networking, and distribution prohibited.

iRhythm, Inc. / Welch Allyn, Inc.
Exhibit 1030
Page 11

3.28 overshoot: Amount of over-travel (plus or minus) of the ECG output trace beyond its final steady deflection when a step voltage is applied at the input leads.

3.29 patient electrode connection: Conducting tip of a patient cable making contact with a lead electrode.

3.30 peak-to-valley (p-v): Amplitude of a wave (e.g., sinusoidal or QRS) measured from the upper side of its positive peak to the upper side of its negative peak to eliminate from the measurement the thickness of the display trace or printed trace.

3.31 pediatric monitor: Monitor specifically designed to deal with ECG signals from newborn infants and children up to eight years of age. Various ECG amplitudes and time durations have ranges that are different for newborns and infants, as compared to adults; these differences gradually disappear with age.

3.32 permanent display: Display of waveforms and/or characters on a medium such as paper that can be retained and filed for indefinite time periods and directly read or interpreted.

3.33 reference electrode: Reference point for differential amplifiers and/or the connection for an ac suppressor-amplifier. The reference electrode, which is not involved in ECG lead combinations, is usually the electrode attached to the RL.

3.34 referred-to-input (RTI): Term used to describe an output that has been expressed by specifying, independent of the system gain, the equivalent input signal.

3.35 rise time: As applied to an input or output step, time required to go from 10 percent to 90 percent of the total change.

3.36 risk current: Non-therapeutic current that may flow through the patient, medical staff, or a bystander as a result of the use of an electromedical apparatus.

3.37 sampled system: System that represents a continuous input signal as a series of discrete values of amplitudes and/or times. The output may be a series of discrete values or a continuous signal derived from the discrete values. Sampled systems, often referred to as digital systems, are typically nonlinear in their behavior.

3.38 sink current: Current that flows into a device or any part thereof when an external voltage is applied to it.

3.39 source current: Undesirable electrical current that flows from any part of an electromedical apparatus to any other part or to ground when no external voltages are applied.

3.40 sustained: For purposes of this standard and as applied to arrhythmias, a time period of at least 60 seconds.

3.41 time base: Units of the horizontal axis of the display, usually expressed as mm/s. The time base may differ from actual paper speed for devices that do not display the ECG signal in real time.

4 Requirements

4.1 Labeling requirements

In addition to federal regulations applicable to the labeling of all medical devices, the requirements of this section shall apply to all devices within the scope of this standard.

4.1.1 Device markings

4.1.1.1 Identification of product characteristics

Cardiac monitors shall be clearly and permanently marked with the following information:

a) the manufacturer's name and address (reference UL2601.1, Section 6.1);

b) the catalogue, style, model, or other type designation;

c) the serial number;

d) power requirements (reference UL2601.1, Section 6.1);

e) the nominal supply (mains) frequency (reference UL2601.1, Section 6.1);

f) the number of phases, unless the device is intended for single phase use only (reference UL2601.1, Section 6.1);

Single user license only. Copying, networking, and distribution prohibited.

g) the current-carrying capacity of each convenience receptacle and/or identification of the instrument(s) that can be connected to it if the device provides mains power for other devices (reference UL2601.1, Section 6.1); and

h) if equipped, battery type and disposal method as disclosed by the manufacturer.

4.1.1.2 Panel controls and switches

All controls, switches, and connectors shall be clearly and concisely labeled to identify their function. Identification of the modality in use must be indicated if a change is provided between monitor and diagnostic equipment.

4.1.1.3 Electrical safety

The monitor may have markings that warn maintenance personnel of potential shock hazards from accidental contact with parts. Other markings may be used to identify current ratings that may overload branch circuits. Any such markings shall be placed in locations suitable for the intended use and shall be clearly visible. (See UL 2601.1, Section 6.2.)

NOTE—Markings that are inside the enclosure of the equipment shall be considered clearly visible if they can be viewed when the connections to the supply are being made or inspected. Markings inside the enclosure of cord-connected equipment are considered to be clearly visible if the markings would be seen before a hazard is encountered.

4.1.1.4 Fuse holders

If fuse holders accessible to the operator are provided, they shall be clearly marked with the applicable fuse rating, in amperes, and with the fuse type. (See UL 2601.1, Section 6.1.)

4.1.1.5 Patient electrode connection nomenclature and colors

Colors, if used, shall be associated with either individually-colored patient lead conductors and/or, if plug bodies are used, with the bodies at the electrode ends. Permanent cable legends (e.g., engraved or molded) also shall be used for individual patient electrode connection identification. Table 1 provides, for both diagnostic 12-lead electrocardiography and Frank vector leads, the standard color code for patient lead conductors and the standard electrode placement. Although electrode locations for monitoring are not now standardized, it is recommended that lead identifiers and color codes for monitor leads conform as closely as possible with those for diagnostic electrocardiographs.

Single user license only. Copying, networking, and distribution prohibited.

iRhythm, Inc. / Welch Allyn, Inc.
Exhibit 1030
Page 13

Table 1—Patient electrode connection definitions and color code

System	Patient electrode connection identifier	Color code	Position on body surface
Conventional [1]	RA	White	Right arm
	LA	Black	Left arm
	LL	Red	Left leg
	V	Brown	Single movable chest electrode
	V1	Brown/red	4th Intercostal (IC) space at right border of sternum
	V2	Brown/yellow	4th IC space at left border of sternum
	V3	Brown/green	Midway between V2 and V4
	V4	Brown/blue	5th IC space on left midclavicular line
	V5	Brown/orange	Left anterior axillary line at the horizontal level of V4
	V6	Brown/violet	Left midaxillary line at the horizontal level of V4
	RL	Green	Right leg
Frank vector	I	Orange/red	At the right midaxillary line [2]
	E	Orange/yellow	At the front midline [2]
	C	Orange/green	Between front midline and left midaxillary line at a 45 degree angle
	A	Orange/brown	At the left midaxillary line [2]
	M	Orange/black	At the back midline [1]
	H	Orange/violet	On the back of the neck or on the forehead
	F	Red	On the left leg

[1] Requirements for IEC compliance are specified in IEC 60601-2-47, clause 6.1 aa, Table 101.

[2] Located at the transverse level of the ventricles (i.e., fifth interspace at the left sternal border).

NOTE—Refer to EC11 for details on conventional lead and Frank vector lead system. (Conventional is AHA in the United States.)

4.1.1.6 Warnings and precautions

Labeling should include cautions and warnings to indicate any harm to the patients or operators that is likely to be caused by their exposure to the monitor. Such a labeling requirement generally is limited to known harmful exposures. Device markings and operator's manuals should have these cautions and warnings clearly identified and easily understood.

4.1.2 Operator manual

An operator manual, which contains adequate instructions for the proper installation and the safe and effective operation of the device and identifies acceptable repair facilities, shall be provided with each unit (or, in the case of multiple orders, as specified in the purchase contract). The following minimum information shall be supplied.

4.1.2.1 Disclosure of performance specifications

a) **Electrosurgery protection.** Cautionary information must be provided if electromagnetic interference or power overload caused by electrosurgical instruments will damage or otherwise affect the operation of the monitoring device. Monitors that claim protection from damage due to electrosurgery interference must, when used with high-frequency electrosurgical equipment, return to their previous operating mode within 10 seconds after removal of exposure to the high-frequency signals and field, without loss of any permanently stored data.

Single user license only. Copying, networking, and distribution prohibited.

iRhythm, Inc. / Welch Allyn, Inc.
Exhibit 1030
Page 14

The means of coupling to the monitor and the fraction of electrosurgical machine output for this requirement are defined respectively by Figures 12 and 13A. The high-frequency electrosurgical equipment used shall have a minimum power cut mode capability of 300 W, a minimum power coag mode of 100 W, and a working frequency of 450 kHz (±100 kHz).

b) **Respiration, leads-off sensing, and active noise suppression.** For cardiac monitors designed to intentionally apply a current to the patient for respiration sensing, leads-off sensing, or active noise suppression, the manufacturer shall disclose the waveforms (in the form of voltage, current, frequency, or other appropriate electrical parameters) that are applied to the patient. (See also 4.2.5.)

c) **Tall T-wave rejection capability.** Disclosure shall be made of the maximum T-wave amplitude (aT) for which heart rate indication is within the error limits specified in 4.2.7. A QRS test signal of 1 millivolt (mV) amplitude and 100 millisecond (ms) duration (d), with a heart rate of 80 beats per minute (bpm), shall be used; the T-wave duration (dT) shall be 180 ms, and the QT interval (dQT) shall be 350 ms. QRS amplitude is defined as [ar + as] in Figures 2 and 6. A 20 second (s) monitor stabilization period shall be allowed before testing. If the maximum T-wave amplitude that can be rejected is affected by the bandwidth chosen, disclose separately the maximum T-wave amplitude rejected for each bandwidth.

d) **Heart rate averaging.** The type of averaging done to compute the minute heart rate and, if applicable, the updating rate of the display shall be disclosed.

e) **Heart rate meter accuracy and response to irregular rhythm.** Disclosure shall be made of the indicated heart rate, after a 20 second monitor stabilization period, for the four types of alternating ECG complexes described in Figure 3.

f) **Response time of heart rate meter to change in heart rate.** Disclosure shall be made of the maximum time, to the nearest second and including the update time of the device, required for the heart rate meter to indicate a new heart rate for a step increase from 80 bpm to 120 bpm and a step decrease from 80 bpm to 40 bpm. The response time is measured from the time of the first QRS complex of the new rate to the time the heart rate meter first reads 37 percent of the heart rate indication at 80 bpm plus (a) for the step increase, 63 percent of the steady state indication at 120 bpm or greater, and (b) for the step decrease, 63 percent of the steady state indication at 40 bpm or less.

g) **Time to alarm for tachycardia.** Disclosure shall be made of the time to alarm for the two ventricular tachycardia waveforms shown in Figure 4, following a normal 80 bpm rate with the upper alarm limit set closest to 100 bpm and the lower alarm limit set closest to 60 bpm. Disclosure also shall be made of cardiac monitor failure to alarm on either of these waveforms. In addition, the time to alarm shall be disclosed for these waveforms when their amplitudes are one-half and twice the indicated amplitudes.

h) **Pacemaker pulse rejection warning label.** The following or a substantially similar warning shall be prominently displayed near the front of the operator manual: "WARNING—PACEMAKER PATIENTS. Rate meters may continue to count the pacemaker rate during occurrences of cardiac arrest or some arrhythmias. Do not rely entirely upon rate meter alarms. Keep pacemaker patients under close surveillance. See this manual for disclosure of the pacemaker pulse rejection capability of this instrument."

i) **Audible alarm disclosure.** If the cardiac monitor has an audible alarm, the manufacturer shall disclose the alarm's location (i.e., central station, bedside, or both) and the frequency or other descriptive characteristics of the sounds.

j) **Visual alarm disclosure.** If the cardiac monitor has a visual alarm, the manufacturer shall disclose its location, color, size, and modulation (flashing).

k) **Battery-powered monitors.** For monitors equipped with batteries, the manufacturer shall disclose the minimum operating time of the monitor and of any connected accessories, provided that the batteries are new and fully charged. If rechargeable batteries are provided, the manufacturer shall disclose the battery charge time from depletion to 90 percent charge. In addition, a battery depletion indicator shall be provided and its function described. The battery charging cycle or charging procedure also shall be clearly stated. Any performance reduction as described in this standard due to the battery charge state shall be disclosed.

l) **Telemetry.** Emergency telemetry from ambulances or for out-of-hospital monitoring is not covered by this standard (see 1.2[e]). The following requirements apply only to in-hospital patient monitoring using telemetry.

1) *Electromagnetic compatibility.* Disclosure shall be made of the radio frequency (RF) transmitter carrier frequency and modulation, as well as the current level and frequency of any RF signal intentionally applied to the patient.

Single user license only. Copying, networking, and distribution prohibited.

iRhythm, Inc. / Welch Allyn, Inc.
Exhibit 1030
Page 15

2) *Special electrodes, cables, or skin preparation requirements.* Disclosure shall be made of any special electrode connection cables or skin preparation recommended by the manufacturer to reduce the possibility of motion artifact during patient monitoring.

3) *Leads-off, out-of-range, and battery depletion.* Disclosure shall be made of any indication the user will have of the following faults: detached leads, patient out-of-range, transmitter failure, and transmitter battery depletion. The expected battery life and recharging time (if applicable) for new transmitter batteries also shall be disclosed. If device conformance with the performance requirements of this standard is contingent upon battery voltage, then a battery depletion indicator shall be provided and its function described.

m) **Line isolation monitor transients.** Cautionary information shall be provided, warning that line isolation monitor transients may resemble actual cardiac waveforms and thus inhibit heart rate alarms. Methods for minimizing this problem, including instructions for proper electrode placement and cable arrangement, also shall be provided.

n) **Special disclosure requirements for monitors with nonpermanent ECG waveform display.** The available time bases and full adjustment range of the aspect ratio shall be disclosed.

o) **Electrode polarization.** The manufacturer shall describe the need to pay special attention to the type of electrodes used, since some electrodes may be subject to large offset potentials due to polarization. Recovery time after application of defibrillator pulses may be especially compromised. Squeeze bulb electrodes commonly used for diagnostic ECG recording may be particularly vulnerable to this effect (reference IEC 60601-2-27, Section 6.8.2).

p) **Auxiliary output.** Disclosure shall be made regarding proper connection of other devices to the auxiliary output, if provided, with particular attention to maintaining risk current limits. In addition, the manufacturer shall disclose all auxiliary outputs' bandwidth, gain, and propagation delay. Manufacturers also shall disclose how internal pacemaker pulses are represented in the auxiliary output (their inclusion or absence, and whether enhanced pace pulses are summed with the ECG signal).

q) **Alarm silencing.** Disclosure shall be made of the time required for reactivating the alarm after it has been silenced. If this time is adjustable, the range of time intervals also shall be disclosed.

r) **Battery disposal.** If equipped with a battery, adequate disposal instructions shall be provided.

4.1.2.2 Application notes

Appropriate information concerning the application of the device shall be provided, including but not limited to:

a) a description of the device's intended application and available functions;

b) the procedures for checking proper functioning of all controls and indicators;

c) the following information concerning electrodes and cables used to sense the ECG:

— the number of electrodes required (reference IEC 60601-2-27, Section 6.8.2);

— an indication, at the electrode end, of polarity if other than a standard cable is used;

— a description of any special cable characteristics (or a specification of the part number of the cable(s) permissible for use) if needed for the system to conform to this standard (reference IEC 60601-2-27, Section 6.8.2); and

— a clear warning that electrodes of dissimilar metals should not be used unless the cardiac monitor can handle polarization potentials as high as 1 volt (V);

d) disclosure of the settings necessary for pediatric and/or neonatal use (if applicable).

4.1.3 Service manual

A service manual containing adequate care, preventive maintenance, and repair instructions consistent with the manufacturer's requirements shall be provided with each unit upon request (or, in the case of multiple orders, as specified in the purchase contract). These instructions shall include items such as electronic circuit schematics, logic and/or block diagrams, wiring diagrams, and manufacturer's part numbers, consistent with field repairable units as determined by the manufacturer. This information shall be complete enough to allow a skilled technician to accomplish reasonable field repair, calibration, or other maintenance as specified by the manufacturer. If units cannot be repaired in the field, it shall be clearly disclosed. In addition, the instructions shall identify authorized

Single user license only. Copying, networking, and distribution prohibited.

iRhythm, Inc. / Welch Allyn, Inc.
Exhibit 1030
Page 16

service representatives and acceptable repair facilities, disclose any test equipment requirements, and include recommendations concerning test methods that can be used for verification of device performance. Preventive maintenance will be specified by item, the frequency with which preventive maintenance procedures should be implemented, and verification pass/fail criteria (reference UL 2601.1, Section 6.8.2). Optional training should be offered by the manufacturer or authorized service agents (see also 4.1.4).

NOTE—The operator and service manuals may be combined.

4.1.4 Pacemaker pulse rejection capability

The following information shall be disclosed in the service manual and in the operator manual.

4.1.4.1 Pacemaker pulse rejection without overshoot

Disclosure shall be made of the heart rate indicated by the monitor for pacemaker pulses having amplitudes (a_p) from ±2 mV to ±700 mV and pulse widths (d_p) from 0.1 ms to 2 ms. If the monitor cannot effectively reject pulses in this range, disclosure shall be made of the range of pulse amplitudes and widths that the monitor can reject. The monitor's pacemaker pulse rejection capability shall be disclosed for: (a) pacemaker pulses alone of the form shown in Figure 5a; (b) pacemaker pulses with a normally paced QRS-T (Figure 5b); and (c) pacemaker pulses with an ineffectively paced QRS pattern (Figure 5c). In all cases, the overshoot (a_o) shall be less than 5 percent of pacer amplitude (0.05 a_p in Figure 5a) and the settling time of the overshoot must be less than 5 microseconds (µs). The rise and fall times shall be 10 percent of the pulse width, but not greater than 100 µs, and the onset of the pacemaker pulse shall occur 40 ms or less before the onset of the QRS complex.

Disclosure of rejection capability also shall be made for (a), (b), and (c) above when a (atrial) pacing pulse with identical amplitude and duration precedes this (ventricular) pacing pulse by 150 ms to 250 ms.

NOTE—The above pulse parameters are intended to encompass the characteristics of both unipolar and bipolar pacemakers. Bipolar pacing pulses are, however, generally of lower amplitude than unipolar pulses, and typically do not exhibit a significant overshoot.

4.1.4.2 Pacemaker pulse rejection with overshoot

Disclosure shall be made of the heart rate indicated by the monitor for pacemaker pulses having amplitudes (a_p) from ±2 mV to ±700 mV and pulse widths (d_p) from 0.1 ms to 2 ms. If the monitor cannot effectively reject pulses in this range, disclosure shall be made of the range of pulse amplitudes and widths that the monitor can reject. The monitor's pacemaker pulse rejection capability shall be disclosed for the same pulse characteristics as specified in 4.1.4.1. In all cases, overshoot (a_o) shall have recharge time constants (t_o) between 4 ms and 100 ms; the rise and fall times shall be 10 percent of the pulse width, but not greater than 100 µs, and the onset of the pacemaker pulse shall occur 40 ms or less before the onset of the QRS complex.

The amplitude of the overshoot (a_o) shall be defined by method A or method B below, and it must be disclosed whether the monitor is specified for method A, method B, or for both.

Method A: a_o shall be within the range 0.025 a_p to 0.25 a_p, independent of time constant choice, but not greater than 2 mV.

Method B: a_o shall be equal to $a_p d_p / t_o$.

NOTE—For method B, it is permissible to have the main pulse not be flat on top, but sag by an amount equal to the overshoot's amplitude, as capacitive coupling would cause. Also, for method B with A-V sequential pacer pulses, the overshoot of the ventricular pulse must include any residual left over from unsettled overshoot of the atrial pulse.

4.1.4.3 Pacer pulse detector rejection of fast ECG signals

Disclosure shall be made in V/s RTI of the minimum input slew rate that will cause approximately 50 percent of Figure 5d's pulses to trigger the device's pacer pulse detector. If the monitor behaves differently in different modes of operation, this also must be disclosed.

4.1.4.4 Pacemaker pulse appearance in auxiliary output

Disclosure shall be made of what conditioning, if any, is done by the monitor on pacemaker pulses that are included in the monitor's auxiliary output. Indicate if only bandpass filtering is done, or if pacemaker pulses are removed and replaced by fixed digital pulses. Indicate the bandwidth of filtering and shape of the substituted pulses as appropriate.

Single user license only. Copying, networking, and distribution prohibited.

iRhythm, Inc. / Welch Allyn, Inc.
Exhibit 1030
Page 17

4.1.4.5 Pacer pulse detector disabling

If the operator can disable the pacemaker pulse detector (or cause it to be ignored), disclosure must be made of that mode selection. If certain signal conditions are known to disable the pacemaker pulse detector, those conditions also shall be disclosed.

4.1.5 Summary

Table 2 provides a summary of the labeling/disclosure requirements of this standard.

Table 2—Summary of labeling/disclosure requirements

Section	Requirement description
4.1.1/4.1.1.1	*Device markings/identification of product characteristics:* Manufacturer's name and address, type designation, serial number, range of supply voltage and maximum operating current/power, nominal supply frequency, number of phases, current-carrying capacity of convenience receptacle, modality identification, battery disposal information.
4.1.1.2	*Panel controls and switches:* Identification of controls, modality identification, switches, connectors.
4.1.1.3	*Electrical safety:* Readily visible markings for shock hazard and/or overcurrent ratings.
4.1.1.4	*Fuse holders:* Fuse ratings in amperes, voltage, and fuse type.
4.1.1.5	*Patient electrode connection nomenclature and colors:* Conformance with Table 1, if applicable.
4.1.1.6	*Warnings and precautions:* Cautionary information regarding harm to patient and operator due to exposure to monitor.
4.1.2/4.1.2.1	*Operator manual/disclosure of performance specifications*.
4.1.2.1 (a)	*Electrosurgery protection:* Cautionary information if electrosurgical unit overload will damage device.
4.1.2.1 (b)	*Respiration, leads-off sensing, and active noise suppression:* If applicable, disclosure of waveforms applied intentionally to patient.
4.1.2.1 (c)	*Tall T-wave rejection capability:* Maximum T-wave amplitude for which heart rate indication is within specified error limits. If performance is affected by low-frequency response, disclose for all choices.
4.1.2.1 (d)	*Heart rate averaging:* Type of averaging used for computation of minute heart rate.
4.1.2.1 (e)	*Heart rate meter accuracy and response to irregular rhythm:* Indicated heart rate for waveforms of Figure 3.
4.1.2.1 (f)	*Response time of heart rate meter to change in heart rate:* Time in seconds for meter to indicate 40 bpm increase and 40 bpm decrease from 80 bpm.
4.1.2.1 (g)	*Time to alarm for tachycardia:* Time to alarm (or failure to alarm, if applicable) for waveforms of Figure 4.
4.1.2.1 (h)	*Pacemaker pulse rejection warning label:* Warning of the need for close surveillance of pacemaker patients, since rate meters may count pacemaker rate during cardiac arrest or some arrhythmias.
4.1.2.1 (i)	*Audible alarm disclosure:* Location of source and frequency of sound.
4.1.2.1 (j)	*Visual alarm disclosure:* Location, color, size, and modulation.
4.1.2.1 (k)	*Battery-powered monitors:* Minimum operating time, battery charge time, provision of battery depletion indicator, description of function.
4.1.2.1 (l)	*Telemetry:* EMC information, special electrode requirements, fault indication (detached leads, patient out-of-range, transmitter battery failure) if applicable, battery life and recharging time.
4.1.2.1 (m)	*Line isolation monitor transients:* Cautionary information and methods of minimizing interference.
4.1.2.1 (n)	*Special disclosure requirements for monitors with nonpermanent ECG waveform display:* Available time bases; range of adjustment of aspect ratio.

Single user license only. Copying, networking, and distribution prohibited.

iRhythm, Inc. / Welch Allyn, Inc.
Exhibit 1030
Page 18

Section	Requirement description
4.1.2.1 (o)	*Electrode polarization:* Cautionary statement concerning effect of electrode type on system recovery from overload, especially recovery time after defibrillator pulses.
4.1.2.1 (p)	*Auxiliary output:* Explanation of proper connection of other devices to auxiliary output, if provided, with special reference to maintenance of risk current characteristics, including bandwidth, gain, propagation delay, and dealing with pacer pulses.
4.1.2.1 (q)	*Alarm silencing:* Disclosure of time required for reactivation of alarm after alarm silencing and, if alarm reactivation time is adjustable, disclosure of the range of time intervals.
4.1.2.1 (r)	*Battery disposal:* Adequate instructions for disposal of batteries.
4.1.2.2	*Application notes:* Description of device's intended application and available functions; procedures for checking controls and functions; information concerning electrodes—number of electrodes needed, polarity of cables (if other than standard AAMI cable); any special cable characteristics needed to ensure conformance with standard; warning about use of electrodes of dissimilar metals; settings necessary for pediatric/neonatal monitoring.
4.1.3	*Service manual:* Adequate care, preventive maintenance, and repair instructions; electrical specifications complete enough to allow reasonable field repair and that identify acceptable repair facilities; recommended frequency of prevention maintenance.
4.1.4/4.1.4.1	*Pacemaker pulse rejection capability/Pacemaker pulse rejection, without overshoot:* Disclosure in operator and service manual of pacemaker pulse rejection capability for pacing pulses without overshoot ±2 mV to ±700 mV amplitude, 0.1 ms to 2.0 ms duration, overshoot less than .05 a_p (Figure 5a), and settling time less than 5 µs; pulse onset, rise, and fall time not greater than 100 µs; pulse onset 40 ms or less before QRS onset; and with an identical pulse preceding this pulse by 150 ms to 250 ms.
4.1.4.2	*Pacemaker pulse rejection with overshoot:* Disclosure in operator and service manual of pacemaker pulse rejection capability for pacing pulses with same parameters as above except overshoot (recharge) time constants between 4 ms and 100 ms, overshoot defined by choice of two methods. Disclose whether test method A or B or both are used.
4.1.4.3	*Pacer pulse detector rejection of fast ECG signals:* Disclosure must be made in the operator and service manuals of the minimum typical slew rate in V/s RTI that will trip its pacer detector. See also Figure 5d.
4.1.4.4	*Pacemaker pulse appearance in auxiliary output:* Disclosure of filtering and any substitution done on pacemaker pulses as they appear in auxiliary output.
4.1.4.5	*Pacer pulse detector disabling:* Disclosure of operating modes or signal conditions that cause the pacer pulse detector to be disabled or ignored.

4.2 Performance requirements

NOTE—4.2.1 through 4.2.8, and 4.2.10 apply to all monitors, with or without ECG waveform display capability. 4.2.9 applies only to those devices that provide ECG waveform display. Unless otherwise stated, specifications in this section apply to the monitor performance regardless of the mode in which it is set. Any periods of inoperability due to overload or saturation conditions shall be indicated.

4.2.1 Operating conditions

Unless otherwise stated, the performance requirements of this standard shall be met under the following ambient environmental conditions (see UL 2601.1, Section 10.2.1):

Line voltage: 104 Vrms to 127 Vrms (root-mean-square)

Line frequency: 60 ± 1 Hz or 50 ± 1 Hz

NOTE—These ranges of operating conditions do not ensure the safety and effectiveness of devices intended for use under extreme or uncontrolled environmental conditions outside of a hospital environment or physician's office. Such devices are excluded from the scope of this standard.

Single user license only. Copying, networking, and distribution prohibited.

4.2.2 Overload protection

4.2.2.1 AC voltage

The device shall meet the requirements of this standard after a 10 second application of a 1 V p-v line frequency differential voltage to any patient electrode connection with any lead selection combination.

4.2.2.2 Defibrillator overload protection

NOTE—Meeting this requirement also dictates using an ECG cable that passes EC53, Section 4.5.3 (applicable document 2.4).

4.2.2.2.1 Recovery

The monitor shall recover within 5 seconds after exposure of any patient electrode connection/lead combination to simulated defibrillator discharges which have a damped sinusoidal waveform conforming to the limits specified in the American National Standard, *Cardiac defibrillator devices* (applicable document 2.3). The source generator shall have a minimum stored voltage of 5000 V and the energy delivered to the test assembly minimally shall be 360 J. The waveforms are to be delivered at 20 s intervals into a 100 ohm load, with 400 ohms interposed between the 100 ohm defibrillator load and one connection of the ECG device. The monitor's leads-off sensing must still function after these tests.

4.2.2.2.2 Reduction in energy delivered to the patient

The monitor shall incorporate current limiting devices so that the defibrillator energy delivered to the 100 ohm load is reduced by a maximum of 10 percent relative to the energy delivered to this load with the monitor disconnected. The number of required discharges is specified in Table 5.

4.2.2.2.3 Operator safety

In the case of a device that may be operated from battery power, application of defibrillator pulses in the arrangements described above, but with the monitor disconnected from any ac wall outlet and the power switch turned off and on, shall not make available more than 100 microcoulombs (μC) of charge to operator-accessible chassis points or controls of the monitor. In the case of a device that may be operated from battery power or from the line, the device also shall meet this requirement while disconnected from any ac wall outlet. For a device that may be operated from ac line or battery power, this requirement shall be met with the power line cord disconnected from any power source. After this test, the device shall meet the requirements of 4.2.3 through 4.2.10.

The above paragraph notwithstanding, whether a monitor is powered by ac mains or by battery, if the ECG cable supplied by the monitor's manufacturer contains any exposed metal on the plug that mates with the monitor, that exposed metal shall be connected to the charge-measuring circuit during this test. This also applies to a metal shroud on that connector, since such a shroud is somewhat exposed if not fully inserted.

4.2.3 Leakage current

The monitor shall utilize isolated patient connections. The risk currents flowing to or from the patient through the patient electrode connections, chassis, or monitor controls shall not exceed the limits specified in ES1 (reference document 2.1).

4.2.4 Auxiliary output

4.2.4.1 Where an auxiliary output is provided, the device shall meet all specifications after removal of a short-circuit applied to the auxiliary output for one minute.

4.2.4.2 The risk current limits specified in 4.2.3 shall not be exceeded upon proper connection of an auxiliary device to the auxiliary output. This proper connection shall be described in the operator manual.

4.2.5 Respiration, leads-off sensing, and active noise suppression

Currents intentionally applied to the patient for purposes of respiration sensing, leads-off sensing, or active noise suppression shall not exceed the maximum risk currents specified in 4.2.3. The direct current through any patient electrode connection, with all remaining patient electrode connections attached to a common node, shall not exceed 0.1 μA for any active patient electrode connection (i.e., any connection that serves as an input to an amplifier for measurement of ECG potentials). This current shall not exceed 1 μA for any other patient electrode connection.

4.2.6 QRS detection

Cardiac monitors shall have the ability to detect heart rate for the ranges of ECG signals and noise specified below.

Single user license only. Copying, networking, and distribution prohibited.

iRhythm, Inc. / Welch Allyn, Inc.
Exhibit 1030
Page 20

4.2.6.1 Range of QRS wave amplitude and duration

For a continuous train of simulated ECG pulses (Figure 6), the device shall meet the heart rate range and accuracy requirements of 4.2.7. The minimum range of QRS amplitude (a_r + a_s) is 0.5 mV to 5 mV, and the duration of the QRS wave is between 70 ms and 120 ms (40 ms and 120 ms for neonatal/pediatric monitors). For monitors set for adult patients, the heart rate meter shall not respond to signals having a QRS amplitude of 0.15 mV or less, or a duration of 10 ms or less with an amplitude of 1 mV. Response to either or both of these types of signals is permitted in monitors set for neonatal/pediatric patients.

4.2.6.2 Line frequency voltage tolerance

The maximum line frequency peak-to-valley sinusoidal voltage amplitude that can be superimposed on a train of QRS signals without exceeding the error limits specified in 4.2.7 for indicated heart rate accuracy shall be no less than 100 µV p-v. The QRS signal shall have an amplitude of 0.5 mV, a duration of 100 ms, and a repetition rate of 80 bpm. If equipment is fitted with a line frequency filter, the filter may be turned on during this test.

4.2.6.3 Drift tolerance

The cardiac monitor shall indicate the heart rate within the error limits of 4.2.7 when a 0.1 Hz triangular wave of 4 mV p-v amplitude is superimposed on a train of QRS signals of 0.5 mV amplitude, 100 ms duration, and 80 bpm repetition rate.

4.2.7 Range and accuracy of heart rate meter

The minimum allowable heart rate meter range shall be 30 bpm to 200 bpm, with an allowable readout error of no greater than ±10 percent of the input rate or ±5 bpm, whichever is greater. Cardiac monitors labeled for use with neonatal/pediatric patients shall have an extended heart rate range of at least 250 bpm. In addition, input ECG signals at rates less than the disclosed lower limit of the rate meter range shall not cause the meter to indicate a rate greater than this lower limit. Input signals at rates above the disclosed upper limit of the rate meter range, up to 300 bpm (350 bpm for monitors labeled for use with neonatal/pediatric patients), shall not cause the meter to indicate a rate lower than this upper limit.

4.2.8 Alarm system

If provided, the alarm system of a cardiac monitor shall generate a visible and/or audible alarm when the input heart rate is outside of the preset heart rate limits for more than a specified time. This alarm indication shall be given at bedside for units not connected to a central station. If the bedside unit is connected to a central station, the alarms may be located at the central station. In addition, the alarm system shall conform to the following requirements.

4.2.8.1 Alarm limit range

The range of upper alarm limit settings shall extend from 100 bpm or less to 200 bpm or more for adult cardiac monitors, and 250 bpm or more for monitors labeled for use with neonatal/pediatric patients. The range of lower alarm limit settings shall extend from 30 bpm or less to 100 bpm or more.

4.2.8.2 Resolution of alarm limit settings

The resolution capabilities for setting alarm limits shall be ±10 percent of the nominal setting or ±5 bpm, whichever is greater.

4.2.8.3 Alarm limit accuracy

The maximum error in the alarm limit setting shall be ±10 percent of the nominal setting or ±5 bpm, whichever is greater. The error (e_d) in the alarm limit setting is defined by the equation:

$$e_d = 100 \times \left| \frac{R_d - R_s}{R_s} \right|$$

where:

R_d = the displayed heart rate at which the alarm threshold is reached

R_s = the alarm limit setting

In addition, ECG signals at rates below the disclosed lower limit of the alarm range shall not fail to generate an alarm. If alarms are not disabled, input ECG signals at rates above the disclosed upper limit of the alarm range, up to 300 bpm (350 bpm for neonatal/pediatric monitors), shall not fail to generate an alarm.

Single user license only. Copying, networking, and distribution prohibited.

iRhythm, Inc. / Welch Allyn, Inc.
Exhibit 1030
Page 21

4.2.8.4 Time to alarm for cardiac standstill

The time to alarm for a step change in heart rate from 80 bpm to 0 bpm, with the lower alarm limit set closest to 60 bpm, shall not exceed 10 seconds.

4.2.8.5 Time to alarm for low heart rate

The time to alarm for a step change in heart rate from 80 bpm to 40 bpm, with the lower alarm limit set closest to 60 bpm, shall not exceed 10 seconds.

4.2.8.6 Time to alarm for high heart rate

The time to alarm for a step change in heart rate from 80 bpm to 120 bpm, with the upper alarm limit set closest to 100 bpm, shall not exceed 10 seconds.

4.2.8.7 Alarm silencing

Provision shall be made for silencing or resetting audible and visual alarms after activation. Monitors with latching alarms shall provide for resetting of any audible or visual alarm indicators. The manufacturer shall disclose the time requirement for reactivating the alarm; if this time is adjustable, the range of time intervals available also shall be disclosed.

4.2.8.8 Alarm disabling

If the alarm(s) can be disabled at the bedside, this condition shall be apparent on the front of the bedside unit. If the monitor is connected to a remote central monitoring site with no independent alarm settings, the alarm condition of the bedside unit also shall be displayed at the central monitoring station.

4.2.9 Special requirements for monitors with ECG waveform display capability

The following requirements apply only to cardiac monitors that provide ECG waveform display. Unless otherwise indicated, these requirements apply both to devices with permanent ("hard copy") records and those with nonpermanent ("volatile") displays. Waveform measurements shall be made from the output display of the monitor under consideration.

4.2.9.1 Input dynamic range

The device shall be capable of responding to and displaying differential voltages of ±5 mV varying at a rate up to 320 mV/s from a dc offset voltage in the range of –300 mV to +300 mV, when applied to any lead. The time-varying output signal amplitude shall not change by more than ±10 percent over the specified range of dc offset. Changes in offset voltages at a maximum rate of 1 mV/s shall not cause discontinuities in the output greater than 30 µV, referred to the input.

The ECG monitoring equipment also shall be provided with means to indicate that the equipment is inoperable due to an overload or saturation of any part of the amplifier. The amplitude of a ±5 mV signal shall not be reduced below 50 percent of the initial value at voltages less than ±300 mV, and the indicating means shall be fully operative before the amplitude of the signal is reduced to 50 percent of the initial value. Absence of a visible trace is an acceptable means of indication.

4.2.9.2 Input impedance

An electrode-to-skin impedance simulated by a 0.62 megohm resistor in parallel with a 4.7 nanofarad (nF) capacitor, in series with any patient electrode connection, shall not result in a signal reduction of the injected frequency of more than 20 percent of that obtained without the simulated impedance, within the bandwidth of 0.67 Hz to 40 Hz. This reduction shall not be exceeded with dc offset potentials as specified in 4.2.9.1. These requirements shall be met at all appropriate settings of the lead selector. A single-ended input impedance of at least 2.5 megohms over this entire frequency range will be needed to meet these requirements.

4.2.9.3 System noise

Noise due to patient cables, all internal circuits, and output displays shall not exceed 30 µV (p-v RTI) when the manufacturer's recommended cable is used, when all inputs are connected together through a 51 kilohm resistor in parallel with a 47 nF capacitor in series with each patient electrode connection when the cable is motionless. This test shall be done with any line frequency notch filter on (i.e., enabled).

Single user license only. Copying, networking, and distribution prohibited.

iRhythm, Inc. / Welch Allyn, Inc.
Exhibit 1030
Page 22

4.2.9.4 Multichannel crosstalk

Any input signal limited in amplitude and rate of change as per 4.2.9.1, applied to any one lead of a multi-channel monitor, and with all unused inputs connected to patient reference through a 51 kilohm resistor in parallel with a 47 nF capacitor, shall not produce an unwanted output greater than 5 percent of the applied signals (multiplied by the gain) in those channels where no signal is applied.

4.2.9.5 Gain control and stability

a) **Gain selection.** The device shall provide at least one gain setting no lower than 5 mm/mV. Devices having permanent display capabilities shall provide at least one fixed gain setting (10 mm/mV). This requirement must be met regardless of whether continuously variable gain control is provided.

b) **Gain control.** Continuously variable gain control may be provided, if this mode is clearly indicated on the device control panel and if, in addition, some indication is provided on the recorded output that this option is being used.

c) **Gain switching.** If automatic gain change or switching is provided, the recorded output should indicate whenever this mode has been selected. Any automatic gain switching shall have a manual override.

d) **Gain stability.** The gain change one minute after energizing the device shall not exceed 0.66 percent per minute. The total change in one hour shall not exceed ±10 percent of any available fixed gain setting.

NOTE—Devices that provide simultaneous permanent records and nonpermanent displays need not provide the same gain for both.

4.2.9.6 Time base selection and accuracy

a) Devices with permanent displays shall provide at least one time base (25 mm/s). The time base accuracy shall allow time measurements with an error no greater than ±10 percent for time intervals between 0.2 s and 2 s.

b) For devices with nonpermanent displays, the available time bases shall be disclosed in the labeling. The time base accuracy for any settings shall not vary by more than ±10 percent over the complete display window.

4.2.9.7 Output display

The output display shall accommodate the signals specified in 4.2.9.1, and the device shall comply with the following additional requirements.

a) **Channel width.** The span per channel may be programmable with at least one setting of 30 mm per channel. Note that different aspect ratios must follow requirements of 4.2.9.7(b).

b) **Aspect ratio.** For devices with nonpermanent displays, the aspect ratio shall be 0.4 ± 0.08 s/mV, where aspect ratio is defined as the ratio of vertical sensitivity (in mm/mV) to horizontal sensitivity (in mm/s). For instruments providing several different aspect ratios or adjustable aspect ratios, an aspect ratio of 0.4 ± 0.08 s/mV must be among those provided. At 10 mm/mV and 25 mm/s, for example, the aspect ratio is 0.4.

4.2.9.8 Accuracy of input signal reproduction

a) **Overall system error.** Input signals limited in amplitude to ±5 mV and varying at a rate up to 125 mV/s (as per 4.2.9.1) shall be reproduced on the output recording medium (permanent display) with a maximum deviation from the ideal of ±20 percent or ±100 μV, whichever is greater.

b) **Frequency response.** The monitor shall meet the specifications for two types of input signals, summarized in Table 3. For method A, the output is relative to that obtained with a 5 Hz input signal. For method B, the output response is relative to that obtained for a repetitive, triangular wave input with a base width of 200 ms and a repetition rate of 1 Hz or less. Frequency response testing shall meet both methods A and B (Figure 1).

Single user license only. Copying, networking, and distribution prohibited.

iRhythm, Inc. / Welch Allyn, Inc.
Exhibit 1030
Page 23

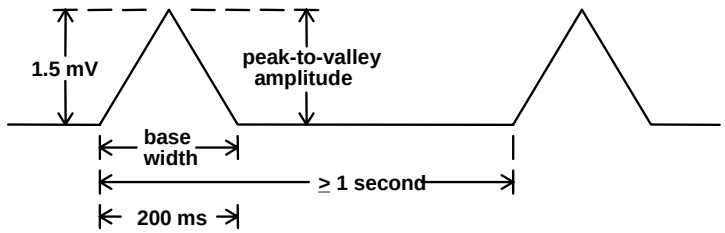

Figure 1—Triangular wave signal (for method B)

Table 3—Frequency response

Method	Input amplitude (mV p-v)	Input frequency and waveform	Relative output response (mm)
A	1.0	0.67 Hz to 40 Hz, sinusoidal	0.67 Hz to 40 Hz bandwidth (3 dB down) Upper limit: 110 % [1)]
B	1.5	1 Hz, 20 ms, triangular	11.25 mm to 15 mm [2)]

[1)] Relative to output with 5 Hz sinusoidal input.

[2)] Relative to output with 200 ms triangular input.

NOTE—The monitor must meet the requirements of both methods A and B.

c) **Impulse response.** The monitor must be able to operate with an extended low-frequency response equivalent to that of a diagnostic electrocardiograph, as specified in applicable document 2.2 (4.2.7.2, Test method D—Impulse response). These requirements are: a 0.3 mVs (3mV for 100 ms) impulse shall not produce a displacement greater than 0.1 mV, nor a slope exceeding 0.30 mV/s following the end of the impulse. Restrictions on the actual shape of this impulse may apply as discussed in test section.

This impulse response requirement is imposed on all monitors. If it is necessary for the monitor to be placed in a particular mode using an operator-selectable control to achieve this extended low-frequency response, an indication of the mode must appear on the recording medium to inform the operator whether the recording has been made with this extended low-frequency response.

NOTE—Extended low-frequency response operation may require the monitor to operate in a non-real-time mode. If so, the manufacturer must disclose the details of time delays.

d) **Lead weighting factors.** Cardiac monitors employing standard leads or Frank leads shall utilize weighting factors and exhibit performance characteristics consistent with those specified in the American National Standard, *Diagnostic electrocardiographic devices* (applicable document 2.2).

e) **Hysteresis.** After a deflection of 15 mm in either direction from the baseline, the hysteresis of the permanent recording system shall not exceed 0.5 mm.

4.2.9.9 Standardizing voltage

A standardizing voltage shall be provided having a value and form that produces a step change in display output whose amplitude is within ±10 percent of the step change amplitude obtained by applying a 1 ± 0.01 mV signal at the appropriate lead. The standardizing voltage shall exhibit a rise time of less than 10 ms and a decay time constant of at least 100 s. The standardizing signal shall be applied to provide an indication of operator adjustment of the gain. The signal shall be applied to all available channels of multi-channel recorders. An alternative waveform for the standardizing voltage is acceptable, and shall consist of a waveform with peak amplitude within ±10 percent of the step amplitude obtained by applying a 1 mV signal at the appropriate lead.

NOTE—Devices providing only one fixed gain and devices that always provide a displayed gain indication for each waveform in all permanent and nonpermanent displays are exempt from the requirement to provide a standardizing voltage.

Single user license only. Copying, networking, and distribution prohibited.

iRhythm, Inc. / Welch Allyn, Inc.
Exhibit 1030
Page 24

4.2.9.10 Common mode rejection

The cardiac monitor shall have the capability of rejecting line frequency signal mode interfering voltages as encountered on the surface of the body. A line frequency signal, with 10 Vrms source and a 200 picofarad (pF) source capacitance, applied from power ground to all patient electrode connections attached to a common node and with a parallel combination of a 51 kilohm resistor and 47 nF capacitor imbalance impedance in series with each patient lead, including the RL or green lead, if supplied (Figure 10), shall not produce an output signal exceeding 1 mV p-v RTI over a 60 s period. The test shall be done while any line frequency notch filter (if provided) is turned off, even if it requires special software or a special method of accessing the control over that filter. This requirement shall be met with sequential shorting of the series-impedance-simulating lead imbalance in each active lead and with a dc offset potential placed in series with any patient electrode connection, as specified in 4.2.9.1. The manufacturer's recommended patient cable shall be used for verification testing.

NOTE—In conducting a test to verify this capability, undesirable stray and leakage capacitance may result from shielding components and from patient cable capacitances when the cable is connected to the voltage source. The test method of 5.2.9.10 takes these capacitances into consideration. See annex C for more details on how to properly build, calibrate, and use the CMR test fixture.

4.2.9.11 Baseline control and stability

a) **Reset.** A 1 V p-v line frequency overload voltage shall be applied for at least 1 s to any lead. After removal of this overload voltage, means shall be available for restoring a 1 mV p-v trace to the recording width of the display within 3 s.

b) **Baseline stability.** One minute after energizing the device and at least 10 s after activation of the reset function—with the patient electrode connections connected through a 25 kilohm resistor—the baseline drift rate at output shall not exceed 10 μV/s RTI over any 10 s period. Drift over temperature shall be less than 50 μV/°C. In addition, the total drift of the device shall not exceed 500 μV RTI over a 1 h period at operating temperature.

4.2.9.12 Pacemaker pulse display capability

The device shall be capable of displaying the ECG signal in the presence of pacemaker pulses with amplitudes and durations as specified in 4.1.4, except that the lower limit for pulse duration shall be 0.5 ms. An indication of the pacemaker pulse shall be visible on the display with an amplitude of no less than 0.2 mV RTI.

4.2.9.13 Synchronizing pulse for cardioversion

If a pulse is accessible to serve as an input synchronizing signal to a cardioverter, the time interval from the R wave peak to the start of the synchronization pulse output must be no greater than 35 ms. Other pulse characteristics of amplitude, duration, shape, and output impedance shall be disclosed.

4.2.9.14 Electrosurgical interference suppression

If the manufacturer claims that the monitor has ESIS, then with the monitor's gain set for 10 mm/mV, using any accessories or settings recommended by the manufacturer, and while receiving a 1 mV simulated ECG signal, the ECG trace shall not disappear from the display. The heart rate shall not change by more than ±10 percent of the rate before electrosurgical interference was activated while the interference is applied for the response time disclosed for 4.1.2.1(f) or 5 s, whichever is longer. This test shall be conducted at a convenient heart rate between 60 bpm and 150 bpm using a simulator whose rate does not vary during electrosurgical interference. This applies during sparking and non-sparking contact of the active electrosurgery electrode. The means of coupling to the monitor and the fraction of electrosurgical machine output for this requirement are defined respectively by Figures 12 and 13B. As in the electrocautery overload tests, the electrocautery unit used must have an operating frequency of 450 kHz ± 100 kHz, and be set for a pure cut power of 300 W and a coagulation power of 100 W.

4.2.10 Electromagnetic compatibility

4.2.10.1 Electromagnetic emissions

Equipment covered by EC13 shall comply with the requirements of CISPR 11, Group 1 (reference document 2.5). Class A limits apply for equipment that will be used only in hospitals and will be powered only by dedicated supply systems. Class B limits apply for equipment that may be used in domestic environments and doctors' offices (and also are acceptable in hospital environments).

4.2.10.2 Electromagnetic immunity

See IEC 60601-1-2 (reference document 2.6).

Single user license only. Copying, networking, and distribution prohibited.

4.2.10.2.1 Immunity to radiated electromagnetic fields

The requirements of IEC 60601-1-2 (which specifically refers to EN61000-4-3) apply.

4.2.10.2.2 Immunity to conducted RF interference

The requirements of IEC 60601-1-2 (which specifically refers to EN61000-4-6) apply.

4.2.10.2.3 Immunity to magnetic fields

The requirements of IEC 60601-1-2 (which specifically refers to EN61000-4-8) apply.

4.2.10.2.4 Immunity to electrostatic discharge

The requirements of IEC 60601-1-2 (which specifically refers to EN61000-4-2) apply. ECG spikes, display glitches, or momentary LED flashes are acceptable during an ESD.

4.2.10.2.5 Power line transients

a) **Fast transients/bursts.** The requirements of IEC 60601-1-2 (which specifically refers to EN61000-4-4) apply. Only transient degradation or loss of functionality is allowed.

b) **Surges.** The requirements of IEC 60601-1-2 (which specifically refers to EN61000-4-5) apply. The instrument may exhibit momentary loss of functionality, but must recover without user intervention.

c) **Voltage dips and short interruptions.** The requirements of IEC 60601-1-2 (which specifically refers to EN61000-4-11) apply.

4.2.11 Summary

Table 4 provides a summary of the performance requirements of this standard.

Table 4—Summary of performance requirements

Section	Requirement description	Min/max	Units	Min/max value
4.2.1	Operating conditions:			
	Line voltage	Range	Vrms	104 to 127
	Line frequency	Range	Hz	50/60 ± 1
	Temperature	Range	°C	10 to 40
	Relative humidity	Range	%	30 to 75
	Atmospheric pressure	Range	mbar	700 to 1060
4.2.2	Overload protection			
4.2.2.1	AC voltage: no damage from differential ac voltage, line frequency, 1 V applied for 10 s	Min	V p-v	1
4.2.2.2	Defibrillator overload protection:			
	Over-voltage	Max	V	5000
	Energy	Max	J	360
	Recovery time	Max	seconds	5
	Energy reduction	Max	%	10
	Charge to operator	Max	µC	100
4.2.3	Risk current (isolated patient connection)	As per applicable document 2.1		
4.2.4	Auxiliary output (if provided)			
4.2.4.1	No damage from short-circuit	Min	minute	1

Single user license only. Copying, networking, and distribution prohibited.

iRhythm, Inc. / Welch Allyn, Inc.
Exhibit 1030
Page 26

Section	Requirement description	Min/max	Units	Min/max value
4.2.4.2	Risk current (isolated patient connection) auxiliary devices attached	As per applicable document 2.1		
4.2.5	Respiration, leads-off sensing and active noise suppression:			
	Risk current (isolated patient connection)	As per applicable document 2.1		
	Direct current any active lead	Max	µA	0.1
4.2.6	QRS detection			
4.2.6.1	Range of QRS wave amplitude and duration—Meet 4.2.7 for pulses of Figure 6:			
	Amplitude	Range	mV p-v RTI	0.5 to 5
	Duration (adult monitor)	Range	ms	70 to 120
	Duration (neonatal/pediatric)	Range	ms	40 to 120
	No response for signals:			
	Amplitude (except for neonatal/pediatric operation)	Max	mV p-v RTI	0.15
	Duration with amplitude of 1 mV (except for neonatal/pediatric operation)	Max	ms	10
4.2.6.2	Line frequency voltage tolerance	Min	µV p-v RTI	100
4.2.6.3	Drift tolerance (0.1 Hz signal on train of QRS signals:			
	Triangular wave amplitude	NA	mV p-v RTI	4
	QRS amplitude	NA	mV p-v RTI	0.5
	QRS duration	NA	ms	100
	QRS repetition rate	NA	bpm	80
4.2.7	Range/accuracy of heart rate meter:			
	Range (adult monitor)	Range	bpm	30 to 200
	Range (neonatal/pediatric monitor)	Range	bpm	30 to 250
	Error: either …	Max	%	±10
	… OR (whichever greater)	Max	bpm	±5
	Indicated rate for signal rate < disclosed rate meter min	Max	bpm	Disclosed min limit
	Indicated rate for signal rate = 300 bpm (adult operation)	Min	bpm	Disclosed max limit
	Indicated rate for signal rate = 350 bpm (neonatal/pediatric operation)	Min	bpm	Disclosed max limit
4.2.8	Alarm system requirement			
4.2.8.1	Alarm limit range:			
	Upper range (adult)	Min	bpm	100 to 200
	Upper range (neonatal/pediatric)	Min	bpm	100 to 250
	Lower range (adult and neonatal/pediatric)	Min	bpm	30 to 100

Single user license only. Copying, networking, and distribution prohibited.

4.2.8.2	Alarm resolution, either …	Min	%	±10
	… OR (whichever greater)	Min	bpm	±5
4.2.8.3	Alarm limit error either …	Max	%	±10
	… OR (whichever greater)	Max	bpm	±5
4.2.8.4	Time to alarm—cardiac standstill	Max	s	10
4.2.8.5	Time to alarm—low heart rate	Max	s	10
4.2.8.6	Time to alarm—high heart rate	Max	s	10
4.2.8.7	Alarm silencing		Provision for silencing and resetting	
4.2.8.8	Alarm disabling		Indication that alarm is disabled	
4.2.9	Monitors with ECG waveform display capability			
4.2.9.1	Input dynamic range:			
	Input signal amplitude	Max	mV	±5
	Rate	Max	mV/s RTI	320
	dc offset voltage	Range	mV	–300 to +300
	Variance in output signal	Max	%	±10
	Inoperability indication	Max	% reduction before indication	50
4.2.9.2	Input impedance: signal reduction (0.67–40 Hz)	Max	%	20
4.2.9.3	System noise	Max	µV p-v RTI	30
4.2.9.4	Multichannel crosstalk: unwanted signal in other channels from applied signal	Max	%	5
4.2.9.5	Gain control and stability:			
	Gain selections			
	—All displays	Min	mm/mV	5
	—Permanent displays	Required	mm/mV	10
	Continuously variable gain control permitted, manual override required			
	Gain change per minute	Max	%/min	0.66
	Total gain change in one hour	Max	%	±10
4.2.9.6	Time base selection and accuracy:			
	Time base selection			
	—Permanent displays	Required	mm/s	25
	—Nonpermanent	NA	mm/s	(Disclose)
	Time base maximum error	Max	%	±10

Single user license only. Copying, networking, and distribution prohibited.

Section	Requirement description	Min/max	Units	Min/max value
4.2.9.7	Output display:			
	Channel width	Min	mm	30
	Aspect ratio	NA	S/mV	0.4
4.2.9.8	Input signal reproduction accuracy:			
	Overall system error: either …	Max	%	±20
	… OR (whichever greater)	Max	µV RTI	±100
	Frequency response			
	(A) Sinusoidal input ...	Range	Hz	0.67 to 40 (–3dB attenuation)
	… AND			
	(B) Response to a 20 ms wide triangular input …	Range	%	0 to 25 reduction in peak amplitude
	Impulse response to 0.3 mV/s impulse outside region of impulse			
	Displacement	Max	mV RTI	0.1
	Slope	Max	mV/s RTI	0.30
	Electrode weighting factors	As per applicable document 2.2		
	Hysteresis after 15 mm deflection	Max	mm	0.5
4.2.9.9	Standardizing voltage		See 4.2.9.9	
4.2.9.10	Common mode rejection (allowable noise for 10 Vrms, line frequency)	Max	mV p-v RTI	1
4.2.9.11	Baseline control and stability			
	Return time after reset	Max	S	3
	Drift rate in 10 seconds	Max	µV/s RTI	10
	Baseline drift rate in one hour	Max	µV RTI	500
	Drift over temperature	Max	µV/°C RTI	50
4.2.9.12	Pacemaker pulse: indication— ECG signal display in presence of pacemaker pulses of amplitude ±2 mV to ±700 mV, duration 0.5 ms to 2 ms, maximum rise time of 100 µs, and frequency of 100 pulses per minute.	Min	mV RTI	0.2
4.2.9.13	Synchronizing pulse: time interval from R wave peak to sync pulse output, plus disclose amplitude, duration, and output Z	Max	ms	35
4.2.9.14	Electrosurgical interference suppression: change in heart rate, relative to pre-interference rate	Max	%	±10

Single user license only. Copying, networking, and distribution prohibited.

4.2.10	Electromagnetic compatibility:	
	Electromagnetic emissions	As per applicable document 2.5
	Electromagnetic immunity (radiated fields, conducted RF, magnetic fields, electrostatic discharge, power line transients)	As per applicable document 2.6

5 Test methods

This section provides referee test methods and procedures by which compliance of the device with the requirements of section 4 are verified. The paragraph numbers below correspond with those of section 4 except for the first digit (e.g., conformance with the requirement of 4.2.3 can be determined by the test method of 5.2.3).

NOTE—Other tests may be used for purposes of design qualification, provided that equivalence with the referee tests can be established in terms of comparability of test results. These referee tests are not intended for use in verifying the performance of individual devices, either for purposes of quality assurance inspections by the manufacturer or for purposes of routine in-hospital inspections by the device user.

Where compliance with certain of the requirements can be established by visual inspection or manual operation of switches and controls, this is so noted. General instrumental and procedural requirements for conducting the tests are provided below.

Test conditions

Unless otherwise specified, all measurements and tests shall be performed at the standard operating conditions specified in 4.2.1. During testing of battery-powered units, the battery voltage shall be within the manufacturer's specifications. Measurement tolerances are ±1.4 °C for temperature and ±5 percent for humidity.

Test apparatus

Instrumentation. The following test instruments will be required:

a) An oscilloscope with a dual channel capability and with a differential input amplifier having an input impedance of at least 1 megohm and an amplitude resolution of 10 μV. The 3 dB frequency response must be at least dc to 1 MHz, with a mid-band amplitude accuracy of ±5 percent.

b) A voltmeter capable of measuring dc voltages in the range of 10 V to 1 mV with an accuracy of ±1 percent and having appropriate frequency characteristics for the test signals; and a voltmeter or p-v amplitude detector able to measure p-v sinusoidal and triangular signals with an accuracy of ±1 percent in a voltage range of 10 V to 0.1 V.

c) Two signal generators capable of generating sinusoidal, square wave, and triangular waveforms with frequencies ranging from 0.05 Hz to 1000 Hz. The signal generators must have adjustable voltage outputs up to at least 10 V p-v that are balanced and isolated from the ground.

d) A high-voltage power supply and power resistor capable of charging a 32 μF capacitor to 5000 V in less than 20 seconds.

Test waveform generation

The waveforms described in Figures 3 and 4 are derived from ECGs obtained from patients.

The test waveform amplitude at the input of the cardiac monitor is to be set at the specified values with an error no greater than ±2 percent or ±15 μV, whichever is greater.

The R-R interval (time between successive R waves) for the specified heart rate shall be set with an error no greater than ±1 percent of the specified value or ±5 ms, whichever is greater.

Test circuits

Unless otherwise specified, the circuits described in the tests shall be made with resistors having a ±1 percent tolerance for frequencies up to 1 mHz. Capacitors shall be non-polarized, of suitable voltage rating, and have a tolerance of ±5 percent. Inductors also shall have a ±5 percent tolerance. Annex C and annex D respectively provide more detailed information about building and using the CMR test circuit and pacer pulse generation test circuit.

Single user license only. Copying, networking, and distribution prohibited.

Test procedure

Unless otherwise specified by the manufacturer, all tests are to be performed with the LA patient electrode connection attached to the signal source, and all others, including any reference electrode, are to be connected to signal ground. The monitor in this mode should be switched to the standard Lead I position. If there is no lead selector, the (+) electrode is the signal source. The tests should be performed to minimize extraneous noise interference and pickup, in accordance with good practice in recording clinical electrocardiograms. These practices include:

a) routing ECG cables to minimize the area between electrode cables;

b) balancing the oscilloscope probes and placing them to minimize extraneous interference pickup when measuring differential voltages in the mV and μV range; and

c) constructing test circuits in shielded boxes, where feasible, and wiring them to minimize noise.

Response time and alarm time measurements shall begin at the onset of the first R wave following a changed R-R interval, and end when the appropriate response (e.g., heart rate meter reading or alarm activation) occurs. For the test measuring time-to-alarm for cardiac standstill, this time interval shall be measured from the beginning of the last QRS wave to alarm activation, and 0.75 seconds shall be subtracted from the measurement.

Gain or sensitivity controls affecting heart rate detection are to be adjusted at the beginning of each test sequence (where appropriate), according to the manufacturer's disclosed instructions. These controls are not to be adjusted during the test unless specified in the test procedure.

Test signals and output measurement

Unless otherwise specified, input test signal amplitudes shall be set so that errors do not exceed ±1 percent of the specified value for dc voltages or voltage steps. Triangular or sinusoidal test voltages shall be set within ±2 percent of the specified p-v value.

Measurement of the output signal shall be made with the paper that is generated by the direct writer or, where appropriate, from a fixed-signal image on the oscillographic screen. When necessary, a photograph of the signal, with a superimposed, known graticule in the vertical and horizontal directions, may be used. Where a requirement or test is specified in μv RTI, the corresponding output in mm is obtained by multiplying the μV value by the device gain expressed in mm/mV and dividing by 1000. Distance measurements on the output traces must be made with a linear optical enlarger with a scale accurate to 0.1 mm; distances shall be expressed to the nearest 0.1 mm. Since the line thickness of the output trace may be as much as 1 mm, care must be taken to measure distance from points on the same edge of the trace. Figure 7 shows an example of amplitude and time measurement.

5.1 Compliance with the labeling requirements

5.1.1 Device markings

Compliance with all of the requirements of 4.1.1 can be verified by visual inspection.

5.1.2 Operator manual

5.1.2.1 Disclosure of performance specifications

a) **Electrosurgery and diathermy protection.** The disclosure requirement of 4.1.2.1(a) can be verified by inspection. When protection against malfunction caused by electrosurgery is claimed, the following test, using any accessories or settings recommended by the manufacturer, shall be applied. See Figures 12 and 13A.

WARNING: Be aware that the circuits of Figures 13A and 13B, and the entire ECG system and cable of the monitor under test, all have dangerous voltages present on them whenever the electrocautery unit is enabled. Users should take proper precautions.

1) Test in cut mode:

Set the cut output power of the electrosurgical equipment for 300 W, and select a pure cut mode (no blend).

With cut mode active, touch the metal contact/block in the test setup (see Figure 12) with the probe electrode and remove the electrode slowly to get an arc.

Repeat the procedure five times.

Single user license only. Copying, networking, and distribution prohibited.

2) Test in coag mode:

Repeat the test in item 1 above except with coag mode active and its output power set to 100 W. (Test of any spray coag mode is excluded.)

This test is virtually a copy of its counterpart in the final draft amendment to IEC 60601-2-25 Ed.1 (reference document 2.8).

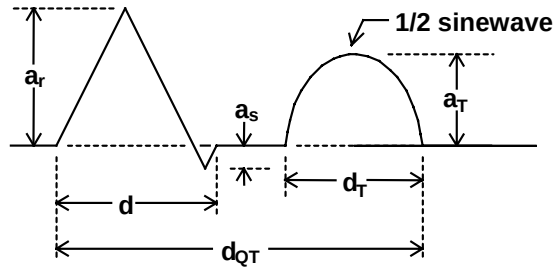

a) Definitions of waveforms (QRS geometry defined in Figure 6).

b) Reference QRS-T signal with a_T= 0.4 mV

c) Tall T-wave with a_T= 1.2 mV

Figure 2—Test waveforms for T-wave rejection capability

b) **Respiration, leads-off sensing, and active noise suppression.** Performance specifications to be disclosed can be tested by 5.2.5.

c) **Tall T-wave rejection capability.** A 20 s interval between tests is acceptable to allow the monitor under test to stabilize. Tests must be performed with the monitor at the nominal gain setting of 10 mm/mV for devices with permanent displays. If the device does not provide a permanent display, the gain setting must be specified at the time of test.

1) Apply the test waveform of Figure 2a to the input of the monitor, with the parameters specified in 4.1.2.1(c) and 4.2.6.1 (1 mV QRS, 100 ms QRS duration, 80 bpm).

2) Record the indicated heart rate when the amplitude of the T-wave (a_T) is zero.

3) Increase a_T in steps of 0.2 mV, at the rate of one step per minute, up to 1.2 mV, until either the indicated heart rate exceeds the allowed ±10 percent tolerance or erratic heart rate indication is obtained. The highest value of a_T for which the heart rate meter indicates 80 ± 8 bpm shall be no less than the value of a_T disclosed by the manufacturer. If the manufacturer indicates that performance is affected by monitoring versus extended low-frequency bandwidth choice, check at both bandwidths.

d) **Heart rate averaging.** Compliance with 4.1.2.1(d) can be verified by inspection.

Single user license only. Copying, networking, and distribution prohibited.

iRhythm, Inc. / Welch Allyn, Inc.
Exhibit 1030
Page 32

e) **Heart rate meter accuracy and response to irregular rhythm.** A 20 s interval between tests is acceptable to allow the monitor to stabilize. The test waveforms of Figure 3 are available in MIT format. In those files, for Figures 3a–3c, 60 s records are provided, and for Figure 3d, a 48 s record is provided.

1) Apply the test waveform of Figure 3a to the input of the monitor.

2) The indicated heart rate shall agree with the manufacturer's disclosed value.

3) Repeat steps e) 1) and e) 2) for the waveforms shown in Figures 3b, 3c, and 3d.

NOTE—Gain or sensitivity controls may be adjusted for each waveform.

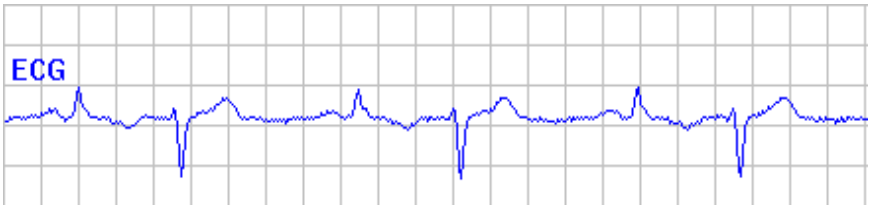

3a Ventricular bigeminy—The total duration for the double complex is 1500 ms; the rate is 80 bpm if all QRS complexes are counted and 40 bpm if only the larger R waves or S waves are counted.

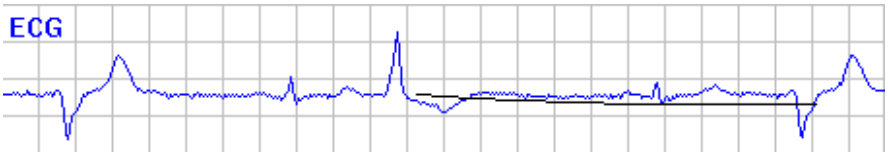

3b Slow alternating ventricular bigeminy—The rate is 60 bpm if all QRS complexes are counted and 30 bpm if only the large complexes are counted.

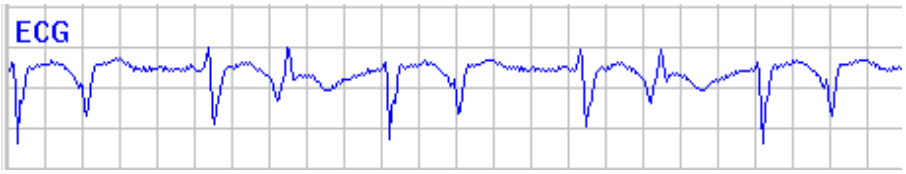

3c—Rapid alternating ventricular bigeminy—The rate is 120 bpm if all QRS complexes are counted.

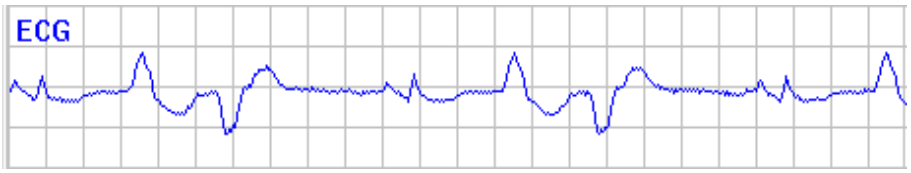

3d Bidirectional systoles—The heart rate is 90 bpm if all QRS complexes are counted and 45 bpm if only large complexes are counted.

This figure is alternating QRS complexes for testing pattern recognition capability of cardiac monitors. Amplitude scale is 100 µV/mm; duration scale is 40 ms/mm. Waveforms modified from Lindsay and Budkin (1970), p. 92.

Figure 3—Test waveforms for verifying heart rate accuracy

Note—The disclosure requirement of 4.1.2.1(e) leaves determination of the correct heart rate indication for a specific monitoring application to the user's judgment.

Single user license only. Copying, networking, and distribution prohibited.

iRhythm, Inc. / Welch Allyn, Inc.
Exhibit 1030
Page 33

f) **Response time of heart rate meter to change in heart rate.**

1) Apply a test waveform that reliably triggers the QRS detector.;

2) Set the repetition rate to 80 bpm and record the heart rate indication after reaching steady state.

3) Change the rate to 120 bpm and record the steady-state heart rate indication.

4) Compute 37 percent of the value recorded in step 2 and add it to 63 percent of the value recorded in step 3.

5) Reapply the 80 bpm test waveform and allow the device to reach a steady state.

6) Then, suddenly change the rate to 120 bpm.

7) Time the interval from the rate change to the first displayed heart rate equal to or greater than the computed rate of step 4.

8) This time, interval shall agree with the manufacturer's disclosed value.

9) Repeat steps 1 through 8 for a step change in rate from 80 bpm to 40 bpm; time the interval from the rate change to the first displayed heart rate equal to or less than the computed rate of step 4.

NOTE—Each test shall be repeated five times and the results disclosed as the average and range for the five trials.

g) **Time to alarm for tachycardia.** The test waveforms of Figure 4 are available from AAMI. In those files, the following signals are included:

For Figure 4a, 30 seconds of 80 BPM triangular QRS pulses are followed by 60 seconds of Figure 4a's VTACH at 1X gain;

(then) 30 seconds of 80 bpm triangular QRS pulses are followed by 60 seconds of Figure 4a's VTACH at .5X gain; and

(then) 30 seconds of 80 bpm triangular QRS pulses are followed by 60 seconds of Figure 4a's VTACH at 2X gain.

For Figure 4b, 30 seconds of 80 bpm triangular QRS pulses are followed by 60 seconds of Figure 4b's VTACH at 1X gain;

(then) 30 seconds of 80 bpm triangular QRS pulses are followed by 60 seconds of Figure 4b's VTACH at .5X gain; and

(then) 30 seconds of 80 bpm triangular QRS pulses are followed by 60 seconds of Figure 4b's VTACH at 2X gain.

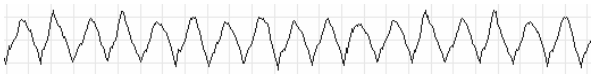

a) Ventricular tachycardia; amplitude is 1 mV p-v and heart rate is 206 bpm.

Grid = 0.2 s, 0.5 mV.

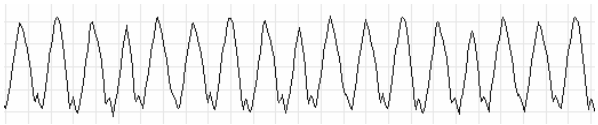

b) Ventricular tachycardia; amplitude is 2 mV p-v and

heart rate is 195 bpm. Grid = 0.2 s, 0.5 mV.

Figure 4—Test waveforms for ventricular tachycardia (modified from Lindsay and Budkin, 1970)

Single user license only. Copying, networking, and distribution prohibited.

iRhythm, Inc. / Welch Allyn, Inc.
Exhibit 1030
Page 34

1) Apply the test waveform of 4.2.6.1 and Figure 6 to the monitor input, with the QRS amplitude set at 1.0 mV and the duration at 100 ms.

2) Set the rate at 80 bpm, the upper alarm limit closest to 100 bpm, and the lower alarm limit closest to 60 bpm.

3) Suddenly change the input signal to the waveform of Figure 4a.

4) Measure the time interval until the alarm is activated.

5) The time interval shall not exceed the manufacturer's disclosed value.

6) Repeat steps 1 through 5 with the amplitude of the waveform in Figure 4a halved and doubled.

7) Repeat steps 1 through 6 for the waveform of Figure 4b.

NOTE—Each test shall be repeated five times and the results disclosed as the average and range for the five trials.

h) **Pacemaker pulse rejection warning label.** Compliance with the requirement of 4.1.2.1(h) can be verified by inspection.

i) **Audible alarm disclosure.** Compliance with 4.1.2.1(i) can be verified by inspection.

j) **Visual alarm disclosure.** Compliance with 4.1.2.1(j) can be verified by inspection.

k) **Battery-powered monitors.** Compliance with 4.1.2.1(k) can be verified by inspection of parameters disclosed by the manufacturer.

l) **Telemetry.** Compliance with 4.1.2.1(l) can be verified by inspection.

m) **Line isolation monitor transients.** Compliance with 4.1.2.1(m) can be verified by inspection.

n) **Special disclosure requirements for monitors with nonpermanent ECG waveform display.** Compliance with 4.1.2.1(n) can be verified by inspection.

o) **Electrode polarization.** Compliance with 4.1.2.1(o) can be verified by inspection.

p) **Auxiliary output.** Compliance with 4.1.2.1(p) can be verified by inspection.

q) **Alarm silencing.** Compliance with 4.1.2.1(q) can be verified by inspection.

5.1.2.2 Application notes

Compliance with the requirements of 4.1.2.2 can be verified by inspection.

5.1.3 Service manual

Compliance with 4.1.3 can be verified by inspection.

5.1.4 Pacemaker pulse rejection capability

Annex D contains detailed information on one possible implementation of a circuit to shape pacer pulses and generate overshoots sufficient to do all pacer pulse testing.

Single user license only. Copying, networking, and distribution prohibited.

iRhythm, Inc. / Welch Allyn, Inc.
Exhibit 1030
Page 35

a) Apply the waveform of Figure 5b to the monitor input, with the QRS and T-wave set to the shape specification in Figures 2a and 6 and with QRS amplitude set at 1 mV, QRS duration at 100 ms, T-wave amplitude at 0.2 mV, T-wave duration at 180 ms, QT interval at 350 ms, and R-R interval at 1000 ms. The pacemaker pulse parameters shall be those specified in 4.1.4.1 for rejection without overshoot, with a_p = 2 mV and d_p = 2 ms.

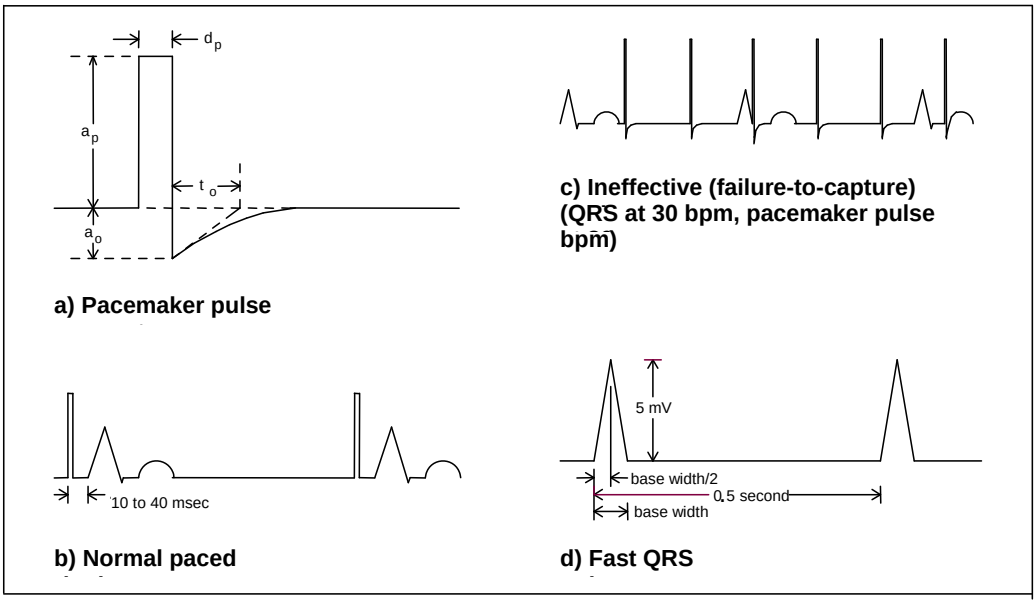

Figure 5—Pacemaker pulse test waveforms

b) The detector gain or sensitivity control, if provided, may be adjusted only at this point in the test sequence.

c) Verify that the indicated heart rate agrees with the values disclosed by the manufacturer.

d) Remove the QRS and T-wave signal, and verify that the indicated heart rates agree with those disclosed by the manufacturer.

e) Repeat the above four steps for pacemaker pulse amplitudes (a_p) of –2 mV, +700 mV, and –700 mV.

f) Apply the test waveform of Figure 5c to the monitor input with the same parameters as in step (a) except that the heart rate is set at 30 bpm and the pacer rate at 80 bpm. (It is required that the QRS rate and pacing rate differ sufficiently that the pacer pulses drift through each portion of the ECG waveform during this test.)

g) Apply a pulse with amplitude and duration identical to the ventricular pacing pulse, but preceding the latter by 150 ms, and repeat steps (a) through (f) with both pulses present.

h) Repeat step (g) using a 250 ms instead of 150 ms interval between the pacing pulses.

i) Verify that the indicated heart rate agrees with the manufacturer's disclosed value.

j) Repeat steps (f) and (g) for a_p of –2 mV, +700 mV, and –700 mV.

k) Repeat the entire test sequence for pacemaker pulses having the parameters specified in 4.1.4.2 for rejection with overshoot. The amplitude of overshoot may be set based on either method A (= 0.025 a_p to 0.25 a_p, but not to exceed 2 mV, independent of time constant), method B (= $a_p d_p / t_o$), or both, as defined in 4.1.4.2. If desired, the optional test circuits of annex D may be used to generate these pulses.

l) Repeat the entire test sequence for d_p = 0.1 ms.

Single user license only. Copying, networking, and distribution prohibited.

iRhythm, Inc. / Welch Allyn, Inc.
Exhibit 1030
Page 36

m) If the manufacturer's specifications for the monitor do not encompass the full pacemaker pulse (±2 mV to ±700 mV) and duration range (0.1 ms to 2 ms), the above tests shall be performed using the amplitudes and durations specified by the manufacturer.

n) Apply the waveform of Figure 5d to the monitor input. Beginning with a base width of 30 ms, decrease the base width until the monitor indicates pacer pulses are being detected. Adjust the base width until approximately 50 percent of the pulses are indicated as pacer pulses. Slew rate in V/s is equal to 10 divided by base width in ms. Verify that the monitor pacer detector's behavior matches that disclosed.

o) Compliance with 4.1.4.4 can be verified by inspection.

p) Compliance with 4.1.4.5 can be verified by inspection.

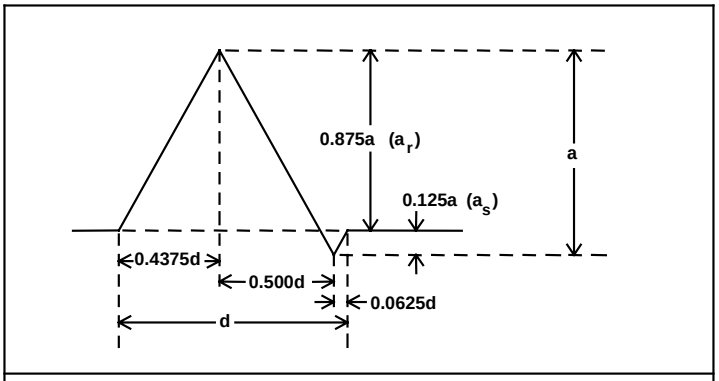

QRS amplitude is noted by a; a_r is 0.875a, and a_s is 0.125a.

Figure 6—Test signal simulating the QRS complex of the ECG

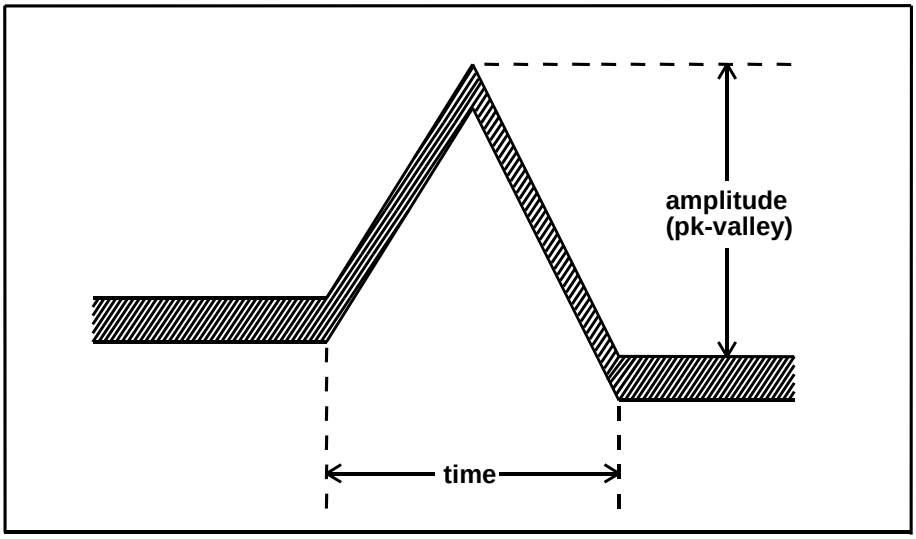

Figure 7—Example of time and amplitude measurement

Single user license only. Copying, networking, and distribution prohibited.

iRhythm, Inc. / Welch Allyn, Inc.
Exhibit 1030
Page 37

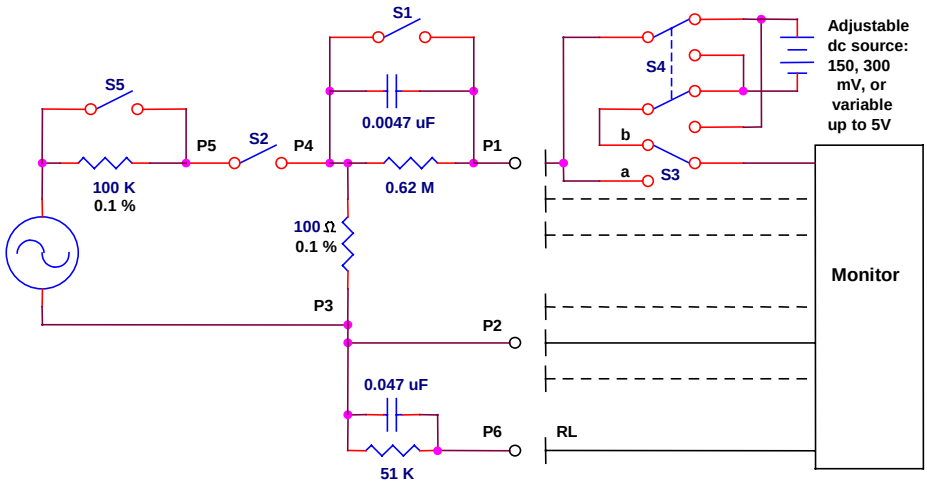

NOTE— **The 100 ohm and 100 kilohm resistors are 0.1 percent so as to provide an accurate voltage division.** S5 is closed for the test of 5.2.2.1; otherwise, S5 is open.

Figure 8—General test circuit

5.2 Compliance with the performance requirements

5.2.1 Operating conditions

The environmental operating conditions are recorded and checked against the values specified in 4.2.1. Standard recording conditions for the device shall comprise a gain setting of 10 mm/mV and a time base (where applicable) of 25 mm/s for permanent displays; all mode switches shall be set to “monitor” positions; and the lead selector, if any, shall be in the Lead I position. Tests shall be performed after a warm-up period of at least 15 minutes, unless otherwise indicated. Compliance with the specified line voltage range is demonstrated if the device meets all requirements of this standard at a line voltage as low as 104 V and as high as 127 Vrms.

5.2.2 Overload protection

The following tests shall be conducted with patient electrode connections and lead selector switch in each of the configurations, as applicable, of Table 5.

5.2.2.1 AC voltage

a) Connect the device to the test circuit of Figure 8, with switches S1 and S5 closed and S2 open. Note that the RL lead, if supplied, is treated as another patient lead with the R,C in series to simulate imbalance caused by electrode-skin impedance.

b) Connect a 1 V p-v, line frequency voltage, with source impedance no greater than 5 ohms at line frequency, between P5 and P3.

c) Close switch S2 for 10 seconds.

d) Disconnect the overload voltage. If necessary, the reset mechanism of the device may be activated.

e) Repeat the above overload sequence at least twice more within 5 minutes.

f) At the conclusion of the overload procedures, the device must meet all of the requirements of this standard.

Single user license only. Copying, networking, and distribution prohibited.

iRhythm, Inc. / Welch Allyn, Inc.
Exhibit 1030
Page 38

5.2.2.2 Defibrillator overload protection

For this test, the manufacturer's recommended patient cable should be used. Meeting this requirement also dictates using an ECG cable that passes the test methods of EC53, Section 5.5.3 (reference document 2.4).

NOTE—The test circuits shown in Figures 9A and 9B for producing simulated defibrillator pulses must be constructed and used with great caution to avoid danger to test personnel. It may be necessary to connect two 50 ohm resistors in series to obtain a test load of 100 ohms. This must be done carefully since the node connection of the resistors is at or near one-half of full defibrillator voltage. There is also a possibility that chassis-connected parts of the monitor will become hot.

5.2.2.2.1 Recovery

a) Connect the monitor to the test circuit of Figure 9A, with the patient electrode connections in each of the configurations of Table 5, as appropriate for the lead set used. A defibrillator test load of 100 ohms or its equivalent must be used (IEC 60601-2-27, Section 51.101.1, reference document 2.7).

b) The monitor is operated at the standard gain and normal frequency response, so that the 10 Hz test signal is clearly visible when switch S2 is opened (IEC 60601-2-27, Section 51.101.1, reference document 2.7).

c) Charge the capacitor to 5000 V, with switch S1 in position A and switch S2 closed. Discharge is accomplished by actuating S1 to position B for a period of 200 ± 100 ms. The capacitor must be disconnected to remove residual voltages and allow recovery to commence. The discharge test is applied at 20 s intervals in those cases where more than one discharge is indicated (see last column of Table 5; see also IEC 60601-2-27, Section 51.101.1, reference document 2.7).

d) For those tests where the power ground of the device is to be connected to P2, but no such power ground is available (e.g., in the case of battery-powered or doubly-insulated equipment), connect P2 to the chassis of the device. If the chassis is a metal conductor, direct electrical connection can be made. If it is a nonconducting enclosure, metal foil or a conducting pad (e.g., a disposable electrosurgery ground plate) can be used to produce electrical contact with the device enclosure (IEC 60601-2-27, Section 51.101.2, reference document 2.7).

e) Immediately after the last discharge for each lead combination, open S2 so that the 10 Hz test signal can be applied.

f) After 5 seconds, verify that the device correctly displays the test signal at an amplitude of at least 80 percent of the normal amplitude.

g) After this test, the device shall meet the requirements of 4.2.3 through 4.2.10.

Single user license only. Copying, networking, and distribution prohibited.

iRhythm, Inc. / Welch Allyn, Inc.
Exhibit 1030
Page 39

Table 5—Lead combinations and number of defibrillator discharge tests

(Reference IEC 60601-2-27, Table 101)

	P1	P2	Lead setting	# of tests
5 electrode cables	LA	RA, LL, RL, V	I	1
	RA	LL, LA, RL, V	II	1
	LL	LA, RA, RL, V	III	1
	RL	LA, RA, LL, V	Standby	1
	V	LA, RA, LL, RL	V	1
	All patient electrode connections	Power ground or chassis	I	1
3 electrode cables	LA	RA, LL (or RL)	I	2
	RA	LA, LL (or RL)	I	2
	LL (or RL)	RA, LA	II or Standby	2
	All patient electrode connections	Power ground or chassis	I	1
2 electrode cables	LA	RA	I	3
	All patient electrode connections	Power ground or chassis	I	1

NOTE—Wait at least 15 minutes before repeating the test sequence to prevent excessive temperature rise in clamping resistors.

CAUTION—Test personnel must take care to avoid injury from the high voltages and currents generated by these tests.

Legend for 5 electrode ECG cables:

LA (left arm)	Black
RA (right arm)	White
LL (left leg)	Red
RL (right leg)	Green
V (chest)	Brown

Single user license only. Copying, networking, and distribution prohibited.

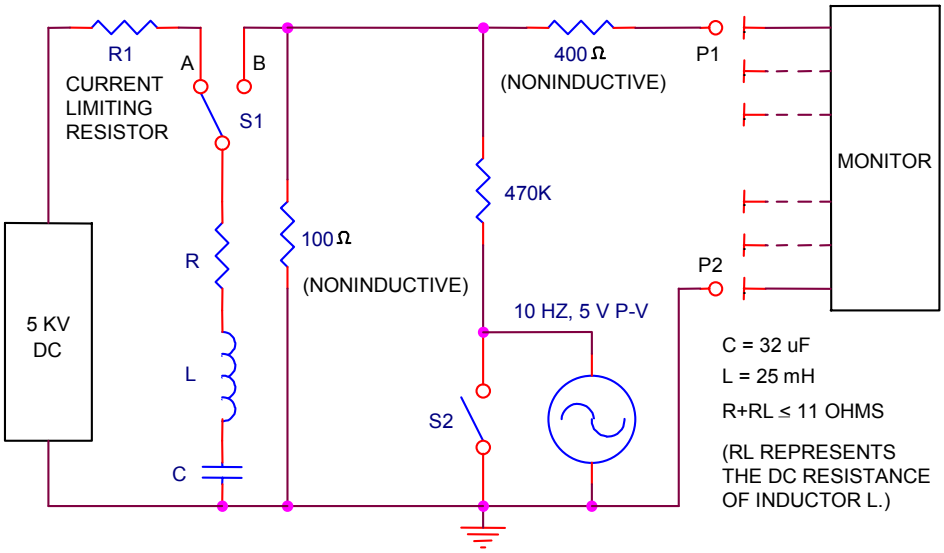

Figure 9A—Test circuit for defibrillator overload tests (5.2.2.2.1 and 5.2.2.2.2)

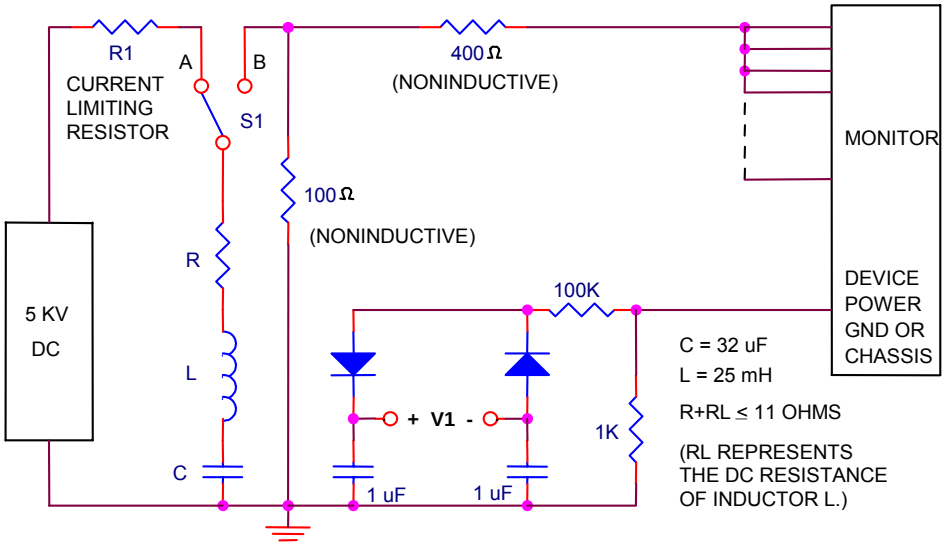

Figure 9B—Test circuit for operator safety test (5.2.2.2.3)

NOTE 1—The values of R, L , and C may be varied so long as the waveform conforms to the limits specified in applicable document 2.3.

NOTE 2—The manufacturer's recommended patient cable shall be used.

NOTE 3—The 470 K resistor of 9 A must withstand 5 KV. Using ten 47 K, 1/8 W resistors in series should suffice.

NOTE 4—The switch S1 must withstand peak currents of 60 A in the closed position, and in the open position it must not break down for voltages up to 5000 V.

Single user license only. Copying, networking, and distribution prohibited.

iRhythm, Inc. / Welch Allyn, Inc.
Exhibit 1030
Page 41

5.2.2.2.2 Reduction in energy delivered to the patient

a) Reconnect the monitor to the test circuit of Figure 9A, discharge the test circuit, and measure the energy delivered to the defibrillator tester.

b) Remove the connections from the monitor to P1 and P2, and discharge the test circuit.

c) Verify that the energy delivered to the 100 ohm load in (a) is within 10 percent of that delivered in (b).

5.2.2.2.3 Operator safety

NOTE—If the ECG cable supplied by the manufacturer contains any exposed metal at its monitor end, including a metal shroud that is normally not exposed by virtue of being fully inserted into its mating receptacle, or if the mating connector has any exposed metal, this test applies regardless of the presence or absence of any power line connection. If the ECG cable's plug or mating connector has no such exposed metal, the following test is required only for monitors that can be battery powered. In the absence of such exposed ECG cable metal, it is assumed that ac-only monitors always would be connected to a power line when connected to a patient.

a) Turn the monitor off and disconnect all cables that might otherwise provide a path from the monitor to ground (e.g., modem connections). Connect the monitor as shown in Figure 9B, where the "device power ground or chassis" connection is made as described in 5.2.2.2.1(d).

b) Discharge the test circuit and verify that the magnitude of the voltage V1 in Figure 9B is less than 1 V. Verification shall be performed with a test instrument having an input impedance of at least 10 megohms.

c) Repeat steps (a) and (b) above with the monitor turned on and disconnect all cables that might otherwise provide a path from the monitor ground.

d) If any part of the ECG cable-to-monitor interface has an exposed metal or potentially exposed metal shroud, repeat steps a and b except that the junction of the 1 KΩ and 100 KΩ resistors in Figure 9B must be connected only to such exposed and/or potentially exposed metal during the test. This is effectively consistent with the requirements EC53, Section 4.5.1 (applicable document 2.4).

5.2.3 Leakage current

The test methodology for determining risk current levels is provided in the American National Standard, *Safe current limits for electromedical apparatus* (applicable document 2.1).

5.2.4 Auxiliary output

5.2.4.1 If the device is provided with an auxiliary output, this output shall be short-circuited for at least one minute, with the device in the standard operating mode but the chart recorder (if applicable) not activated. Upon removal of the short circuit, the device shall meet all of the requirements of this standard.

5.2.4.2 With the auxiliary output connected either as specified by the manufacturer or as simulated by a resistor equivalent to the drive capability specified for the auxiliary device, all risk currents shall be within the allowable limits specified for isolated patient connections in the American National Standard, *Safe current limits for electromedical apparatus* (applicable document 2.1).

5.2.5 Respiration, leads-off sensing, and active noise suppression

Currents intentionally introduced into the electrode leads shall be measured by the test procedures of the American National Standard, *Safe current limits for electromedical apparatus* (applicable document 2.1). The measured values for the risk currents shall not exceed the manufacturer's disclosed values. For each patient electrode connection, the dc component can be measured by connecting a 100 kilohm resistor between that patient electrode connection and a node in common with all other patient electrode connections. The dc voltage across any resistor must not exceed 10 mV for a patient electrode connection that serves as an amplifier input, or 100 mV for any other patient electrode connection. This measurement must be made with each patient electrode connection.

5.2.6 QRS detection

5.2.6.1 Range of QRS wave amplitude and duration

a) Apply the test waveform specified in 4.2.6.1 and Figure 6 to the monitor leads via the circuit of Figure 8. Switches S1 and S2 are closed, switch S5 is open, and switch S3 is in position a. Record the indicated heart rate.

Single user license only. Copying, networking, and distribution prohibited.

iRhythm, Inc. / Welch Allyn, Inc.
Exhibit 1030
Page 42

b) Run this test for all combinations of the following waveform parameters:

1) 0.5, 2, and 5 mV QRS amplitude;

2) 70, 100, and 120 ms duration (40, 80, and 120 ms for neonatal/pediatric monitors);

3) 30, 80, and 200 bpm heart rate (30, 80, 250 bpm for neonatal/pediatric monitors); and

c) In all cases, the indicated heart rate shall be within ±10 percent or ±5 bpm, whichever is greater, of the applied rate.

d) Apply the above waveform with a QRS amplitude of 0.15 mV for all combinations of maximum and minimum duration and heart rate. The monitor shall not respond to this waveform unless the device is a neonatal/pediatric monitor.

e) Repeat step (d) for the waveform having a QRS amplitude of 1.0 mV and a duration of 10 ms at maximum and minimum heart rates. The monitor shall not respond to this waveform unless the device is a neonatal/pediatric monitor.

NOTE—Gain or selectivity controls may be adjusted for each waveform.

5.2.6.2 Line frequency voltage tolerance

a) Apply the test waveform of 4.2.6.1 and Figure 6 to the monitor input.

b) Set the QRS amplitude to 0.5 mV, the duration to 100 ms, and the repetition rate to 80 bpm.

c) Record the indicated heart rate.

d) Superimpose a 50 μV p-v RTI line frequency voltage onto this signal.

e) Increase the amplitude of this voltage until the indicated heart rate exceeds the allowable ±10 percent tolerance.

f) This voltage amplitude shall be 100 μV p-v RTI or greater.

5.2.6.3 Drift tolerance

a) Apply the test waveform of 4.2.6.1 and Figure 6 to the monitor input.

b) Set the QRS amplitude to 0.5 mV, the duration to 100 ms, and the repetition rate to 80 bpm.

c) Record the indicated heart rate.

d) Superimpose a 0.1 Hz, 4 mV p-v, triangular waveform on the QRS signal; verify that the heart rate remains within 80 ± 8 bpm.

5.2.7 Range and accuracy of heart rate meter

a) Apply a triangular waveform, as shown in Figure 6, of 1 mV amplitude and 70 ms duration to the monitor input.

b) Set the repetition rate to the minimum rate of the device, as disclosed by the manufacturer (this applied rate shall be 30 bpm or less, but not zero).

c) The indicated heart rate shall be within ±10 percent or ±5 bpm, whichever is greater, of the input rate. If the manufacturer claims higher accuracy, the indicated heart rate shall be within the manufacturer's specified error range.

d) Repeat steps (a) through (c) for the maximum rate of the device (i.e., at least 200 bpm for adult monitors, at least 250 bpm for monitors labeled for use with neonatal/pediatric patients) and for four intermediate rates of 60, 100, 120, and 180 bpm.

e) Repeat steps (a) and (b) for input rates of zero and of 25 percent and 50 percent of the disclosed minimum rate. The indicated heart rate shall not exceed the disclosed minimum of the meter range.

f) Repeat step (d) for an input rate of 300 bpm, and for an input rate that is one-half the sum of 300 bpm and the disclosed maximum rate. For neonatal/pediatric monitors, these rates are 350 bpm and an input rate one-half the sum of 350 bpm and the disclosed maximum rate. The indicated heart rate shall not be less than the disclosed maximum of the meter range.

Single user license only. Copying, networking, and distribution prohibited.

NOTE—Gain or sensitivity controls may be adjusted for each input rate.

5.2.8 Alarm system

5.2.8.1 Alarm limit range

Verify the range of upper alarm limit settings (at least 100 bpm to 200 bpm for adult monitors, 100 bpm to 250 bpm for monitors labeled for use with neonatal/pediatric patients) and the lower alarm limit settings (at least 30 bpm to 100 bpm for both adult and neonatal/pediatric monitors).

5.2.8.2 Resolution of alarm limit settings

Compliance with 4.2.8.2 can be verified by inspection.

5.2.8.3 Alarm limit accuracy

a) Set the lower alarm limit (R_s) closest to 60 bpm.

b) Apply a triangular waveform, as shown in Figure 6, of 1 mV amplitude and 70 ms duration to the monitor input.

c) Set the rate of the test signal high enough (as determined by a rate meter) to avoid activation of the alarm.

d) Decrease the repetition rate, in steps of 1 bpm with a 10 s delay between each step, until the alarm is activated.

e) Measure this rate (R_d) on the monitor display meter.

f) Compute the alarm limit error (e_d):

$$e_d = 100 \times \left| \frac{R_d - R_s}{R_s} \right|$$

where:

R_d = the displayed heart rate at which the alarm threshold is reached

R_s = the alarm limit setting

g) This value of e_d should not exceed 10.

h) Repeat steps (a) through (g) for a lower alarm limit setting closest to 30 bpm. The value of e_d should not exceed 17.

i) Repeat steps (a) through (h) for the upper alarm limit setting closest to 120 bpm, with the initial input signal rate low enough to prevent initial alarm activation; but in step (d), increase the repetition rate. Repeat this step for the upper alarm limit setting for 200 bpm.

j) Repeat steps (a), (b), and (c) for the lower alarm limit setting closest to 30 bpm. The initial rate of the input test signal shall be just great enough to prevent activation of the alarm. Within 10 seconds, decrease the rate of the test signal from the initial rate to a rate that is 50 percent of the disclosed minimum alarm setting. The monitor shall not fail to generate an alarm.

k) Repeat step (i) for the upper alarm limit setting closest to 200 bpm (250 bpm for neonatal/pediatric monitors), with the initial rate of the input test signal just low enough to prevent activation of the alarm. Within 10 seconds, increase the input signal rate from the initial rate to a rate one-half of the sum of 300 bpm and the disclosed maximum of the meter range. The monitor shall not fail to generate an alarm. Repeat this test sequence, increasing the initial input signal rate to 300 bpm. For neonatal/pediatric monitors, the initial input signal rate is increased to 350 bpm and to a rate one-half the sum of 350 bpm and the disclosed maximum of the meter range. In all cases, the monitor shall not fail to generate an alarm.

5.2.8.4 Time to alarm for cardiac standstill

a) Apply a triangular waveform, as shown in Figure 6, of 1 mV amplitude and 70 ms duration to the monitor input.

b) Set the rate to 80 bpm and the lower alarm limit closest to 60 bpm.

c) Suddenly change the input rate to zero.

Single user license only. Copying, networking, and distribution prohibited.

iRhythm, Inc. / Welch Allyn, Inc.
Exhibit 1030
Page 44

d) Measure the time from the beginning of the last QRS wave to alarm activation and subtract 0.75 seconds.

e) This test shall be repeated five times. The average time interval measured for the five trials shall not exceed 10 s, and no single time interval measurement shall exceed 13 s.

5.2.8.5 Time to alarm for low heart rate

a) Apply a triangular waveform, as shown in Figure 6, of 1 mV amplitude and 70 ms duration to the monitor input.

b) Set the rate to 80 bpm and the lower alarm limit closest to 60 bpm.

c) Suddenly change the input rate to 40 bpm.

d) Measure the time interval from the first QRS after the new interval is observed until the alarm is activated.

e) Repeat this test five times. The average time interval measured for the five trials shall not exceed 10 s, and no single time interval measurement shall exceed 13 s.

5.2.8.6 Time to alarm for high heart rate

a) Apply a triangular waveform, as shown in Figure 6, of 1 mV amplitude and 70 ms duration to the monitor input.

b) Set the rate to 80 bpm and the upper alarm limit closest to 100 bpm.

c) Suddenly change the input rate to 120 bpm.

d) Measure the time interval from the first QRS after the new interval is observed until the alarm is activated.

e) Repeat this test five times. The average time interval measured for the five trials shall not exceed 10 s, and no single time interval measurement shall exceed 13 s.

5.2.8.7 Alarm silencing

a) Run test 5.2.8.5 for time to alarm for low heart rate.

b) For monitors with latching alarms, reapply the 80 bpm test waveform after the alarm(s) is activated. For monitors with nonlatching alarms, leave the monitor in an alarm condition.

c) Reset the alarm by means of the reset control provided.

d) The alarm(s) shall be silenced.

e) For monitors with latching alarms, reactivate the alarm(s) as described in step (a). For monitors with nonlatching alarms, as soon as the alarm is silenced, reapply the 80 bpm test waveform until the displayed rate value is higher than the low alarm set point. Then reactivate the alarm as described in step (a).

f) Measure the time between the silencing of the alarm and its reactivation. This measurement shall be within ±20 percent or 5 s, whichever is greater, of the time interval disclosed by the manufacturer. If adjustable reactivation time intervals are provided, the upper and lower alarm limits of the range shall be measured and shall be within ±20 percent or 5 s, whichever is greater, of those disclosed by the manufacturer.

NOTE—This test may be combined with 5.2.8.5.

5.2.8.8 Alarm disabling

If the device is equipped with a means of disabling the alarm(s), activate the control provided and verify that the status of the alarm(s) is evident on the front panel of the device, clearly and visibly distinguishable from any other status of the monitor and, if applicable, at the central station.

5.2.9 Special requirements for monitors with ECG waveform display capability

5.2.9.1 Input dynamic range

a) Adjust the signal generator of the test circuit shown in Figure 8 with switches S1 and S2 closed to generate a 16 ± 1 Hz, 10 mV p-v, triangular or sinusoidal signal having zero dc voltage offset between P1 and P2.

b) Connect the input leads of the device to the signal generator.

Single user license only. Copying, networking, and distribution prohibited.

iRhythm, Inc. / Welch Allyn, Inc.
Exhibit 1030
Page 45

c) Verify that the device controls can be adjusted, if necessary, to generate a clearly visible triangular or sinusoidal wave.

d) Verify that the amplitude of the signal does not change by more than ±10 percent when dc offset voltages of –300 mV, +300 mV, –150 mV, and +150 mV are added in turn. Further increase the dc offset above +300 mV while checking for reductions of the displayed size of the 10 mV signal. Use any trace restoration capabilities the monitor possesses. Verify that a suitable indication of overload or saturation is given before the display of the 10 mV, 16 Hz test signal is reduced to 50 percent of its size at zero offset. Increase the offset to as high as 5 V until signal reduction occurs. Repeat with offsets more negative than –300 mV.

e) Repeat the above test for all physically distinct recording channels, with patient electrode connections and lead selector switch in each of the configurations, as applicable, of Table 5.

f) Return switch S3 to position a. Adjust the signal generator and the value of the resistor in parallel with switch S5 so as to obtain, at P4, a ramp from –300 mV to +300 mV at 1 mV/s.

g) For each operational mode of the monitor, verify that there are no discontinuities greater than 30 µV on the trace for any of the connections of Table 6. Some monitors may not be able to keep the test signal displayed while the ECG gain is set high enough to look for 30 µV discontinuities. In such instances, the monitor's display cannot be used to verify the test results. In systems where the high pass filtering (and/or subtraction of offset) is done entirely in hardware, it is acceptable to connect a scope to the highest-gain signal available in the channel, and, using an ac coupling on the scope, look for any discontinuities there that exceed 30 µV referred to input. If the ECG channel has no high pass filtering or offset subtraction in hardware (and thus digitizes the entire range of ±300 mV), then an examination of the resolution of the A/D converter being used (as it is referred to the ECG input) should suffice by itself.

Table 6—Patient electrode connections for pacemaker pulse display test

Measuring lead	Patient electrode connection to P1	Patient electrode connection to P2
I, aVL	LA	All others
II, aVR	RA	All others
III, aVF	LL	All others
V	V	All others
VI	VI (where i = 1 to 6)	All others
X,Y, Z	A, M, F (LL)	All others

NOTE—For monitors with nonstandard leads, patient electrode connections must be connected to P1 and P2 in such a way that the simulated pacemaker pulse appears at the input of the measuring lead.

5.2.9.2 Input impedance

a) Energize the monitor and set it at the standard recording conditions of 5.2.1.

b) Connect the monitor to the test circuit of Figure 8 with switches S1 and S2 closed, and the appropriate patient electrode connections for the test lead connected to P1 and P2. All unused patient electrode connections are connected to P6. Adjust the sinusoidal generator to a frequency of 0.67 Hz and to an amplitude yielding 20 mm p-v at the display.

c) Open switch S1 and measure the change in amplitude at the output. The steady-state signal amplitude shall not decrease by more than 20 percent.

d) Repeat steps (b) and (c) with frequencies of 5, 10, 20, and 40 Hz; verify that opening switch S1 does not decrease the output by more than 20 percent.

e) Repeat steps (b) and (c) with +300 mV and –300 mV dc offsets superimposed on the sinusoidal test signal.

f) Repeat the above tests with patient electrode connections and lead selector switch in each of the configurations, as applicable, of Table 5.

Single user license only. Copying, networking, and distribution prohibited.

iRhythm, Inc. / Welch Allyn, Inc.
Exhibit 1030
Page 46

5.2.9.3 System noise

NOTE—The manufacturer's recommended patient cable, or equivalent, must be used for this test.

a) Insert in series with each patient electrode connection a 51 kilohm resistor in parallel with a 47 nF capacitor, as shown in Figure 10 (see also 5.2.9.10). Connect all patient electrode connections of the monitor together, including the right leg connection.

b) With the monitor adjusted for the highest gain and with any line frequency notch filter set to be active, verify that noise on the output trace is no greater than 30 μV p-v RTI, during any 10 s interval, for any position of the selector switch. The input signal and 100 pF capacitor are not connected for this test. See annex C for more details on the test circuit of Figure 10.

c) Repeat this test nine more times. Verify that the 30 μV limit is not exceeded for at least nine of the 10 trials. The 10 trials must be conducted over a time period not to exceed 30 minutes, and the leads must not be disconnected between trials.

5.2.9.4 Multi-channel crosstalk

For monitors with standard and/or Frank leads, compliance with 4.2.9.4 can be verified by the following test.

a) Connect the monitor to the test circuit of Figure 8, with switches S1 and S2 closed; switch S3 in position a; and patient electrode connections LL, V1, and, if provided, the Frank (E) joined to P1. All unused patient electrode connections should be joined via P2 to the reference lead through a parallel combination of a 51 kilohm resistor and a 47 nF capacitor.

b) Adjust the signal generator to produce a 2.5 mV p-v, 30 Hz triangular wave between P1 and P2.

c) Operate the device at the standard gain and time base (10 mm/mV and 25 mm/s) and record the outputs, which should display leads I, II, and III. The output of the lead I channel must be less than 1.25 mm.

d) Reconnect LL from P1 to P2 and RA from P2 to P1, and record the outputs that display leads I, II, and III. The output of the lead III channel must be less than 1.25 mm.

e) Reconnect RA from P1 to P2 and LA from P2 to P1, and record the outputs. The output of the lead II channel must be less than 1.25 mm.

f) Connect V1 only to P1 and all other patient electrode connections, via P2, to the reference lead through the parallel combination of 51 kilohms and 47 nF. Record outputs of all channels. The output of each channel except that displaying V1 must be less than 1.25 mm.

g) Repeat step (f) with V2 through V6 connected in turn to P1, and with all other patient electrode connections attached to P2 as above. In each case, the output of all channels except the one displaying the lead connected to P1 must be less than 1.25 mm.

h) For Frank leads, the channels displaying X and Y outputs must have outputs less than 1.25 mm. For monitors with other leads, connections of patient leads to P1 and P2 must take into account the sharing of any specific patient lead with more than one channel before applying the 1.25 mm limit.

5.2.9.5 Gain control and stability

a) **Gain selection.** Verify that at least one gain setting (5 mm/mV) is provided by introducing a 1 mV p-v, 8 Hz input signal; observe whether the gain can be adjusted to generate an output signal of at least 5 mm p-v. Compliance with the requirement that devices with permanent display capabilities provide at least one fixed gain setting (10 mm/mV) can be verified by inspection.

b) **Gain control.** Compliance with 4.2.9.5(b) can be verified by inspection.

c) **Gain switching.** Compliance with 4.2.9.5(c) can be verified by inspection.

d) **Gain stability.** The gain drift shall be measured by applying an external ±1 mV step voltage to the device. At 1, 15, 30, and 60 minute intervals after energizing the device, and at a gain setting of 10 mm/mV, the observed change in display step amplitude between any measurements must be less than 1 mm. For devices with permanent displays, the amplitude of the calibration pulse shall be 10 mm, with a maximum error of ±1 mm. For monitors without a 10 mm/mV gain setting, gain drift shall be tested at the 5 mm/mV gain setting, with the input signal adjusted to produce a 10 mm step change on the display. The calibration pulse at this gain setting shall be 5 mm, with a maximum error of ±0.5 mm.

Single user license only. Copying, networking, and distribution prohibited.

iRhythm, Inc. / Welch Allyn, Inc.
Exhibit 1030
Page 47

At the conclusion of these tests, turn off the power to the device for at least one minute. Then reenergize the device and at 1, 6, and 11 minute intervals, at a gain setting of 10 mm/mV, apply an external 3 mV step voltage to the device. The observed change in display step amplitude between any two successive output waveforms must be less than 1 mm.

5.2.9.6 Time base selection and accuracy

a) That devices with permanent displays provide at least one time base (25 mm/s) can be determined by visual inspection. Time base accuracy can be determined by connecting a signal generator between any lead set of the monitor and adjusting the amplitude of a triangular signal to obtain a 5 mm p-v signal at 25 Hz ± 1 percent. At a time base of 25 mm/s, each peak shall fall at 1 mm intervals. Record for at least 6 s at this time base, disregarding or discarding data from the first 1 s interval. Using calipers and a vernier scale calibrated to 0.1 mm, measure the distance between 10, 20, and 40 successive peaks; the distances must be within 10 ± 1 mm, 20 ± 2 mm, and 40 ± 4 mm, respectively. Repeat the measurements at least three times along different parts of the strip, and verify that they fall within the ±10 percent error band each time.

b) Compliance with the requirement that available time bases are disclosed in the labeling for devices with nonpermanent displays can be verified by inspection. Time base accuracy can be tested using a 2.5 Hz (±2 percent) triangular signal adjusted to produce a 5 mm p-v amplitude and by taking a time-exposure photograph of the screen with the horizontal sensitivity adjusted to 25 mm/s. The resultant peak-to-peak distances measured along the horizontal axis for both the upper and lower peaks must be between 9 mm and 11 mm.

5.2.9.7 Output display

a) **Channel width.** With a channel width selection of 30 mm, apply a test signal, sinusoidal or triangular, at any frequency between 1 Hz and 40 Hz, with an input amplitude sufficient to produce an output deflection per channel covering the expected full width of the output display area. This amplitude must be measured to verify that it is no less than 30 mm. This test must be repeated for each of the patient electrode connections and lead selector configurations, where applicable, of Table 5 and using the test circuit of Figure 8. Alternate channel widths can be verified by inspection in a similar fashion.

b) **Aspect ratio.** For devices with nonpermanent displays, apply a 1 mV p-v sinusoidal or triangular signal at a frequency of 1 Hz. Measure the amplitude of the displayed signal (A) in mm p-v. Measure the length (B) in mm along the display for one complete waveform cycle. The ratio A/B must be 0.4 ± 0.08.

5.2.9.8 Accuracy of input signal reproduction

a) **Overall system error.**

1) *Devices with permanent displays.* Set the device in the standard operating mode (gain, 10 mm/mV; time base, 25 mm/s). Adjust the signal generator of Figure 8 with switches S1 and S2 closed to obtain a triangular signal of 2 Hz, such that the peaks of the triangles reach the upper and lower limits of the ruled portion of the recording channel. Measure the p-v voltage between P3 and P4; verify that the displayed signal amplitude (in mm), divided by the indicated gain setting, is within 20 percent of the mV value between P3 and P4. Repeat this test for every available channel by switching to the appropriate patient electrode connection/lead.

NOTE—Devices that use digital arrays for printing are exempt from this requirement.

2) *Devices with nonpermanent displays.* Adjust a 25 Hz sinusoidal signal to an amplitude between 0.5 mV p-v and 1 mV p-v—adjusting the gain of the monitor if necessary—to produce a 10 ± 1 mm amplitude signal in the center of the oscillographic display channel. Vary the position of the sinusoidal signal over the total manufacturer-specified width of the display channel by using either a baseline control or a superimposed 2 Hz triangular signal. Verify that the sinusoidal amplitude at the upper and lower edges and at two intermediate vertical points of the recording channel does not vary by more than ±2 mm from that established at the center. Repeat this test for all available independent traces or recording channels.

NOTE—Digital array displays are exempt from this requirement.

3) *Permanent or nonpermanent displays.* Apply the test waveform of Figure 6 to the monitor leads. Verify that the instantaneous displayed signal amplitude (in mm) divided by the indicated gain setting is within 20 percent or 100 μV, whichever is greater, of the mV value at the input. (The peak amplitude is determined by extending the sides of the triangle to the point of intersection. The gain setting may be changed as a_r is changed.) Run this test for all combinations of the following waveform parameters:

Single user license only. Copying, networking, and distribution prohibited.

iRhythm, Inc. / Welch Allyn, Inc.
Exhibit 1030
Page 48

(i) a_r = 0.5 and 5 mV; (ii) d = 70 and 120 ms (40 and 120 ms for neonatal/pediatric monitors); and (iii) heart rate = 30 and 200 bpm (30 and 250 bpm for neonatal/pediatric monitors). If the nonpermanent display does not have an indicated gain setting, the gain must be determined by using the standardization voltage.

b) **Frequency response.**

1) *Method A.* If the monitor has operator-selectable modes, the test must be conducted with the monitor in each of its modes. The test procedure for method A is as follows: For devices having permanent displays, set the gain at 10 mm/mV; for those with nonpermanent displays, adjust the gain to produce a sinusoidal signal of at least 5 mm p-v (preferably 20 mm p-v). The voltage of the input signal is as specified in 4.2.9.8(b). Verify that for the test frequency range, the output signal amplitude remains within the allowable range of response specified in 4.2.9.8(b).

2) *Method B.* The test procedure for method B is as follows:

i) At a gain setting of 10 mm/mV, attach the appropriate patient electrode connection to a repetitive, triangular wave signal (see Figure 1) with a base width of 200 ± 20 ms. Adjust the input to produce an output amplitude of 15 ± 0.5 mm. Without changing the input amplitude, reduce the base width to 20 ± 1 ms. The repetition rate, selected to obtain the most irregular pattern of amplitudes of successive output peaks, may be one per second or lower. This procedure will ensure that the full range of amplitude variability, which results from sampling points missing the peak of the triangular waveform, will be obtained.

ii) For each of 10 consecutive cycles, locate the point of maximum amplitude (M). Locate the point (P) that lies midway between the peaks of consecutive cycles. Each peak amplitude is computed as the difference between amplitude M and the baseline value P preceding M. This amplitude must be no less than 75 percent (11.25 mm nominal) of the peak amplitude recorded for the 200 ms triangular wave input signal.

c) **Impulse response.** The monitor must meet this test requirement in addition to meeting the requirements of methods A and B. If the monitor has operator-selectable modes, these test requirements must be met in at least one mode. An appropriate indication of mode in operation must be observed on the recording medium which informs the user whether the monitor is operating in the extended low-frequency response mode.

The impulse response test is conducted as follows: Apply an input impulse of 3 mV amplitude and 100 ms duration and verify that the output baseline following the impulse is displaced no more than 0.1 mV from the baseline preceding the impulse. Verify that the slope of the response does not exceed 0.30 mV/s following the end of the impulse. If a 3 mV-for-100 ms impulse trips the monitor's pacer detector, and tripping that pacer detector causes that monitor to act more favorably during this test, then test modification is required. The modification may require using a lower amplitude but longer duration impulse that still has a 0.3 mV/s area, slowing the impulse's rise and fall times sufficiently, or literally defeating the pacer detector hardware, etc., so that the pacer detector is not tripped during this test.

d) **Lead weighting factors.** See 4.2.7.3 of the American National Standard, *Diagnostic electrocardiographic devices* (applicable document 2.2).

e) **Hysteresis.** With the monitor set at the standard operating conditions, a +1.5 mV pulse, with an exponential trailing edge having a time constant of 50 ms, is applied to any patient electrode connection. Two seconds after application of the pulse, the output trace shall have returned to within ±0.5 mm of the initial baseline value. This test is then repeated using a –1.5 mV pulse.

5.2.9.9 Standardizing voltage

a) Connect the monitor as shown in Figure 8 with switch S1 closed and S2 open. Set the gain at 10 mm/mV and activate the standardization mechanism to generate the calibration pulse on all available channels.

b) Verify that the display pulse(s) has an amplitude within ±10 percent of the amplitude obtained when a 1 ± 0.01 mV signal is applied as per 5.2.9.8(b).

c) Repeat steps (a) and (b) for all fixed gain settings to verify that the standardization signal correctly reflects the gain setting. The error must be less than ±10 percent of the expected value or 0.5 mm, whichever is greater. For square wave pulses, pulse amplitudes must be measured 20 ms to 40 ms after pulse initiation.

d) For multi-channel devices, verify that the standardization signal appears on all channels.

Single user license only. Copying, networking, and distribution prohibited.

iRhythm, Inc. / Welch Allyn, Inc.
Exhibit 1030
Page 49

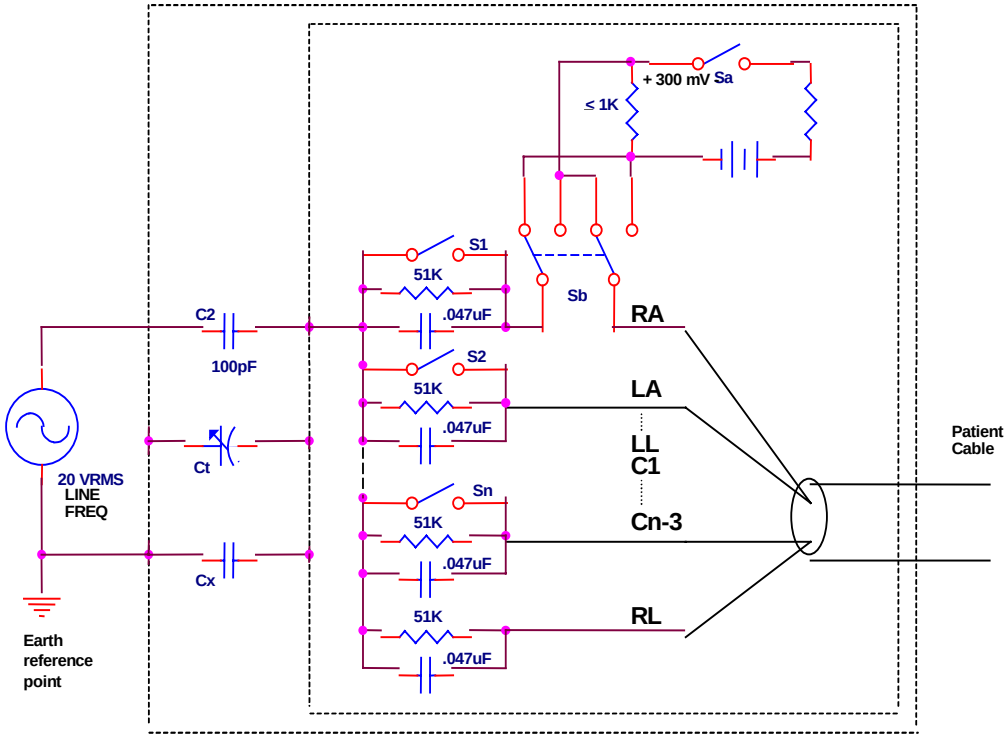

NOTE—In this test circuit, C2 and Ct simulate the patient's capacitance to ground. The test circuit includes shielding to reduce the pickup of unwanted extraneous signals—indicated by the outer dotted line; to be effective, it should be connected to an earth ground reference point. Since the capacitance between the shield and the measuring circuit may adversely affect the results, an internal guard shield encloses the sensitive part of the circuit. This guard shield (indicated by the inner dotted line) is connected to a point in the test circuit representing the common mode test voltage.

Since the capacitance (Cx) between the inner and external shields influences both the source capacitance and the common mode voltage, this capacitance is increased by trimmer capacitor (Ct) to 100 pF, equal to the generator coupling capacitor (C2). The generator output is increased to 20 Vrms, thus providing 10 Vrms at the common mode point with a source impedance equivalent to 200 pF when the patient cable is not connected to the test circuit. (See also A.4.2.9.10 and annex C.)

Figure 10—Test circuit for evaluating internal noise and common mode

5.2.9.10 Common mode rejection

Common mode rejection capability can be measured by the following procedure (refer to annex C for construction and application techniques for the CMR test fixture and line frequency source).

a) With all patient electrode connections attached to a common node and with a parallel combination of a 51 kilohm resistor and a 47 nF capacitor in a series with each patient lead, including the RL or green lead, if supplied (Figure 10), apply a line frequency, 20 Vrms signal to the common node through a 100 pF capacitor. The negative side of the generator is connected to the power ground and the device is operated at the frequency bandwidth of 4.2.9.8(b) and at a gain of 10 mm/mV or higher. Switches S1 through Sn are open; Sa is open. With the patient cable disconnected, adjust Ct such that the voltage across it is 10 Vrms.

b) Verify that the measured p-v output noise over a 60 s time period does not exceed 1 mV RTI for each available lead setting.

c) Repeat the test with a +300 mV and –300 mV dc offset in series with the imbalance impedance, by closing Sa and testing with the double-pole, double-throw (DPDT) switch in each of its two positions.

d) Repeat steps (a) through (c) with each of the switches S1 through Sn, in turn, closed.

Single user license only. Copying, networking, and distribution prohibited.

iRhythm, Inc. / Welch Allyn, Inc.
Exhibit 1030
Page 50

5.2.9.11 Baseline control and stability

a) **Reset.**

1) Connect the monitor to the test circuit of Figure 8 with all switches closed; adjust the sinusoidal generator to produce a 10 Hz, 1 mV p-v signal between P1 and P2.

2) Select any available lead and corresponding patient electrode connection combination, and apply a line frequency, 1 V p-v overload voltage between P1 and P2 for at least 1 s.

3) Verify that the 10 Hz signal is clearly visible 3 s after removal of the overload. The manual reset mechanism (if provided) may be activated immediately after removal of the overload.

b) **Stability.**

1) Modify the test circuit of Figure 8 by replacing the 100 ohm resistor with a 25 kilohm resistor between P3 and P4.

2) Connect the monitor (in the standard recording mode) with switch S2 open and switch S1 closed.

3) One minute after energizing the device, activate the reset function and determine the trace location 10 s later. This trace location constitutes the initial baseline value for subsequent calculations.

4) Measure the baseline drift of the output display to verify that it neither exceeds 1 mm in any subsequent 10 s period, nor exceeds 5 mm during the next hour of observation.

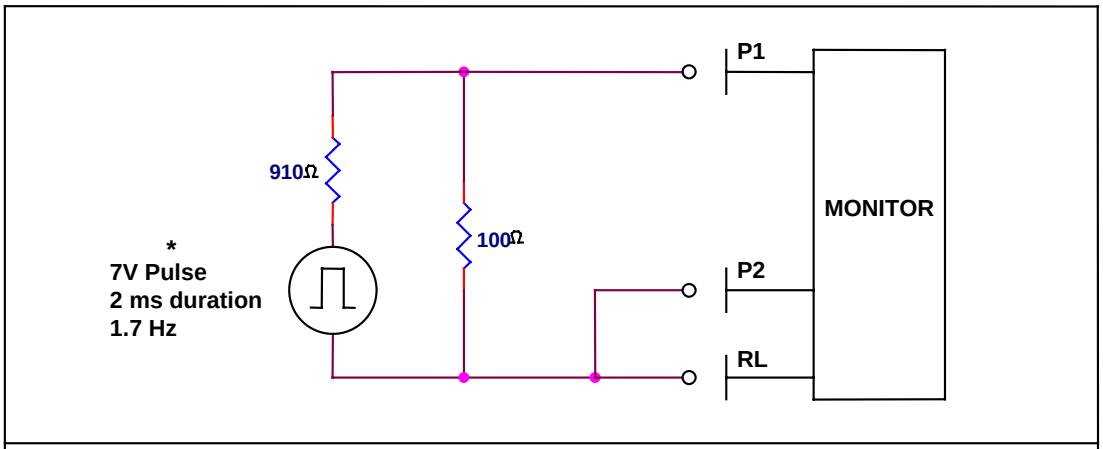

NOTE—For the pacemaker pulse display test, the pulse amplitude and duration are adjusted as per 5.2.9.12 (b) and (d).

Figure 11—Pacemaker overload test circuit

5.2.9.12 Pacemaker pulse display capability

a) Connect the monitor to the test circuit of Figure 11 (or Figure D.1 in annex D) using the connections shown in Table 6 for each appropriate lead selection. The device shall be set at the standard operating conditions (gain, 10 mm/mV; time base, 25 mm/s) and at the standard frequency response (or at a higher frequency response, if recommended by the manufacturer for display of pacemaker pulses).

b) Adjust the pulse generator to add pulses of 700 ± 70 mV amplitude to the patient electrode connections. These pulses shall be added at a frequency of 100 pulses per minute, and have a duration of 2 ± 0.2 ms and a maximum rise time of 100 µs.

c) Measure the difference in vertical positions of the trace 2 mm or 80 ms before the pulse and 3 mm or 120 ms after the pulse. These positions must not differ by more than 1 mm.

Single user license only. Copying, networking, and distribution prohibited.

iRhythm, Inc. / Welch Allyn, Inc.
Exhibit 1030
Page 51

d) Adjust the pulse generator for a pulse width of 100 ± 10 ms, and adjust the output level to produce a pulse display of 20 mm. Reduce the pulse width to 0.5 ± 0.05 ms.

e) Verify that the presence of the pulse is clearly visible, with an amplitude of at least 2 mm, and that during a 10 s period the baseline shift is less than ±10 mm.

f) Repeat steps (a) through (e) to test each appropriate lead selection.

5.2.9.13 Synchronizing pulse for cardioversion

Apply the test waveform specified in 4.2.6.1 and Figure 6 to the monitor leads. Verify that the leading edge of the synchronizing pulse output occurs no later than 35 ms from the peak of the R wave of the input signal.

By visual inspection, verify that the amplitude, duration, and shape of the synchronizing pulse conforms to the manufacturer's specifications. Using a resistive load, verify also that the output impedance meets the manufacturer's specifications.

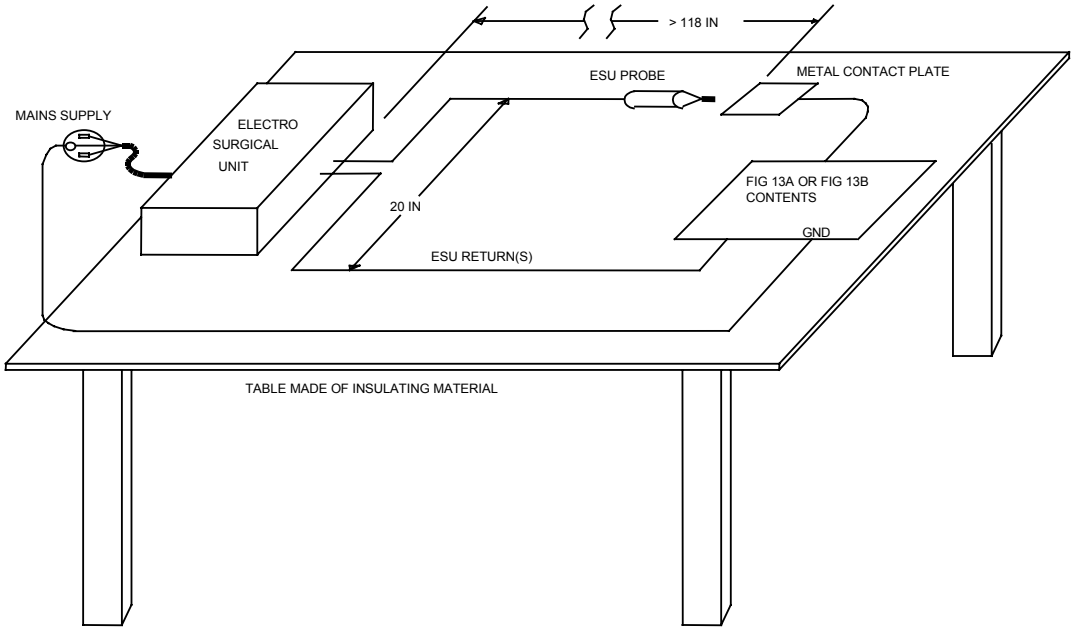

Figure 12—Electrosurgery test setup

5.2.9.14 Electrosurgical interference suppression

If the manufacturer claims that the monitor has electrosurgical interference suppression (ESIS), then with an electrosurgical unit as described, perform the following test of compliance.

WARNING: Be aware that the shield around this fixture, the fixture's ECG outputs, and the entire ECG system and cable of the monitor under test all have dangerous voltages present on them whenever the electrocautery unit is enabled, so take proper precautions.

a) Connect the monitor to the test circuit of Figure 13B (or other suitable simulator) using the test setup of Figure 12. Set switch S1 to its ON position. Set the monitor for 10 mm/mV display sensitivity, and use any accessories or monitor settings recommended by the manufacturer. Allow the monitor time to stabilize at the fixture's heart rate.

Single user license only. Copying, networking, and distribution prohibited.

iRhythm, Inc. / Welch Allyn, Inc.
Exhibit 1030
Page 52

b) **Test in cut mode.** Set the cut output power of the electrosurgical equipment to 300 W, and select a pure cut mode (no blend). With cut mode active, touch the metal contact/block in the test setup (see Figure 12) with the probe electrode and hold it in contact for the required interval. Then remove the electrode slowly to get an arc, and maintain the arc for the required interval.

c) **Test in coag mode.** Repeat the test in items (a) and (b) above except with coag mode active and its output power set to 100 W. (Test of any spray coag mode is excluded.)

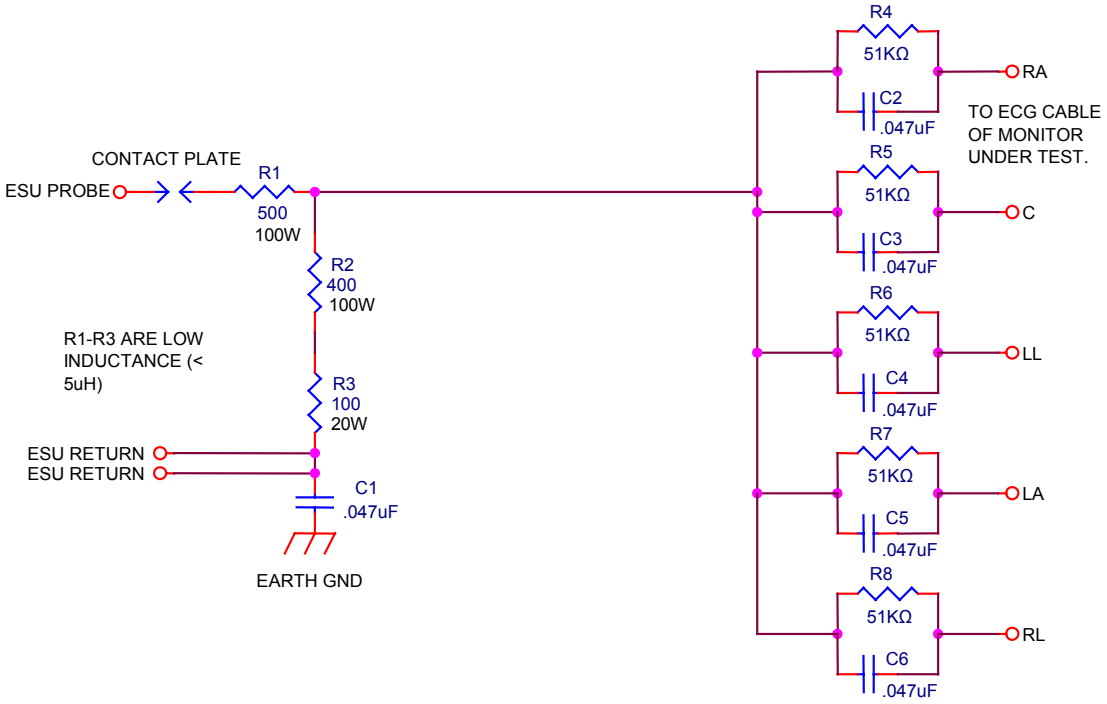

WARNING:

OUTPUT FROM ELECTROCAUTERY UNIT CAN CAUSE SERIOUS RF BURNS. DO NOT TOUCH FIXTURE WHILE ESU IS OPERATING!

Figure 13A—Electrosurgery overload test circuit

Single user license only. Copying, networking, and distribution prohibited.

iRhythm, Inc. / Welch Allyn, Inc.
Exhibit 1030
Page 53

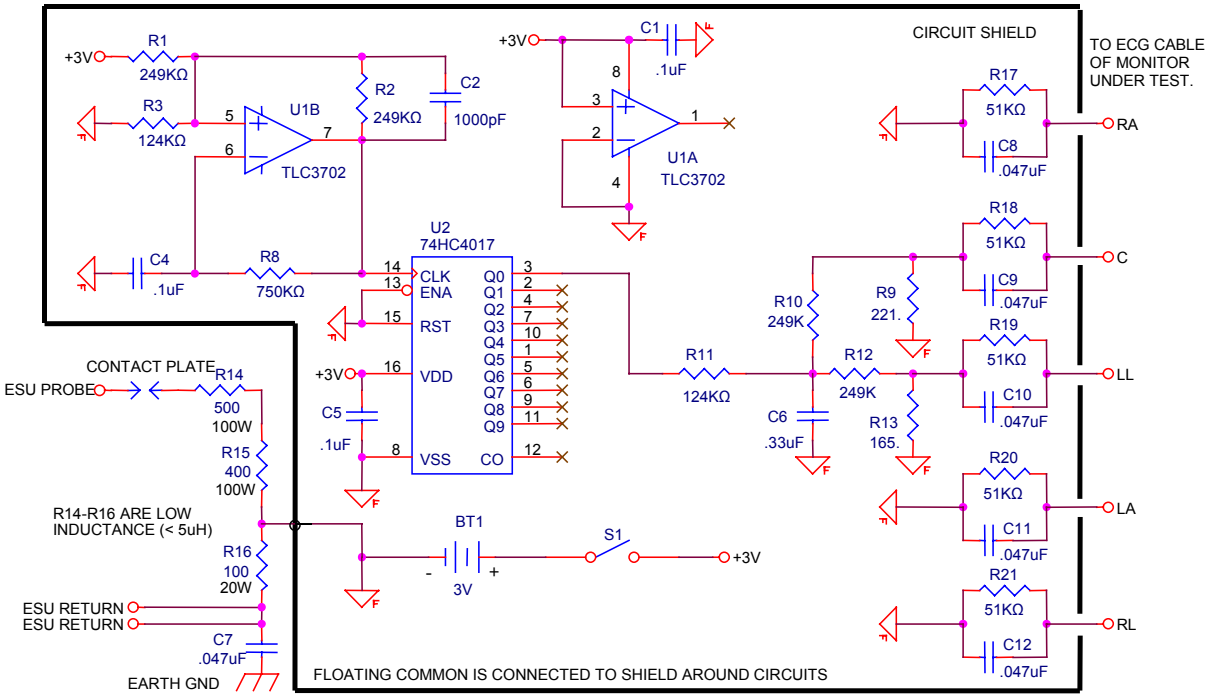

WARNING:

OUTPUT FROM ELECTROCAUTERY UNIT CAN CAUSE SERIOUS RF BURNS. DO NOT TOUCH FIXTURE WHILE ESU IS OPERATING!

Figure 13B—Electrosurgery suppression test circuit

The circuit of Figure 13B provides a simulated ECG output of about 1 mV in each of leads II, III, and V, so that electrodes do not need to be swapped during testing. This fixture provides approximately 75 ms wide pulses in these three leads. Rate is approximately 73 bpm. In Figure 13B, U1 is a dual, FET input comparator with a CMOS output stage that swings rail-to-rail. U1B is a square wave oscillator whose frequency is reasonably independent of supply voltage and IC specification tolerances. (The oscillator's exact frequency is not critical in any case; it just needs to be stable during the cautery.) U1A is not used. U2 is a decimal counter that has one output out of 10 high at a time, in a repeating sequence. The 51 KΩ resistors and .047 μF capacitors in the ECG outputs simulate electrode and patient impedances. Capacitor C7 to earth ground minimizes the effect of different electrosurgery unit designs (e.g., different isolation capacitances or actual earth ground connection). The resistors used as electrocautery loads should be low inductance (< 5 μH) to simulate patient impedance. Connect the fixture's shield to the junction between R15 and R16 for ESIS testing. Note that the shield of the monitor's ECG cable must have no connection whatsoever to this test circuit. Many electrosurgical units include a safety feature whereby the unit cannot be energized unless the two halves of a split patient return electrode are shorted together by the patient's body. If the unit used for this test is so equipped, both connections for that split electrode must be connected to R16 for the unit to operate.

5.2.10 Electromagnetic compatibility

5.2.10.1 Electromagnetic emissions

The test methods of CISPR 11 (reference document 2.5) apply. Equipment shall be tested with all cables attached, in the worst-case configuration and operating mode. The ECG cable shall be terminated in a load simulating the patient (51 kilohm parallel with 47 nF). Instrument configurations are to be determined by the manufacturer. It is recommended that the instrument be tested in a sufficient variety of configurations and operating states that might be used in normal operation so that the worst case may be determined.

Single user license only. Copying, networking, and distribution prohibited.

iRhythm, Inc. / Welch Allyn, Inc.
Exhibit 1030
Page 54

5.2.10.2 Electromagnetic immunity

5.2.10.2.1 Immunity to radiated electromagnetic fields

The test methods of IEC 60601-1-2 (reference document 2.6) apply.

Equipment shall be tested with all cables attached, in the worst-case configuration and operating mode. The ECG cables are terminated in a simulated patient load (51 KΩ in parallel with 47 nF). Instrument configurations are to be determined by the manufacturer. It is recommended that the instrument be tested in a sufficient variety of configurations, operating states, and positions that might be used in normal operation so that the worst case may be determined.

5.2.10.2.2 Immunity to conducted RF interference

The ECG cables are terminated in a simulated patient load (51 KΩ in parallel with 47 nF). The test methods of IEC 60601-1-2 (reference document 2.6) apply.

5.2.10.2.3 Immunity to magnetic fields

The test methods of IEC 60601-1-2 (reference document 2.6) apply. The ECG leads are to be shorted at the electrode end of the ECG cable. Lead wires are to be tightly twisted to minimize loop area. If the monitor has a power line frequency notch filter, that filter shall be set to the appropriate frequency and enabled during this test.

5.2.10.2.4 Immunity to electrostatic discharge

The test methods of IEC 60601-1-2 (reference document 2.6) apply. The ECG leads are to be shorted at the electrode end of the ECG cable. Lead wires are to be tightly twisted to minimize loop area.

5.2.10.2.5 Power line transients

The test methods of IEC 60601-1-2 (reference document 2.6) apply.

Single user license only. Copying, networking, and distribution prohibited.

iRhythm, Inc. / Welch Allyn, Inc.
Exhibit 1030
Page 55

Annex A
(informative)

Rationale for the development and provisions of this standard

A.1 Introduction

This standard establishes performance criteria and test methods for devices used to monitor the heart rate of critically ill patients. The standard is intended to help ensure that cardiac monitors will perform safely and effectively and that users will be provided with sufficient data to judge device performance and operate the device safely.

The standard covers all cardiac monitors, with or without the capability for ECG waveform display and with or without heart rate meters and/or alarms. The standard does not require the provision of these features, but rather defines performance criteria for ECG waveform displays, heart rate meters, and alarms when the cardiac monitor is so equipped.

Generally speaking, the requirements pertaining to monitors with heart rate meters and alarm functions are based largely on the second and final draft of a standard developed by the UBTL Division of the University of Utah Research Institute, under contract with the U.S. Food and Drug Administration (FDA) (Schoenberg, et al., 1978). The requirements applicable to monitors with ECG waveform display capability are based largely on the fourth draft of a standard for ECG devices also developed by UBTL under FDA contract (Schoenberg, et al., 1977).

This annex provides the rationale for the initiation of a standards development effort on cardiac monitors, and the rationale for each of the standard's provisions.

A.2 Need for the standard

In 1974, the FDA established classification panels to serve as advisory committees to the agency in determining how best to regulate cardiovascular and other medical devices—by general controls (Class I), performance standards (Class II), or pre-market approval (Class III). This action was taken in anticipation of the passage of the Medical Device Amendments to the U.S. Food, Drug, and Cosmetic Act (enacted 28 May 1976).

Based on the preliminary recommendations of the Cardiovascular Device Classification Panel, the FDA initiated a contract with UBTL to conduct a literature review and Phase I study, and to develop what was anticipated to be a regulatory standard for cardiac monitors, heart rate meters, and alarms. The second and final draft of this FDA/UBTL standard was published in October 1978.

In the meantime, in the spring of 1978, the FDA requested that AAMI undertake development of a voluntary standard for cardiac monitors, using as a point of departure the UBTL contract work. (This request came as a result of a new FDA standards policy placing primary emphasis on the voluntary sector for the development of needed standards.) The AAMI ECG Committee reviewed the accumulated documentation and agreed with the FDA that a standard was needed. Accordingly, in March 1978, the ECG Committee established a Cardiac Monitor Subcommittee charged with the responsibility for the initial voluntary standards development work. During the following summer, this subcommittee participated in the public review hearings on the FDA/UBTL draft standard; formal responsibility for the development of an American National Standard on cardiac monitors was assumed by the subcommittee upon publication of the FDA/UBTL final second draft.

As part of its initial review of the FDA/UBTL draft cardiac monitor standard, the Cardiac Monitor Subcommittee also studied the FDA/UBTL fourth draft standard for ECG devices. The latter document included proposed performance requirements for those cardiac monitors (designated as "Type II" ECG devices) that display the ECG waveform but do not provide heart rate meters and alarms. (Diagnostic electrocardiographs were designated Type I ECG devices in the FDA/UBTL draft standard.) The AAMI ECG Committee and Cardiac Monitor Subcommittee ultimately decided to incorporate these Type II requirements into the AAMI cardiac monitor standard for all-inclusiveness, and to confine the scope of the AAMI ECG standard to diagnostic equipment.

In the 9 March 1979 *Federal Register*, the FDA proposed regulations classifying cardiac monitors as Class II devices, based on the final recommendations of the FDA's Cardiovascular Device, Anesthesiology Device, and General Hospital and Personal Use Device Classification Panels:

> The Panels recommend that establishing a performance standard for this device be a high priority . . . that cardiac monitors be classified into class II because this electrically powered device is neither life-supporting nor life-sustaining, but is potentially hazardous to life or health even when properly used. Failure of the device to accurately measure heart rate can result in misdiagnosis that could have a significant negative effect on the

Single user license only. Copying, networking, and distribution prohibited.

iRhythm, Inc. / Welch Allyn, Inc.
Exhibit 1030
Page 56

patient's health. This device is attached to the body through ECG electrodes, and is used in a clinical environment where excessive leakage current can be a serious hazard. Thus the electrical characteristics of this device (e.g., electrical leakage current) need to meet certain requirements. Performance characteristics, including accuracy, reproducibility, and any limitations on the device's measurement of heart rate, should be maintained at a generally accepted satisfactory level, and should be made known to the user through special labeling. The device is used with other devices in a system that may be hazardous if not satisfactorily assembled, used, and maintained. The Panels believe that general controls alone would not provide sufficient control over the performance and electrical characteristics of the device. The Panels believe that a performance standard will provide reasonable assurance of the safety and effectiveness of the device and that there is sufficient information to establish a standard to provide such assurance. (FDA, 1979)

Several specific risks to health were identified in the proposed regulation:

a) **Cardiac arrhythmias or electrical shock.** Excessive electrical leakage current can disturb the normal electrophysiology of the heart, leading to the onset of cardiac arrhythmias. Electrical leakage current also can cause electrical shock to a physician during a catheterization or surgical procedure and this may lead to iatrogenic complications.

b) **Misdiagnosis.** If the zero or calibration of the device is inaccurate or unstable, or if the processing circuitry is inadequate, the device may generate inaccurate diagnostic data. If inaccurate diagnostic data is used in managing the patient, the physician may prescribe a course of treatment that places the patient at risk unnecessarily.

Thus, on the basis of these recommendations, the studies conducted by UBTL in developing its draft standard for cardiac monitors, and the relevant medical literature, the AAMI ECG Committee and the Cardiac Monitor Subcommittee (hereafter collectively referred to as "the committee") have attempted to address primarily the clinical risk of misdiagnosis of a patient's condition due to faulty measurement and/or display of ECG data. Nevertheless, other safety considerations are addressed through limits on allowable risk currents, requirements for input circuit protection, and criteria for alarm performance.

The minimum necessary accuracy requirements for cardiac monitors designed primarily for rhythm detection were difficult to determine in view of the variety of applications and ECG devices in this category. A figure of ±20 percent of the input voltage with a lower limit of 0.5 mV was chosen because smaller errors would be difficult to measure, and this level of distortion would not usually prevent proper diagnosis of rhythm disorders. The rationale for this requirement is further discussed in A.4.2.9.8.

The requirements relative to performance parameters have been divided into two categories: those parameters for which minimum or maximum limits have been established and those that the manufacturer need only disclose in device labeling. These categories were developed after extensive committee deliberations. Considerations of user benefit and patient safety, together with available physiological and medical backup documentation, served to categorize device performance parameters into either disclosure requirements or minimum specifications. Inevitably, some parameters were difficult to categorize, and these "borderline" cases were classified according to the committee's best judgment.

Frequency response requirements have been upgraded to extend the low-frequency capabilities for accurate recording of ST-T potentials, as recommended in the AHA recommendations. However, because of the uncertainty in compromising baseline drift with improved low-frequency response, this standard permits the monitor to operate in either of two modes, with an indication to the user of which mode is operable. To test the performance of the monitor in its extended low-frequency mode, an impulse response requirement is imposed, consistent with the recommendations of the AHA in its 1990 report.

Allowable direct currents in sensing patient electrode connections have been reduced while currents through the indifferent patient electrode connection (right leg lead) are allowed to increase, in recognition of the noise reduction benefit that may result. Allowable system noise has been reduced to 30 μV, responding to advances in technology. A more comprehensive view of defibrillator overload protection now takes into account the three separate issues of the recovery of the monitor, reduction in defibrillator energy delivered to the patient that may occur because of the shunting action of the monitor, and operator safety. Slight changes have been made in the requirements for pacemaker pulse rejection, accounting for changes in pacemaker technology since 1984. A new section addressing synchronizing pulses for cardioversion has been added, which is consistent with the recently revised standard for defibrillators.

The requirement to respond to sustained ventricular tachyarrhythmias was discussed in depth during the preparation of the initial standard, but little documented data then existed to permit reasonable testing. A database of documented ventricular fibrillation waveforms has since been made available by Creighton University. Subcommittee members arranged for independent validation of these waveforms, and it is anticipated that this will be completed

Single user license only. Copying, networking, and distribution prohibited.

soon. At that time, the subcommittee will consider releasing an amendment to this standard to include a disclosure requirement for the monitor to alarm in response to the ventricular fibrillation waveforms.

Stored magnetic tape data containing test waveforms were part of the original standard. Several technical problems emerged with some portions of the data, uncovered principally by staff of the FDA test laboratories. At this time, only the arrhythmia waveforms on those tapes are considered to be useful for test purposes. Other waveforms specified for testing may be generated using standard signal generators or special circuits. Efforts are continuing to produce all test waveforms in digital form on reproducible media. When this is accomplished, the subcommittee will consider amending this standard to include this information. In the interim, the signals of Figures 3 and 4 have been converted from the data on the UBTL tapes and are available from AAMI.

A.3 Definitions

A.4 Rationale for the specific provisions of this standard

This section contains the rationale for each of the requirements of section 4. The paragraph numbers below correspond (except for the letter prefix) to those of section 4.

A.4.1 Device labeling

The requirements of 4.1 supplement those mandated for all medical devices by federal labeling regulations (*Code of Federal Regulations*, Title 21, Chapter 1, Subchapter H, Part 801). The additional labeling requirements provided by this standard address specialized information needed for the safe and effective use of cardiac monitors.

A.4.1.1 Device markings

The device itself must be marked with sufficient information to permit identification and traceability of the unit, ensure that controls and switches are adequately labeled, and provide appropriate warnings to users and maintenance personnel.

A.4.1.2 Operator manual

The requirements for the minimum information to be provided in the operator manual supplied with the device are intended to ensure that the user is thoroughly familiar with the capabilities and functions of the cardiac monitor.

A.4.1.2.1 Disclosure of performance specifications

a) **Electrosurgery and diathermy protection.** This test is virtually a copy of its counterpart in the final draft amendment to IEC 60601-2-25 Ed.1 (reference document 2.8). The test is as the title states—a test of protection from damage, not a test of rejection of interference. While there are wide variations in characteristics of electrosurgical generators, it is appropriate to pick characteristics of the most powerful models for use in this test of degree of protection. The defibrillator discharge tests of 5.2.2.2 give precedent to this rationale of testing by using a test circuit that is capable of delivering the maximum allowable energy used by any defibrillator.

   The committee conducted informal polls of medical personnel regularly involved in electrosurgical and monitoring procedures to assess the relative importance of electrosurgery protection. The general consensus was that although monitoring during electrosurgery is desirable, a requirement that cardiac monitors perform to specification during electrosurgery could not be justified on the basis of safety and efficacy considerations. Electrosurgical devices are usually enabled for less than 10 seconds, with periods of at least 30 seconds between ON times. Of primary clinical importance is the ability of the monitor to recover rapidly from overloads so that a proper display and/or heart rate indication is provided during the greater part of the OFF periods.

   4.2.9.14 deals with electrosurgery interference suppression.

b) **Respiration, leads-off sensing, and active noise suppression.** The committee judged that the user should be informed of any current intentionally applied via the monitor to the patient. Although this current must be within the limits established in ES1 (reference document 2.1) and, therefore, should not present a risk to the patient, it may require the use of certain electrodes or cause interference with the operation of other equipment connected to the patient (see also A.4.2.5).

c) **Tall T-wave rejection.** The purpose of this requirement is to prevent double triggering by the QRS and T-wave, resulting in a false heart rate indication (Vincent, et al., 1972). UBTL testing of the capability of monitors to reject tall T-waves revealed that most monitors can reject T-waves with amplitudes up to 60 percent of the R-wave. A half-cycle, sinusoidal T-wave, rather than a triangular wave, was used not only to represent a more realistic T-wave, but also to prevent malfunction of monitors that may use T-wave information to detect QRS complexes.

Single user license only. Copying, networking, and distribution prohibited.

iRhythm, Inc. / Welch Allyn, Inc.
Exhibit 1030
Page 58

In some monitors, the size of tall T-waves that may be rejected may be influenced by the choice of the monitor's high pass frequency.

d) **Heart rate averaging.** The user should be informed as to whether a beat-to-beat heart rate is shown or some other method is employed to calculate minute heart rate. Disclosure of the method of averaging provides a basis of comparison between manual human measurement of heart rate, using a 15 second or 30 second pulse count and the method used by the monitor.

e) **Heart rate meter accuracy and response to irregular rhythm.** The response of the monitor to the specific test signals described in this standard does not ensure a similar response to similar types of rhythms, but it does provide some degree of confidence in the monitor's potential for correct performance. Disclosure of monitor performance with regular but alternating rhythms tells the user whether preventricular contractions (PVCs) will be counted in the heart rate display, and also provides information on the versatility of the QRS pattern recognition scheme in adapting to complex wave sequences. Moreover, this requirement tests the heart rate averaging method used by the monitor (Schoenberg, 1977). UBTL testing indicated that monitor heart rate readings vary widely with the bigeminy-type ECG. The standard does not specify a "correct" heart rate reading; the disclosure requirement simply allows the user to evaluate the performance of the heart rate meter based on his or her particular needs.

f) **Response time of heart rate meter to change in heart rate.** This is a disclosure requirement rather than a minimum performance specification, because although the user should be aware of the heart rate meter's response time, the more critical delays are the time-to-alarm for cardiac standstill and other serious conditions (described elsewhere in the standard). The disclosure requirement for the response time of the heart rate meter is written in terms of an exponential time constant. The time interval measurement comprises the time required for the heart rate meter to indicate 63 percent of the change in rate. Since the heart rate indication may increase in steps due to the update rate of the display, the intent of the requirement is to terminate the time interval measurement when the display first indicates a rate equal to or beyond the calculated value. By relying on the indicated rather than the applied heart rate, the measurement should be less sensitive to heart rate meter inaccuracies.

g) **Time to alarm for tachycardia.** The two waveforms selected as tachycardia test signals are representative of rates and amplitudes encountered in clinical situations. The waveforms have been modified only slightly from actual patient recordings. The most important aspect of the monitor's time to respond is tested by applying a sudden change to these waveforms from one with normal 80 bpm sinus rhythm. The device user should know how long it will take for the monitor to detect and respond to this change.

h) **Pacemaker pulse rejection warning label.** See A.4.1.4. It is appropriate to require this warning even if the monitor behaves correctly for all test waveforms of 4.1.4, because no test suite can realistically cover all clinically encountered signal conditions. Also, pacemaker waveforms continue to evolve, and the range of test waveforms in this standard will inherently lag behind what is used in the field.

i) **Audible alarm disclosure.** The requirement that the type and location of the audible alarm source be disclosed is based on a UBTL survey of intensive care unit (ICU) and coronary care unit (CCU) personnel, who indicated that some type of uniformity in alarm sounds for various emergency equipment is needed (Schoenberg, 1977).

j) **Visual alarm disclosure.** This requirement assists the user of the device in choosing the appropriate monitor for his or her application. Although the aforementioned UBTL survey pointed to a need for standardization of ICU alarm signals, the committee felt that this should be accomplished through voluntary consensus, rather than through specification.

k) **Battery-powered monitors.** Users need information concerning device operating time and battery charge time to operate the device effectively and rely on its performance. Documentation of battery life is difficult in clinical and/or emergency settings; nevertheless, low-battery indication was considered sufficiently important to justify a requirement in the standard.

l) **Telemetry.** The disclosure requirements for telemetry units cover the most important areas of safety and performance: electromagnetic energy transmitted to the patient, electrode attachment, and fault detectors. Still, the ability of the transmitter/receiver to operate reliably in the hospital environment is not ensured by the requirements of this standard. Fidelity and distance of reliable ECG transmission demand further study to determine what type of performance requirement should be established in this area.

m) **Line isolation monitor transients.** When electrodes or lead wires are loose or detached, thereby degrading a monitor's common mode rejection, the monitor becomes susceptible to switching transients from some types of line isolation monitors. (These types momentarily and periodically attempt to pulse the common mode of an isolation transformer's secondary above ground and back again through a large

Single user license only. Copying, networking, and distribution prohibited.

iRhythm, Inc. / Welch Allyn, Inc.
Exhibit 1030
Page 59

impedance. Success in moving the common mode voltage sufficiently verifies that the transformer output is still isolated from ground). The transients may be transmitted to the monitor through the patient cables, and can resemble ECG waveforms. Such signals may inhibit rate alarms and attending personnel may draw inappropriate conclusions regarding a patient's cardiac activity.

n) **Special disclosure requirements for monitors with nonpermanent ECG waveform display.** Nonpermanent displays generally can be designed to provide a variety of vertical and horizontal sensitivities. Disclosure of the device's capabilities in this respect is valuable to the potential user.

o) **Electrode polarization.** The monitor itself may be properly designed so as to recover rapidly after being subjected to overload. However, the monitor is used with leads and electrodes and, in practice, an overload such as that produced by a defibrillator will appear at electrode-to-skin interfaces, causing currents to flow through lead wires and electrodes. Some types of electrodes or electrodes of dissimilar materials may become highly polarized, and thus recovery of the system as a whole may be compromised. The user should be aware of this possibility.

p) **Auxiliary output.** When an auxiliary output is provided, it is important that the user know how to connect an auxiliary device without compromising the risk current characteristics of the instrument. Certain types of connections should be avoided, since the monitor must meet the risk current limits for devices with isolated patient connections. Also, it is important that users know the bandwidth, gain, and propogation delay of the auxiliary output signal so that they can determine for what applications it is suitable. Furthermore, an understanding of how internal pacemaker pulses in the ECG are represented may be important for some applications. In various monitors, those pulses may be removed completely from the ECG, enhanced by adding to the ECG an artificial signal to mark the internal pacemaker pulse, or simply processed along with the rest of the ECG.

q) **Alarm silencing.** Silencing an alarm after it has been activated is a common procedure. It is important that the user know how much time is required for the instrument to be capable of alarming once again, and whether and over what range the reactivation time can be adjusted.

A.4.1.2.2 Application notes

Operational procedures, input conditions, and the electrodes required for the cardiac monitor should be disclosed to help ensure that the electrodes are properly used, and that a reasonably accurate and noise-free ECG signal will be obtained. If the device is equipped for pediatric and/or neonatal use, the settings should be disclosed to ensure correct operation.

A.4.1.3 Service manual

The specific information to be included in the service manual should facilitate reasonable field repair by hospital personnel. The standard requires that the service manual be provided upon request rather than with each delivered unit, because not all hospitals have the in-house capability for field repair.

A.4.1.4 Pacemaker pulse rejection capability

Disclosure of pacemaker pulse rejection capability is required for test pulses of amplitudes up to ±700 mV and durations up to 2 ms. An after-voltage (overshoot) also is specified for the test waveform to follow the main pacemaker pulse, since this component of the pacemaker pulse may be more likely than the main pulse to trigger the monitor's QRS detection circuitry falsely.

Three different conditions simulating realistic clinical situations are used to test pacemaker pulse rejection capabilities. The final report of UBTL's Phase I study on cardiac monitors contains a more detailed analysis of the pacemaker pulse (Schoenberg, 1977). Monitors tested at UBTL for pacemaker pulse rejection capability showed a wide variation in performance; none of the commercially available monitors tested rejected all of the specified pacemaker pulses. Previous studies by ECRI had shown reasonably good performance for pulse amplitudes of 100 mV (ECRI, 1975).

Pacemakers are rarely used in neonates. It may be difficult to monitor the rapidly rising low width QRS of a neonate, which often resembles pacemaker pulses to a degree greater than does an adult QRS. Therefore, it is expected that many neonatal monitors will not be able to reject pacemaker pulses as described in 4.1.4. However, disclosure of this is still valuable to the user.

Pacemaker pulse rejection capability is crucial in some monitoring situations. The user should be aware of the monitor's ability to function effectively with pacemaker pulses present to supervise the patient accordingly. Unfortunately, rapid technological developments in pacemaker design have made it impossible so far to establish, with reasonable certainty, those parameters of pacemaker performance that may affect monitors. In addition, many monitors may perform adequately for the great majority of patients, where pacemaker pulse rejection capability is not

Single user license only. Copying, networking, and distribution prohibited.

iRhythm, Inc. / Welch Allyn, Inc.
Exhibit 1030
Page 60

essential. For these reasons, the committee judged that, for the time being, this aspect of a monitor's performance should be a disclosure requirement rather than a minimum performance specification.

A.4.1.4.1 Pacemaker pulse rejection without overshoot

The specified pulse and overshoot parameters are based upon data developed by several committee members who made oscilloscopic measurements of the surface leads of pacemaker patients. Data was obtained from approximately 100 patients with unipolar ventricular pacemakers and with the newer bipolar ventricular pacemakers. The disclosure requirements and tests apply to both ventricular and dual chamber pacing systems. The amplitude and duration parameters derive in part from a 1979 survey of commercially available pacemakers (also conducted by committee members), which demonstrated that amplitudes from ±2 mV to ±700 mV and durations from 0.1 ms to 2 ms encompass the pulse characteristics of most present-day pacemakers. An earlier study by the AAMI Subcommittee for the Pacemaker Study had indicated that pulse durations for commercially available pacemakers were 0.5 ms to 2 ms, with a typical amplitude range of 2 mV to 400 mV, as measured at the body surface (AAMI, 1975). More recent developments in pacemaker technology have resulted in greater use of lower pulse durations (0.03 ms) and lower pulse amplitudes (.25 mV) (Medtronic, 2001). The range of pulse amplitudes, durations, and overshoots covered in this standard apply only to patients whose pacing electrodes are internal. They do not encompass the range of signals obtained while pacing from body surface electrodes.

A.4.1.4.2 Pacemaker pulse rejection with overshoot

The first and second revisions of EC13 have specified a range of overshoot decay time constants and specified the amplitude of that overshoot as being in the range of 2.5 percent to 25 percent of the main pulse's amplitude, but not to exceed 2 mV. No other guidance was provided. Though never explicitly stated, the implication is that all pacer pulse-overshoot combinations of the specifications provided are valid. Trying to design for worst-case combinations of these parameters is unnecessarily severe. Based on discussions with pacemaker manufacturers and a manufacturer of a pacemaker performance analysis system, pacemaker pulses are coupled to the patient's heart through a series capacitor, and the consequent overshoot obtained is largely due to the value of that capacitor and tissue impedance. As a result of capacitive coupling, the area (in volt seconds) enclosed under the curve of an overshoot seen at the body surface must be (at least nearly) equal to the area enclosed under the main pacemaker pulse. Possible slight nonlinearities in tissue impedance may prevent the two from being truly equal, but this approximation yields much more realistic combinations of overshoot versus time constant than does applying the worst-case combination of parameters in 4.1.4.2.

The area of an exponentially decaying overshoot is equal to the product of its amplitude and decay time constant. Based on this purely mathematical relationship, the overshoot produced by feeding a square pulse through a simple R-C high pass filter cannot have an amplitude other than the area of the main pulse divided by the overshoot's decay time constant. This means that one cannot define overshoot amplitude as a percentage of the main pulse's amplitude independently of the main pulse's area or the overshoot's time constant. Instead, the overshoot percentage is equal to 100 percent X (w/t.c.) where w = the main pulse's width and t.c. = the decay time constant of the overshoot, both in seconds. Main pulse width is defined as the interval from the start of the pulse's rise time to the start of the pulse's fall time.

Using the above information, note that a 2 ms wide pulse with an overshoot decay time constant of 100 ms will produce an overshoot amplitude of 2 percent—fairly close to the 2.5 percent number specified as the minimum in EC13. Likewise, note that a 1 ms wide pulse with an overshoot decay time constant of 4 ms will produce an overshoot amplitude of 25 percent. The shorter time constants are much more likely to be created by more modern pacemakers, which coincidentally are most commonly set at pulse widths no longer than 1 ms. Note that the smaller pulse widths yield proportionally smaller overshoot percentages, some small enough to make measuring them rather difficult—even more difficult if scope overdrive recovery is not properly dealt with. However, using the worst-case pulse/overshoot combinations includes ones that are (by orders of magnitude) physically impossible to generate from capacitively coupled pacemakers. For example, one otherwise-allowed combination is a 2 mV, 100 ms time constant overshoot from an 8 mV, 0.1 ms wide main pulse. The area under a 2 mV, 100 ms decay time constant curve is 0.2 mV/s. To have equal area, a 2 ms wide square pulse must have an amplitude of 100 mV, but a 0.1 ms wide pulse would have to be 2 V tall to have the same area, not the 8 mV tall listed above.

Finally, when using this same signal-generation model for A-V sequential pacer pulses with overshoot, if the decay time constant is one of the longer choices, the overshoot from the second pulse will be larger than for the first pulse. This occurs because there is not sufficient time between A-V pulses for the pacemaker's series capacitor to fully discharge, so that residual charge adds to the charge acquired during the ventricular pulse.

A choice of test methods is provided in this third revision for two reasons. First, it is relatively easy to design a monitor to not classify pacer pulses with no overshoot as heart beats. It is much more difficult to design a monitor that will not classify large amplitude overshoots of long decay time constant as heart beats, particularly if the real heart beat is absent. Note that using the existing rules for constructing pulse versus overshoot combinations allows a 0.4 mV 100 ms time constant overshoot (which overshoot by itself might well be counted as a QRS) to occur from a

Single user license only. Copying, networking, and distribution prohibited.

iRhythm, Inc. / Welch Allyn, Inc.
Exhibit 1030
Page 61

1.6 ms pulse that likely does not even trip the pacer detector. Second, many pacer detector schemes require the monitor's QRS detector to ignore the ECG data stream for an interval following detection of a pacer pulse. Environmental "spikey" electrical noise often occurs at twice the power line frequency, and if it triggers a pacer detector, makes it very difficult for the QRS detector to work with the data that's left. If a QRS detector did not have to ignore ECG portions that contain small narrow spikes and almost nonexistent overshoots, it could do a better job of finding legitimate heart beats and thus serve the user better. A creative pacer detector design could distinguish pacer pulses that were capable of producing overshoots that might be a problem for its QRS detector, if method B is used. Method B allows the test pulses' overshoots to be a smaller percentage for cases where they most likely are in real life, and in the process allows designers to take advantage of it if they so choose. Alternatively, the traditional method (A) may still be used. The pacer pulse shaper circuit provided in Figure D.1 will support either test method.

A.4.1.4.3 Pacer pulse detector rejection of fast ECG signals

Monitors whose pacer detectors can be falsely triggered by fast QRS pulses may give erroneous and erratic heart rate indications. Rather than try to specify a lower limit of slew rate to which a pacer pulse detector is allowed to respond, the committee elected to have the manufacturer disclose the lower threshold of slew rate at which the design's pacer pulse detector typically responds. It is possible that a monitor's pacer pulse detector could have a different threshold while operating in a pediatric or neonatal mode, and, if so, it is appropriate to disclose this also.

A.4.1.4.4 Pacemaker pulse appearance in auxiliary output

Applications such as cardiac assist balloon pumps can be synchronized to pacer pulses in an auxiliary output if the shape is right. Providing information on how pacer pulses appear in an auxiliary output aids potential users of these devices.

A.4.1.4.5 Pacer pulse detector disabling

It is important to make the user aware of control settings or signal conditions that prevent the pacer detector from functioning. For monitoring devices to achieve the most accurate heart rate metering of patients with implanted pacemakers, the devices' pacer detectors necessarily must interact with their QRS detectors. This is to prevent the QRS detectors from falsely picking pacer pulses or their overshoot as heart beats. The interaction is typically to cause the QRS detector to ignore (i.e., to avoid looking for a QRS in) a short time segment of ECG signal following any triggering of the pacer detector. Electrically noisy environments may cause the pacer detector to falsely fire so often that very little ECG signal is allowed to be processed, causing real heart beats to be missed and possibly causing false QRS detections on subparts of ECG signals. All of this causes the heart rate indication to be erratic. In such noisy environments, it may be necessary to disable the display of pacer "flags" (artificial markers) in the ECG waveform so that the ECG waveform itself can be seen. Under these circumstances, a device's rate meter behavior depends strongly on whether or not the device's pacer detector still affects its QRS detector despite not showing "pacer flags" on the display.

A.4.2 Performance requirements

A.4.2.1 Operating conditions

The ranges for line voltage, frequency, temperature, altitude, and humidity are wide enough to allow testing of monitors in most laboratories without the need for environmental test chambers. The specified ranges of operating conditions do not, and are not intended to, provide assurance of the safety and effectiveness of devices intended for use under extreme or uncontrolled environmental conditions outside of a hospital or physician's office. Such devices are excluded from the scope of this standard.

The specified operating range of 104 Vrms to 127 Vrms is based on the recommendations of ANSI C84.1a-1980, *Voltage ratings for electric power systems and equipment* (60 Hz) (ANSI, 1980). The ECRI report, "The Development of Environmental Test Methods for Non-Implantable Medical Devices," provided additional survey data from 23 U.S. hospitals studied in 1975 (ECRI, 1979), recommending an operating line voltage range of 105 Vrms to 130 Vrms for instruments in "subclass B"—devices directly involved in patient care, but not life-supporting. The ECRI survey data, however, revealed no voltages below 104 Vrms or above 129 Vrms; 127 Vrms was exceeded only 0.01 percent of the time. The committee consensus was that the ECRI report essentially verified that the ANSI-specified range, 104 Vrms to 127 Vrms, was appropriate for an AAMI standard addressing minimum performance requirements for cardiac monitors. In those relatively rare instances and locations of higher or lower line voltages, the user may have to choose an instrument that is either designed to withstand voltages greater than 127 Vrms or can be operated at line voltages below 104 Vrms.

Single user license only. Copying, networking, and distribution prohibited.

iRhythm, Inc. / Welch Allyn, Inc.
Exhibit 1030
Page 62

A.4.2.2 Overload protection

A.4.2.2.1 AC voltage

The recommendations of a draft International Electrotechnical Commission (IEC) standard for electrocardiographs (IEC, 1978) were adopted. The 1 V p-v differential signal represents a noise level approximately 100 times the maximum signal. The need for such a test derives from the possibility that the monitor input leads may inadvertently be exposed to power line currents from other devices. The test is for power line frequencies, and neither duplicates nor replaces the requirements and test for defibrillator protection.

A.4.2.2.2 Defibrillator overload protection

Defibrillator overload protection is necessary for most cardiac monitors, since in the hospital environment any given monitor might be used on patients potentially requiring defibrillation. In the test circuits, the values of L and the series resistor have not been changed to harmonize with otherwise identical IEC requirements, since at the time of this writing, the IEC test circuit is in a state of flux.

A.4.2.2.2.1 Recovery

A defibrillator-protected device must continue to function after exposure to the short-duration high voltages of a defibrillator discharge. The ECG monitor should be capable of recovering from the overload conditions within a few seconds after the defibrillator pulse, to give an indication of the presence or absence of the ECG and the persistence of fibrillation.

The American National Standard, *DF2* (reference document 2.3), specifies a maximum selectable deliverable energy in the range of 250 joules (J) to 360 J. The energy and voltages that the monitor sees as a result of a defibrillator discharge depend on the relative resistances of the human torso, the placement of the paddles relative to the ECG electrodes, the skin-to-electrode resistance, and the effective impedance of the monitor. The equivalent circuit is shown in Figure A.1, where the defibrillator is simulated by a capacitor (C) charged to voltage (V) and the stored energy (E) is given by $E = 1/2\ CV^2$.

For example, a capacitor of 32 µF charged to 5000 V will have a total stored energy of 400 J. This value has been proposed by the IEC as a worst-case value for purposes of defining a defibrillator overload test circuit. Using a total series resistance of 11 ohms (as indicated in Figure 9A), 360 J will be delivered into the test load, which corresponds to the maximum allowed by the AAMI defibrillator standard.

Any arc-overs that occur in ECG circuitry during defibrillator discharge testing may leave behind slightly conductive paths on circuit boards, etc. Often, such paths' conductivity is low enough that all normal ECG monitoring functions work fine with the added shunt impedances. However, many leads-off sensing circuits cannot work properly if such leakage paths occur from an electrode input to circuit common, or to another electrode input. For this reason, it is appropriate to verify after defibrillator testing that leads-off sensing still works for each individual electrode.

A.4.2.2.2.2 Reduced energy delivery

The human torso and defibrillator paddle/skin resistance, under high energy discharge, varies over a wide range, with a mean of 67 ohms and standard deviation of 36 ohms (hence m + SD = 103 ohms) in a recently published study by Kerber, et al. (1981). The 100 ohm resistance specified in this standard fairly represents the worst-case voltage and power duration that the monitor would see. The skin-to-electrode impedance (R_s) and the internal net impedance of the monitor under defibrillator overload (R_i) are highly variable.

The monitor should not inadvertently shunt defibrillation currents from the patient. The result might be reduced efficacy of defibrillation, burning of the patient at the electrode contact sites, and reduced likelihood that the electrode could continue sensing the ECG. These problems are minimized by allowing the device to absorb no more than 10 percent of the energy intended for delivery to the patient.

Single user license only. Copying, networking, and distribution prohibited.

iRhythm, Inc. / Welch Allyn, Inc.
Exhibit 1030
Page 63

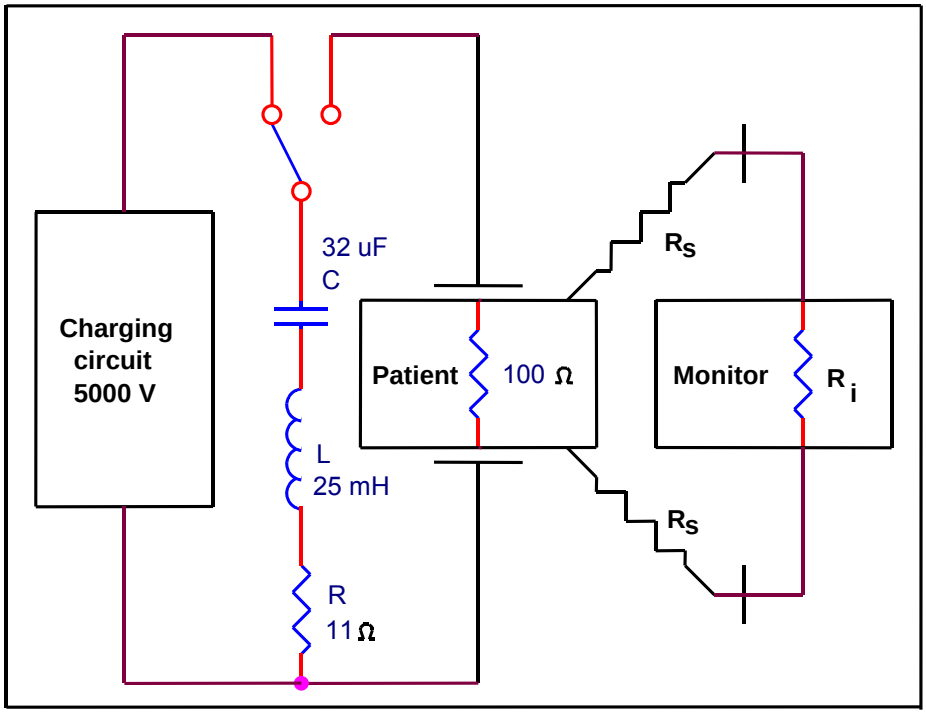

Figure A.1—Equivalent circuits for defibrillator discharge

A.4.2.2.2.3 Operator safety

The requirement of 4.2.2.2.3 is intended to limit the hazard that may exist to an operator in contact with a device connected to a patient being defibrillated. The measurement circuit can be understood as a charge integrator, since for any ECG device approaching the 100 µC limit, the voltage (V1) would be large relative to 1 volt.

For line-powered devices with intact chassis ground, this hazard is minimal or nonexistent from operator-accessible chassis points or electrocardiograph controls. With a defective ground or no ground, the opportunity exists for accumulation of charge and subsequent shock to an operator. Battery-powered devices and line-powered devices with the power cord disconnected may be most vulnerable in this respect.

In animal tests conducted by Schoenberg, et al. (1979), ECG electrodes were placed 3 cm away from the defibrillator paddles. At an energy of 300 J and a peak defibrillator voltage of 6000 V, the peak voltage recorded in the ECG electrode cable was 1000 V. Extrapolating this data to 400 J and 5000 V peak at the defibrillator, peak voltage in the ECG electrode cable would be 1100 V.

Notwithstanding the possible presence of a power line connection, however, any exposed metal on either portion of the ECG connector (or its partly exposed metal shroud that is exposed by virtue of not being fully inserted) constitutes a possible shock hazard to the operator if the operator is touching that exposed connector while a connected patient is defibrillated. If the ECG connector with the exposed metal has big enough spacings, no arc will occur and the test will not fail because of the exposed metal.

Doing the operator safety test with the charge-measuring circuit connected only to the ECG cable-to-monitor connection system's exposed or potentially exposed metal is consistent with IEC 60601-2-27, Section 17.101b (reference document 2.7), and EC53, Section 4.5.1 (reference document 2.4).

The test method adopted in this standard sets R_s at 400 ohms, a very low value for skin-to-electrode impedance, which puts a greater burden on the electrode, both in terms of ability to absorb power and maximum voltage attained. Therefore, the test method of 5.2.2.2, utilizing 5000 V and 360 J, represents an overload several times more severe than would normally be encountered in actual practice. This ensures that significant safety factors are built into the monitor.

Single user license only. Copying, networking, and distribution prohibited.

iRhythm, Inc. / Welch Allyn, Inc.
Exhibit 1030
Page 64

A.4.2.3 Risk current

Cardiac monitors are intended to be deliberately connected to patients by conductive electrodes or wires. Frequently, monitors are used for critically ill patients having catheters and pacemakers connected to their hearts. Therefore, the highest level of protection against risk currents must be provided. Thus, it is appropriate for cardiac monitors to meet the "isolated patient connection" requirements of the ANSI/AAMI standard, ES1 (applicable document 2.1).

A.4.2.4 Auxiliary output

Auxiliary output requirements are most often dictated by the type of recording or display device connected to the monitor. Generally, the recommendations of the AHA should be followed. The committee did not deem it necessary to enumerate detailed requirements for auxiliary output, but it was agreed that safety and efficacy demand, at a minimum, that a short-circuited output not damage the instrument and that risk current requirements not be degraded when auxiliary devices are connected to the monitor.

A.4.2.5 Respiration, leads-off sensing, and active noise suppression

The 0.2 µA limit on direct current that was specified in the 1983 cardiac monitor standard was arrived at by compromise after considerable committee debate. Most manufacturers of cardiac monitors would have preferred that this limit be much higher (0.5 µA or 1 µA) to allow greater flexibility in design of input circuitry and such features as leads-fault sensing. A higher current level, however, would have posed a problem for disposable ECG electrodes. Tests conducted at UBTL showed that at 1 µA currents, most electrodes will polarize to above 100 mV within a few hours. Tests of four types of silver-silver chloride electrodes demonstrated that 0.5 µA also will cause polarization to greater than 100 mV within 15 minutes of the current application. One type remained unaffected for 16 hours, but then polarized to 100 mV at 20 hours, reaching 500 mV at 90 hours. At 0.2 µA, all four types of electrodes showed no significant deterioration after 40 hours. Thus, a requirement establishing a direct current limit of 0.2 µA represented a reasonable compromise between the exigencies of monitor and electrode design.

During revision of the 1983 standard, the direct current limit was reduced for amplifier inputs and increased for other connections such as RL, relative to the original limits. It was recognized that whereas currents in inputs should be kept low to keep electrode offset voltages within the limits of the amplifier, the same constraint need not be imposed on the RL electrode. The 0.1 µA level for inputs is the same value as that recommended in the draft IEC standard for electrocardiographs, IEC 62D(C0)17 (1987). For other connections, the 1 µA level is the value recommended by the AHA.

A.4.2.6 QRS detection

A.4.2.6.1 Range of QRS wave amplitude and duration

It is essential that the monitor correctly sense the QRS complex and exclude other signals or noise if the heart rate meter and alarm system are to operate properly. The lower recognition limit of 0.5 mV may not encompass the smallest QRS complexes encountered in the clinic; on the other hand, establishing a detection threshold lower than 0.5 mV may increase the possibility of false alarms. A monitor should not respond to signals below 0.15 mV or short duration spikes, to prevent the monitor from responding to spurious signals when actual cardiac arrest exists. If ECG amplitudes below 0.15 mV are encountered in the clinic, electrode placement would have to be altered to obtain a signal of greater amplitude. However, for neonates, the placement of electrodes is often dictated by factors other than obtaining the best ECG signal, and lower amplitudes will be encountered. Alternatively, if the signal cannot be increased, the critically ill patient would have to be observed continuously by intensive care personnel, since currently available monitor alarms cannot be expected to be fairly reliable in the presence of QRS amplitudes much smaller than 0.3 mV. In some neonates, biphasic QRS complexes with total duration nearly as brief as 20 ms can occur. If neonatal/pediatric monitors attempt to reject the 1 mV, 10 ms test pulses, an appreciable percentage of real neonatal pulses also would be rejected.

The amplitude, slope, and duration range of the QRS signals specified are discussed in more detail by Berson and Pipberger (1978); Berson, Lau, Wojick, and Pipberger (1977); Berson, et al. (1977); Helppi, et al. (1973), Schaffer and Haas (1962); Schoenberg (1977); and Schoenberg, et al. (1977).

A.4.2.6.2 Line frequency tolerance

The QRS detection circuitry of the monitor should reject a reasonable amount of the most commonly encountered noise in the clinic; otherwise, improper heart rate detection would occur in too many instances. The 100 µV p-v minimum reflects a signal-to-noise ratio of 5:1.

Noise at frequencies other than power line frequency (random noise) results from several factors, including the myoelectric potentials from the patient. Random noise is generally lower in amplitude than line frequency noise and can be reduced substantially by the use of proper recording techniques. Slow baseline variations can almost always

Single user license only. Copying, networking, and distribution prohibited.

iRhythm, Inc. / Welch Allyn, Inc.
Exhibit 1030
Page 65

be eliminated by proper electrode application. Unfortunately, there is little hard data available regarding the amplitude and frequency distributions of random noise over a wide spectrum of patients and environments, and therefore a realistic test method could not be developed.

On this basis, the committee decided not to attempt to specify performance in the presence of random noise. The performance requirement for line frequency noise tolerance will give some assurance of the device's capability in this regard. Voluntary disclosure of line frequency and/or random noise tolerance capability by the device manufacturer is encouraged, provided that a description of the random noise tolerated by the instrument is included to allow testing for verification; the basis for the particular noise characteristics chosen also should be described.

A.4.2.6.3 Drift tolerance

The QRS detector must be able to handle a certain amount of baseline wander. Again, the intent of this requirement is to ensure a minimum capability and provide the user with important performance parameters. The triangular waveform with a slope of ±0.8 mV/s (as described in the test) would be encountered clinically with bad electrodes or motion artifact.

The drift tolerance test originally also included random noise tests, which were subsequently deleted because of the difficulty of developing a "standard noise" source. Commercial white-noise generators usually do not provide enough energy in the 1 Hz to 100 Hz band and (in this range) are overpowered by the line frequency component. Further study in this area is needed. (See also A.4.2.6.2.)

A.4.2.7 Range and accuracy of heart rate meter

The minimum required range and maximum allowable error are set at what were deemed reasonable values based on the UBTL literature search (Schoenberg, 1977). The ±10 percent or ±5 bpm allowable error is consistent not only with both clinical needs and current technological capabilities, but also with the specification in the French standard for monitors.

The committee obtained advice from several neonatal/pediatric cardiologists regarding the upper range of heart rate detection that should be specified for monitors labeled for use with neonatal/pediatric patients. Their view was that 220 bpm was too low for the upper value for the range because clear-cut sinus rhythm at 220 bpm is not unusual in babies and infants. An upper value of 250 bpm makes it less likely that normal sinus tachycardia will be confused with supraventricular tachycardia.

The performance requirements for the heart rate meter in cases where the rate of the input signal is outside the meter range stem from committee concern about reported instances of falsely low monitor readings in the presence of extremely high heart rates. A study at Duke University Medical Center revealed that treatable tachycardias at rates up to 300 bpm occasionally occur in neonatal/pediatric and adolescent patients (Benson, et al., 1982). Such patients must be protected from falsely low heart rate meter readings and consequent alarm failures.

A.4.2.8 Alarm system

The requirements for visual and/or audible alarms are intended to enable ready location of the alarm condition in a multi-unit ICU. The standard does not prohibit placing the alarm system at a central monitor console that is constantly attended by intensive care nurses. Both users and manufacturers, during public review of UBTL's initial recommendations, indicated that it is sometimes desirable not to place the alarms at bedside because of the possible adverse psychological effects on patients occasioned by loud alarms and flashing lights.

A.4.2.8.1 Alarm limit range

The alarm limit setting range specified corresponds to the minimum heart rate range that must be detected.

A.4.2.8.2 Resolution of alarm limit settings

The minimum increment of the alarm setting is a parameter of vital importance in those instances where a patient's heart rate is outside the medically established limits for that individual. It is logical to require that the user be able to set the heart rate alarm limit to a precision consistent with the accuracy requirements for the heart rate indicator.

A.4.2.8.3 Alarm limit accuracy

Alarm limit accuracy is crucial to safety and efficacy when critically ill patients are involved. The accuracy requirements for alarm limits are consistent with those specified for the heart rate indicator.

A.4.2.8.4 Time to alarm for cardiac standstill

The time to alarm for cardiac standstill has been set at 10 seconds—a value that appears to be compatible with the time needed to respond to a cardiac emergency, yet high enough to prevent too frequent alarms due to transients in

Single user license only. Copying, networking, and distribution prohibited.

iRhythm, Inc. / Welch Allyn, Inc.
Exhibit 1030
Page 66

heart rate or artifact caused by patient movement. The French standard specifies 15 seconds as the time to alarm, but many users felt this was excessively long.

A.4.2.8.5 Time to alarm for low heart rate

See A.4.2.8.4.

A.4.2.8.6 Time to alarm for high heart rate

See A.4.2.8.4.

A.4.2.8.7 Alarm silencing

The ability to deactivate audible and visual alarms temporarily means that the user can respond without distraction to the critical situation signaled by the alarm. In multi-bed intensive care units, the inability to reset the alarm could create a "bedlam" of visual and auditory stimulation detrimental to both the patients and the health care staff. A sensible alternative is to have the monitor automatically reactivate its alarm soon after reset if the alarm condition persists. This will alert personnel to the continuation of a condition that might otherwise go undetected once the alarm is reset.

A.4.2.8.8 Alarm disabling

Sometimes it is necessary to disable the alarm system, such as when changing the electrodes or bathing the patient. The disabled condition, however, must be apparent, or the user could inadvertently fail to rearm the alarm system, which could have adverse consequences for the patient.

A.4.2.9 Special requirements for monitors with ECG waveform display capability

As noted earlier (see A.2), the Type II requirements set forth in the FDA/UBTL fourth draft standard for electrocardiographic devices were incorporated into this cardiac monitor standard so that the document could be all-inclusive. The rationale for these requirements is much the same as that for the corresponding requirements for diagnostic electrocardiographic devices, in terms of the qualitative need for the specifications. In some cases, however, the quantitative level of the requirements (e.g., maximum allowable error in signal reproduction) is lower for monitors, since the accuracy of the displays is not as critical for monitoring functions as it is for diagnostic purposes. As noted earlier, monitors that provide selection between monitoring and diagnostic functions must meet the requirements of both this standard and the American National Standard, *Diagnostic electrocardiographic devices* (reference document 2.2).

A.4.2.9.1 Input dynamic range

The specified ±5 mV differential signal is a minimum insofar as some abnormal ECGs, particularly in neonatal/pediatric patients, may exceed this value. The AHA's recommendation of 10 mV p-v constitutes a very similar requirement, except that it would stipulate a third gain of a zero offset capability. The IEC standard requires a ±5 mV capability, in addition to a mandatory capability for baseline adjustment of at least ±40 percent of the effective recording width, unless the recording width is 50 mm or greater. It is a good idea for monitors to have the capability of displaying a 10 mV p-v signal and provide for a baseline shift. Data from two different (unpublished) sources was provided to the committee regarding QRS amplitudes for precordial leads. One source reported amplitudes up to 5.3 mV and 7.6 mV for R and S waves, respectively, from a study of about 1,900 adult ECG records. The second source reported that it is not unusual to record amplitudes of about 10 mV, particularly in lead V4, for infants with ventricular septal defects.

In 1983, the following justification was used for specifying 320 mV/s response capability:

> The response capability of 320 mV/s was established on the basis of the existing capability of commercially available direct writers. Variation during the QRS complex can reach 400 mV/s, and a comparable response capability is recommended by the AHA. This speed is a very desirable feature, judging from the results of the UBTL literature search with respect to high-frequency content of the QRS (Berson and Pipberger, 1978; Schoenberg, et al. 1975). The apparent limitations of available pen motors, however, restrict the slew rate to about 1600 mm/s and hence to the 320 mV/s requirement of this standard, at a gain of 5 mm/mV. The AHA also recognized this restriction; its recommended frequency response test requires only a 5 mm p-v signal response at 100 Hz, which translates to a maximum slew rate of 1570 mm/s. Increasing the AAMI requirement would necessitate substantial redesign of monitors and the use of more powerful pen devices. For monitors with nonpermanent displays, the slew rate of 1600 mm/s does not generally limit maximum capability. Filtering of noise, however, is more important than high accuracy, and hence the 320 mV/s limit applies.

(See also A.4.2.9.8.)

Single user license only. Copying, networking, and distribution prohibited.

iRhythm, Inc. / Welch Allyn, Inc.
Exhibit 1030
Page 67

Although currently available direct writers no longer limit this, 320 mV/s continues to be appropriate for a monitor that has a bandwidth significantly lower than that of a diagnostic electrocardiograph. However, if the monitor has an operator selectable mode labeled "diagnostic," it must meet the requirements specified in the American National Standard, *Diagnostic electrocardiographic devices* (applicable document 2.2).

It is essential that monitors perform adequately in the presence of substantial dc offset voltages. The AHA and early drafts of the FDA/UBTL standard for ECG devices recommend that electrocardiographs and monitors be capable of withstanding dc offset voltages of at least 200 mV, whereas the IEC insisted on a ±300 mV capability. Since the higher value provides a greater margin of effective operation, particularly after overload, and since harmonization between national and international standards was considered important, the committee ultimately decided to specify a ±300 mV minimum requirement.

The 300 mV capability is desirable both for direct writers using reusable electrodes and for monitors employing disposable-type electrodes. Reusable electrodes coated with silver-silver chloride do not pose a problem when new. It is only after thousands of uses and cleaning cycles that the coating becomes worn and some corrosion may occur. Under these circumstances, large polarization voltages may result. The characteristics of disposable electrodes have been studied extensively by UBTL (Schoenberg, et al., 1979).

ECG distortion such as clipping or soft saturation, as caused by dc offset in the ECG signal, is not acceptable. In some cases, such behavior may not be sufficiently obvious to the observer, and could lead to false conclusions about the ECG signal. For these reasons, an automatic indication of such problems must be provided.

With some modern circuitry, it can be somewhat difficult to eliminate discontinuities if the electrode offset voltage slowly changes beyond certain device-dependent thresholds. The 30 μV limit in baseline shift with a ramp input is intended to challenge the monitor to cope with unavoidable changes in offset at the input to the ECG. Note that this test is not a test of ability to keep a trace on screen at a gain sufficient to resolve discontinuities of 30 μV. (Drift tolerance *per se* is checked by 4.2.6.3.) For reference, when a single pole 0.05 Hz high pass filter has a 1 mV/s ramp fed into it, the filter's output is a 3.18 mV dc signal. The monitor's trace centering may or may not be able to display a trace with this offset at a display gain high enough to accurately resolve 30 μV.

A.4.2.9.2 Input impedance

The input impedance requirement is dictated primarily by the skin-to-electrode impedance over the effective frequency range of the ECG signal. The skin impedance problem has been studied by a number of investigators (Almasi and Schmitt, 1970; Berson and Pipberger, 1968; Schmitt and Almasi, 1970; Spach, et al., 1966) who have shown that the impedance decreases with frequency and the time after electrode attachment. The method and location of attachment, electrode paste, and type of electrode all influence impedance. Interestingly, the commonly-used suction electrode with paste produces the highest impedance—a geometric mean value of 17.8 kilohms for the chest and 44 kilohms for leg attachment without skin preparation. The worst location is the outer forearm, with a 10 Hz mean impedance of 49 kilohms (Almasi and Schmitt, 1970). Almasi and Schmitt concluded:

> If we are to use conventional ECG electrode preparations, we must provide measuring systems with sufficient input impedance so that practically all expected subjects will be measured without significant errors. We must, furthermore, provide automatic warning when appropriate limits of impedance are exceeded. Otherwise, we must knowingly accept the penalty of erroneous measurement in a chosen significant percentage of cases. . . . By all ordinary criteria, we should certainly aim to lose not more than 1 percent of the patients to inaccurate recording. This leads to the hard fact that patients with impedance on the order of 200,000 ohms are really to be expected, and this, in turn, means that instrument input impedance, not simply resistance, should be at least 10 to 20 megohms. This is a value that can be met by very good and fairly expensive electronic practice, but one that is not easily met with ordinary vacuum tube or transistor amplifiers, especially when they are at the end of long shielded cables. (p. 509)

The AHA recommends a 5 megohm differential input impedance, acceptable under conditions where the 10 Hz skin-to-electrode impedance is less than 50,000 ohms, when measured with a 10 μA or less current, for most of the expected population. These conditions can only be guaranteed if some preparation is performed, such as lightly sanding or rubbing with alcohol the skin of the leg and arm areas to which the electrodes will be attached. In setting the requirement of this standard, the input impedance was chosen as the maximum consistent with current monitor and electrode cable design.

The IEC's draft standard initially required a much lower input impedance; despite this, the requirements of the IEC and AAMI standards are now harmonized at a 5 megohm differential input impedance. The test method and the requirements are expressed in terms of a single-ended input impedance of 2.5 megohms. The input impedance can be approximately one-half of this value at 100 Hz, since the patient cable capacitances tend to limit the input impedance at higher frequencies. The test method simulates, by means of a 4.7 nF capacitor connected in parallel with a 0.62 megohm test resistor, the drop in skin-to-electrode impedance as frequency increases.

Single user license only. Copying, networking, and distribution prohibited.

iRhythm, Inc. / Welch Allyn, Inc.
Exhibit 1030
Page 68

Another study by Schmitt and Almasi (1970) included 142 males and 76 females. Researchers found that 10 Hz impedances exceeded 140 kilohms in 5 percent of the males and exceeded 220 kilohms in 5 percent of the females. These values represent the sum of the skin-to-electrode impedances for two suction electrodes applied with Redux paste after gentle rubbing. The investigators noted that the data follows a logarithmic (not a simple linear Gaussian) distribution.

Berson and Pipberger (1968) studied 24 males with flat plate electrodes applied, similarly to those described above, to three precordial sites. A similar distribution of impedances was found, but the values obtained were generally lower because skin-to-electrode impedances were computed for individual electrodes rather than for pairs. Impedances exceeding 74 kilohms at 10 Hz were found for 5 percent of the measurements. In addition, pair-wise differences in impedance exceeding 84 kilohms also were found for 5 percent of the measurements.

The input impedance specified in this standard is intended to assure that skin-to-electrode impedances of less than 50 kilohms in any one electrode will produce an error of less than 2 percent. For the worst-case situation, however, where all electrodes involved in the lead measurements have an impedance of 250 kilohms, the error will be 10 percent. Table A.1 indicates that 98 percent of the ECGs taken with the usual skin preparation will exhibit skin-to-electrode impedance errors of less than 10 percent. Since impedance depends upon electrode area, this data should be similar for monitoring electrodes, which have areas comparable to those of small suction electrodes. In most nonshielded locations, skin-to-electrode impedances much above 100 kilohms will probably cause excessive noise in the ECG recording. Hence, better application of the electrode would probably be the only recourse.

Table A.1—Extreme expected values of impedance (1 electrode) for a typical population

Percentage of population excluded	Forehead	Chest	Leg
50	3.28	17.8	44.3
10	6.93	52.1	140
5	8.55	71	193
2.5	10.3	93.3	257
1	12.8	128	368
0.1	20.1	248	713

NOTE 1—All values in kilohms; frequency is 10 Hz. The table entries in columns two, three, and four represent values of impedance magnitude for one electrode that should be exceeded at the indicated body location by the percentage of the population shown in column one. The data is for 15 mm suction electrodes used with Sanborn Redux paste. Computations are based on the log-normal distribution model for the 20-subject sample (Almasi and Schmitt, 1970).

NOTE 2—Impedances for females are about 50 percent higher than those shown for males in the above table.

A.4.2.9.3 System noise

Noise in the ECG record is one of the most persistent obstacles to a clean, diagnosable signal. This problem, however, generally can be traced to external interference (e.g., EMI), patient movement (myographic signals), or poor technique in electrode application or routing of cables. Most manufacturers provide guidelines for correct techniques in measuring ECG. Shielded cables, as well as high input impedance and common mode rejection, alleviate some of the noise problems. The “driven right leg,” which helps cancel the common mode noise from the signal sensed at the electrodes, further reduces the noise. For the limited bandwidth of the monitor, 30 μV of allowable noise is well within the capability of modern amplifier designs, increasing the likelihood that low amplitude P waves, often diagnostically important, are able to be discerned. This test is specified with any line frequency notch filter set to be active, so that only the circuit noise of the monitor is measured, rather than including outside line frequency interference.

A.4.2.9.4 Multichannel crosstalk

The 5 percent specification is consistent with the desirability of keeping noise due to crosstalk below the normal level of resolution at the output of one channel, when a second channel is dealing with an input signal encountered in normal situations.

A.4.2.9.5 Gain control and stability

The required gain setting of 10 mm/mV for direct writers reflects a well-established convention. Both the IEC and the AHA recommend 5 mm/mV and 20 mm/mV as additional gain settings for diagnostic electrocardiographs. Although

Single user license only. Copying, networking, and distribution prohibited.

iRhythm, Inc. / Welch Allyn, Inc.
Exhibit 1030
Page 69

these additional gain settings were considered desirable features for most recorders, they were not, because of their infrequent use for cardiac monitoring, specified as a minimum requirement in this standard. Given the requirement for a ±5 mV dynamic range, a channel width of 5 cm is necessary for a 5 mm/mV gain setting. Conversely, if the display is narrower, a lower gain setting (e.g., 2.5 mm/mV) must be provided.

Continuous gain control is permissible, since many monitors serve as recorders for other physiological signals, which may require a variable gain. Automatic gain control, often employed in monitors, must have override capability; otherwise, functional testing of the device becomes very difficult. The total allowable gain drift amounts to half of the total allowable system error.

The gain stability of a monitor is important in minimizing indicated amplitude changes in the ECG signal that do not result from physiologic changes. Testing for gain stability over a time period of about 5 minutes and for more than 60 minutes ensures that the device will be useful for observing both short- and long-term variability in amplitudes.

A.4.2.9.6 Time base selection and accuracy

The accuracy of the time base of an ECG monitor is important in establishing many diagnostic parameters related to time, such as P-R and Q-T intervals and QRS duration. A minimum requirement of 10 percent accuracy for time intervals from 0.2 seconds to 2 seconds limits the transport motor and paper slip to a value that will create no more than a ±20 ms error for short-interval measurements such as QRS duration. A more accurate transport would be desirable; however, a smaller error requirement would not only be difficult to measure, but also very difficult to maintain, given the variation in line frequency and environmental effects on the recording paper and variation in stylus friction. Nonpermanent displays should provide a time base that does not vary widely over the display window to minimize artifactual variations in heart rate display.

A.4.2.9.7 Output display

For monitoring devices, particularly where compactness and portability are required and resolution and accuracy are not paramount, a 30 mm channel width is consistent with both a gain setting of 2.5 mm/mV and a maximum ±5 mV ECG signal. This gain setting applies to permanent and nonpermanent displays alike. Other types of direct recording media, such as photographic processes, are acceptable as long as they offer at least the same resolution of amplitude and time as the ruled medium.

An aspect ratio of 0.4 ms/mV is specified, since it corresponds to the aspect ratio users have become accustomed to for permanent displays with 10 mm/mV and 25 mm/s sensitivities.

NOTE—Requirements of “Trace width and visibility,” “Rectangular coordinates/alignment of writing points,” “Time and amplitude rulings,” and “Time and event markers” that were in the AAMI EC13 standard of 1992 have been deleted in the 2002 standard. All of these requirements were relevant when permanent displays with heated stylus pen recorders and photorecorders were in use. With the current digital thermal writers, these requirements have no specific value.

A.4.2.9.8 Accuracy of input signal reproduction

In specifying the total error of an ECG monitoring system, one can combine the errors of several sources to yield a total error. For a simple error analysis related to the reproduction of amplitude, let the ideal output signal (S) be given by $S = KV_D$, where V_D is the ideal differential voltage applied to the differential amplifier and K is the ideal gain of the system. The actual signal (S_o) can be written:

$$S_o = K(1 + e_k + e_h + e_f)|V_D(1 + e_n + e_r)|$$

where

e_k = the fractional error in gain and non-linearity of the amplifier

e_h = the error due to hysteresis of the output display

e_f = the error due to the linear frequency distortion of the system

e_n = the error due to system noise

e_r = the error due to inaccurate summation of the electrode voltages

Then the total percent error (E) is expressed as:

$$E = 100(S_o - S)/S = |(1 + e_k + e_h + e_f)(1 + e_n + e_r) - 1|$$

$$E = (e_k + e_h + e_n + e_r + e_f)100$$

Note that in the last equation, second order items have been dropped.

Single user license only. Copying, networking, and distribution prohibited.

iRhythm, Inc. / Welch Allyn, Inc.
Exhibit 1030
Page 70

Thus, the overall error, if all individual errors add up in the same direction, is the sum of the gain error, the hysteresis error, the error due to inadequate frequency response, the noise error, and the error due to incorrect summation of the central terminal or reference voltages. If this error is to remain within the overall error band of ±20 percent, an instrument would have to be fairly accurate.

The accuracy requirement of ±20 percent applies to input signals down to 500 µV, since 20 percent of this value is 100 µV, which corresponds to 1 mm at the highest required gain. For input signals below 500 µV, errors no greater than 100 µV are expected.

The sinusoidal test down to 0.67 Hz evaluates the device's low-frequency performance when in the "monitor" mode. The impulse response test evaluates its extended low-frequency performance when in the "diagnostic" mode. A time constant specification is not known to add a meaningful requirement over the impulse response requirement.

The committee recognized that a complete specification of frequency response should address phase distortion. This was not done, however, because of the problem of measuring phase shift for frequencies above 25 Hz at the required time base of 25 mm/s. Time bases of 400 mm/s would be necessary to measure the 40 Hz signals accurately. Furthermore, phase distortion is most critical for low-frequency response. It is not an issue if the monitor operates in the non-extended low-frequency response mode. However, as discussed later in this section, the monitor must be capable of operating with extended low-frequency response. The impulse response requirement tests this capability with a relatively easy-to-apply procedure, and is an alternative to a requirement for phase linearity.

The high-frequency response limit of 40 Hz is based on two considerations. First, the primary purpose of cardiac monitoring is to identify rhythm; this can be adequately accomplished without a higher frequency response. Second, the persistent noise problem resulting from power line frequencies can be reduced considerably with the 40 Hz bandwidth. Further bandwidth reduction would not provide a significant design advantage.

The committee deemed it appropriate to specify two test methods to evaluate the frequency response and ability of the monitor to deal with electrocardiographic-like signals, hence, the introduction of a triangular wave signal simulating the R wave. Allowing a 25 percent reduction in the peak value of the triangular input signal of 4.2.9.8 corresponds to the expected response at the high-frequency end from a traditional single pole analog system with 40 Hz bandwidth. The impulse response test is employed again to simulate the R wave and readily observe whether the monitor produces baseline changes following the impulse that, with a real ECG input signal, may be falsely interpreted as ST changes. The impulse response requirements are consistent with the 1990 AHA recommendations. Because some monitors actually change their low-frequency response for an interval following triggering of their pacer detector (which affect the results of this test), it is useful to define alternative test signals that have the same area but will not trigger a pacer detector. Alternatively, the pacer detector can be literally disabled during the test.

The stylized waveform of Figure 6 will challenge the device to perform properly over the ranges of amplitudes and slew rates that may occur in practice. The 20 percent allowable error is well within the capabilities of present technology, yet it suffices to meet the overriding capability for identifying cardiac rhythm.

The 1989 AHA recommendations (Mirvis, et al., 1989) influenced the subcommittee regarding the need for monitors to be able to faithfully record ST-T segments, but the subcommittee concluded that this feature could compromise real-time monitoring where baseline wandering is an important consideration. Thus, this standard requires that the monitor be able to record with an extended low-frequency response, but allows for operator selectable modes for also recording in real-time without the extended low-frequency response. Designs with only one mode which allow real-time monitoring together with the extended low-frequency response are not precluded, and may be more preferable for some users. Digital technology may allow designs to achieve the extended low-frequency response with delays on the order of 0.1 s or 0.2 s. With operator selectable modes, this standard requires that the mode in use be indicated on the recording medium so that the user can judge whether ST-T deflections are being recorded with the extended low-frequency response.

The relaxation of low-frequency response to 0.67 Hz is based on heart rate data in studies from the Framingham Heart Study (Garrison and Levy) and Simonson (Simonson, 1961; and Simonson, et al., 1949). These studies indicate that 44 bpm encompass more than 99 percent of adult heart rates with intra-individual RR interval variation less than 0.126 s. Thus, a lower bound of 40 bpm (0.67 Hz) exists for 99 percent of adults, 90 percent of the time. Bailey and coworkers used this data to justify the 0.67 Hz low-frequency bound in their 1990 report of recommendations of the AHA (Bailey, et al., 1990).

A.4.2.9.9 Standardizing voltage

The standardizing voltage measures the ability of the system to produce a signal relative to a traceable standard. Standardization only partially measures system accuracy in that it does not generally include the input buffer circuits, nor does it indicate any deviation of the internal calibration signal from a true 1 mV signal. In fact, many ECG devices use a constant voltage injected at a convenient intermediate gain stage. The requirements of 4.2.9.9 are intended to

Single user license only. Copying, networking, and distribution prohibited.

iRhythm, Inc. / Welch Allyn, Inc.
Exhibit 1030
Page 71

provide the user with a reasonably accurate indication of the gain and frequency response characteristic. Absolute calibration by a known mV source is verified in 4.2.9.8 and 5.2.9.8. Permitting the use of an alternative waveform accommodates sampled systems with digital or other nonlinear technologies.

A.4.2.9.10 Common mode rejection

There appears to be a wide variation in common mode rejection performance among present-day ECG devices. Testing done at both UBTL (Schoenberg, et al., 1977) and the Emergency Care Research Institute showed that the AHA's 1967 recommendation of 10,000:1 common mode rejection (Kossman, et al., 1967) may be vastly surpassed (70,000:1) or not complied with (400:1). Seven of the nine devices tested by UBTL passed the common mode rejection test defined in the 1967 AHA recommendations. The isolated patient circuit and the driven right leg concept have introduced problems in defining and measuring common mode rejection.

Basically, common mode rejection provides the ability to reject a signal that is applied to both sides of a differential amplifier. For high-impedance input to the amplifier, this generally requires very low currents and exactly matched impedances. With the high-input impedance requirements and protective circuitry at the front end, such a goal is hard to attain in practice. The common mode rejection ratio for isolated patient circuits, measured relative to power or chassis ground, is generally very high (exceeding 10,000:1 in most recorders measured by UBTL).

The circuit for common mode rejection testing described in this standard is based on IEC recommendations; a similar method is described in the 1975 AHA recommendations. The allowable output common mode noise was considered reasonable when the equivalent circuits are analyzed. A voltage divider is formed by the 100 pF capacitor and the right leg impedance of 51 kilohms, in parallel with a 47 nF capacitor at line frequency. The resulting common mode voltage would not be difficult to cope with if a grounded right leg or equivalent is assumed. But the risk current for any electrode lead must not exceed 20µA with 120 V at line frequency applied (as per 4.2.3); this implies an equivalent impedance to ground of at least 12 megohms. The 12 megohm impedance in series with the equivalent impedance of 200 pF (C2 and Ct in parallel) forms a voltage divider that results in a common mode voltage somewhat less than 10 Vrms when the patient cable and device are connected to the test circuit. Most currently available diagnostic ECG devices use either a driven right leg or other circuits, such as current-limited ground right leg, to reduce the common mode voltage seen by the amplifier input stage. The test method of this standard simulates the effective common mode voltage of the patient and allows various types of compensating circuits to operate effectively.

The noise requirement under skin-to-electrode impedance imbalance is based on the fact that a great amount of variation can be expected between any two electrodes attached to the same patient (Almasi and Schmitt, 1970). Given a finite impedance to ground for any electrode, the common mode current will generate a differential signal if an imbalance of skin-to-electrode impedance exists. Imbalance resistance of 50 kilohms can typically be encountered (see A.4.2.9.2 and Table A.1) and is consistent with the IEC recommendations.

Manufacturers and users of clinical ECG devices should recognize that what traditionally has been referred to as line frequency interference may, in fact, be the integrated effects of interference occurring at line frequency plus at twice line frequency. This is because, as time passes, more nonlinear loads are being placed on the power system (e.g., fluorescent lights and motor controls). These systems can radically alter the character of the displacement current in the hospital environment, generating apparent line frequency interference in instruments which may have close to infinite line frequency rejection when tested with a true sinusoidal source and the instrument's line frequency notch filter enabled. This is why CMR tests are now specified with any line frequency notch filter(s) set to be inactive. While inactivating any line frequency notch filters will not *per se* show the CMR results for common mode interference at harmonics of the power line frequency, it at least permits checking the common mode rejection of the instrument's differential amplifiers, etc., not the rejection of a notch filter.

There have been noteworthy discussions over the years about how a CMR fixture should be built and used. Annex C has been added to provide details on the construction, calibration, verification, and proper application of a suitable CMR test fixture.

A.4.2.9.11 Baseline control and stability

A baseline control, though desirable, is best left as an option for those who would like it or need it, assuming that signals with 5 mV peaks from baseline can be visualized without baseline control.

The reset function, however, must be incorporated because of the frequency of overload conditions present in everyday clinical ECG recording. How this reset function is achieved is left to the manufacturer; it can be automatic or manual, a separate switch or incorporated into the lead selector. The important aspect of this feature is that it should not take more than about three seconds after an overload for the ECG trace to be restored.

The AHA recommendations for electrocardiographs specify a maximum baseline drift, after a 5 minute warm-up period, of 50 µV in 45 minutes. For many applications, shorter warm-up periods and short periods of recording (1–2 min) may be involved. Hence, this standard specifies a maximum baseline drift (in µV/s) for the 1 min to 15 min

Single user license only. Copying, networking, and distribution prohibited.

iRhythm, Inc. / Welch Allyn, Inc.
Exhibit 1030
Page 72

period after warm-up; the overall maximum baseline drift requirement is based on that specified by the IEC. The 10 µV/s requirement essentially allows less than 50 µV or 0.5 mm drift in a typical 5 second recording period. Such a drift would not produce any misinterpretations of the ECG recording due to measurement errors. The total drift rate of 500 µV ensures that the baseline will remain fairly close to the center of the recording range over long periods of time without constant operator adjustment.

A.4.2.9.12 Pacemaker pulse display capability

The ability to display pacemaker pulses is crucial in many situations. The pacemaker pulse amplitude specification of ±2 mV to ±700 mV embraces the range usually seen, taking into consideration both unipolar and bipolar pacemakers. Although a surface lead configuration can be selected to almost cancel out the pacemaker pulse, it is unrealistic to expect a cardiac monitor to recognize a pacemaker pulse that has a very low amplitude. Similarly, although pacemaker pulse durations below 0.5 ms are frequently used, the detection of such short-duration pulses at low amplitudes is technologically difficult for limited bandwidth monitors.

A.4.2.9.13 Synchronizing pulse for cardioversion

The need for cardioversion or defibrillation must be considered for patients being monitored. To avoid the hazards associated with a shock delivered during the vulnerable period in the cardiac cycle, the time interval from the peak of the R wave to delivery of the shock should be no greater than 60 ms. The American National Standard, *Cardiac defibrillator devices* (applicable document 2.3), specifies the maximum time delay from the synchronization pulse input to defibrillator pulse output as 25 ms. Thus, the monitor must deliver a synchronization pulse output that is delayed no more than 35 ms from the R wave peak. Unfortunately, no common standards exist to allow precise definition of other pulse characteristics to properly drive a cardioverter or defibrillator. It is the responsibility of the manufacturer to fully disclose these features.

A.4.2.9.14 Electrosurgery interference suppression

The need to provide a usable ECG signal during actual electrosurgery can be important in many instances. While ESIS is not a requirement of this standard, it is useful to define a minimum performance standard for devices claiming such suppression. It is recognized that the power output capabilities (and clinically used settings of power), operating frequencies, crest factor during coag mode, electrode placements versus cautery site, isolation capacitance, etc., all have an effect on the level of interference that is observed. However, it is still believed that in monitors claiming ESIS, a minimum performance level should not allow the ECG trace to leave the screen or contain so much noise, baseline shifting, or signal compression that QRS picking of 1 mV signals cannot continue while subjected to a moderate electrocautery signal.

The defined test method checks only the monitor's rejection of the common mode RF generated by the cautery machine.

NOTE—It is pointless to test a monitor with a signal that contains an in-band differential component such as what results during sparking if the cautery site is basically between the ECG electrodes. After all, the monitor will surely amplify and display any in-band signal that appears differentially between its electrodes.

Because some monitors may simply show a flat line trace during cautery, even though the patient's ECG continues then, the committee believed it was important to verify that a monitor can continue to display an ECG and pick heartbeats satisfactorily during the actual interference.

NOTE—The simulated ECG signal source in Figure 13B is not affected by electrosurgery interference.

Finally, since a set of criteria have already been defined for the electrocautery unit used to test for protection against damage or memory loss from electrosurgery, that same type of unit is used to test for ESIS performance. During ESIS testing, the amplitude of electrosurgical unit signal applied to the monitor under test is substantially lower than in the damage protection test. A modification of the electrocautery test circuit used in IEC ECG standards provides taps for both levels of interference.

The 10 percent tap point for electrosurgery injection given was chosen based on the following measurements. Common mode cautery amplitudes with respect to earth ground were measured with a 3 pF, 1000X high voltage dc 75 MHz probe and a digitizing oscilloscope that provides wide bandwidth RMS calculations. Scope bandwidth was reduced to 20 MHz for these measurements. RMS calculations were done over six or more cycles of waveform. These voltages were then compared to the differential output voltage that the same electrocautery unit, operating at the same power setting, could produce across a 500 ohm non-inductive load resistor.

With floating output electrocautery units, there is a significant voltage present at the electrosurgery return electrode (and hence at all ECG electrodes) when the unit's RF output is on, even when its probe is not in contact with the patient. On an adult patient who is lying on a totally insulated operating table, amplitudes produced while connected to an electrically isolated but line-powered ECG monitor were observed to be about 3 % to 53 % (20 % average).

Single user license only. Copying, networking, and distribution prohibited.

iRhythm, Inc. / Welch Allyn, Inc.
Exhibit 1030
Page 73

Lying on a 1.5 inch thick mattress on a grounded surface gave about 3 % to 36 % (14.5 % average). These situations define a worst-case RF-on-but-non-sparking condition, and are affected mostly by the isolation capacitances of the patient and two instruments. For this reason, using a tapped load that is earth ground referenced as a test setup eliminates such variables. An unrealistic worst-case RF-on-sparking condition is for an electrosurgery site next to an actively used ECG electrode on a patient who is well (capacitively) coupled to an earth grounded operating table. A more realistic worst-case RF-on-sparking condition is an electrosurgical site in the middle of the chest while all electrodes are in their normal locations and the cautery return plate is on the buttocks or back of the thigh. This condition yielded a common mode average of 5 % to 10 % (8.5 % average) amplitude. The average indicated here was measured from the ECG front end's isolated-common to earth ground. Obviously, some of the electrodes received more than this. When the electrocautery site was moved to the lower abdomen with the return plate and ECG electrodes as before, a 5 % to 7 % (6.3 % average) amplitude was obtained. The tap point selected was chosen as a derated average of the numbers obtained from these experiments, and its derating is intended to handle the range of variables that will affect any clinical situation.

QRS picking must continue to occur without anomaly during the level of interference generated by these tests. A monitor's heart rate indication is a convenient, outwardly visible indication of QRS picking ability. The circuit of Figure 13B generates a pseudo-ECG signal whose rate is not affected by cautery interference. Deviations in the indicated rate are due to a lack of sufficient interference rejection, or to the fixture running at a rate whose average is nearly at a transition between two discrete integer values. Finally, the simulated QRS produced by the fixture is wide enough that it should be detectable even with the monitor's pacer detector being triggered.

Except in circumstances where the electrosurgical site is quite removed from the ECG electrode locations, some degree of interference may still occur. It is the intent of this test only to define a minimally acceptable level of reduction of that interference. RF common mode injection tests do not include the broad band differential interference effects generated by sparking on living tissue. Nonetheless, these test results have still served as a reasonable indicator of which designs will perform satisfactorily in the operating room when the surgery site is not close to the ECG electrodes.

A.4.2.10 Electromagnetic compatibility

With the proliferation of digital and computer-based instruments operating in close proximity in the hospital, there are instances where one instrument emits electromagnetic (EM) radiation that interferes with the performance of another instrument. For this reason, it is imperative to address the problem of electromagnetic compatibility (EMC) in detail so that compliance with EMC standards for both emission and immunity will minimize detrimental interference between instruments.

This standard addresses complementary issues: (a) emission, i.e., the intensity and characteristics of EM radiation emitted by the operating instrument; and (b) immunity, i.e., the ability of the instrument to perform satisfactorily while exposed to external EM radiation. This standard sets maximum levels on emission and defines the levels of external radiation the instrument shall tolerate and still perform satisfactorily.

The characterization of the external EM environment, the frequency ranges over which the test is done, the test methods themselves, and definitions of what constitutes compliance are based on the IEC 60601-1-2 standard (reference document 2.6), the EN61000-4-X series, and the CISPR 11 (reference document 2.5), which are generally accepted for EMC purposes. IEC 60601-1-2 is a collateral standard on EMC in medical devices, which defines test levels and compliance requirements. The United States is actively participating in creating the latest version of this international document. Section 36 of IEC 60601-1-2 contains pointers to specific EMC standards that describe the test setups, frequency ranges, and amplitudes for the remaining test specifics. By using IEC 60601-1-2 as the requirement for EC13, EC13's requirements will automatically track future changes in all of these standards. For reference, the European Medical Device Directive (Council Directive 93/42/EEC:1993) dictates a legal requirement for EMC compliance with harmonized standards where IEC 60601-1-2 serves that function.

IEC 60601-1-2 recognizes that measurement and control of EMC issues are much more difficult for patient-coupled instruments where the patient cables act as antennae for both emissions and reception of EM interference signals, with an antenna gain that depends on the layout of the cables. Therefore, the general standard makes allowance for this situation by providing limited exemptions from the immunity requirements, on the condition that the reduced immunity levels be measured and disclosed.

A.4.2.10.1 Electromagnetic emissions

CISPR 11 is the total defining test standard for RF emissions.

A.4.2.10.2 Electromagnetic immunity

There has been some degree of iteration in settling on the range of test frequencies to be used by the referenced standards. A compromise was reached whereby the lower frequencies of RF susceptibility are checked by

Single user license only. Copying, networking, and distribution prohibited.

iRhythm, Inc. / Welch Allyn, Inc.
Exhibit 1030
Page 74

conducting the RF into the instrument on its cables (arguably the most common coupling method in actual situations for these frequencies), while the higher frequency susceptibilities are tested by radiated RF.

IEC 60601-1-2 now defines the modulation frequency of RF interference to be at 2 Hz, calls out specifics of unacceptable performance, and deals with possible reductions of susceptibility performance if the outlined justifications and disclosures are followed.

Patient data or control settings being stored in the equipment are subject to possible loss or corruption during transients, surges, or dips in the line voltage that operates that equipment. It is desirable to prevent such data loss or corruption and control setting changes by the design of the equipment.

Single user license only. Copying, networking, and distribution prohibited.

iRhythm, Inc. / Welch Allyn, Inc.
Exhibit 1030
Page 75

Annex B
(informative)

Cited references and bibliography

ALMASI JJ, and SCHMITT OH. Systematic and random variations of ECG electrode system impedance. *Annals N.Y. Acad. Sci.* Vol. 170, 1970; p. 509.

AMERICAN NATIONAL STANDARDS INSTITUTE. *Voltage ratings for electric power systems and equipment*. ANSI C84.1a-1980. New York: ANSI, 1980. American National Standard.

ASSOCIATION FOR THE ADVANCEMENT OF MEDICAL INSTRUMENTATION. *Implantable pacemaker literature summaries*. Report to the Bureau of Medical Devices, U.S. Food and Drug Administration, Contract 74–83. Arlington (VA): AAMI, 1975.

ASSOCIATION FOR THE ADVANCEMENT OF MEDICAL INSTRUMENTATION. *Pre-gelled ECG disposable electrodes*. ANSI/AAMI EC12:1991. Arlington (VA): AAMI, 1991. American National Standard.

BAILEY JJ, et al. Recommendations for standardization and specifications in automated electrocardiography: Bandwidth and digital signal processing. *Circulation*, Vol. 81, no. 2, 1990; pp. 730–39.

BENSON, et al. Mechanisms of regular wide QRS tachycardia in infants and children. *Amer. Journal Cardiol*. Vol. 49, no. 5, 1982; p. 1778–87.

BERSON AS, et al. Filtering and sampling for electrocardiographic data processing. *Computers in Biomed. Res*. Vol. 10, 1977; p. 605.

BERSON AS, LAU FYK, WOJICK JM, and PIPBERGER HV. Distortions in infant electrocardiograms caused by inadequate high-frequency response. *Amer. Heart Journal* Vol. 93, 1977; p. 730.

BERSON AS, and PIPBERGER HV. Skin-electrode impedance problems in electrocardiography. *Amer. Heart Journal* Vol. 76, 1968; p. 519.

BERSON AS, and PIPBERGER HV. Slew rates for electrocardiographic signals. *IEEE Trans. Biomed. Engr*. Vol. 25, 1978; p. 299.

ECRI. *The Development of Environmental Test Methods for Non-implantable Medical Devices, Final Report*. Contract No. 223-77-5035. Plymouth Meeting (PA): ECRI, 1979.

ECRI. Evaluation: Bedside ECG monitors. *Health Devices*, Vol. 4, 1975; p. 251.

FRANK E. An accurate clinically practical system for spatial vectorcardiography. *Circulation*, Vol. 13, 1956; p. 737.

GARRISON RJ, and LEVY D. Personal communication, Framingham Heart Study.

HELPPI RR, et al. Suggested minimum performance requirements and methods of performance evaluation for computer ECG analysis program. *Canad. Med. Assn. Journal* Vol. 108, 1973; p. 1251.

INTERNATIONAL ELECTROTECHNICAL COMMISSION. Particular requirements for safety for electrocardiographic monitoring equipment. Geneva: IEC, 1987. IEC 62D(CO)17, 1987 Committee Draft.

INTERNATIONAL ELECTROTECHNICAL COMMISSION. *Performance requirements for single-channel and multi-channel electrocardiographs*. Geneva: IEC, 1978. IEC 62-D, June 1978 draft.

KERBER RE, et al. Transthoracic resistance in human defibrillation. *Circulation*, Vol. 63, no. 3, 1981; pp. 676–682.

KOSSMAN CE, et al. Recommendations for standardization of leads and specifications for instruments in electrocardiography and vectorcardiography. *Circulation*, Vol. 33, 1967; p. 533. American Heart Association Committee on Electrocardiography.

LINDSAY AE, and BUDKIN A. *The cardiac arrhythmias*. Chicago: Medical Publishers, 1970.

MIRVIS DM, et al. Instrumentation and practice standards for electrocardiographic monitoring in special care units. *Circulation*, Vol. 79, 1989; pp. 464–471. Task Force of the American Heart Association Council on Clinical Cardiology.

Single user license only. Copying, networking, and distribution prohibited.

iRhythm, Inc. / Welch Allyn, Inc.
Exhibit 1030
Page 76

PIPBERGER HV, et al. Recommendations for standardization of leads and of specifications for instruments in electrocardiography and vectorcardiography. *Circulation*, Vol. 52, no. 2, 1975; p. 11. American Heart Association Committee on Electrocardiography.

SCHAFFER H, and HAAS HG. Electrocardiography. In *Handbook of Physiology*. Washington, DC: American Physiology Society, 1962. Vol. 1, sec. 2: Circulation.

SCHMITT OH, and ALMASI JJ. Electrode impedance and voltage offset as they affect efficacy and accuracy of VCG and ECG measurement. In *Proceedings of the XIth International Vectorcardiography Symposium*. New York: North-Holland Publishing Co., 1970.

SCHOENBERG AA. *Final Report: Phase 1—A study of cardiac monitor safety and efficacy*. UBTL TR 173-008, FDA Contract No. 223-74-5253, Task Order 19. Salt Lake City: UBTL, 1977.

SCHOENBERG AA, et al. *Fourth Draft Standard for Electrocardiographic Devices*. UBTL TR 227-003, FDA Contract No. 223-74-5253, FDA MDS-021-0006. Salt Lake City: UBTL, January 1977.

SCHOENBERG AA, et al. *Final second draft standard for cardiac monitors, heart rate meters, and alarms*. UBTL TR 1606-010, FDA Contract No. 223-74-5253, FDA MDS-021-0006. Salt Lake City: UBTL, 1978.

SCHOENBERG AA, et al. *Final report: The development of test methods of disposable ECG electrodes*. UBTL TR 1605-005, FDA Contract No. 223-74-5253. Salt Lake City: UBTL, April, 1979.

SIMONSON E. *Differentiation between normal and abnormal in electrocardiography*. St. Louis: C.V. Mesby Co., 1961; p. 158.

SIMONSON E, BROZEK J, and KEYS A. Variability of the electrocardiogram in normal young men. *Amer. Heart Journal* Vol. 38, 1949; p. 407.

SPACH MS, et al. Skin electrode impedance and its effect on recording cardiac potentials. *Circulation*, Vol. 34, 1966; p. 694.

U.S. FOOD AND DRUG ADMINISTRATION. Classification of cardiovascular devices. *Federal Register*, 9 March 1979, Vol. 44, no. 48. *Code of Federal Regulations*, Title 21, Part 870.

VINCENT GM, et al. QRS-wave detector evaluation. *Amer. Heart Journal* Vol. 83, 1972; p. 475.

Single user license only. Copying, networking, and distribution prohibited.

Annex C
(informative)

CMR test fixture design and application notes

For use with 4.2.9.10, 5.2.9.3, 5.2.9.10, and Figure 10.

C.1 Introduction

Attention to these guidelines while building, calibrating, and using CMR (and noise test) fixtures will ensure consistent and accurate test results. These guidelines were developed after building several fixture designs, and are written at a level appropriate for technically qualified personnel.

C.2 Need for this annex

Many questions and vigorous discussions in and outside of committee meetings have arisen over the proper design, construction, and use of the test circuit prescribed in this standard for CMR and channel noise testing. It is the intent of this annex to resolve those questions and discussions, and, in so doing, foster greater testing consistency.

C.3 Construction notes

C.3.1 All components except C2 and Ct in Figure 10 must be completely enclosed by the inner shield, including the internal portions of all switches and the ±300 mV power source. The mounting hardware of all switches, the common connection of all ECG lead impedances, C2 (the 100 pf input capacitor), and Ct (the variable capacitor) all connect to this inner shield.

C.3.2 Wire the adjustment side of the variable capacitor to the outer shield (which must be earth grounded during the CMR and ECG noise tests). This makes calibration impervious to the loading effects of the adjustment tool. The variable capacitor does not need a maximum capacitance of 100 pf; depending on the fixture construction, a maximum of 30 pf to 60 pf will probably suffice.

NOTE—In constructions of minimum size, the minimum capacitance of the trimmer may be of greater interest.

C.3.3 The capacitance between inner and outer shields is approximately the sum of the capacitances of each face of the inner shield to its nearest parallel face of the outer shield.

NOTE—For each, C = 0.225 A/d. C is in pF, A = area of the inner shield face in square inches, d = separation in inches between those two faces of inner and outer shields.

This is only an approximation because the inner and outer “plates” of each capacitor do not have equal areas. The actual capacitance will be higher than this calculated amount. Any components mounted between the two shields (e.g., switch bushings or, for more elaborate systems, optoisolators, switching power supply transformer, etc.) also will add to this capacitance. Using a large sheet of thick plastic as a separator between the shields will increase the shield-to-shield capacitance dramatically. Avoid using devices such as rubber grommets for spacers between shields. Often, the rubber is conductive to a degree that is significant in this fixture. Verify that the dc resistance between the shields of a finished fixture exceeds 20 megohms (the higher the better). 20 megohms is not high enough *per se*, but virtually all likely leakages are far less than 20 megohms. Since many DMMs limit out at 20 megohms, this number is given for measurement convenience.

C.3.4 All switches for circuits enclosed by the inner shield must be well insulated to prevent the operator’s fingers from effectively shorting between the outer and inner shields. Use switches with insulated buttons or toggles (or better yet, use plastic pushrods), that provide as thick as possible a layer of insulation between the operator’s fingertips and conductive exposed portions of the switches. Mount all switches so that their bushings are below the surface of the outer shield. These steps minimize capacitance changes when the switches are touched. Check the calibration both with and without fingers touching the switches to verify that the effect is minimal. Additionally, all switches must be rated for “dry switching” (which may require gold-plated contacts) to ensure reliable, long-term operation with the extremely low currents used. If double pole switches are used where only single pole types are needed, parallel the switch halves for added reliability.

C.3.5 In the fixture, use 1 % metal film resistors in the 300 mV source; 1 % metal film or 2 % carbon film units are recommended in the 51 KΩ spots. Use 5 % ceramic or plastic film capacitors for the 0.047 µF units. Do not use 10 % capacitors simply because they are easier to obtain.

Single user license only. Copying, networking, and distribution prohibited.

iRhythm, Inc. / Welch Allyn, Inc.
Exhibit 1030
Page 78

C.3.6 The signal wires of the ECG test cable must be protected from capacitive coupling to the fixture's outer shield where those wires pass through the outer shield. Either the cable's own shield or the fixture's inner shield must surround these wires as they pass through the outer shield. If attention is not paid to this issue, CMR test results with one of the 51 KΩ resistors shorted will be noticeably worsened (a factor of 2X has been observed). Note that the cable's own coaxial shield must not connect to either the inner or outer fixture shield (a connection to the outer shield makes CMR performance drastically worse; a connection to the inner shield shorts out the CMR signal completely and invalidates the test).

Special construction is required if binding posts are used to connect the ECG cable to this fixture. Each binding post must be sleeved by a cylindrical metal shield connected to the inner fixture shield, and the binding posts and their shields must project at least 0.5 inches beyond the outer shield.

Alternatively, a connector system may be used to attach an ECG test cable to the fixture's internal circuits. That connector system must allow the cable to be unplugged during fixture calibration, yet retain the proper shielding when connected. The connector may be entirely within the inner shield, on the end of a short "stub" cable that protrudes several inches outside the outer shield, or mounted on the inner shield. For the latter, both the male and female connector portions must have conductive outer shells (e.g., shielded D-sub connectors), and have a reliable means for contact between those shells (e.g., a spring contact) when plugged together. The shell of the fixed connector and its contact that will make connection to the ECG cable's connector shell should be electrically connected to the inner fixture shield. Do not connect the ECG cable's shield to the outer shell of its (fixture end) connector. Make the clearance hole in the outer shield large enough to give about 0.25 inch annular clearance around the ECG cable's connector (to minimize capacitance). Locate the connector so that the operator's fingers cannot contact its shell during testing. If a test cable with lower wire-to-shield capacitance than the actual ECG cable is used, the CMR test will give worse results than the actual ECG cable would.

C.3.7 When internal batteries are used to produce the ±300 mV offset, the batteries' condition must be checked periodically. To avoid problems such as those in C.3.6, do not bring out separate test points for the batteries. Either measure the offset directly through the ECG cable connector or include a simple square wave CMOS oscillator circuit (approximately 5 Hz) that is powered by the fixture batteries, enabled only while checking batteries, and a small fraction of whose output is injected into the ECG signal. Battery condition may then be determined by observing the ECG trace's square wave amplitude.

C.3.8 Testing of ECG monitors with V (also referred as unipolar) lead capability may require offset circuits beyond that shown in Figure 10. If the fixture is designed so that its ECG electrode connections all pass through one connector and the fixture cannot literally switch its offset into the C electrode while testing the V lead selection, multiple electrodes must have offset applied to them in such a way as to include the full effects of ±300 mV input offset in their channels' outputs. The circuit of Figure 10 is possibly misleading in this respect.

As long as each differential amplifier of the monitor can receive full input offset and each electrode input is included in some way in CMR testing, it is not necessary to apply offset to every electrode. For example, if a monitor has no differential amplifier for Lead I, but develops Lead I algebraically from Leads II and III, it should not be necessary to do a CMR test on Lead I with 300 mV of offset. Figure C.3 offers a more complete design alternative.

C.3.9 The source impedance of the offset circuits must total less than 1 KΩ to keep the imbalance error between electrodes under 3 percent at line frequency. If desired, small matching impedances may be added in the non-offset electrodes.

NOTE—The latter may cause a respiration lead fault in impedance pneumography monitors due to high total impedance, but the CMR test does not apply to respiration.

C.3.10 A sine wave generator may be used as the source of the 20 Vrms, particularly where in-house testing at both 50 and 60 Hz is intended. Alternatively, use a line-powered step down isolation transformer, with a potentiometer (20 kilohm or so) across its output. (This output Z will be small compared to the 50–100 pF loads Z at line frequency, but still must be small compared to the input Z of what is used to measure the 20 V.) This gives a wave shape that is more representative of actual clinical noise conditions than a pure sine wave. The additional harmonics will more fully test the ECG's common mode rejection performance, since many software notch filters totally remove only the power line's fundamental frequency. If the line frequency transformer is to be included inside the overall test fixture, a separate compartment must be built for the transformer inside the outer shield, so that the inner shield is totally shielded from the transformer. During noise testing, disconnect both wires of the transformer primary. Finally, though power line voltage fluctuates, its percentage change is not large enough to significantly affect the CMR test results.

C.3.11 Two additional construction requirements apply to CMR fixtures used to test ECG monitors powered by ac mains, but that are floating with respect to earth ground. When they are mains powered, such monitors will almost certainly have a line frequency common mode signal, perhaps several volts or more, between their non-patient-connected power input circuits and earth ground. (The magnitude and phase of this common mode signal is

Single user license only. Copying, networking, and distribution prohibited.

iRhythm, Inc. / Welch Allyn, Inc.
Exhibit 1030
Page 79

dependent on the construction of the line frequency transformer in the monitor's power supply or in its line power adapter.) The first additional requirement is to construct the 20 Vrms voltage source with a reversing switch on the secondary side of its transformer so that the phase of its output can be switched to the position that gives the worst results during CMR tests. This corresponds to the condition where the common mode voltage of the monitor's line transformer or line power adapter is out of phase with respect to the CMR fixture's output, and their two amplitudes added together. This is representative of a clinical worst-case test. Try the switch in both positions any time a different fixture, monitor, or line power adapter is used. Note that using a sine wave generator as the 20 Vrms source does not lend itself to this feature unless it can be phase-locked to the mains that actually power the monitor.

C.3.12 The second additional construction requirement for CMR fixtures used to test non-earth referenced line-powered monitors is to add a normally open switch that can be used to short the ECG cable shield to the fixture's outer shield during ECG noise tests. Line-powered monitors that are not ground referenced will otherwise have a line frequency voltage across their isolation barriers during this test. Without such a switch, the noise test resembles a scaled-down CMR test applied backwards across the patient isolation barrier. Closing such a switch shields the fixture circuits from the effects of line frequency, yet does not tie to the "star connection" point of those circuits. This allows the ECG circuits and 51 kilohm resistors to make their full contributions to ECG channel noise as the test intends, but prevents power line noise pickup from affecting the results.

C.4 Calibration notes

C.4.1 Calibration must be done while the fixture is fully assembled; all batteries, shields, and internal cables are in place; and the external ECG cable is removed. The variable capacitor must be accessible under those conditions. (If calibration is done while fixture parts are missing, then when the parts are reassembled, the capacitance between the inner and outer shields will increase, thus reducing the fixture's output voltage.) If the adjustment screw of the variable capacitor is not connected to the outer shield, then calibration is best done with a tool that is virtually all non-conductive, having only a small piece of metal at its tip. A metal shaft screwdriver will cause errors unless an iterative process is used to achieve a calibrated condition while the tool is removed.

C.4.2 The fixture's output impedance with respect to earth ground is nearly 16 megohms at line frequency, and much more than this at dc. You cannot use a meter or scope directly to calibrate this fixture. Trying to do so, then disconnecting the device after calibration, will yield an excessive fixture voltage during CMR testing. "Calibrating" the fixture with a scope or meter, then leaving the scope or meter connected during a CMR test, gives the fixture too low an output impedance. Both practices will give false CMR test results.

C.4.3 The calibration method traditionally described in EC13 uses a capacitance meter (set for its highest operating frequency) to first measure and record the capacitance from the power input point (of the 100 pF input cap itself) to the inner shield (or alternatively, to any of the ECG output connections; positions of impedance switches do not matter). Then, while measuring between the latter point and the outer shield, adjust the variable capacitor until the second reading matches the first. To be accurate at these capacitances, the capacitance meter probably needs to be a four-wire instrument. However, in actual practice, some capacitance meters give such erratic readings while using the above test method that one of the following methods may be necessary.

C.4.4 Through the use of a center-tapped transformer, it is possible to use a voltage nulling technique to calibrate a CMR fixture. An isolation transformer (i.e., not an autotransformer) driven so that its output provides an output of roughly 18 to 30 Vrms is satisfactory, so long as its "center" tap is verified to truly be centered. The transformer's primary may be driven by mains or by a sine wave generator (through a suitable series capacitor) at mains frequency as desired. Connect one side of the center tapped secondary to the 20 Vrms input of the CMR fixture, the center tap itself to earth ground, and the other side of the secondary winding to the CMR fixture's outer shield. Note that because this calibration method uses a nulling technique, the actual voltage applied need not be precise. Use an ac voltmeter with an input impedance of 10 megohms or more, or use an oscilloscope with a 10X probe. Measure between earth ground (at the transformer's center tap) and one of the fixture's ECG output terminals (e.g., RA). Adjust the fixture's calibration cap to achieve a minimum reading on the meter. When a null is achieved, the meter does not load the fixture. Because the outer shield of the fixture is driven by a low impedance source, its capacitance to earth will not affect the adjustment. Finally, because the fixture output voltage when calibrated is zero with respect to earth, the capacitance to earth of the meter leads is not an issue, either. Once calibrated, the transformer may be disconnected and the fixture may be powered by the 20 Vrms source of choice.

It is necessary when using an ac voltmeter to use only a type that buffers its input before doing any rectification. Buffering keeps the meter's input impedance consistent for both halves of a sine wave input. Most digital voltmeters do this, but old style voltmeters do not. It is also important to keep the meter leads and the meter itself well away from the fixture's outer shield (which has half the supply voltage on it) to avoid capacitive coupling errors. Make no connection between the fixture's outer shield and the meter, the scope, or their cables.

C.4.5 An additional calibration method is to use a suitable buffer amplifier and measure the fixture's output voltage directly. For this technique to work, the buffer amplifier circuit must have as small an input capacitance as possible, and almost zero input current. This requires using a FET-input op amp as a unity gain, non-inverting buffer; locating

Single user license only. Copying, networking, and distribution prohibited.

iRhythm, Inc. / Welch Allyn, Inc.
Exhibit 1030
Page 80

the op amp at the “probe” end of the measurement cable; literally soldering the “probe tip” directly to the IC’s input pin; and powering the buffer from suitable supply voltages. Keep the connection length from the op amp’s input pin to the fixture output less than 0.75 inch. Such construction provides a buffer input capacitance of approximately 6 pf to 10 pf. Using a resistor (22 kilohms or so) as a probe tip gives some degree of ESD protection.

The buffer op amp must be able to (1) provide an output swing of approximately 30 V p-v under very light loading conditions (namely, the loading of the ac rms voltmeter) at room temperature, and (2) withstand power supply voltages whose differential equals 30 V (a little more than 10 Vrms) plus the “overhead” voltage (both input and output) of that op amp. The op amp does not need high bandwidth, high slew rate, low offset, low noise, good common mode rejection, or good supply rejection, but must be stable at unity gain, have FET inputs, have input and output voltage ranges that extend to within several volts of each supply rail, and have a sufficiently high maximum supply voltage rating. One combination that works is a TL062 (dual) op amp powered by ±17 V supplies. (Tight tolerance is needed on these supplies, since the TL062’s absolute maximum rating is ±18 V.) It is convenient to use the dual and actually build two buffers. The second one will help determine the approximate loading effect of the first. When its need is past, connect the input of the second buffer to the output of the first buffer. The main buffer should use a 22 megohm resistor between its input and output (like R5 in Figures C.1 and C.2) to keep its dc operating point established.

Alternatives to using well-regulated ±17 volt supplies for the buffer are possible if the buffer op amp’s supply circuits are derived from the 20 Vrms source, as in Figures C.1. and C.2. These alternatives work without tight tolerance voltage regulators because the buffer’s supplies need only be great enough to keep the instantaneous input voltage within the buffer’s common mode input range. Note that the buffer input can fall anywhere between zero volts—in case the 10 Vrms output is shorted to ground—and the instantaneous voltage of the 10 Vrms. If the buffer’s supplies are derived from the 20 Vrms source, they are guaranteed to be synchronized, and can allow the buffer’s total supply voltage to be reduced. In the following circuit, the total buffer supply voltage never exceeds about 29 V, and 10 percent zener tolerances are adequate. (Use only zeners whose voltage ratings apply at test currents of 5 mA or less. Zener power ratings of 300 mW are more than adequate.) C3, mounted at the IC, provides adequate supply bypassing, yet is small enough to prevent holding supply peak voltages. Do not increase its value. The values of C1 and C2 are picked based on the supply current of a TL062 to keep the minimum supply voltage above ±9.4 V during the time portions when the input sine wave is lower than this. All parts outlined by the bold line in these figures must be physically at the probe tip to give proper operation. R5 keeps the otherwise ac-coupled input within the buffer’s output swing range to prevent clipping and amplitude reduction. Because the total voltage across R5 is equal to the op amp’s input offset voltage, R5’s loading effect is extremely small. Any dc content in the buffer’s output is removed by an ac voltmeter. These circuits have been built and verified.

Single user license only. Copying, networking, and distribution prohibited.

iRhythm, Inc. / Welch Allyn, Inc.
Exhibit 1030
Page 81

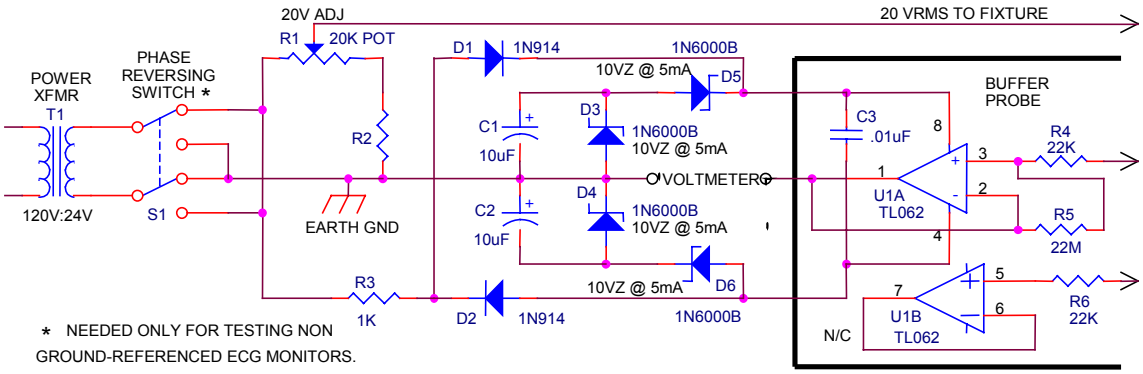

Figure C.1—CMR test: Line-powered supply and buffer

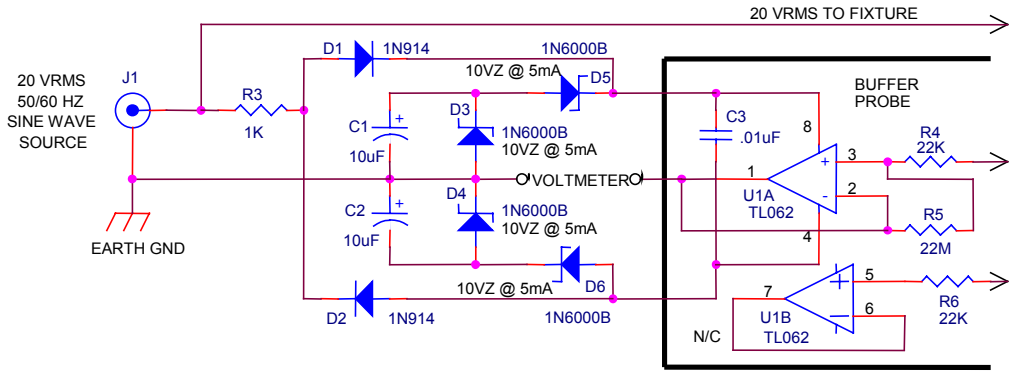

Figure C.2—CMR test: Generator-powered buffer

© 2002 Association for the Advancement of Medical Instrumentation ■ ANSI/AAMI EC13:2002

Single user license only. Copying, networking, and distribution prohibited.

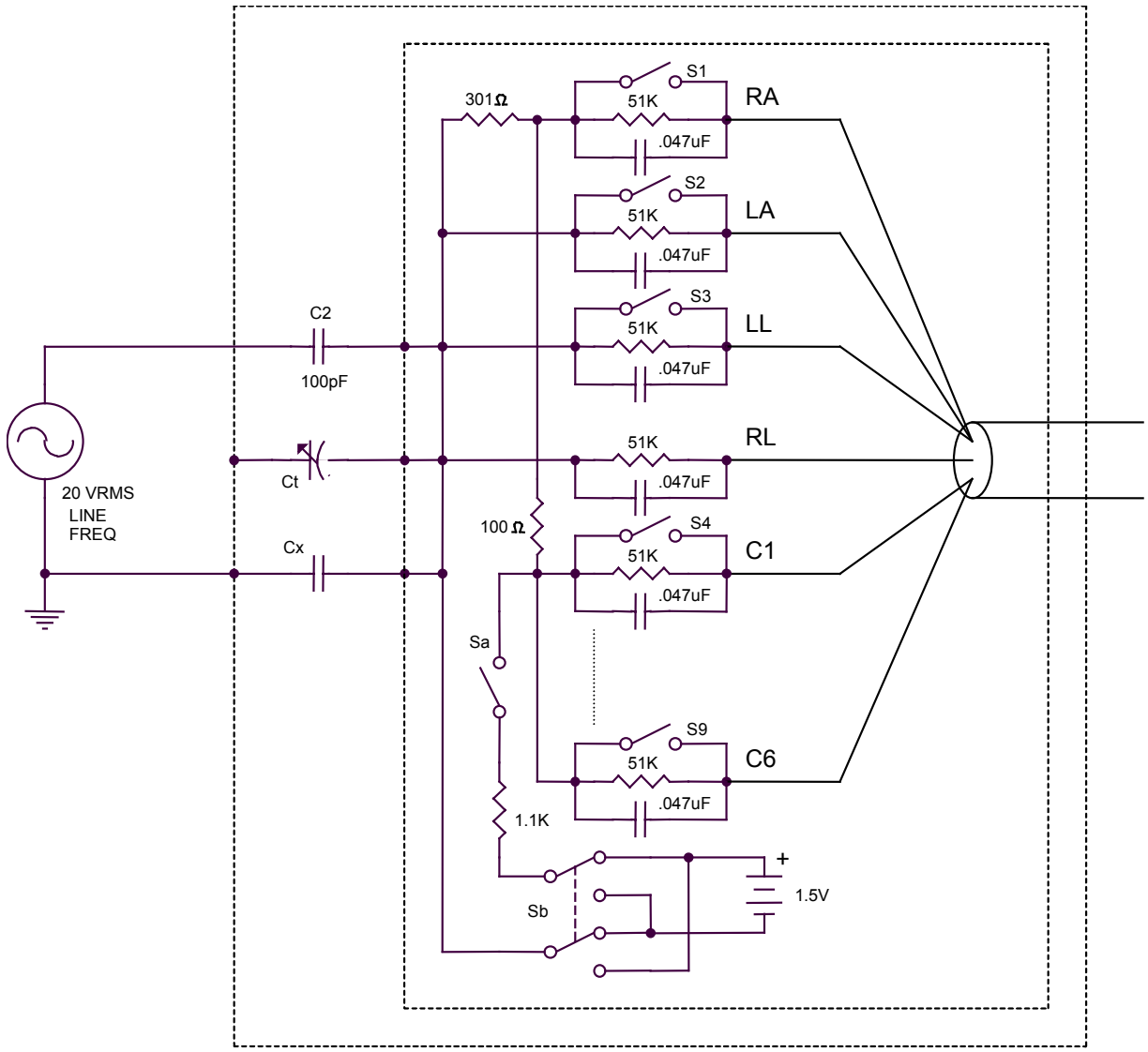

Figure C.3—Expanded offset capability, CMR fixture

To do calibration using a buffer, start with the buffer's power inputs connected but its signal input not connected. Then calibrate the 20 Vrms source using an ac volt meter alone (i.e., do not use the buffer). Next, connect the 20 V source to the CMR fixture, and the main buffer probe to the output ("10 Vrms") of the fixture. (For the fixture output, use any ECG output connection while the external ECG cable is detached.) Connect the meter to the output of the main buffer. If the main buffer is intended to remain permanently connected, simply adjust the fixture's variable capacitor for 10 Vrms output and leave it there.

If the main buffer is to be removed after calibration, two compensations are necessary. One compensation is for the capacitive loading of the main buffer. With only the main buffer connected, adjust to achieve approximately 9.5 Vrms output, then add the second buffer's probe tip to the same point as the main buffer's probe tip, and note by what amount the meter reading drops. Ten volts minus this delta is what the calibration should then be changed to while only the main buffer is connected. (This lets the fixture output return to 10 V when the main buffer is removed.) The second compensation is for changes in loading of the 20 V source. If the impedance of the 20 V source is greater

Single user license only. Copying, networking, and distribution prohibited.

iRhythm, Inc. / Welch Allyn, Inc.
Exhibit 1030
Page 83

than 50 ohms or so, the discontinuous nature of the buffer's supply current will cause distortion of the 20 Vrms waveform (see C.5.5). Such distortion actually slightly improves the suitability of the test waveform, and the same calibration techniques apply, but when the buffer's power loading is removed, the magnitude of the 20 V source will rise a little. Only the 20 V calibration should be readjusted as necessary after the buffer is removed. The fixture's variable capacitor calibration is not affected.

C.5 Application notes

C.5.1 Test the monitor's (hardware) CMR with the notch filter off. This verifies good CMR at frequencies other than those that notch filters remove (e.g., higher harmonics of the line frequency, cautery noise). This may require a special, "factory only" test mode that allows the notch filter to be turned off.

C.5.2 Perform the ECG noise test with the monitor's notch filter on. Common mode tests already deal with injected line frequency. Use the notch filter so that only circuit-generated noise will be visible.

C.5.3 Perform all CMR and ECG noise tests at the highest ECG frequency response the monitor provides. (This might require setting some monitors for neonatal mode.) Low-frequency response down to 0.05 Hz is not required for this test; 0.5 Hz will give the same results.

C.5.4 Do not allow unshielded ECG lead wires (if used) to touch the operator, the fixture shield, or other grounded objects during CMR tests.

C.5.5 A sine wave generator may be used as the 20 Vrms power source for the CMR fixture. This makes it easy to test at both 50 and 60 Hz. However, many sine wave generators are not capable of directly providing a 20 Vrms (57 V p-v) output. Use a small line frequency transformer to boost the generator's output sufficiently. Note that a small dc offset in generator output can partially saturate the transformer core, and it may be necessary to add a series capacitor between the generator output and transformer primary. A pair of 100 µF or larger electrolytic caps connected back to back typically will suffice. Note that the vector sum of the generator's output impedance and the impedance of the series capacitors should be multiplied by the square of the transformer turns ratio. If this transformer output is used to drive a circuit such as Figure C.2, the discontinuous nature of the latter's load current will cause distortion of the 20 Vrms waveform. However, such distortion actually improves the suitability of the test waveform, and the same calibration techniques apply. Still, it is recommended that a generator with 50 ohm output impedance be used.

Note that line-powered equipment destined to go into 50 Hz countries should be truly tested for proper power operation (including leakage current) with a 50 Hz line source, and at 240 V instead of at 120 V. A 50 Hz CMR test with a line-derived 20 Vrms source could be used during that testing to verify proper 50 Hz power supply operation. Those manufacturers intent on doing both a 60 Hz and a 50 Hz test with a line-derived 20 V source should use a dual primary transformer in the fixture, so that both line voltages may be utilized. All other test circuit functions will operate identically.

Alternatively, the CMR performance test results likely are not much different between 60 Hz and 50 Hz anyway, as long as no notch filter is enabled. EC13's upper frequency specification of 40 Hz minimum will, of course, give more rolloff to 60 Hz signals than to 50 Hz signals. However, by way of partial compensation, as the test frequency for common mode rejection goes down, the CMR gets better (inherently giving a lower test output signal) while the attenuation of the ECG channel's low pass filter decreases (giving a potential rise in test output signal). By assuming that the CMR test's output voltage in the high bandwidth, front-end portion of an ECG system is directly proportional to frequency, and also knowing the characteristics of the monitor's low pass filter, a fairly accurate extrapolation from the results at 60 Hz can be made. Practically speaking, if a design has test results so close to the test limit specifications that the manufacturer really has a concern over testing at 50 Hz versus 60 Hz, the design probably should be revised to get better test margins anyway.

Single user license only. Copying, networking, and distribution prohibited.

iRhythm, Inc. / Welch Allyn, Inc.
Exhibit 1030
Page 84

Annex D
(informative)

Pacer pulse shaper test circuit and notes

For use with 5.1.4 and optionally with 5.2.9.12.

D.1 Introduction

This annex provides a test circuit that, when driven by an external pulse generator, can produce trapezoidal pacer pulses with adjustable rise/fall times and adjustable pulse amplitudes. The pulses may selectively include an overshoot whose amplitude and decay time constant are each adjustable. Overshoot test methods A and B are both supported by this test circuit. Both polarity choices are provided. A summing input also is provided for adding (externally generated) high-level ECG signals. The circuit includes an aid to eliminate the inevitable oscilloscope overdrive recovery errors and thus facilitates accurate viewing of overshoot in the presence of high amplitude main pacer pulses.

This guideline was developed after building several fixture designs, and is written at a level appropriate for technically qualified personnel.

D.2 Need for this annex

This annex is optional, but informative. Depending on the equipment a manufacturer has available, it may be difficult to accurately generate the pacer pulse and overshoot test waveforms required by 5.1.4. As one alternative, off-the-shelf arbitrary waveform generators may be used to generate complete pacer test waveforms. If this is done, however, most likely two such devices would be required to generate both the trapezoidal main pulse and the overshoot with the resolution required by each. Such a combination can certainly produce perfectly acceptable signals. Figure D.1 offers an alternative solution, and the discussion about how to attenuate signals may still be useful even for other solutions.

D.3 Test circuit description

In Figure D.1's test circuit, an operational transconductance amplifier with provision for externally setting its output current is used to turn square input pulses into trapezoidal pulses whose rise/fall times are adjusted symmetrically by R14. The pulse width and pulse rate at output J2 follow the pulse width and pulse rate at J1.

An adjustable R-C network and buffer U2B generate the pacer tail (overshoot) waveform. Switch S1 selects one of five preset time constants, and R22 provides the ability to compensate for component tolerances by fine tuning the actual decay time constant to match intended values. Set R22 so that at the end of the intended decay time (e.g., 50 ms), the voltage of the tail signal is down to 36.8 % of its beginning value. Note that there is a slight intentional dc content in this tail signal. The adjustment is to be set relative to the p-v swing, not set relative to zero volts. Switch S4 selects either the type A pacer tail, which is simply 0 mV to 2 mV R.T.O. as set by R31 independent of the main pulse's width, amplitude, or tail time constant; or the type B pacer tail, where the tail amplitude has a fixed relationship to the tail time constant, the pulse width, and the pulse amplitude as set by R31 and R38. Precision rectifier U3A is active for type A tails only.

For ease in adjustment, both fine and coarse pulse amplitude controls are provided. R15 and R4 respectively adjust coarse and fine main pulse amplitude alone, and they never have any effect on overshoot. For type A tails, R31 adjusts overshoot amplitude alone so that the percentage of tail can be set as desired and R38 has no effect. For type B tails, R38 and R31 respectively provide coarse and fine amplitude adjustment of the sum of main pulse and type B tail, where the tail is automatically determined by the expression in 4.1.4.2 type B. For tail type B, leave R15 and R4 at zero to automatically get the proper output tail.

Divider resistors in the critical path after J2 are specified as having tolerances of 0.1 % so that the delivered signal can be accurately scaled from that seen at J2. Pulse polarity is selected by S2. The pacer tail is always the polar opposite of the pacer pulse.

U3's positive supply is defined as being +5 V, instead of +12 V as used by all of the other op amps. Functionally, U3 can tolerate +12 V, but the transient that occurs when the tail is finished will likely be lower if U3's output doesn't have to swing down from +10 V or so to turn on D3.

Single user license only. Copying, networking, and distribution prohibited.

iRhythm, Inc. / Welch Allyn, Inc.
Exhibit 1030
Page 85

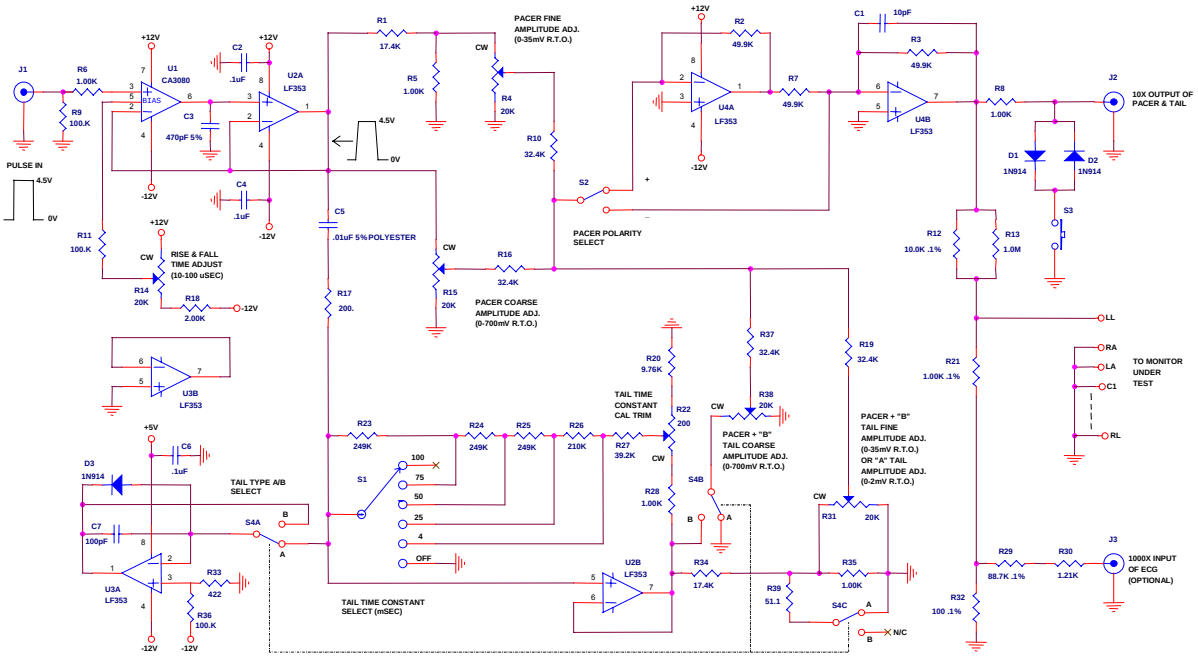

Figure D.1—Pacer pulse shaper circuit

D.4 Construction notes

The ground paths of R32, S3, J2, J3, S4C; the connections to monitor under test; and the grounded portion of all adjustments and their shunting resistors should be kept as low impedance as possible.

Use a component arrangement that minimizes the possibility of coupling of high amplitude signals at J1, U1 pin 6, U2 pins 1 and 7, and U3 pin 1 into U4 and output circuits. Such coupling can manifest itself in the J2 output as spikes from square pulse edges and/or as a pair of square pulses added to the trapezoidal output. The slope of the rising and falling edges capacitively couples into nearby components and connections. The faster the rise/fall time, the greater the amplitude of the coupled signal. The rising and falling edges produce opposite polarity artifact pulses. Such coupling even occurs by way of the parasitic capacitance that is in parallel with resistors (particularly R1, R10, R19, and R34 in this design). It is for this reason that both pacer fine amplitude adjustment potentiometers attenuate the signal before feeding it to R4 and R31, rather than having R4 connect directly to U2 pin 1 and making R10 much higher in value; likewise for the R31 tail adjustment.

Use a polyester (or polycarbonate) cap for C5 for low leakage and low dielectric absorption effects. The arrangement of U2B, so that only one-tenth of C5's voltage appears across the time constant-producing resistors, allows reasonable values for those resistors and C5, yet still gives sufficiently long time constants. Be very careful to prevent leakage currents from corrupting the U2 pin 5 node.

While not necessary, adding a shield around this test circuit will reduce noise artifact from ambient sources. Connect such a shield to circuit ground.

D.5 Application notes

For proper operation, the square input pulses at J1 must have their baseline at zero volts and their peak amplitude fixed at +4.5 V. (The absolute maximum differential input voltage specification for the CA3080 amplifier is 5 V, and the 4.5 V input level is sufficiently below this.)

A signal injection point (J3) is provided for summing in (external) high level machine-generated ECG signals for those tests that also require ECG. (Note that some manufacturers of ECG simulators provide AAMI ECG test

Single user license only. Copying, networking, and distribution prohibited.

iRhythm, Inc. / Welch Allyn, Inc.
Exhibit 1030
Page 86

waveforms, available at a high-level analog output, and some may provide sufficient synchronization features to allow locking the timing of that simulator to the pulse generator used with this pacer pulse shaper test circuit. Otherwise, the user must generate his own ECG test signals.) In practice, the controls of the external pulse generator and this fixture are adjusted until the desired pacer signal shape is obtained at the high-level pacer pulse output jack (J2). For ease in viewing the test signals on most oscilloscopes, the latter jack gives signals 10X those actually presented to the monitor under test. For the same reason, ECG signals may be observed on an oscilloscope at levels 1000X those delivered to the monitor under test. It is important to use dc coupling on the scope so that pacer tails in particular are accurately displayed.

When setting amplitudes of test signals, always use p-v measurements, not peak to zero volt measurements.

In practice, most oscilloscopes do not deal well with high amplitude pacer pulses while their vertical gain is set to maximum to see a pacer tail in sufficient detail. Due to their relatively slow overdrive recovery, most scopes with their gain set to maximum will “show” a tail following a large pacer pulse even when there is no real overshoot. To prevent this measurement artifact from being mistaken for or distorting a real tail, switch S3 permits clipping the top part off a large pacer pulse before feeding it to the scope, so that the tail can be seen with good fidelity. The clipping in this manner does not affect the pacer pulse delivered to the monitor under test.

If testing is to be done over an extended time period, be aware that the output rise and fall times will change slightly with changes in the temperature of U1 and changes in the absolute voltages of the ±12 V supplies. If this is an issue, U1 may be replaced with a more complicated but more precise pair of voltage-controlled current sources whose outputs are steered into C3 by a suitable op amp circuit. If the external pulse generator’s output is sufficiently stable, circuit output will have only minimal drift with changes in time and temperature.

Single user license only. Copying, networking, and distribution prohibited.

iRhythm, Inc. / Welch Allyn, Inc.
Exhibit 1030
Page 87