American National Standard

ANSI/AAMI EC11:1991/(R)2001/(R)2007

Diagnostic electrocardiographic devices

AAMI Association for the Advancement of Medical Instrumentation

Single user license only. Copying, networking, and distribution prohibited.

iRhythm, Inc. / Welch Allyn, Inc.
Exhibit 1054
Page 1

Association for the Advancement of Medical Instrumentation
1110 N. Glebe Rd., Suite 220
Arlington, VA 22201-4795

© 2000 by the Association for the Advancement of Medical Instrumentation

All Rights Reserved

Copyright and Permissions

Publication, reproduction, photocopying, storage, or transmission, electronically or otherwise, of all or any part of these documents without the prior written permission of the Association for the Advancement of Medical Instrumentation or the copyright holder (if not AAMI) is prohibited by law. It is illegal under federal law (17 U.S.C. § 101, *et seq*.) to make copies of all or any part of these documents (whether internally or externally) without the prior written permission of the copyright holder. Violators risk legal action, including civil and criminal penalties, and damages of $100,000 per offense. For permission regarding the use of all or any part of these documents, contact AAMI, 1110 N. Glebe Road, Suite 220, Arlington, VA 22201-4795. Phone: (703) 525-4890; Fax: (703) 525-1067.

Violators of this copyright policy should be reported to AAMI's legal counsel:

McKenna & Cuneo, L.L.P.
1900 K Street, N.W.
Washington, DC 20006
Attn: Jacqueline A. Henson, Esq.
Phone: (202) 496-7500

Single user license only. Copying, networking, and distribution prohibited.

Diagnostic electrocardiographic devices

ANSI/AAMI EC11:1991/(R)2001/(R)2007
(Revision of ANSI/AAMI EC11:1982 and
ANSI/AAMI EC11a:1984)

American National Standard
Diagnostic electrocardiographic devices

Developed by
Association for the Advancement of Medical Instrumentation

Approved 24 October 1991; reaffirmed 4 May 2001 and 24 August 2007 by
American National Standards Institute

Abstract:

This standard establishes minimum safety and performance requirements for electrocardiographic (ECG) systems with direct writing devices which are intended for use in ECG contour analysis for diagnostic purposes.

Committee representation

Association for the Advancement of Medical Instrumentation

This standard was developed by the Diagnostic Electrocardiograph Subcommittee under the auspices of the Electrocardiograph Committee. Committee approval of the standard does not necessarily imply that all committee and subcommittee members voted for its approval.

The AAMI Electrocardiograph Committee has the following members:

Cochairpersons: Stanley A. Briller, M.D.
David Mortara, Ph.D.

Members: James Bailey, M.D., National Institutes of Health
Alan S. Berson, Ph.D., National Heart, Lung and Blood Institute
Stanley A. Briller, M.D., Allegheny General Hospital, Pittsburgh, PA
Francis Charbonnier, Ph.D., Hewlett-Packard Company
David L. Daly, Center for Devices and Radiological Health, FDA
Arthur R. Eddy, Jr., Medtronic, Inc
David Mortara, Ph.D., Mortara Instruments
*Jim Rooks, Medical Data Electronics

Alternates: Robert Cangelosi, Center for Devices and Radiological Health, FDA
Peter Galen, Hewlett-Packard Company
Roy D. Wallen, Hewlett-Packard Company

The committee's Diagnostic Electrocardiograph Subcommittee has the following members:

Cochairpersons: Alan S. Berson, Ph.D.

© *2000 Association for the Advancement of Medical Instrumentation*

Single user license only. Copying, networking, and distribution prohibited.

Peter Galen

Members: William O. Adams, Physio-Control Corp.
Manolito Adan, SpaceLabs Medical, Inc.
Alan S. Berson, Ph.D., National Heart, Lung and Blood Institute
Stanley A. Briller, M.D., Allegheny General Hospital, Pittsburgh, PA
Stephen Daleo, PPG Biomedical Systems
David L. Daly, Center for Devices and Radiological Health, FDA
James Dobbins, University of Kansas Medical Center, Kansas City, KS
Melvin N. Fink, Servicemaster
Peter Galen, Hewlett-Packard Company
David Geselowitz, Ph.D., Pennsylvania State University
Pradeep M. Gupte, Westchester County Medical Center, Valhalla, NY
David Hernke, Marquette Electronics Inc.
Haim Klement, Datascope Corp.
Jeffrey P. Milsap, CCE, PE, Ohmeda Anesthesia Systems
Kay Rutishauser, RN, American Association of Critical Care Nurses
William J. Smirles, R2 Medical Systems
John G. Webster, Ph.D., University of Wisconsin

Alternates: David Brown, Jr., SpaceLabs Medical, Inc.
Robert Cangelosi, Center for Devices and Radiological Health, FDA
Francis Charbonnier, Ph.D., Hewlett-Packard Company
Martin J. Kutik, PPG Biomedical Systems (PPD Consulting)
Ian Rowlandson, Marquette Electronics Inc.

NOTE—Participation by federal agency representatives in the development of this standard does not constitute endorsement by the federal government or any of its agencies.

Foreword

This is the second edition of the American National Standard, *Diagnostic electrocardiographic devices*. The standard, which was developed by the AAMI ECG Committee and its Diagnostic Electrocardiograph Subcommittee and first approved in 1983, is based on the fourth draft of a standard for electrocardiographic (ECG) devices developed by the UBTL Division of the University of Utah Research Institute under the sponsorship of the then Bureau of Medical Devices, U.S. Food and Drug Administration.

The objective of this standard is to provide minimum labeling, performance, and safety requirements that will help ensure a reasonable level of clinical efficacy and patient safety in the use of diagnostic ECG devices.

Substantive changes from the original standard appear in this revision. In 1990, the American Heart Association published a new report, updating their recommendations of 1975. The subcommittee carefully considered these recommendations in developing this revision of the AAMI standard. The changes in this revision primarily affect frequency response requirements, direct currents in patient electrode connections, system noise, and defibrillator overload protection.

This standard, like any other, must be reviewed and updated periodically to assimilate progressive technological developments. In addition, as other standards relevant to diagnostic ECG devices are promulgated, they may be incorporated by reference in order to provide additional assurance of safety and efficacy with respect to such characteristics as electromagnetic interference protection and performance of the device under adverse environmental conditions.

This standard reflects the conscientious efforts of concerned health care professionals, device manufacturers,

© *2000 Association for the Advancement of Medical Instrumentation*

Single user license only. Copying, networking, and distribution prohibited.

and government representatives to develop a standard for those performance levels that could be reasonably achieved at this time.

Recommendations for improving this standard are invited. Comments and suggested revisions should be sent to: AAMI, 3330 Washington Boulevard, Suite 400, Arlington, VA 22201-4598.

NOTE—This foreword is not a part of the American National Standard, *Diagnostic electrocardiographic devices* (ANSI/AAMI EC11-1991).

Diagnostic electrocardiographic devices

1 Scope

This standard establishes minimum safety and performance requirements for electrocardiographic (ECG) systems with direct writing devices which are intended for use, under the operating conditions specified in this standard, in the analysis of rhythm and of detailed morphology of complex cardiac complexes. Subject to this standard are all parts of the electrocardiographic system necessary to obtain the signal from the surface of the patient's body, to amplify this signal, and to display it in a form suitable for diagnosing the heart's electrical activity. This standard defines requirements for the electrocardiographic recording system, from the input electrodes[1)] to the output display.

NOTE—The safety and performance criteria defined in this standard are intended principally for use in design qualification or evaluation by the manufacturer.

The referee test methods of section 4 are intended to provide means by which conformance with the standard can be established unambiguously. These tests are not intended for use in verifying the performance of individual devices, either for purposes of quality assurance inspections by the manufacturer or for purposes of routine inhospital inspections. Also, referee tests, by definition, allow for the use of alternative methods for design qualification, provided that the equivalence of the methods can be established in terms of comparability of test results with those of the referee methods.

1.1 Inclusions

Included within the scope of this standard are the following devices:

a) direct-writing electrocardiographs;

b) electrocardiographs used in other medical devices (e.g., patient monitors, defibrillators, stress testing devices), when such devices are intended for use in obtaining diagnostic ECG signatures;

c) electrocardiographs having a display that is remote from the patient (via cable, telephone, telemetry, or storage media), when such devices are intended for use in obtaining ECG signatures. These devices are subject to the functional performance requirements at the system output-input levels[2)].

1.2 Exclusions

Not included within the scope of this standard are:

a) devices that collect ECG data from locations other than the external surface of the body;

b) devices for interpretation and pattern recognition (e.g., QRS detectors,alarm circuits, rate meters, diagnostic algorithms);

c) fetal ECG monitors;

d) ambulatory monitoring electrocardiographic devices, including ECG recorders and associated scanning and read-out devices;

e) diagnostic electrocardiographic devices utilizing nonpermanent displays;

© *2000 Association for the Advancement of Medical Instrumentation*

Single user license only. Copying, networking, and distribution prohibited.

f) vectorcardiographs, that is, the display of loops;

g) electrocardiographic devices intended for use under extreme or uncontrolled environmental conditions outside of a hospital environment or physician's office;

h) cardiac monitors, with or without heart rate meters and alarms, that are intended primarily for detecting cardiac rhythm. (These devices are covered by the ANSI/AAMI standard *Cardiac monitors, heart rate meters and alarms.)*

NOTE—Devices that provide selection between diagnostic and monitoring functions must meet the requirements of the appropriate standard—the standard for diagnostic electrocardiographic devices or the standard for cardiac monitors, heart rate meters and alarms—when selected for that function.

2 Normative references

2.1 Applicable documents

The following documents are applicable to the extent specified herein.

2.1.1 ASSOCIATION FOR THE ADVANCEMENT OF MEDICAL INSTRUMENTATION. *Safe current limits for electromedical apparatus.* ANSI/AAMI ES1-1985. Arlington (Vir.): AAMI, 1985. American National Standard. ISBN 0-910275-50-5.

2.1.2 ASSOCIATION FOR THE ADVANCEMENT OF MEDICAL INSTRUMENTATION. *Cardiac defibrillator devices*. ANSI/AAMI DF2-1989. Arlington (Vir.): AAMI, 1989. American National Standard. ISBN 0-910275-91-2.

2.2 Reference standards

Reference may be made to the following standards for safety and performance criteria established for other electrocardiographic devices and for components of electrocardiographic recording systems.

2.2.1 ASSOCIATION FOR THE ADVANCEMENT OF MEDICAL INSTRUMENTATION. *Cardiac monitors, heart rate meters and alarms.* ANSI/AAMI EC13-1983. Arlington (Vir.): AAMI, 1983. American National Standard. ISBN 0-910275-42-4.

2.2.2 ASSOCIATION FOR THE ADVANCEMENT OF MEDICAL INSTRUMENTATION. *Disposable ECG electrodes*. ANSI/AAMI EC12-1991. Arlington (Vir.): AAMI, 1991. American National Standard. ISBN 0-910275-61-0.

2.2.3 ASSOCIATION FOR THE ADVANCEMENT OF MEDICAL INSTRUMENTATION. *Standard for ECG connectors.* ANSI/AAMI ECGC-1983. Arlington (Vir.): AAMI, 1983. American National Standard. ISBN 0-910275-21-1.

3 Requirements

3.1 Labeling requirements

In addition to federal regulations applicable to the labeling of all medical devices, the requirements of this section shall apply to all devices within the scope of this standard.

3.1.1 Device markings

3.1.1.1 Product identification and characteristics

Diagnostic ECG devices shall be clearly and permanently marked with the following information:

a) the manufacturer's name, trademark, trade name, or other recognizable identification;

© *2000 Association for the Advancement of Medical Instrumentation*

Single user license only. Copying, networking, and distribution prohibited.

b) the catalogue, style, model, or other type designation;

c) the serial number;

d) the range of supply (mains) voltage and the maximum operating current or power;

e) the nominal supply (mains) frequency;

f) the number of phases, unless the device is intended for single-phase use only;

g) the current-carrying capacity of each convenience receptacle and/or identification of the instrument(s) which can be connected to it if the device provides mains power for other devices.

3.1.1.2 Panel controls and switches

All controls, switches, and connectors shall be clearly and concisely labeled to identify their function.

3.1.1.3 Electrical safety

Where markings are affixed to the electrocardiograph warning maintenance personnel of the potential shock hazard from accidental contact with parts, or identifying electrocardiographs with current ratings that may overload branch circuits supplying the electrocardiograph, these markings shall be placed in locations suitable for the intended use and shall be clearly visible.

NOTE—Markings that are inside the enclosure of the equipment shall be considered clearly visible if they can be viewed when the connections to the supply are being made or inspected. Markings that are inside the enclosure of cord-connected equipment are considered to be clearly visible if the markings would be seen before a hazard is encountered.

3.1.1.4 Fuse holders

If fuse holders accessible to the operator are provided, they shall be clearly marked with the applicable fuse rating, in amperes, and with the fuse type.

3.1.1.5 Patient-electrode connection nomenclature and colors

Colors, if used, shall be associated with either individually colored patient lead conductors and/or if plug bodies are used, with the bodies at the electrode ends. Cable legends of a permanent type (e.g., engraved) shall also be used for individual patient-electrode connection identification. The standard color code for patient lead conductors, as well as electrode placement, shall conform to the specifications of table 1.

NOTE—See A.3.1.1 for information concerning the differences between the color code specified in this requirement and that recommended by the International Electrotechnical Commission (IEC).

3.1.2 Operator's manual

An operator's manual, containing adequate instructions for the proper installation and the safe and effective operation of the device and identifying acceptable repair facilities, shall be provided with each unit (or in the case of multiple orders, as specified in the purchase contract). At least the following information shall be supplied.

© *2000 Association for the Advancement of Medical Instrumentation*

Single user license only. Copying, networking, and distribution prohibited.

Table 1—Patient electrode connection definitions and color code			
System	**Patient electrode connection identifier**	**Color code**	**Position on body surface**
Conven-tional	RA	White	Right arm
	LA	Black	Left arm
	LL	Red	Left leg
	V	Brown	Single movable chest electrode
	V1	Brown/red	4th intercostal (IC) space at right border of sternum
	V2	Brown/yellow	4th IC space at left border of sternum
	V3	Brown/green	Midway between V2 and V4
	V4	Brown/blue	5th IC space on left midclavicular line
	V5	Brown/orange	Left anterior axillary line at the horizontal level of V4
	V6	Brown/violet	Left midaxillary line at the horzontal level of V4
	RL	Green	Right leg
Frank vector	I	Orange/red	At the right midaxillary line 1)
	E	Orange/yellow	At the front midline1)
	C	Orange/green	Betweeen front midline and left midaxillary line at angle of 45 degrees
	A	Orange/brown	At the left midaxillary line1)
	M	Orange/black	At the back midline1)
	H	Orange/violet	On the back of the neck or on the forehead
	F	Red	On the left leg

[1])Located at the transverse level of the ventricles (i.e., 5th interspace at the left sternal border).

3.1.2.1 Disclosure of cautionary information/ performance characteristics

a) Cautionary information. Cautionary information and prominent labeling shall be provided, where possible use or exposure could create a potential hazard or could damage the electrocardiograph, including, but not limited to, use of the device in the vicinity of explosive anesthetics and use in the presence of electromagnetic interference or power overloads caused by electrosurgical or diathermy instruments.

b) Battery-powered devices. For ECG devices equipped with batteries, the manufacturer shall disclose the minimum operating time of the device and of any connected accessories, provided that the batteries are new and fully charged. For rechargeable batteries, the manufacturer shall disclose the battery charge time from depletion to 90 percent charge. In addition, if a battery depletion indicator is provided, its function shall be described.

c) Accuracy of input signal reproduction. The manufacturer shall disclose the methods used to establish overall system error and frequency response. The system may be tested in either of two ways, as described in 3.2.7.2 and 4.2.7.2. Because of their sampling characteristics and the asynchronism between sample rate and signal rate, digital systems may produce a noticeable modulating effect from one cycle to the next, particularly in pediatric recordings. This phenomenon, which is not physiologic, shall be clearly described in the operator's and service manuals.

d) Electrode polarization. The manufacturer shall describe the need to pay special attention to the type of electrodes used, since some electrodes may be subject to large offset potentials due to polarization. Recovery time after application of defibrillator pulses may be especially compromised. Squeeze bulb electrodes commonly used for diagnostic ECG recording may be particularly vulnerable to this effect.

3.1.2.2 Applications notes

Appropriate information concerning the application of the device shall be provided, including but not limited to:

© *2000 Association for the Advancement of Medical Instrumentation*

Single user license only. Copying, networking, and distribution prohibited.

a) a description of the device's intended application and available functions;

b) the procedures for checking proper operation of all controls and functions of the device;

c) the manufacturer's recommendations concerning type(s) of electrodes that should be used with the device to ensure conformance of the device with the requirements of this standard, as well as a clear warning that electrodes of dissimilar metals should not be used unless the amplifier can handle polarization potentials as high as 1 volt (V).

3.1.3 Service manual

A service manual, containing adequate care, preventive maintenance, and repair instructions, shall be provided with each unit upon request (or, in the case of multiple orders, as specified in the purchase contract). These instructions shall include items such as electronic circuit schematics, test points, waveforms, logic and/or block diagrams, wiring diagrams, parts lists, and component values. This information shall be complete enough to allow a skilled technician to accomplish reasonable field repair, calibration, and other maintenance needed to ensure conformance of the device with the manufacturer's specifications. In addition, the instructions shall identify acceptable repair facilities and include recommendations concerning (a) test methods that can be used for verification of device performance, and (b) the frequency with which preventive maintenance procedures should be implemented. A copy of the operator's manual shall be available to service personnel.

NOTE—The operator's and service manuals may be combined if desired.

3.1.4 Summary

Table 2 provides a summary of the labeling/disclosure requirements of this standard.

3.2 Performance requirements

3.2.1 Operating conditions

Unless otherwise stated, the performance requirements of this standard shall be met under the following ambient environmental conditions:

Line voltage:	104 to 127 volts (V) rms
Line frequency:	60 ± 1 Hz
Temperature:	25 ± 10°C
Relative humidity:	50 ± 20 percent, noncondensing
Atmospheric pressure:	7×10^4 to 10.6×10^4 Pa (700 to1060 mbar)

NOTE—These ranges of operating conditions are not intended to provide assurance of the safety and effectiveness of devices intended for use under extreme or uncontrolled environmental conditions outside of a hospital environment or physician's office. Such devices are excluded from the scope of this standard.

3.2.2 Lead definition

The definitions of lead sets employing the 12 conventional or orthogonal (Frank) leads shall conform to table 3. The voltage difference is defined algebraically in the second column of the table (see 3.2.7.4 for coefficient tolerances). Single-channel ECG devices shall provide lead selection of at least the first seven leads in table 3. Three-channel devices shall provide selection of at least the first 12 leads of table 3.

3.2.3 Input dynamic range

The ECG device shall be capable of responding to and displaying differential voltages of ± 5 millivolts (mV) varying at a rate up to 320 mV per second (s) from a dc offset voltage in the range of -300 mV to +300 mV, when applied to any lead. The time-varying output signal amplitude shall not change by more than ± 5

© *2000 Association for the Advancement of Medical Instrumentation*

Single user license only. Copying, networking, and distribution prohibited.

percent over the specified range of dc offset.

3.2.4 Gain control, accuracy, and stability

3.2.4.1 Gain settings and accuracy

The device shall provide fixed gain selections of 20 mm/mV, 10 mm/mV, and 5 mm/mV, with a gain accuracy of ± 5 percent.

3.2.4.2 Gain control

Continuously variable gain control may be provided if this mode is clearly indicated on the device control panel and if the recorded output indicates when this option is in use.

3.2.4.3 Gain switching

If automatic gain change or switching is provided, the recorded output shall indicate whenever the gain is changed. Any automatic gain switching shall have a manual override.

3.2.4.4 Gain stability

The gain change 1 minute after energizing the device shall not exceed 0.33 percent per minute. The total change in 1 hour shall not exceed ± 3 percent of any available fixed gain setting.

NOTE—Devices that provide simultaneous permanent records and nonpermanent displays need not provide the same gain for both.

3.2.5 Time base selection and accuracy

3.2.5.1 Time base selection

The device shall provide at least two time bases: 25 mm/s and 50 mm/s.

© *2000 Association for the Advancement of Medical Instrumentation*

Single user license only. Copying, networking, and distribution prohibited.

Table 2—Summary of labeling/disclosure requirements	
Section	**Requirement desciption**
3.1.1/3.1.1.1	Device markings/product identification and characteristic: manufacturer's identification name type designation; serial number; range of supply voltage and maximum operating current/power; nominal supply frequency; number of phases; current-carrying capacity of convienience receptacle.
3.1.1.2	Panel controls and switches: identification of controls, switches, connectors.
3.1.1.3	Electrical safety: readily visible markings for shock hazard and/or overcurrent ratings.
3.1.1.4	Fuse holders: fuse ratings in amperes and fuse type.
3.1.1.5	Patient electrode connection nomenclature and colors: conformance with table 1, if applicable.
3.1.2/3.1.2.1	Operator's manual: disclosure of cautionary information/performance characteristics
3.1.2.1a	Cautionary information: cautionary information regarding potential hazards/damage, including warnings on use of device in presence of explosive anesthetics and use of device in presence of electromagnetic interference or power overload caused by electrosurgical or diathermy instruments.
3.1.2.1b	Battery-powered devices: minimum operating time; battery charge time; function of battery depletion indicator, if provided.
3.1.2.1c	Accuracy of input signal reproduction: description of methods used by manufacturer to establish overall system error and frequency response; desciption of modulating effects in digital systems.
3.1.2.1d	Electrode polarization: cautionary statement concerning effect of electrode type on system recovery form overload, especially recovery time after defibrillator pulses.
3.1.2.2	Applications notes: desciption of device's intended applications and available functions; procedures for checking controls and functions; manufacturer's recommendations concerning electrodes.
3.1.3	Service manual: adequate care, preventive maintenance, and repair instructions; electrical specifications complete enough to allow reasonable field repair; identification of acceptable repair facilities; recommended frequency of preventive maintenance.

3.2.5.2 Time base accuracy

The time base accuracy shall allow measurements of time with an error of less than ± 5 percent, for time intervals between 0.2 and 2.0 s.

3.2.6 Output display

3.2.6.1 Input signals

The output display shall accommodate the signals specified in 3.2.3.

3.2.6.2 Channel width

The display width per channel shall be no less than 40 mm.

3.2.6.3 Trace width and visibility

The trace shall be visible at writing rates corresponding to 320-mV/s input signal rates, at a gain no lower than 5 mm/mV. The trace width shall not exceed 1 mm.

NOTE—User adjustment may be provided to fulfill this requirement.

3.2.6.4 Rectangular coordinates/alignment of writing points

ECG devices shall provide recordings in rectangular coordinates. Departure from time axis alignment of the writing points of a multichannel electrocardiograph shall be less than 0.5 mm or indicated 10 ms, whichever is greater.

© *2000 Association for the Advancement of Medical Instrumentation*

Single user license only. Copying, networking, and distribution prohibited.

Table 3—Definition of leads		
Lead nomenclature	**Definition**1)	**Name of lead**
I II	I = LA - RA II = LL - RA	Bipolar limb leads
III	III = LL - LA	(Einthoven)
aVR aVL aVF	aVR = RA - 0.5 (LA + LL) aVL = LA - 0.5 (LL + RA) aVF = LL - 0.5 (LA + RA)	Augmented leads (Goldberger)
V1 V2 V3 V4 V5 V6	V1 = V - 0.333 (LA + RA + LL)2) V2 = V - 0.333 (LA + RA + LL) V3 = V - 0.333 (LA + RA + LL) V4 = V - 0.333 (LA + RA + LL) V5 = V - 0.333 (LA + RA + LL) V6 = V - 0.333 (LA + RA + LL)	Unpolar chest leads (Wilson)
X Y Z	X = 0.610A + 0.171C - 0.781l Y = 0.655F + 0.345M - 1.000H -0.374E - 0.231C	Orthogonal vector leads (Frank)3)

1) The definition is given in terms of algerbraic equations, assuming that the electrode identifier represents the voltage sensed by the elctrode. See table 1 for a list of definitions of patients electrode connection identifiers.

2) For the unipolar chest leads, V represents the potential at each respective chest electrode location: i.e., for voltage V1, V represents the potential at wlwctrode location V1; for voltage V2, V represents the potential at electrode location V2; and so forth.

3) By convention, X is oriented horizontally and towards the left arm of the patient, Y points towards the feet, and Z is horizontal and towards the back of the patient.

3.2.6.5 Time and amplitude rulings

Rulings on preprinted recording media shall be in rectangular coordinates, with the time lines perpendicular to the edge of the recording medium with a maximum error of 0.5 percent of the effective recording width of the recording medium (e.g., 0.2 mm for a 40-mm width). Nominal ruling shall be 1 mm, major ruling 5 mm, with a tolerance of ± 2 percent for the environmental operating conditions specified in 3.2.1.

3.2.6.6 Time and event markers

When provided, markers shall not produce unwanted deflections greater than 0.5 mm in any channel at any gain setting. Time marker generation shall be accurate with an error of no greater than ± 2 percent of the timing interval(s) specified by the manufacturer. Recorders (such as photorecorders) that generate the grid markers shall be capable of time marking at 0.1 and 0.2 s, with a maximum error of ± 2 percent.

3.2.6.7 Reduced performance modes

Any operator adjustment or control which allows degrading of performance for any reason shall, when activated, result in an indication on the recording medium of this reduced performance mode.

3.2.7 Accuracy of input signal reproduction

3.2.7.1 Overall system error

Input signals, limited in amplitude and rate of change to ± 5 mV and 125 mV/s, respectively, shall be reproduced on the output recording medium with a maximum instantaneous deviation from the ideal of ± 5 percent or ± 40 microvolts (µV), whichever is greater.

© *2000 Association for the Advancement of Medical Instrumentation*

Single user license only. Copying, networking, and distribution prohibited.

Table 4—Frequency response			
Method	**Nominal input amplitude (mV p-p)**	**Input frequency and waveform**	**Relative output response (mm)**
A	1.0	0.67 to 40 Hz, sinusoidal	± 10% 1)
B	0.5	40 to 100 Hz, sinusoidal	+ 10%, - 30%1)
	0.25	100 to 150 Hz, sinusoidal	+ 10%, - 30%1)
C	0.5	150 to 500 Hz, sinusoidal	+ 10%, - 100%1)
D	1.5	≤ 1 Hz, 20 ms, triangular	+ 0, - 10% 2)

1) relative to 10-Hz output
2) relative to 200-ms output

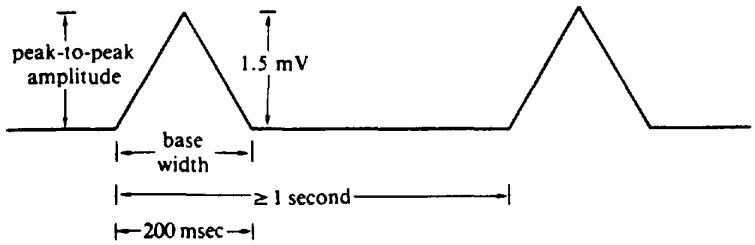

Figure 1—Triangular wave signal (for 3.2.7.2, Method D)

3.2.7.2 Frequency and impulse response

The device shall exhibit a frequency response conforming to the specifications of table 4, at a gain setting of 10 mm/mV.

NOTE—The device must meet the requirements of Methods A and D, or alternately, the requirements of all of Methods A, B, and C of table 4. The manufacturer must disclose which of the two sets of requirements (or both) are met (see 3.1.2.1[3]).

For Methods A, B, and C, the output response is relative to that obtained at 10Hz. For Method D, the output response is relative to that obtained for a repetitive, triangular wave signal with a base width of 200 ms and a repetition rate of 1 Hz or less (figure 1).

Additionally, the device shall respond to an impulse as follows:

a) A 0.3 mV-s (3 mV for 100 ms) impulse input shall not produce a displacement greater than 0.1 mV outside the region of the impulse.

b) For a 0.3 mV-s (3 mV for 100 ms) impulse input, the slope of the response shall not exceed 0.30 mV/s following the end of the impulse.

3.2.7.3 Lead weighting factors

ECG devices employing standard lead sets shall use lead weighting factors as specified in table 3. Weighting factors shall be accurate to within ± 5 percent.

3.2.7.4 Hysteresis

The hysteresis of the permanent recording system shall not exceed 0.5 mm, after a deflection of 15 mm in either direction from baseline. In addition, the device shall exhibit a "response to minimum signal": a 10-Hz, 20-µV peak-to-peak (p-p) sinusoidal signal shall yield a visible recorded deflection at a time base of

© *2000 Association for the Advancement of Medical Instrumentation*

Single user license only. Copying, networking, and distribution prohibited.

25 mm/s and a gain setting of 10 mm/mV.

3.2.8 Standardizing voltage

A standardizing voltage shall be provided having a value and form that produce a step change in display output whose amplitude is within ± 5 percent of the step amplitude obtainable by applying a 1.00 ± 0.01-mV signal at the appropriate lead. The standardizing voltage provided to test this step response shall exhibit a rise time of less than 1 ms and a decay time constant of at least 100 s. The standardizing signal shall provide an indication of operator adjustment of the gain. The signal shall be applied to all available channels of multichannel recorders. An alternate waveform for the standardizing voltage, consisting of a pulsed triangular waveform with peak amplitude within ± 5 percent of the step amplitude obtained by applying a 1.00 ± 0.01-mV signal at the appropriate lead, is acceptable. The base width of this monophasic triangular waveform shall be 100 ± 5 ms.

3.2.9 Input impedance

An electrode-to-skin impedance, simulated by a 0.62-megohm resistor in parallel with a 4.7-nanofarad (nF) capacitor, in series with any patient-electrode connection, shall not result in a signal reduction of more than 20 percent of that obtained without the simulated impedance, within the bandwidth of the ECG device. This reduction shall not be exceeded with dc offset potentials as specified in 3.2.3. These requirements shall be met at all appropriate settings of the lead selector. (A single-ended input impedance of at least 2.5 megohms at 10 Hz will be needed to meet these requirements.)

3.2.10 Direct currents in patient-electrode connections

The direct current through any patient-electrode connection, with all patient-electrode connections connected to a common node, shall not exceed 0.1 µA for any patient-electrode connection that serves as an amplifier input for measurement of ECG potentials, or 1 µA for any other patient-electrode connection.

3.2.11 Common mode rejection

The ECG device shall have the capability of rejecting 60-Hz common mode interfering voltages as encountered on the surface of the body. With all patient-electrode connections connected to a common node through a 51-kilohm resistor and a 47 nF capacitor including RL, if supplied, a 60-Hz, 20-V rms signal applied to the common node through a 100-pF capacitor shall not produce an output signal exceeding 1 mV p-p referred-to-input (RTI) over a 60-s period. This requirement shall be met with sequential shorting of the series-impedance-simulating lead imbalance in each active lead and with a dc offset potential placed in series with any patient-electrode connection, as specified in 3.2.3. The manufacturer's recommended patient cable shall be used for verification testing.

NOTE—In conducting a test to verify this capability, undesirable stray and leakage capacitances may result from shielding components and from patient cable capacitances when the cable is connected to the voltage source. The test method of 4.2.11 takes these capacitances into consideration.

3.2.12 System noise

3.2.12.1 Cable, circuit, and output display noise

Noise due to the patient cables, all internal circuits, and output displays shall not exceed 30 µV p-p RTI over a 10-s period, when the manufacturer's recommended cable is used and when all inputs are connected together through a 51-kilohm resistor in parallel with a 47-nF capacitor in series with each patient-electrode connection.

3.2.12.2 Channel crosstalk

Input signals limited in amplitude and rate of change as per 3.2.3, applied to any one lead of a multichannel

© *2000 Association for the Advancement of Medical Instrumentation*

Single user license only. Copying, networking, and distribution prohibited.

electrocardiograph and with all unused inputs connected to patient reference through a 51-kilohm resistor in parallel with a 47-nF capacitor, shall not produce unwanted output greater than 2 percent of the applied signals (multiplied by the gain) in those channels where no signal is applied.

3.2.13 Baseline control and stability

3.2.13.1 Reset

A 1-V p-p, 60-Hz overload voltage shall be applied for at least 1 s to any lead. After removal of this overload voltage, provision shall be available to restore a 1-mV p-p trace to the recording width of the display within 3 s.

3.2.13.2 Baseline stability

One minute after energizing the device and at least 10 s after activation of the reset function with the patient-electrode connections connected through 25-kilohm resistors, the baseline drift rate at output shall not exceed 10 μV/s RTI over any 10-s period. (The baseline is defined as the trace location 10 s after activation of the reset function.) In addition, the total baseline drift shall not exceed 500 μV RTI in any 2-minute period. The device shall incorporate means to return the output trace to within 3 mm of the baseline within 1 s of switching leads.

3.2.14 Overload protection

3.2.14.1 AC voltage

The device shall meet the requirements of this standard after a 10-s application of a 1-V p-p, 60-Hz differential voltage to any patient-electrode connection with any lead selection combination.

3.2.14.2 Defibrillator overload protection

3.2.14.2.1 Recovery

The electrocardiograph shall recover within 8 s after exposure of any patient-electrode connection/lead combination to simulated defibrillator discharges having a damped sinusoidal waveform conforming to the limits specified in the American National Standard, *Cardiac defibrillator devices* (applicable document 2.1.2). The source generator shall have a minimum stored voltage of 5000 V, and the energy delivered to the test assembly shall be 360 J. The waveforms are to be delivered at 20-s intervals into a 100 ohms load, with 400 ohms interposed between the 100 ohm defibrillator load and one connection of the ECG device.

3.2.14.2.2 Reduction in energy delivered to the patient

The electrocardiograph shall incorporate current limiting devices so that the defibrillator energy delivered to the 100 ohm load is reduced by a maximum of 10 percent relative to the energy delivered to this load with the electrocardiograph disconnected. The number of required discharges shall be as specified in table 9.

3.2.14.2.3 Operator safety

In the case of a device that may be operated from battery power, application of defibrillator pulses in the arrangements described above, but with the electrocardiograph disconnected from any ac wall outlet and the power switch turned off, shall not make available more than 100 microcoulombs (μC) of charge to operator-accessible chassis points or controls of the electrocardiograph. In the case of a device that may be operated from battery power, the device shall also meet this requirement while disconnected from any ac wall outlet. After this test, the device shall meet the requirements of 3.2.3 through 3.2.13 and the requirement of 3.2.15.

3.2.14.3 Pacemaker pulse display capability

The device shall have the capability of displaying the ECG signal in the presence of pacemaker pulses with

© *2000 Association for the Advancement of Medical Instrumentation*

Single user license only. Copying, networking, and distribution prohibited.

amplitudes between 2 and 250 mV, durations between 0.1 and 2.0 ms, a rise time of less than 100 µs, and a frequency of 100 pulses/minute. For pacemaker pulses having durations between 0.5 and 2.0 ms (and amplitude, rise time, and frequency parameters as specified above), an indication of the pacemaker pulse shall be visible on the recording; this indication shall be visible on the display with an amplitude of at least 0.2 mV RTI.

3.2.15 Risk currents

The device shall utilize isolated patient connections. The risk currents flowing to or from the patient through the patient-electrode connections, chassis, or controls of the electrocardiograph shall not exceed the limits specified in the American National Standard, *Safe current limits for electromedical apparatus* (applicable document 2.1.1).

3.2.16 Auxiliary output

3.2.16.1 Where an auxiliary output is provided, the device shall meet all specifications after removal of a short-circuit applied to the auxiliary output for 1 minute.

3.2.16.2 The risk current limits specified in 3.2.15 shall not be exceeded upon proper connection of an auxiliary device to the auxiliary output. Such proper connection shall be described in the operator's manual.

3.2.17 Summary

© *2000 Association for the Advancement of Medical Instrumentation*

Single user license only. Copying, networking, and distribution prohibited.

Table 5 provides a summary of the performance requirements of this standard.

Table 5—Summary of performance requirements

Section	Requirement description	Min/max	Units	Min/max value
3.2.1	Operating conditions:			
	line voltage	range	V rms	104 to 127
	frequency	range	Hz	60 ± 1
	temperature	range	°C	25 ± 10
	relative humdity	range	%	50 ± 20
	atmosphere pressure	range	Pa	7×10^4 to 10.6×10^4
3.2.2	Lead definition	NA	NA	table 3
	Number of leads:			
	single-channel	min	NA	7
	three-channel	min	NA	12
3.2.3	Input dynamic range:			
	range of linear operations of input signal	min	mV	± 5
	slew rate change	max	mV/s	320
	DC offset voltage range	min	mV	±300
	allowed variation of amplitude with DC offset	max	%	± 5
3.2.4	Gain control, accuracy and stability:			
	gain selections	min	mm/mV	20, 10, 5
	gain error	max	%	5
	manual override of automatic gian control	NA	NA	NA
	gain change rate/minute	max	%/min	± 0.33
	total gain change/hour	max	%	± 3
3.2.5	Time base selection and accuracy:			
	time base selections	min	mm/s	25, 50
	time base error	max	%	± 5
3.2.6	Output display:			
	general	NA	NA	per 3.2.3
	width of display	min	mm	40
	trace visibility (writing rates)	max	mm/s	1600
	trace with (permanent record only)	max	mm	1
	departure from time	max	mm	0.5
	axis alignment	max	ms	10
	preruled paper division	min	div/cm	10
	error of rulings	max	%	± 2
	time marker error	max	%	± 2
3.2.7	Accuracy of input signal reproduction:			
	overall error for signals	max	%	± 5
	up to ± 5 mV & 125 mV/s	max	µV	±40
	upper cut-off frequency (3dB)	min	mm	13.5
	response to 20 ms, 1.5 mV triangular input	min	mm	13.5
	response to 0.3 mV·s impulse	max	mV	0.1

© *2000 Association for the Advancement of Medical Instrumentation*

Single user license only. Copying, networking, and distribution prohibited.

	displacement slope	max	mV/s	0.30
	error in lead weighting factors	max	%	5
	hysteresis after 15-mm deflection from baseline	max	mm	0.5
3.2.8	Standardizing voltage:1)			
	nominal value	NA	mV	1.0
	rise time	max	ms	1
	decay time	min	s	100
	amplitude error	max	%	± 5
3.2.9	Input impedance at 10Hz (each lead)	min	megohms	2.5
3.2.10	DC current (any input lead)	max	µA	0.1
	DC current (any other patient electrode)	max	µA	1.0
3.2.11	Common mode rejection:			
	allowable noise with 20 V, 60 Hz & ± 300 mV dc &	max	mm	10
	51-kilohm imbalance	max	mV	1
3.2.12	System noise:			
	RTI, p-p	max	µV	30
	multichannel crosstalk	max	%	2
3.2.13	Baseline control and stability:			
	retun time 10 s after reset	max	s	3
	return time after lead switch	max	s	1
	Baseline stability:			
	baseline drift rate RTI	max	µV/s	10
	total baseline drift RTI (2-min period)	max	µV	500
3.2.14	Overload protection:			
	No damage from differential voltage, 60-Hz, 1 - V p-p, 10-s application	min	V	1
	No damage from sumulated defibrillator discharges:			
	overvoltage	NA	V	5000
	energy	NA	J	360
	recovery time	max	s	8
	energy reduction by defibrillator shunting	max	%	10
	transfer of charge through defibrillator chassis	max	µC	100
	ECG display in presence of pacemaker pulses:			
	amplitude	range	mV	2 to 250
	pulse duration	range	ms	0.1 to 2.02)
	rise time	max	µs	100
	frequency	max	pulses/min	100
3.2.15	Risk current (isolated patient connection)	as per applicable document 2.1.1		
3.2.16	Auxillary output (if provided):			
	no damage from short circuit risk current (isolated patient connection)	as per applicable document 2.1.1		

© *2000 Association for the Advancement of Medical Instrumentation*

Single user license only. Copying, networking, and distribution prohibited.

[1])Square wave pulse only; not applicable to triangular waveform.

4 Test methods

This section provides referee test methods and procedures by which compliance of the device with the requirements of section 3 are verified. The paragraph numbers below correspond with those of section 3 except for the first digit; e.g., conformance with the requirement of 3.2.3 can be determined by the test method of 4.2.3.

NOTE—Other tests may be used for purposes of design qualification, provided that equivalence with the referee tests can be established in terms of comparability of test results. These referee tests are not intended for use in verifying the performance of individual devices, either for purposes of quality assurance inspections by the manufacturer or for purposes of routine inhospital inspections by the device user.

General instrumental and procedural requirements for conducting the tests are provided below.

Test conditions

Unless otherwise specified, all measurements and tests shall be performed at the standard operating conditions specified in 3.2.1. During testing of battery-powered units, the battery voltage shall be within the manufacturer's specifications. Measurement tolerances are ± 1.4°C for temperature and ± 5 percent for humidity. Filter settings, if supplied, must remain unchanged during the entire battery of tests.

Test apparatus

The following test instruments will be required:

a) An oscilloscope with a differential input amplifier having an input impedance of at least 1 megohm and an amplitude resolution of 10 µV. The 3-dB frequency response must be at least dc to 1 MHz, with a midband amplitude accuracy of ± 5 percent;

b) A voltmeter capable of measuring dc voltages in the range of 1 mV to 1 V with an accuracy of ± 1 percent; and a voltmeter or peak-to-peak (p-p) amplitude detector capable of measuring p-p sinusoidal and triangular signals, in the voltage range of 0.1 to 10 V, with an accuracy of ± 1 percent;

c) Two signal generators capable of generating sinusoidal, square-wave and triangular waveforms with frequencies ranging from 0.05 to 1000 Hz. The signal generators must have adjustable voltage outputs up to at least 10 V p-p which are balanced and isolated from ground;

d) A high-voltage power supply and power resistor capable of charging a 32-µF capacitor to 5000 V in less than 20 s.

Test circuits

Unless otherwise specified, the circuits described in the tests shall be made with resistors having a ± 5 percent tolerance for frequencies up to 1 MHz. Capacitors shall be nonpolarized, of suitable voltage rating, and have a tolerance no greater than ± 5 percent. Inductors shall also have a ± 5 percent tolerance.

Test signals and output measurement

Unless otherwise specified, input test signal amplitudes shall be set so that errors do not exceed ± 1 percent of the specified value for dc voltages or voltage steps. Triangular or sinusoidal test voltages shall be set within ± 2 percent of the specified p-p value.

The measurement of the output signal shall be made with the paper that is generated by the direct writer or, where appropriate, from a fixed image of the signal on the oscillographic screen. When necessary, a photograph of the signal, with a superimposed known graticule in the vertical and horizontal directions, may be used. Where a requirement or test is specified in µV RTI, the corresponding output in mm is obtained by

© *2000 Association for the Advancement of Medical Instrumentation*

Single user license only. Copying, networking, and distribution prohibited.

multiplying the μV value by the device gain expressed in mm/mV and dividing by 1000. Distance measurements on the output traces must be made with a linear optical enlarger with a scale accurate to 0.1 mm. Distances must be expressed to the nearest 0.1 mm. The line thickness of the output trace may be as much as 1 mm; therefore, care must be taken to measure distance from points on the same edge of the trace. Figure 2 shows an example of amplitude and time measurement.

Noise interference

The performance tests must be conducted so as to minimize extraneous noise interference and pickup, as is good practice in recording clinical electrocardiograms. The following techniques are among the means by which this can be accomplished:

a) routing the ECG cables so the area between the electrode cables is minimized;

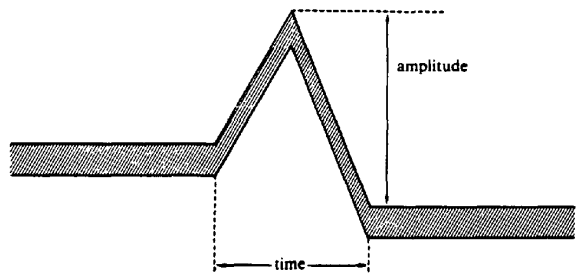

Figure 2—Example of time and amplitude measurement

b) balancing and placing the oscilloscope probes to minimize extraneous interference pickup during oscilloscopic measurement of differential voltages in the mV to μV range;

c) constructing test circuits, where feasible, in shielded boxes and wiring them to minimize noise.

Recording conditions

Standard recording conditions for the device are a gain setting of 10 mm/mV and a time base of 25 mm/s. The frequency response switches, if any, are set for the response band(s) stated by the manufacturer to be required to meet the specifications in the standard. The lead selector, if any, is to be set in the Lead I position. Tests are performed after a warm-up period of at least 15 minutes, unless otherwise indicated.

4.1 Labeling requirements

Compliance with the labeling requirements of 3.1 can be verified by inspection.

4.2 Performance requirements

4.2.1 Operating conditions

The environmental operating conditions are recorded and checked against the values specified in 3.2.1. Compliance with the specified line voltage range is demonstrated if the device meets all requirements of this standard at a line voltage as low as 104 V and as high as 127 V rms.

4.2.2 Lead definition

Compliance with the requirements of 3.2.2 can be verified by inspection.

4.2.3 Input dynamic range

The test is conducted according to the following procedure:

a) Adjust the signal generator of the test circuit of figure 3, with switches S1 and S2 closed and S3 in

© *2000 Association for the Advancement of Medical Instrumentation*

Single user license only. Copying, networking, and distribution prohibited.

position A, to generate a 16 ± 1-Hz triangular or sinusoidal signal having zero dc voltage offset between P1 and P2. One or more complete cycle of the 16-Hz signal, at a repetition rate of 1 Hz or greater, may be used. The peak-to-peak output signal shall cover 90 percent of the maximum display width of the device.

b) Connect the patient-electrode connections available to P1 or P2 as described in table 6.

c) Verify that the controls of the device can be adjusted, if necessary, to generate a clearly visible triangular or sinusoidal wave.

d) Measure the variation in amplitude of positive and negative peaks over at least ten complete cycles of the waveform, and verify that the variation is no greater than ± 5 percent of the original amplitude upon insertion of dc offset voltages, in turn, of -300 mV, +300 mV, -150 mV, and + 150 mV. (Switch S3 is placed in position B to insert the dc offset voltages, and S4 is used to change the offset voltages.)

e) Repeat the preceding test for all physically distinct recording channels.

For standard lead sets, repeat the tests for all lead configurations listed in table 6.

4.2.4 Gain control, accuracy, and stability

4.2.4.1 Gain settings and accuracy

Whether ECG devices provide gain settings of 20 mm/mV, 10 mm/mV, and 5 mm/mV can be determined by inspection. Gain accuracy can be assessed by measuring the response to a 1-mV ± 1 percent pulse at each gain setting and by noting whether or not the peak deflection is within ± 5 percent of ideal.

4.2.4.2 Gain control

Compliance with 3.2.4.2 can be verified by inspection.

4.2.4.3 Gain switching

Compliance with 3.2.4.3 can be verified by inspection.

4.2.4.4 Gain stability

The gain change can be measured by applying an external plus and minus 1-mV step voltage to a chest lead, according to the procedure of 4.2.7.3. At 1-, 15-, 30-, and 60-minute intervals after the device has been energized, and at a gain setting of 10 mm/mV, the observed change in display step amplitude between any measurement must be less than 0.3 mm.

4.2.5 Time base selection and accuracy

4.2.5.1 Time base selection

That at least two time bases are provided (25 and 50 mm/s) can be determined by visual inspection and by operation of the time base selection mechanism.

4.2.5.2 Time base accuracy

Time base accuracy can be determined by the following procedure:

a) Connect a signal generator between any lead set of the ECG device (see table 6), and adjust the amplitude of a triangular signal to generate a signal of 5 mm p-p at 25 Hz (± 1 percent). At a time base of 25 mm/s, each peak should fall at 1-mm intervals; at 50 mm/s, each peak should fall at 2-mm intervals.

b) Record for at least 6 s at each time base, disregarding or discarding the first 1 s of data in each strip.

© *2000 Association for the Advancement of Medical Instrumentation*

Single user license only. Copying, networking, and distribution prohibited.

c) Using calipers and a vernier scale calibrated to 0.1 mm, measure the distance between 10, 20, and 40 successive peaks; the distances must be within 10 ± 0.5 mm, 20 ± 1.0 mm, and 40 ± 2.0 mm, respectively.

d) Repeat the measurements at least three times at different parts of the strip for each time base. Verify that the measurements fall within the ± 5 percent error band each time.

4.2.6 Output display

4.2.6.1 Input signals

Compliance with 3.2.6.1 can be determined by inspection.

4.2.6.2 Channel width

Compliance with 3.2.6.2 can be determined by inspection.

4.2.6.3 Trace width and visibility

At a time base of 25 mm/s and a gain of 5 mm/mV, adjust the stylus heat, ink feed, or equivalent control (if provided) to make a 20-mm p-p, 25-Hz, sinusoidal test signal just visible within the first five cycles after the initiation of the test voltage. The adjacent traces of the sinusoids must be clearly separated from each other. The trace width must not exceed 1 mm, 2 s after the 25-Hz signal is switched off.

4.2.6.4 Rectangular coordinates/alignment of writing points

Compliance with the requirements of 3.2.6.4 can be determined by the following procedure:

a) With the recording medium stationary, generate a 15-mm signal from the center of the recording channel and verify that the trace is parallel to the time rulings within 0.5 mm over the 30 mm of the signal. (If a trace cannot be recorded with the recording medium stationary, the ± 15-mm signal may be displayed at the maximum available time base.) Measure the time displacement in mm, from the beginning to the end of the step change, for both positive and negative direction steps. These values must not differ by more than the equivalent of 10 ms.

b) In addition, for multichannel electrocardiographs, record a 10-mm step change on all channels at a time base of 50 mm/s. Verify that the departure for the time axis alignment between any two writing points does not exceed 0.5 mm.

4.2.6.5 Time and amplitude rulings

The accuracy of the time and amplitude rulings on recording charts can be checked by inspection, using an optical enlarger with crossbars marked in 0.05-mm or smaller increments, and verifying that the grid squares delineated by 10 or 30 lines are within the ± 2 percent error band.

4.2.6.6 Time and event markers

It can be verified by inspection that the operation of the time marker, where provided, does not produce signals greater than 0.5 mm in any of the ECG recording channels. The test conditions are those specified in 4.2.12.1. As a separate measurement, time marker generation accuracy can be verified by direct time-interval or frequency measurement of the signal producing the time marks. Time mark intervals must be accurate to within ± 2 percent.

4.2.6.7 Reduced performance modes

Compliance can be verified by inspection.

4.2.7 Accuracy of input signal reproduction

© *2000 Association for the Advancement of Medical Instrumentation*

Single user license only. Copying, networking, and distribution prohibited.

NOTE—For multichannel devices, the following tests must be performed for each channel.

4.2.7.1 Overall system error

Overall system error can be assessed by the following procedure:

a) Set the gain at 10 mm/mV, and apply a 5-Hz sinusoidal signal to the appropriate patient-electrode connections so as to obtain a full-scale deflection of 50 mm (40 mm for those devices which have this limit).

b) Measure the input signal amplitude and compute gain as output/input. The computed gain must be within ± 5 percent of the nominal 10 mm/mV.

c) Repeat steps (a) and (b) for output deflections of 40, 30, 20, 10, and 5 mm.

d) Repeat steps (a), (b), and (c) for all available sensitivity settings without exceeding input voltages of ± 5 mV.

e) The computed gain in each instance must be within ± 5 percent or ± 40 μV of the nominal value, whichever is greater.

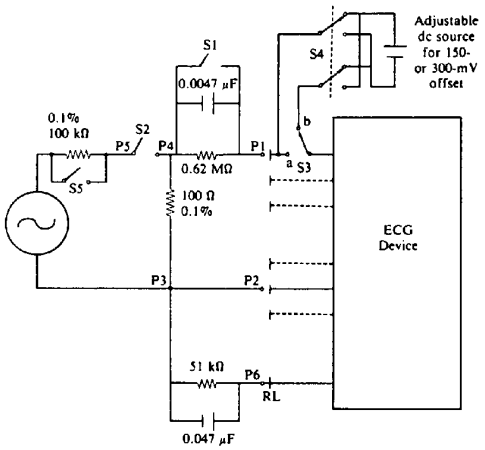

Figure 3—General test circuit

The 100-ohm and 100-kilohm resistors are 0.1 percent so as to provide an accurate voltage division.

NOTE—S5 is closed for the test of 4.2.14.1; otherwise, S5 is open.

© *2000 Association for the Advancement of Medical Instrumentation*

Single user license only. Copying, networking, and distribution prohibited.

Table 6—Patient electrode connection combinations for testing ECG			
Type	**Measuring lead1)**	**Patient electrode connection to P1**	**Patient electrode connection to P22)**
Standard	I	LA	RA
scalar	II	LL	RA
5-lead	III	LL	LA
or	aVR	RA	LA,LL
3-Channel	aVL	LA	RA,LL
12-lead	aVF	LL	LA,RA
scalar	V	V	LA,RA,LL
3-Channel Frank vector	X,Y, & Z	A, C, F, M	I,E,H

1)The right leg lead, if provided, shall be connected to P6 of figure 3, or the ground or negative side of other test circuits where appropriate.

2)Patient electrode connections supplied with the patient cable, but not specified in this table, may be connected to P2 of figure 3

4.2.7.2 Frequency and impulse response

For all tests, the gain setting is 10 mm/mV. The test procedure for Methods A, B, and C is as follows:

a) Connect the appropriate patient-electrode connections to a 10-Hz sinusoidal signal and adjust the input amplitude to obtain a 10-mm p-p output. Without changing the input amplitude, vary the signal frequency over the range of 0.67 to 40 Hz.

b) For a minimum of ten cycles, verify that the output waveform amplitude remains within ± 10 percent of the amplitude recorded at 10 Hz (see step [a]).

c) Adjust the input amplitude so as to obtain a 5-mm p-p output at 10 Hz. Without changing the input amplitude, vary the signal frequency over the range of 40 to 100 Hz.

d) Adjust the input amplitude so as to obtain a 2.5 mm p-p output at 10 Hz.Without changing the input amplitude, vary the signal frequency over the range of 100 to 150 Hz.

e) For a minimum of ten cycles, verify that the output waveform amplitude remains within + 10 percent and -30 percent of the amplitude recorded at 10 Hz.

f) Returning to the amplitude in step (c), vary the signal frequency over the range of 150 to 500 Hz.

g) For a minimum of ten cycles, verify that the output waveform amplitude remains within +10 percent and -100 percent of the amplitude recorded at 10 Hz (see step [c]).

h) Repeat these seven steps for each setting of the lead selector.

The test procedure for Method D is as follows:

a) At a gain setting of 10 mm/mV, connect the appropriate patient-electrode connection to a repetitive, triangular wave signal (see figure 1, 3.2.7.2) with a base width of 200 ± 20 ms. Adjust the input to produce an output amplitude of 15 ± 0.5 mm. Without changing the input amplitude, reduce the base width to 20 ± 1 ms. The repetition rate, selected to obtain the most irregular pattern of amplitudes of successive output peaks, may be 1 s or lower. This procedure will ensure that the full range of amplitude variability, which results from sampling points missing the peak of the triangular waveform, will be obtained.

© *2000 Association for the Advancement of Medical Instrumentation*

Single user license only. Copying, networking, and distribution prohibited.

b) For each of ten consecutive cycles, locate the point of maximum amplitude (M). Locate the point (P) that lies halfway in time between the peaks of consecutive cycles. Define the baseline as the average of the output amplitudes over 0.1 s about the point P. Each peak output amplitude is computed as the difference between the amplitude M and the baseline value preceding M in time. This amplitude must be no less than 90 percent of the peak amplitude recorded for the 200-ms triangular wave input signal.

Table 7—Patient electrode connection combinations and allowable error tolerances for weighting factors of standard lead sets

Lead select set to	Type	Signal input (mV p-p @ 10 Hz)	Patient electrode connec- tion to P1	Patient electrode connec- tion to P2	Allowable deflection (mm)	Allowed deviation normal—modified (mm)
aVR	Normal	2	RA	LA,LL,RL	20 ± 2	
						1.0
aVR	Modified	4	LA	RA,LL,RL	20 ± 2	
aVL	Normal	2	LA	LL,RA,RL	20 ± 2	
						1.0
aVL	Modified	4	LL	RA,LA,RL	20 ± 2	
aVF	Normal	2	LL	LA,RA,RL	20 ± 2	
						1.0
aVF	Modified	4	RA	LA,LL,RL	20 ± 2	
V1	Normal	2	V1	LA,RL,RA LL	20 ± 2	1.0
V1	Modified	6	LA	V1,RL,RA LL	20 ± 2	
V2	Normal	2	V2	RA,RL,LA LL	20 ± 2	1.0
V2	Modified	6	RA	V2,RL,LA LL	20 ± 2	
V3	Normal	2	V3	LL,RL,LA RA	20 ± 2	1.0
V3	Modified	6	LL	V3,RL,LA RA	20 ± 2	

Low frequency response using Method E:

Apply an input impulse of 3 mV amplitude and 100 ms duration and verify that the output baseline following the impulse is displaced no more than 0.1 mV, referred to the input, from the baseline preceding the impulse. Verify also that the slope of the response does not exceed 0.30 mV/s following the end of the impulse.

4.2.7.3 Lead weighting factors

For assessing the accuracy of standard lead weighting factors, the test sequence is as follows:

a) Attach the device, set at the standard operating conditions, to the test circuit of figure 3 with all switches closed and the patient-electrode connections connected, in turn, in each of the configurations listed in table 7.

b) Adjust the amplitude of the 10-Hz sinusoidal generator to the value given in table 7 for the configuration being tested.

c) Verify that the output peak-to-peak values are within the amplitude range of 18 to 22 mm in each case. Also verify that the difference between any two amplitudes is no greater than 1.0 mm for

© *2000 Association for the Advancement of Medical Instrumentation*

Single user license only. Copying, networking, and distribution prohibited.

weighting factors of standard lead sets.

For Frank leads:

a) Attach the device, set at the standard operating conditions, to the test circuit of figure 3 with switches S1 and S2 closed and with the patient-electrode connections connected to P1 and P2 in each of the configurations listed in table 8.

b) Adjust the sinusoidal generator at 10 Hz to the peak-to-peak amplitude given in table 8 for the electrode set being tested.

c) Adjust any baseline control so that the signal is displayed in the middle of the recording channel.

d) Verify that the peak-to-peak values for the X, Y, and Z outputs are within the tolerances given in table 8 for each measurement.

4.2.7.4 Hysteresis

With the ECG device set at the standard operating conditions, a +1.5-mV pulse, having an exponential trailing edge with a time constant of at least 50 ms, is applied to any patient-electrode connection. Two seconds after application of the pulse, the output trace must have returned to within ± 0.5 mm of the initial baseline value. This test is then repeated using a -1.5-mV pulse. The "response to minimum signal" requirement can be checked by applying a 10-Hz, 20-µV p-p signal to any lead at a time base of 25 mm/ms, and then inspecting the record.

© *2000 Association for the Advancement of Medical Instrumentation*

Single user license only. Copying, networking, and distribution prohibited.

Table 8—Frank vector weighting factor test				
Lead measured	**Sinusoidal input signal at 10Hz (p-p mV)**	**Patient electrode connection to P1**	**Patient electrode connection to P2**	**Allowable output range (mm)**
X Y Z	2	A,C,F,M	I,E,H,RL	14.5 to 16.5 19 to 21 11.5 to 13.5
X Y Z	4	A	all others	23 to 26 0 to 1 5 to 6
X Y Z	10	C	all others	16.5 to 18.5 0 to 2 21.5 to 24.5
X Y Z	6	E	all others	0 to 1 0 to 1 21.5 to 24
X Y Z	4	A,F	all others	23 to 26 25 to 28 5 to 6
X Y Z	3	I	all others	22 to 25 0 to 1 7.5 to 8.5
X Y Z	3	M	all others	0 to 1 9.5 to 11 20.5 to 23.5
X Y Z	2	H	all others	0 to 1 19 to 21 0 to 1

4.2.8 Standardizing voltage

Compliance with 3.2.8 can be verified by the following test procedure:

a) Connect the ECG device as shown in figure 3, with switch S1 closed and switch S2 open. Set the gain at 10 mm/mV and activate the standardization mechanism to generate the calibration pulse on all available channels.

b) Verify that the display pulse(s) has (have) an amplitude within ± 5 percent of the amplitude obtained when a 1.00 ± 0.01-mV signal is applied as per 4.2.7.3.

c) Repeat the above tests for all fixed gain settings to verify that the standardization pulse correctly reflects the gain setting. The error must be less than ± 5 percent of the expected value or 0.5 mm, whichever is greater. For square wave pulses, pulse amplitudes must be measured 20 to 40 ms after pulse initiation.

d) For multichannel ECG devices, verify that the standardization signal appears on all channels.

4.2.9 Input impedance

The following tests must be performed for all lead configurations available on the ECG device:

© *2000 Association for the Advancement of Medical Instrumentation*

Single user license only. Copying, networking, and distribution prohibited.

a) Energize the ECG device and set it at a gain of 10 mm/mV.

b) Connect the ECG device to the test circuit of figure 3, with switches S1 and S2 closed, S3 in position A, and the appropriate patient-electrode connections for the test lead connected to P1 and P2. All unused patient-electrode connections are connected to P6. Adjust the sinusoidal generator to a frequency of 1 Hz and to an amplitude yielding 20 mm p-p at the display.

NOTE—Table 6 lists the appropriate patient-electrode connection combinations to be connected to test points P1 and P2 for testing ECG devices employing standard lead sets.

c) Open switch S1 and measure the change in amplitude at the output. The signal amplitude in the steady state shall not decrease by more than 20 percent.

d) Repeat steps (a) and (b) with frequencies of 0.5, 10, 20, and 100 Hz. Verify that opening switch S1 does not decrease the output by more than 20 percent.

e) Repeat steps (b) and (c) with a ± 300-mV dc offset superimposed on the sinusoidal test signal. (Switch S3 is placed in position B to insert the dc offset voltages.)

4.2.10 Direct currents in patient-electrode connections

Currents intentionally introduced into the electrode leads shall be measured by the test procedures of the American National Standard, *Safe current limits for electromedical apparatus* (applicable document 2.1.1). The measured values for the risk currents shall not exceed the manufacturer`s disclosed values. For each patient-electrode connection, the dc component can be measured by connecting a 100-kilohm resistor between that patient-electrode connection and a node in common with all other patient-electrode connections. The dc voltage across any resistor must not exceed 10 mV for a patient-electrode connection that serves as an amplifier input, or 100 mV for any other patient-electrode connection. This measurement must be made with each patient-electrode connection, in turn.

4.2.11 Common mode rejection

Common mode rejection capability can be measured by the following procedure:

a) With all patient-electrode connections joined to a common node (figure 4) and with the RL or green lead, if supplied, connected through a 51-kilohm resistor and a 47-nF capacitor to the common node, apply a 60-Hz, 20-V rms signal to the common node through a 100-pF capacitor. The negative side of the generator is connected to power ground, and the device is operated at the frequency bandwidth of 3.2.7.2 and at a gain of 10 mm/mV or higher. Switches S1 through Sn are open; Sa is closed. With the patient cable disconnected, adjust C_t such that the voltage across it is 10 V rms (see figure 4).

b) Verify that the measured peak-to-peak output noise over a 60-s time period does not exceed 10 mm p-p (1 mV RTI) for each available lead setting.

c) Repeat the test with a plus and minus 300-mV dc offset in series with the imbalance impedance, by opening Sa and testing with the double-pole, double-throw (DPDT) switch in each of its two positions.

d) Repeat the above tests with each of the switches S1 through Sn closed, in turn.

4.2.12 System noise

4.2.12.1 Cable, circuit, and output display noise

The manufacturer's recommended patient cable, or equivalent, must be used when conducting the following test:

a) Insert in series with each patient-electrode connection a 51-kilohm resistor in parallel with a 47-nF

© *2000 Association for the Advancement of Medical Instrumentation*

Single user license only. Copying, networking, and distribution prohibited.

capacitor, as shown in figure 4. Connect all of the patient-electrode connections together, including the right leg (RL) connection.

b) With the device adjusted for the highest gain, verify that the noise on the output trace is no greater than 30 µV p-p RTI for a period of at least 10 s, for any position of the selector switch. Note that the input signal and 100-pF capacitor are not connected for this test.

c) Repeat this test nine more times. Verify that the 30-µV limit is not exceeded for at least nine of the ten trials. The ten trials must be conducted over a time period not to exceed 30 minutes, and the leads must not be disconnected between trials.

4.2.12.2 Channel crosstalk

Compliance with 3.2.12.2 can be verified by the following test:

a) Connect the multichannel ECG device to the test circuit of figure 3, with switches S1 and S2 closed, switch S3 in position A, and patient-electrode connections LL, V1, and, if provided, the Frank (E) joined to P1. All unused patient-electrode connections are joined via P2 to the reference lead through a parallel combination of a 51-kilohm resistor and a 47-nF capacitor.

b) Adjust the signal generator to produce a 2.5-mV p-p, 30-Hz triangular wave between P1 and P2.

c) Operate the device at the standard gain and time base, and record the outputs, which should display leads I, II, and III. The output of the lead I channel must be less than 0.5 mm.

d) Reconnect LL from P1 and P2 and RA from P2 to P1, and record the outputs which display leads I, II, and III. The output of the lead III channel must be less than 0.5 mm.

e) Reconnect RA from P1 and P2 and LA from P2 to P1, and record the outputs. The output of the lead II channel must be less than 0.5 mm.

f) Connect V1 only to P1 and all other patient-electrode connections, via P2, to the reference lead through the parallel combination of 51 kilohms and 47 nF. Record the outputs of all channels. The output of all channels except that displaying V1 must be less than 0.5 mm.

g) Repeat (f) with V2 through V6 connected, in turn, to P1 and with all other patient-electrode connections connected to P2 as above. In each case, the output of all channels except the one displaying the lead connected to P1 must be less than 0.5 mm.

h) For Frank leads, the channels displaying X and Y outputs must have outputs less than 0.5 mm.

4.2.13 Baseline control and stability

4.2.13.1 Reset

Compliance with 3.2.13.1 can be determined by the following method:

a) Connect the ECG device to the test circuit of figure 3 with switches S1 and S2 closed, S3 in position A, and S5 opened. Adjust the sinusoidal generator to produce a 10-Hz, 1-mV p-p signal between P1 and P2.

b) Select any available lead and corresponding patient-electrode connection combination, and for at least 1 s apply a 60-Hz, 1-V p-p overload voltage between P1 and P2.

c) Verify that the 10-Hz signal is clearly visible 3 s after removal of the overload. If the device is provided with a manual reset mechanism, it may be activated immediately after removal of the overload.

© *2000 Association for the Advancement of Medical Instrumentation*

Single user license only. Copying, networking, and distribution prohibited.

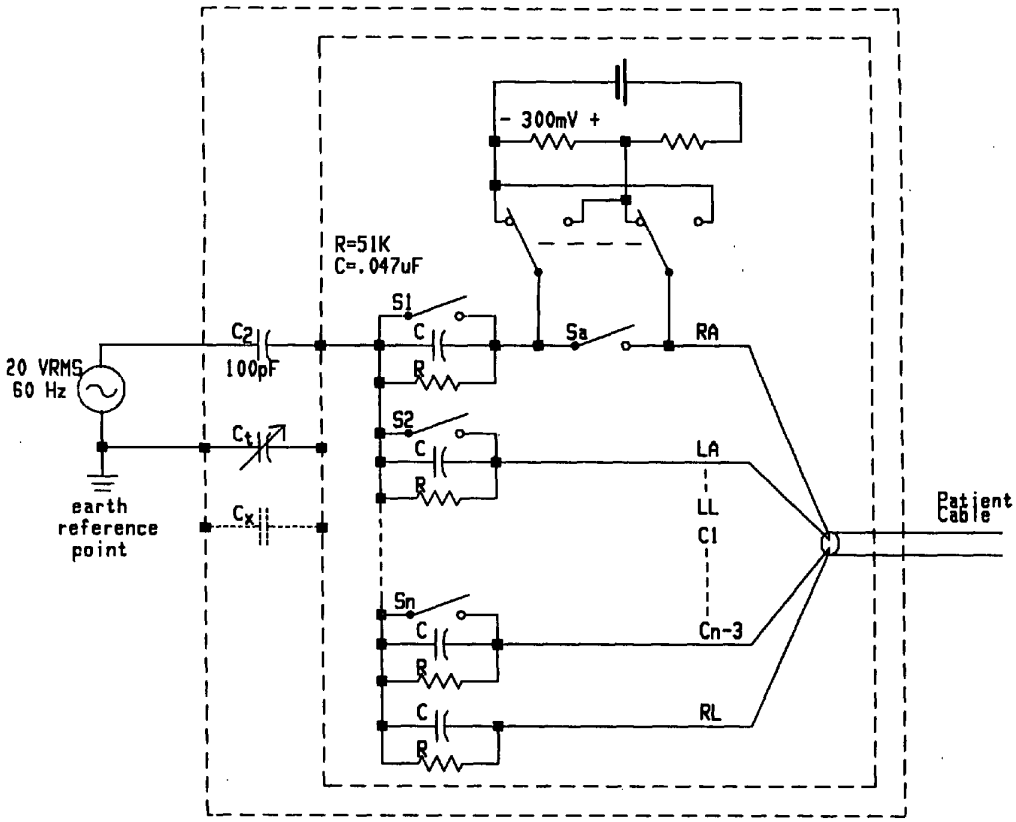

Figure 4—Internal noise an common mode rejection test circuit

In this test curcuit, R is 51 kilohms, C is 47 nF, and C_x and C_t simulate the patient's capacitance to ground. The test circuit includes shielding to reduce the pickup of unwanted extraneous signals—indicated in figure 4 by the *outer* dotted line; to be effective it should be connected to an earth reference point. The capacitance between the shield and the measuring circuit may adversely affect the results. For this reason, the internal guard shield is provided, enclosing the sensitive part of the circuit; the internal guard shield, indicated by the *inner* dotted line, is connected to a point in the test circuit representing the common mode test voltage.

Since the capacitance C_x between the internal and external shields influences both the source capacitance and the common mode voltage, this capacitance is increased by the trimmer capacitor C_t to 100 pF, equal to the generator coupling capacitor C_2·equivalent to 200 PF when the patient cable is not connected to the test circuit. (See also A.3.2.11.)

4.2.13.2 Baseline stability

Compliance with 3.2.13.2 can be determined by the following method:

a) Modify the test circuit of figure 3 by replacing the 100-ohm resistor with a 25-kilohm resistor between P3 and P4.

b) Connect the ECG device in the standard recording mode, with switch S2 open, switch S1 closed, and switch S3 in position A.

c) One minute after energizing the device, activate the reset function and determine the trace location 10

© *2000 Association for the Advancement of Medical Instrumentation*

Single user license only. Copying, networking, and distribution prohibited.

s later. This trace location will serve as the initial baseline value for subsequent calculations.

d) Measure the baseline drift of the output display to verify that it neither exceeds 1 mm in any subsequent 10-s period, nor exceeds 5 mm over any 2-minute period.

e) Conduct the test for each lead selector position and for at least as many leads as the number of display or recording channels available on the device.

f) Verify that the output trace returns to within 3 mm of baseline within 1 s after switching to any available lead.

4.2.14 Overload protection

4.2.14.1 AC Voltage

Compliance with 3.2.14.1 can be determined by the following method:

a) Connect the ECG device to the test circuit of figure 3 with switches S1 and S2 closed and switch S3 in position A.

b) Open S2 and connect a 1-V p-p, 60-Hz overload voltage between P5 and P3 and close S5.

c) Close switch S2 for 10 s.

d) Disconnect the overload voltage. If necessary, the reset mechanism of the device may be activated.

e) Repeat the above overload sequence at least twice more within a 5-minute period.

f) At the conclusion of the overload procedures, the ECG device must be able to meet all of the requirements of this standard.

4.2.14.2 Defibrillator overload protection

For this test, the manufacturer's recommended patient cable should be used.

NOTE—The test circuits shown in figures 5A and 5B for producing simulated defibrillator pulses must be constructed and used with great caution so as to avoid danger to test personnel. It may be necessary to connect two 50 ohm resistors in series to obtain a test load of 100 ohms. This must be done carefully since the node connection of the resistors is at or near one-half of full defibrillator voltage. There is also a possibility for chassis-connected parts of the ECG to become hot.

4.2.14.2.1 Recovery

a) Connect the electrocardiograph to the test circuit of figure 5A with the patient-electrode connections in each of the configurations of table 9, as appropriate for the lead set used. A defibrillator test load of 100 ohms, or its equivalent, must be used.

b) The ECG device is operated at the standard gain and normal frequency response, so that the 10 Hz test signal is clearly visible when switch S2 is opened.

c) Charge the capacitor to 5000 V, with switch S1 in position A and switch S2 closed. Discharge is accomplished by actuating S1 to position B for a period of 200 + 100 ms. The capacitor must be disconnected in order to remove residual voltages and to allow recovery to commence. The discharge test is applied at 20 s intervals in those cases where more than one discharge is indicated (see last column of table 9).

d) For those tests where the power ground of the ECG device is to be connected to P2, but no such power ground is available (e.g., in the case of battery-powered or doubly insulated equipment), connect P2 to the chassis of the device. If the chassis is a metal conductor, direct electrical connection can be made. If it is a nonconducting enclosure, metal foil or a conducting pad (e.g., a disposable

© *2000 Association for the Advancement of Medical Instrumentation*

Single user license only. Copying, networking, and distribution prohibited.

electrosurgical ground plate) can be used to produce electrical contact with the device enclosure.

e) Immediately after the last discharge for each lead combination, S2 is opened so that the 10 Hz test signal can be applied.

f) After 8 s, verify that the ECG device correctly displays the test signal at an amplitude at least 80 percent of the normal amplitude.

g) After this test, the device shall meet the requirements of 3.2.3 through 3.2.13 and the requirement of 3.2.15.

4.2.14.2.2 Reduction in energy delivered to the patient

a) Reconnect the electrocardiograph to the test circuit of figure 5A, discharge the test circuit, and measure the energy delivered to the defibrillator tester.

b) Remove the connections from the electrocardiograph to P1 and P2, and discharge the test circuit.

c) Verify that the energy delivered to the 100 ohm load in (a) is within 10 percent of that delivered in (b).

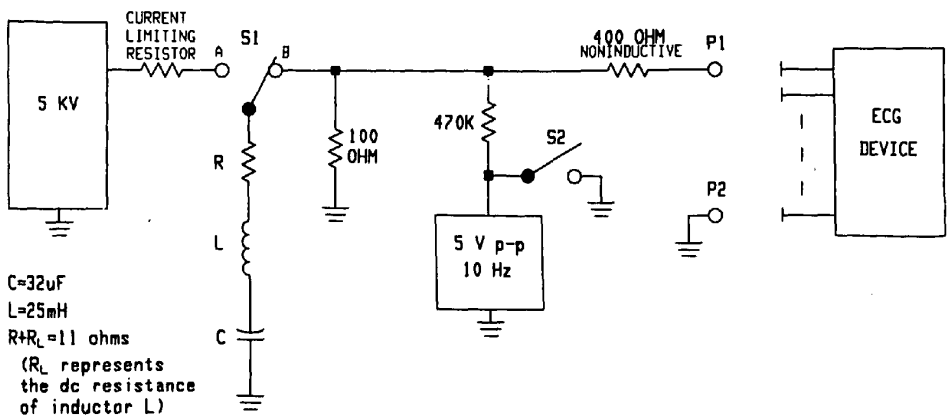

Figure 5A—Test circuit for defibrillator overload test (4.2.14.2.1 and 4.2.14.2.2)

The switch S1 must withstand peak currents of 60A in the closed position, and in the open position it must not break down for voltages up to 5000 V.

NOTES—

1) The values of R, C, and L may be varied so long as the waveform conforms to the limits specified in applicable document 2.1.2.

2) The manufacturer's recommended patient cable shall be used.

4.2.14.2.3 Operator safety

NOTE—The following test is not required for ac only electrocardiographs, since it is assumed that such electrocardiographs would always be connected to a power line when connected to the patient. Hence, the test is required for electrocardiographs which can be battery powered.

a) Turn the electrocardiograph off, and disconnect all cables which might otherwise provide a path from the electrocardiograph to ground (e.g., modem connections). Connect the electrocardiograph as shown in figure 5B, where the "device power ground or chassis" connection is made as described in 4.2.14.2.1(d).

© *2000 Association for the Advancement of Medical Instrumentation*

Single user license only. Copying, networking, and distribution prohibited.

b) Discharge the test circuit and verify that the magnitude of the voltage V1 in figure 5B is less than 1 volt.

4.2.14.3 Pacemaker pulse display capability

Compliance with 3.2.14.3 can be determined by the following method:

a) Connect the device to the test circuit of figure 6, using the connections shown in table 10 for each appropriate lead selection. The device shall be set at the standard recording conditions (gain, 10 mm/mV; time base, 25 mm/s) and at the standard frequency response (or a higher one, if recommended by the manufacturer for pacemaker pulse display).

b) Adjust the sinusoidal generator to produce a 40-Hz, 10-mm p-p signal at the output of the device. Measure this amplitude.

c) Adjust the pulse generator to add 250 ± 10-mV, 2 ± 0.2-ms pulses to the patient-electrode connections. These pulses shall have a frequency of 100 pulses per minute and a rise time of no greater than 100 µs.

d) Three millimeters or 120 ms after each pacemaker pulse, measure the position of the top of the sinusoidal signal. This position must not differ by more than 1 mm from that measured 2 mm before the start of the pulse. The peak-to-peak amplitude of the sinusoidal signal shall not differ by more than ± 10 percent from the original value measured in step (b).

e) Disconnect the sine wave generator (or reduce the output to 0.0 V). Adjust the pulse generator for a pulse width of 100 ± 10 ms, and adjust the output level to produce 20 mV, resulting in 2 mB at the input to the electrocardiograph. Reduce the pulse width to 0.5 ± 0.05 ms.

f) Verify that the presence of the pulse is clearly visible, with an amplitude of at least 2 mm, and that during a 10-s period the baseline shift is less than ± 10 mm.

g) Repeat (a) through (f) to test each appropriate lead selection.

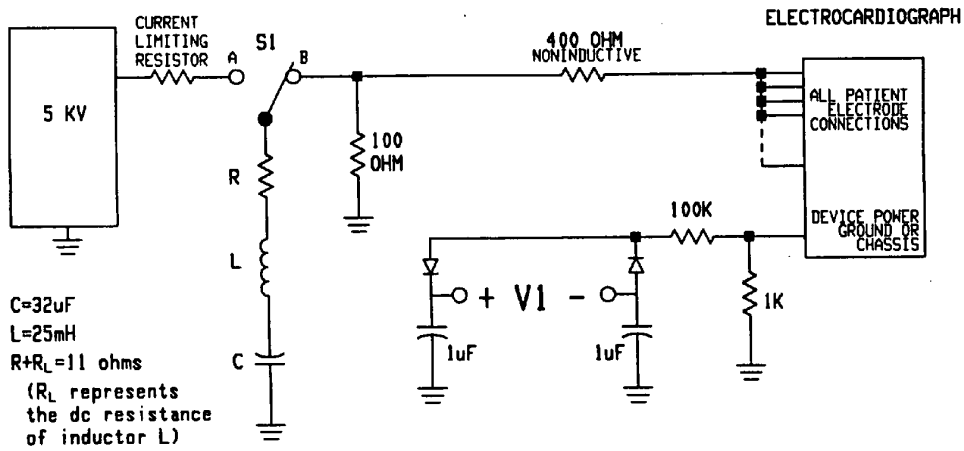

Figure 5B—Test circuit for operator safety test (4.2.14.2.3)

4.2.15 Risk current

The test methodology for determining risk current levels is provided in the American National Standard, *Safe current limits for electromedical apparatus* (applicable document 2.1.1).

4.2.16 Auxiliary output

© *2000 Association for the Advancement of Medical Instrumentation*

Single user license only. Copying, networking, and distribution prohibited.

4.2.16.1 If the device is provided with an auxiliary output, this output shall be short-circuited for at least 1 minute, with the device in the standard recording mode but the chart recorder not activated. Upon removal of the short-circuit, the device shall meet all of the requirements of this standard.

4.2.16.2 With the auxiliary device connected as specified by the manufacturer or simulated by a resistor equivalent to the drive capability specified for the auxiliary device, all risk currents shall be within the allowable limits specified for isolated patient connections in the American National Standard, *Safe current limits for electromedical apparatus* (Applicable document 2.1.1). The test methodology is provided in that standard.

© *2000 Association for the Advancement of Medical Instrumentation*

Single user license only. Copying, networking, and distribution prohibited.

Table 9—Lead combinations and number of defibrillator discharge tests				
	P1	**P2**	**Lead setting**	**# of test**
5 Electrode cables	LA	RA,LL,RL,V	I	1
	RA	LA,LL,RL,V	II	1
	LL	LA,RA,RL,V	III	1
	RL	LA,RA,LL,V	Standby	1
	V	LA,RA,LL,RL	V	1
	All patient electrode connections	Power ground or chassis	I	1
3 Electrode cables	LA	RA,RL	I	2
	RA	LA,RL	I	2
	RL	RA,LA	Standby	2
	All patient electrode connections	Power ground or chassis	I	1
2 Electrode cables	LA	RA	I	3
	All patient electrode connections	Power ground or chassis	I	1
10 Electrode cables	LA	all others	I,II,III	1
	RA	all others	I,II,III	1
	LL	all others	I,II,III	1
	RL	all others	Standby	1
	V1,V2,V3	all others	V1,V2,V3	1
	V4,V5,V6	all others	V4,V5,V6	1
	All patient electrode connections	Power ground or chassis	I	1
Vector cables	E,C	all others	X,Y,Z	1
	M,H	all others	X,Y,Z	1
	F	all others	X,Y,Z	1
	I	all others	X,Y,Z	1
	A	all others	X,Y,Z	1
	RL	all others	X,Y,Z	1
NOTE—Wait at least 15 minutes before repeating the test sequence, to prevent excessive temperature rise in clamping resistors. *CAUTION: Test personnel must take care to avoid injury from the high voltages and currents generated by these tests.*				

5 Definitions

For the purposes of this standard, the following definitions apply:

aspect ratio: For a display, the ratio of the vertical sensitivity, in mm/mV, to the horizontal sensitivity, in mm/s.

auxiliary output: An accessible connector or terminal providing electrical connection to the circuits of the device for the purpose of displaying, amplifying, or processing the ECG signal.

© *2000 Association for the Advancement of Medical Instrumentation*

Single user license only. Copying, networking, and distribution prohibited.

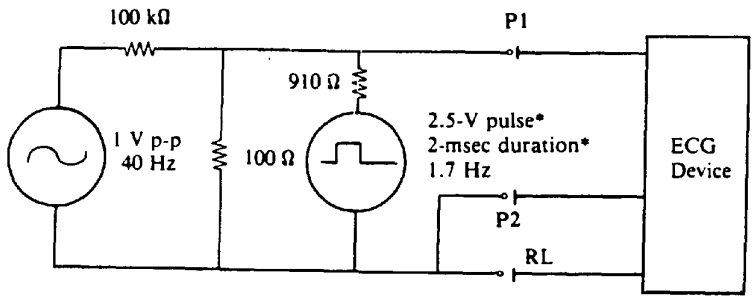

Figure 6—Pacemaker overload test curcuit

NOTE—For the pacemaker pulse display test, the pulse amplitude and duration are adjusted as per 4.2.14.3e.

band-limited response: A signal or amplifier response limited to a range (band) of frequencies.

buffer amplifier: An amplifier that has an output voltage equal to its input voltage to a very high degree of accuracy. Its characteristics usually include a very high input impedance so as to minimize noise and errors due to skin-electrode impedance; its output impedance is usually very low.

central terminal according to Wilson (CT): The terminal at the average potential of the R (RA), L (LA), and F (LL) potentials.

channel: That portion of the recording system comprising the proportionate width of the recording medium and the associated amplifier for one lead.

common mode rejection: The ability of a differential amplifier to reject common mode voltage.

common mode voltage: An undesired voltage of identical amplitude and phase applied to both inputs of a differential amplifier.

diagnostic electrocardiographic (ECG) device: An electrocardiographic recording and/or display device intended for obtaining a set of conventional or orthogonal electrocardiographic signatures that accurately represent both the detailed waveforms in each cardiac cycle and the beat-to-beat variability in order to determine cardiac rhythm. Such devices typically have wider bandwidths and smaller reproduction errors than cardiac monitors.

direct writer: A device that produces a visible, permanent record of the ECG.

double insulation: Insulation consisting of two independent electrically insulating systems: (a) an insulating system necessary for proper functioning of equipment and for basic operator protection from shock; and (b) a separate insulating system that protects the operator from shock, should failure of functional insulation occur.

Frank leads: The vectorcardiographic orthogonal X, Y, and Z signals obtained by summing seven electrode voltages in a manner first proposed by Frank (1956) (see Annex C, Bibliography).

hysteresis: The inability of a direct writer's output trace to attain the same position for the same input voltage if that position is approached from one side or the other.

input circuit: A circuit consisting of, for example, an amplifier input, weighting networks, protection networks, high-frequency filters, and patient cables.

input impedance: The voltage-to-current ratio measured at any frequency when applied to the differential inputs of an amplifier.

© *2000 Association for the Advancement of Medical Instrumentation*

Single user license only. Copying, networking, and distribution prohibited.

isolated patient connection: An input circuit exhibiting source and sink current characteristics that comply with the risk current limits specified for isolated patient connections in the American National Standard, *Safe current limits for electromedical apparatus* (applicable document 2.1.1).

lead: A system of conducting wires used to detect body surface potentials.

lead electrode: An electrode fastened on a specific part of the body to detect, in combination with other electrodes, heart action potentials.

lead selector: A switch used to select certain leads.

leakage current: An undesired current, including both resistive and reactive currents, which flows through or across the insulators that separate electrical conductors at different potentials.

monitor: An ECG device used to acquire and/or display electrocardiographic signals with the primary purpose of continuous detection of cardiac rhythm. Although the device may display individual waveforms, morphological accuracy may be compromised in comparison to a diagnostic ECG device.

multichannel electrocardiograph: A diagnostic ECG device capable of simultaneous recording from several ECG leads, often combined with phonocardiography and pulse recording.

Table 10—Patient electrode connections for pacemaker pulse display test

Measuring lead	Patient electrode connection to P1	Patient electrode connection to P2
I, aVL	LA	All others
II, aVR	RA	All others
III, aVF	LL	All others
V	V	All others
Vi	Vi (where i = 1 to 6)	All others
X,Y,Z	A,M,F (LL)	All others

nonpermanent display: Any display which is not permanent, such as the display on an oscilloscope.

overshoot: The amount of overtravel of the ECG output trace beyond its final steady deflection when a step voltage is applied at the input leads.

patient-electrode connection: The conducting tip of a patient cable making contact with a lead electrode.

pediatric monitor: A monitor specifically designed to deal with ECG signals from newborn infants and children up to 8 years of age. Various ECG amplitudes and time durations have ranges which are different for newborns and infants, as compared to adults. These differences gradually disappear with age.

reference electrode: The reference point for differential amplifiers and/or the connection for an ac suppression amplifier. The reference electrode, which is not involved in ECG lead combinations, is usually the electrode attached to the right leg (RL).

referred-to-input (RTI): Term used to describe an output that has been expressed by specifying, independent of the system gain, the equivalent input signal. A 1-mV output signal RTI means a 10-mm or 5-mm output, depending on whether the gain of the ECG device or monitor was set at 10 mm/mV or 5 mm/mV, respectively.

rise time: As applied to an input or output step, the time required to go from 10 percent to 90 percent of the total change.

risk current: Any nontherapeutic current that may flow through the patient, medical staff, or bystander as a result of the use of electromedical apparatus.

© *2000 Association for the Advancement of Medical Instrumentation*

Single user license only. Copying, networking, and distribution prohibited.

sampled system: A system that represents a continuous input signal as a series of discrete values of amplitudes and/or times. The output may be a series of discrete values or a continuous signal derived from the discrete values. Sampled systems, often referred to as digital systems, are by definition nonlinear in their behavior.

sink current: The current that flows into a device or any part thereof when an external voltage is applied to it.

source current: The undesirable electrical current that flows from any part of an electromedical apparatus to any other part or to ground when no external voltages are applied.

time base: The units of the horizontal axis of the display, usually expressed as mm/s. The time base may differ from actual paper speed for devices which do not display the ECG signal in real time.

vectorcardiograph: An instrument or system that provides a multidimensional display of electrocardiographic signals. The most common form of display is a plot of one ECG signal along the vertical axis and a second ECG signal, simultaneously recorded, along the horizontal axis.

Annex A
(informative)

Rationale for the development and provisions of this standard

A.1 Introduction

An electrocardiographic (ECG) device is an instrument or system that senses the electrical activity of the heart, by means of electrodes applied to the surface of the patient's body, and provides a visible, measurable display of the ECG voltage sensed. This standard covers only those ECG devices intended for use in the accurate measurement of the ECG waveform for diagnostic purposes.

Most of the provisions of this standard are based largely on the fourth draft of a standard developed by the UBTL (University Biological Test Laboratories) Division of the University of Utah Research Institute, under contract with the U.S. Food and Drug Administration (FDA). The original standard and the UBTL/FDA fourth draft drew heavily upon the recommendations of the American Heart Association (AHA) Committee on Electrocardiography (Pipberger et al., 1975). This revision of the standard is based largely on the more recent AHA recommendations (Bailey et al., 1990).

This appendix provides the rationale for the standards development effort on diagnostic electrocardiographic devices, as well as the rationale for each of the specific provisions of the standard.

A.2 Need for the standard

In 1974, the U.S. Food and Drug Administration established classification panels to serve as advisory committees to the agency in determining how best to regulate devices intended for commercial distribution—that is, by general controls (Class I), performance standards (Class II), or premarket clearance (Class III). This action was taken in anticipation of the passage of the Medical Device Amendments to the U.S. Food, Drug and Cosmetic Act (enacted 28 May 1976).

Based on the preliminary recommendations of the Cardiovascular Device Classification Panel, the U.S. Food and Drug Administration initiated a contract with UBTL to conduct a literature review and "Phase I" study and to develop what was anticipated to be a regulatory standard for electrocardiographic devices. The results of this study were published in a 1975 report (Schoenberg et al., 1975), which documented the potential risks associated with electrocardiographic devices. The first draft of a standard for ECG devices was also published in 1975 and reflected UBTL's initial recommendations for addressing these potential risks through the establishment of device safety and performance criteria.

© *2000 Association for the Advancement of Medical Instrumentation*

Single user license only. Copying, networking, and distribution prohibited.

Ensuing drafts of the standard, prepared under the continuing FDA contract, reflected modifications based on comments received as a result of public circulation of the standard and during public review sessions sponsored by UBTL. The fourth and final draft standard prepared under the contract was published in January 1977 (Schoenberg et al., 1977). As a result of a new FDA standards policy, under which primary emphasis was to be placed on the voluntary sector for the development of needed standards, the Association for the Advancement of Medical Instrumentation (AAMI) was requested in the fall of 1978 to initiate development of a voluntary standard for electrocardiographic devices, based on the fourth draft of the UBTL/FDA standard. In May of 1979, this task was formally accepted by the AAMI ECG Committee.

In the 9 March 1979 *Federal Register*, the U.S. Food and Drug Administration proposed regulations that would classify electrocardiographic devices in the Class II regulatory category (performance standards). This proposed regulation was based on the final recommendations of the FDA's Cardiovascular Device, Anesthesiology Device, and General and Plastic Surgery Device Classification Panels. The following excerpt from the proposed rule summarizes the basis for the Panels' recommendations:

> The Panels recommend that establishing a performance standard for this device be a high priority...that electrocardiographs be classified into Class II because this electrically powered device is neither life-supporting nor life-sustaining, but is potentially hazardous to life or health even when properly used. If the device is inadequate for accurate and precise measurement of the electrical activity of the heart, the resulting misdiagnosis could have a significant negative effect on the patient's health. This device is attached to the body through ECG electrodes and is used in a clinical environment where excessive leakage current can be a serious hazard. Thus the electrical characteristics of this device, e.g., electrical leakage current, need to meet certain requirements. Performance characteristics, including accuracy, reproducibility, and any limitations on the device's measurement of the electrical activity of the heart, should be made known to the user through special labeling. The device is used with other devices in a system that may be hazardous if not satisfactorily assembled, used, and maintained. The Panels believe that general controls alone would not provide sufficient control over the performance and electrical characteristics of the device.

In undertaking the development of a voluntary standard, the AAMI ECG Committee considered the need for the standard to be well established, given the above recommendation, the potential risks documented in detail by the UBTL reports, the recommendations of the AHA's Committee on Electrocardiography, and the relevant medical literature (cited where appropriate in section A.3 of this annex).

With respect to device efficacy, this standard attempts primari-ly to address the clinical risk associated with misdiagnosis of a patient's condition due to faulty measurement and display of electrocardiographic data. This is accomplished by performance requirements for such parameters as display accuracy in amplitude and time, allowable noise, linearity, calibration accuracy, and controls and markings necessary to minimize operator error. Safety considerations are addressed through limits on allowable risk currents, requirements for input circuit protection, and the like. The specific rationale for each of the safety and performance requirements is provided in section A.3 below.

Criteria for monitoring-type ECG devices, "Type II" devices in the UBTL/FDA fourth draft standard, are not covered in this standard. Instead, requirements for these devices were extracted from the UBTL/FDA fourth draft and incorporated into the ANSI/AAMI standard, *Cardiac monitors, heart rate meters and alarms*. Vectorcardiographs were also excluded from the scope of this standard. In its original form, the standard considered electrocardiographs and vectorcardiographs together. Until a few years ago, there was reason to believe that the use of vectorcardiographs would increase rapidly, but this has not occurred; vectorcardiographs remain in use at only a few medical centers. In view of this relatively limited level of use, and because vectorcardiographs may incorporate permanent or nonpermanent displays of loops, necessitating special considerations, the committee decided that it was appropriate to exclude these devices

© *2000 Association for the Advancement of Medical Instrumentation*

Single user license only. Copying, networking, and distribution prohibited.

from the scope of this standard. In addition, the committee recommended to the U.S. Food and Drug Administration that the priority for a vectorcardiograph standard be reduced.

Substantive changes from the original standard appear in this revision. In 1990, the American Heart Association published a new report, updating their recommendations of 1975. The subcommittee carefully considered these recommendations in developing this revision of the AAMI standard. The changes in this revision primarily affect frequency response requirements, direct currents in patient-electrode connections, system noise, and defibrillator overload protection.

Frequency response requirements have been changed for a number of reasons, including advances in digital technology, the increasing use of automated analysis systems, and the recognition that special population groups, such as infants, have ECG characteristics that demand recording systems with higher integrity. In one sense, frequency response requirements have been relaxed, as in the response to low frequencies, and in another sense, they have been made more stringent, as in the response to high frequencies. Allowable direct currents in sensing patient-electrode connections have been reduced while currents through the indifferent patient-electrode connection (right leg lead) are allowed to increase in recognition of the noise reduction benefit that may result. Allowable system noise has been reduced to 30 μV, again responding to advances in technology and the sensitivity of automated analysis systems to measurement errors in the presence of noise. A more comprehensive view of defibrillator overload now takes into account the three separate issues of the recovery of the electrocardiograph, reduction in defibrillator energy delivered to the patient that may occur because of the shunting action of the electrocardiograph, and operator safety.

The Electrocardiograph Subcommittee believes that these changes significantly improve and appropriately update the standard so as to have a positive effect on the quality of diagnostic electrocardiographic devices.

A.3 Rationale for the specific provisions of this standard

This section contains the rationale for each of the requirements of section 3. The paragraph numbers below correspond (except for the letter prefix) to those of section 3.

A.3.1 Device labeling

The requirements of 3.1 supplement those mandated for all medical devices by federal labeling regulations (*Code of Federal Regulations*, Title 21, Chapter 1, Subchapter H, Part 801). The additional labeling requirements provided by this standard address specialized information needed by the device user to operate diagnostic ECG devices safely and effectively.

A.3.1.1 Device markings

The requirements of 3.1.1.1 through 3.1.1.4 are intended to ensure that sufficient information is provided for device identification and traceability, that controls and switches are adequately labeled, and that the shock hazard to maintenance personnel is minimized. The requirements for coding patient-electrode connections (3.1.1.5) are intended to promote uniformity in the identification of electrode connections and leads and thereby facilitate the proper use of the electrocardiographic recording system. The coding system specified is that recommended by the American Heart Association. The committee considered designating the optional use of the coding system recommended by the International Electrotechnical Commission (IEC). However, it was the consensus of the committee that it was important to ensure uniform coding in the United States so that confusion in electrode placement could be avoided. For general information, table A.1 shows both the AHA electrode coding system (specified in this standard) and the IEC coding system.

A.3.1.2 Operator's manual

Certain minimum information must be included in the operator's manual supplied with the device, in order to ensure that the user will be thoroughly familiar with the capabilities and functions of the device.

A.3.1.2.1 Disclosure of cautionary information/ performance characteristics

© *2000 Association for the Advancement of Medical Instrumentation*

Single user license only. Copying, networking, and distribution prohibited.

a) Cautionary information. For operator and patient safety, cautionary information concerning potential hazards must be provided. It is also important that the device user be informed if electromagnetic interference and/or power overload will damage the device, so that appropriate precautions can be taken. A performance requirement for protection against electromagnetic interference caused by electrosurgical instruments was deemed highly desirable—particularly in the case of devices intended for use in the operating room. However, there was insufficient information available, at the time this standard was developed, to define a test procedure that would adequately simulate electrosurgical overload. Therefore, the committee chose to develop a labeling requirement that would help ensure, at least, that information concerning electrosurgical protection would be made available to the device user.

b) Battery-powered devices. Information concerning device operating time and battery charge time must be provided so that the user can effectively operate the device and rely on its performance.

c) Accuracy of input signal reproduction. Information concerning the method used to establish overall system error and frequency response enables the user to assess adequately device performance. Performance requirements (3.2.7.1 and 3.2.7.2) have been developed to accommodate both conventional linear systems and sampled systems. The user should know which performance requirements the instrument is designed to meet.

d) Electrode polarization. The electrocardiograph itself may be properly designed so as to recover rapidly after being subjected to overload. However, an electrocardiograph is used with leads and electrodes, and in practice an overload such as produced by a defibrillator will appear at electrode-to-skin interfaces, causing current to flow through lead wires and electrodes. Some types of electrodes of dissimilar materials may become highly polarized, and recovery of the system as a whole may thus be compromised. The user should be made aware of this possibility.

© *2000 Association for the Advancement of Medical Instrumentation*

Single user license only. Copying, networking, and distribution prohibited.

Table A.1—Electrocardiographic lead definitions and color code

System	Code1) Patient electrode connection identifier	Color code	Code 2) Patient electrode connection Identifier	Color code	Position on body surface
Conven-tional	R	Red	RA	White	Right arm
	L	Yellow	LA	Black	Left arm
	F	Green	LL	Red	Left leg
	C	White	V	Brown	Single movable chest electrodes
	C1	White/red	V1	Brown/red	4th intercostal (IC) space at right border of sternum
	C2	White/yellow	V2	Brown/yellow	4th intercostal (IC) space at right border of sternum
	C3	White/green	V3	Brown/green	Midway between C2 and C4
	C4	White/brown	V4	Brown/blue	5th IC space on left midclavicular line
	C5	White/black	V5	Brown/orange	Left anterior axillary line at the horizontal level of C4
	C6	White/violet	V6	Brown/violet	Left midaxillary line at the horizontal level of C4
	N	Black	RL	Green	Right leg
Frank vector	I	Light blue/red	I	Orange/red	At the right midaxillary line3)
	E	Light blue/yellow	E	Orange/yellow	At the front midline3)
	C	Light blue/green	C	Orange/green	Between front midline and left midaxillary line at an angle of 45 degrees3)
	A	Light blue/brown	A	Orange/brown	At the left midaxillar line3)
	M	Light blue/black	M	Orange/black	At the back midline
	H	Light blue/violet	H	Orange/violet	On the back of the neck or on the forehead
	F	Green	F	Red	On the left leg

1)Color code 1 is that commonly used in Europe and recommended by the International Electrotechnical commission.
2)Color code 2 is that commonly used in the U.S.A. and recommended by the American Heart Association

© *2000 Association for the Advancement of Medical Instrumentation*

A.3.1.2.2 Applications notes

Disclosure of the operational procedures, input conditions, and recommended electrodes helps ensure that the device and electrodes are properly used and that a reasonably accurate and noise-free ECG signal will be obtained.

A.3.1.3 Service manual

The information specified in 3.1.3 enables hospital personnel to accomplish reasonable field repair. The standard requires that the service manual be provided upon request, rather than with each delivered unit, because not all hospitals have the inhouse capability for field repair.

A.3.2 Performance requirements

Diagnosis of cardiac problems from ECG tracings depends on the cardiologist's ability to measure signal amplitudes and time relationships, as well as waveform characteristics. These measurements, in turn, must be compared to characteristic values established for normal and abnormal conditions. Ideally, a diagnostic ECG device should exactly reproduce the differential voltages as a function of time, as sensed by two or more electrodes on the surface of the body. By physiological constraint, and by longstanding convention, the ECG signal is taken from well-defined anatomical positions on the body and has a known range of amplitude and time. The differential peak-to-peak voltage measured at the body surface electrodes normally ranges up to 3 mV and very rarely exceeds 10 mV.

The heart beats between 40 and 200 times per minute, so that except for arrhythmia analysis, the cardiologist obtains most information from time interval measurements below 2 s. A significant distortion of the transient QRS-T signal results unless the frequency response of the recording instrument extends beyond 100 Hz (Berson & Pipberger, 1966, 1967; Berson et al., 1977; Schwarzchild & Kissen, 1934). The rationale for the 1990 AHA recommendations of 150 Hz bandwidth was reviewed and endorsed by the Subcommittee. By longstanding convention, paper recording of the clinical diagnostic ECG is done with a resolution of 100 μV/mm in amplitude and 40 ms/mm on the time axis. Assuming the unaided eye can interpret to 1/2 mm, the limits of the measurement become 50 μV and 20 ms. If an optical enlarger with a 0.1-mm graticule is used to measure distances on the ECG recording, a precision of 4 ms can be obtained. In terms of the percentage accuracy of the instrument, it is necessary to relate the measured value to a nominal value.

If 100 percent is taken to be the total scale of ± 2.5 cm, the accuracy required for a 1/2-mm resolution corresponds to 2 percent. Considering the 1-mV standardization voltage, which results in an excursion of 10 mm at the standard gain setting, the 1/2 mm represents 5 percent. An accuracy to within ± 5 percent of 1 mV (or 50 μV RTI) is typically seen in well-adjusted machines. However, this ± 5 percent error does not take into account any additional error caused by electrode input impedance differences, electrode potential summation errors, and deviations of the standardization voltage from the true value of 1 mV. On this basis, it was decided that if these errors are included, a ± 10 percent worst-case error for input voltages of 0.5 to 5 mV was a reasonable maximum allowable error for accurate diagnosis. The derivation of this error limit is discussed in more detail in A.3.2.7.

A.3.2.1 Operating conditions

The ranges of line voltage, frequency, temperature, altitude, and humidity are specified broadly enough to allow testing of ECG devices in most laboratories without need for environmental test chambers. These ranges, however, do encompass the conditions likely to be encountered by the device in a hospital or clinical environment. Devices intended for use under extreme or uncontrolled environmental conditions, outside of a hospital or physician's office, are not covered by this standard.

The specified operating range of 104 to 127 V rms is based on the recommendations of ANSI C84.1a-1980,

© *2000 Association for the Advancement of Medical Instrumentation*

Single user license only. Copying, networking, and distribution prohibited.

Voltage ratings for electric power systems and equipment (60 Hz) (ANSI, 1980). The Emergency Care Research Institute (ECRI) report, "Development of Environmental Test Methods for Non-Implantable Medical Devices," provides survey data gathered in 1975 from 23 U.S. hospitals (ECRI, 1979). This ECRI report recommended an operating line voltage range of 105 to 130 V rms for instruments in "subclass B" — those that are directly involved in patient care but are not life-sustaining. Nevertheless, the ECRI survey data revealed no voltages below 104 V or above 129 V rms, and 127 V rms was exceeded only 0.01 percent of the time. It was the consensus of the committee that the ECRI survey data essentially verified the voltage range specified by ANSI C84.1a-1980 as appropriate for a standard addressing minimum performance requirements for diagnostic electrocardiographs. In those relatively rare instances and locations of higher or lower line voltages, it may be necessary for the device user to choose an instrument that is designed to withstand voltages greater than 127 V rms or that can be operated at line voltages below 104 V rms.

A.3.2.2 Lead definition

The lead definitions specified in this standard are based on the recommendations of the American Heart Association.

A.3.2.3 Input dynamic range

The specified ± 5-mV differential signal is a minimum requirement, in that some abnormal ECGs (particularly in pediatric patients) may exceed this value. The AHA recommendation of a 10-mV p-p signal is a very similar requirement, except that it would mandate a third gain or a zero offset capability. The draft IEC standard requires a ± 5-mV capability (IEC, 1978), as well as the capability for baseline adjustment of at least 40 percent of the effective recording width unless the recording width is 50 mm or greater. The AAMI committee recommends that ECG devices have the capability of displaying a 10-mV p-p signal, with provision for a baseline shift. Data regarding QRS amplitudes for precordial leads were provided to the committee from two different (unpublished) sources, one of which reported amplitudes of up to 5.3 mV and 7.6 mV for R and S waves, respectively, from a study of about 1900 adult ECG records. The second source indicated that it is not unusual for recording amplitudes of about 10 mV to occur, particularly in lead V4, in babies with ventricular septal defects.

The response capability of 320 mV/s is unchanged from the original standard since the revised high frequency response of 150 Hz is coupled with lower amplitudes. This limitation was also recognized in the AHA recommendations of 1975 since their recommended frequency response test requires only a 5 mm p-p signal response at 100 Hz, which translates into a maximum rate of change of 1570 mm/s. It has been shown that variation during the QRS complex can reach 400 mV/s in a small percentage of cases (Schoenberg et al., 1975; Berson and Pipberger, 1978). The increased frequency response since the 1982 standard (100 to 150 Hz) is associated with amplitudes considerably below 0.5 mV, which makes it unlikely that higher rates of change will be experienced.

Satisfactory operation under conditions of substantial differential dc offset voltages is essential. The standard originally required that the device withstand dc offset voltages of ± 200 mV, but this was later revised to ± 300 mV to provide a greater margin of effective operation, particularly after overload. Additionally, the IEC draft standard for electrocardiographs had recommended a dc offset voltage requirement of ± 300 mV, and the AAMI committee considered it desirable to harmonize national and international standards insofar as possible.

A.3.2.4 Gain control, accuracy, and stability

The required gain settings of 10 mm/mV and 5 mm/mV reflect a convention that has been established for many years. The third required gain setting of 20 mm/mV conforms to both IEC and AHA recommendations. It should be noted that a channel width of 5 cm is needed for conformance with the ± 5-mV dynamic range requirement; if the display is narrower, a lower gain setting (e.g., 2.5 mm/mV) must be provided. The choice is left to the manufacturer and to the user. Gain accuracy of 5 percent must be

© *2000 Association for the Advancement of Medical Instrumentation*

Single user license only. Copying, networking, and distribution prohibited.

assessed by using an input signal with an accuracy significantly greater than 5 percent.

Continuous gain control, although not desirable for most diagnostic ECG devices, is permitted because many ECG devices also record other physiological signals, such as phonocardiograms, which may require a variable gain. Automatic gain control must, however, have override capability; otherwise, functional testing of the device becomes very difficult. The total allowable gain change is specified at ten times the allowable gain change rate per minute.

The gain stability of an electrocardiograph is important in minimizing indicated amplitude changes in the ECG signal which do not result from physiologic changes. Testing for gain stability over a time period of 1 to 60 minutes assures that the device functions well in this regard. A total change of at most ± 3 percent over 60 minutes is both technologically feasible and clinically acceptable.

A.3.2.5 Time base selection and accuracy

The accuracy of the time base is important in establishing many diagnostic parameters related to time, such as P-R and Q-T intervals and QRS duration. A time base error of at most ± 5 percent is intended to limit the transport motor and paper slip to a value that would not create more than a ± 10-ms error for short-interval measurements such as QRS duration. (This represents an error of less than 1/2 mm at the 50-mm/s time base.) A more accurate transport would be desirable; however, a smaller maximum error would not only be difficult to measure, but also very difficult to maintain, given the variation in line frequency and environmental effects on the recording medium and stylus friction.

A.3.2.6 Output display

A.3.2.6.1 Input signals/A.3.2.6.2 Channel width

A minimum recording width of 40 mm conforms with IEC recommendations and accommodates the apparent preference of many users for a narrower format than the 50-mm width recommended by the AHA. The full ± 5-mV range cannot be accommodated by a 40-mm width, however, unless the gain can be reduced to less than 5 mm/mV.

A.3.2.6.3 Trace width and visibility

The maximum allowed trace width was originally less than the 1-mm width now specified in the standard. The committee decided, however, that it was not feasible to specify a narrower trace width as a minimum requirement. In any event, most permanent displays now provide a narrower trace width as an option, enabling device users to choose the width best suited to their needs. The measurement method described in section 4 and figure 2 minimizes errors resulting from a wide trace width. An electrocardiographer interested in maximum measurement accuracy should consider this the preferred technique. The requirement for a visible trace has been specified in terms of input signal rates and gain. The test method allows the visibility of the trace to be verified for input rates of change up to 320 mV/s, which is adequate more than 90 percent of the time. This rate of change corresponds to a writing rate of 1600 mm/s, at a gain of 5 mm/mV, for real-time writing devices. For those ECG devices that store data for subsequent write-out at slower rates, writing rates may be considerably less than 1600 mm/s.

A.3.2.6.4 Rectangular coordinates/alignment of writing points

A rectangular coordinate display has been traditional in electrocardiography, and it is important that measurements of time and amplitude not be confounded because of departure from proper alignment along each axis. A 10-ms maximum misalignment is not only technologically feasible but also clinically acceptable.

A.3.2.6.5 Time and amplitude rulings

Although ECG recording paper is a disposable item, not generally supplied with the ECG device, its

© *2000 Association for the Advancement of Medical Instrumentation*

Single user license only. Copying, networking, and distribution prohibited.

accuracy in the time and amplitude dimensions, as well as its ability to move at an accurate, uniform rate, are of considerable importance to high-fidelity ECG recording. One typical ECG device manufacturer's purchase specifications for preruled ECG paper specify allowable dimensional errors of ± 1 percent for 5-mm squares, ± 2.5 percent for 1-mm markings, and ± 0.6 percent for 40-mm squares. These specifications must be met at 50 percent humidity. A variation in humidity from 50 to 90 percent will produce an expansion of paper fibers in the radial direction, causing an additional 1 percent change in the direction of paper perpendicular to the main orientation of fibers. The requirement of 3.2.6.5, which specifies a tolerance of roughly ± 2 percent, takes the humidity factor and measurement error into account.

A.3.2.6.6 Time and event markers

Time interval measurements are important in establishing diagnoses. The accuracy with which such measurements are made is better assured when accurate time markers are present. The 2 percent time marker generation accuracy requirement is reasonable and consistent with the need for a time base accuracy of ± 5 percent. Direct electrical measurement of time marker generation accuracy is necessary, rather than calculations based on the ECG graphical output, so that paper speed/slip effects will not be part of the measurement method.

A.3.2.6.7 Reduced performance modes

Electrocardiographs have often been designed so as to allow users to operate them in modes which provide improved insensitivity to noise. Some such designs accomplish this at the expense of compromising the performance of the electrocardiograph in other ways, usually with respect to frequency response. If an electrocardiograph provides the operator with this capability and performance is indeed reduced, the user should be reminded of this by having an appropriate indication of reduced performance be clearly visible on the recording medium.

A.3.2.7 Accuracy of input signal reproduction

In arriving at the total error of the ECG recording system, the potential errors from several sources are combined. A simple error analysis, related to the reproduction of amplitude, is provided by:

$$S_o = K(1 + e_k + e_h + e_f)\,|V_D(1 + e_n + e_r)|$$

where

e_k = the fractional error in gain and nonlinearity of the amplifier;

e_h = the error due to hysteresis of the output display;

e_f = the error due to linear frequency distortion of the system;

e_n = the error due to system noise;

e_r =the error due to inaccurate summation of electrode voltages; (e.g., the Wilson central terminal voltage).

Thus, the total percent error is:

$$E = 100(S_o - S)/S = |(1 + e_k + e_h + e_f)(1 + e_n + e_r) - 1|$$

$$E = (e_k + e_h + e_n + e_r + e_f)100.$$

NOTE—In the last equation, second-order terms have been dropped.

The overall error, then, if all individual errors add up in the same direction, is the sum of the gain error, the hysteresis error, the noise error, the error due to incorrect summation of the central terminal or reference voltages, and the error due to inadequate frequency response. If this error is to remain within the overall

© *2000 Association for the Advancement of Medical Instrumentation*

Single user license only. Copying, networking, and distribution prohibited.

error band of ± 5 percent, a fairly accurate instrument is required. For example, a ± 2 percent error each for e_r and e_n, a combined error for linearity, gain, and hysteresis of ± 5 percent, and only a ± 1 percent error due to frequency response fluctuation would result in a total error of ± 10 percent, in the worst case, in the signal deviation from the correct input. The rms error would be about 6 percent.

The major allowable errors specified in this standard are those resulting from:

DC offset	5 percent;
Gain inaccuracy	5 percent;
Noise	1 percent;
Hysteresis	1 percent;
Error of rulings	2 percent;
Lead weighting	5 percent;
Frequency response fluctuations	1 percent.

If errors reach these maximums, the total rms error equals 81 plus f squared, and the instrument could not meet the 5 percent overall error requirement. Thus, the instrument must have errors below these maximum values for some parameters. This requirement is difficult, but feasible.

A.3.2.7.1 Overall system error

In testing overall system error, it is desirable to separate the amplitude degradation caused by the system's frequency response characteristics from deviations in linearity which might occur in any case. Thus, rate of change has been limited to 125 mV/s for purposes of this test. The sinusoidal test specified in 4.2.7.1 is performed at a frequency low enough to prevent the results from being confounded with the effects of frequency response characteristics. In addition, the frequency is low enough to allow testing of sampled systems.

To account for an allowable noise of 30 µV p-p, 40 µV error has been specified. This is consistent with 25 µV recommended by the American Heart Association added to one-half of the allowable peak to peak noise voltage.

A.3.2.7.2 Frequency and impulse response

The 1983 standard specified 100 Hz for the high frequency response, based primarily upon the 1975 recommendations of the American Heart Association and partly upon the limitations of frequency response of direct writers. Since then, a new report of the American Heart Association (1990) has been published which recommends 125 Hz and 150 Hz response for adult and pediatric electrocardiographs, respectively. These recommendations are based upon published studies indicating that errors greater than 50 µV can occur in over 10 percent of recordings using 100 Hz bandwidth, and upon the increased use of automated systems which resolve amplitudes in the neighborhood of 30 µV. The Concerted Action Project of the European Communities in their project Common Standards for Quantitative Electrocardiography (CSE) recommends a definition that a QRS deflection is present if it has an amplitude greater than or equal to 20 µV and a duration greater than or equal to 6 ms. Their recommendation is based upon evaluation of nine computer programs. To be consistent with this level of resolution, electrocardiograph bandwidth must exceed 100 Hz. The limitations of direct writers are no longer applicable because of vastly improved technology. The AAMI standard includes pediatric ECG recording, therefore resulting in the requirement for 150 Hz bandwidth.

As noted in A.3.2.3, the present frequency response test of a 0.5-mV p-p signal at 100 Hz produces a maximum rate of change of 320 mV/s. ECG amplitudes reduce with increasing frequency at about 12 dB/octave, so that in the great majority of cases, components above 100 Hz would be below 0.5 mV amplitude. Thus, the committee judged that the 320 mV/s rate of change continues to be appropriate.

© *2000 Association for the Advancement of Medical Instrumentation*

Single user license only. Copying, networking, and distribution prohibited.

That such a response is barely adequate can be seen in the findings of Hurzeler and associates (1976). Their study showed a distribution of peak-to-peak amplitudes of the endocardial QRS over the range of 2 to 38 mV, with a mean value of 12 mV. The corresponding maximum rates of change have a range of 500 to 8000 mV/s, with a mean value of 2900 mV/s. The maximum velocity usually occurs during the R-S segment of the QRS. Since the normal body surface QRS complex has an amplitude in the range of 1 mV, it can be estimated that the body surface ECG will have rates of change approximately 1/12 of those recorded endocardially. Thus, the calculated distribution of body surface R-S rates of change would have a mean of 241 mV/s and a range of 42 to 677 mV/s. Of the 133 patients studied by Hurzeler, 121 (91 percent) would probably have R-S rates of change less than or equal to the 320-mV limit of this standard. Thus, for almost 10 percent of these patients, the required rates of change would permit some degradation of signal accuracy.

Method E is specified to test the device for instrument-induced potentials that may occur immediately following a high amplitude QRS. The test impulse of 0.3 mV·s is high, but is consistent with observations in a small fraction of ECGs. The limits on amplitude and slopes following the impulse are consistent with both AHA recommendations and clinically relevant needs, allowing reasonable flexibility for system designers. The step response specification in the previous version of this standard is essentially replaced by these impulse response requirements.

Sinusoidal testing is reasonable and well accepted for linear systems, but for digital or other nonlinear systems, sinusoidal testing is often inappropriate. Therefore, a triangular waveform test is included in this standard. The triangular wave shape more closely approximates QRS waveforms, as opposed to sinusoids. The 20-ms base width of the test waveform corresponds with a worst-case R wave in infants. The rate of change is below 320 mV/s. The 10 percent allowable reduction in peak amplitude of the applied triangular signal is based on theoretical calculations and bench tests conducted by committee members to obtain comparability of performance with that of linear systems having 150-Hz bandwidths.

The American Heart Association recommends that diagnostic ECGs have a frequency response up to 150 Hz. This appears straightforward for conventional analog systems. For digital systems, the current and proposed AAMI standards require the instrument to respond to a triangular wave input signal, with a specification for the peak output amplitude of the 20 ms wide input signal to be attenuated by no more than 10 percent. If equal interval sampling at 500 Hz is used, this will not be possible to achieve without reducing the bandwidth of the analog portion of the system, thus violating the 150 Hz bandwidth requirement. On the other hand, if the allowable attenuation of the peak of the triangular wave is reduced to something like 7 percent instead of 10 percent, this would more closely approximate the 150 Hz bandwidth for the analog signal. Unfortunately, a sampling rate considerably higher than 500 Hz is required in this instance.

This problem has been discussed by several members of the Diagnostic ECG Subcommittee who agreed to resolve the issue temporarily by allowing 10 percent attenuation of the triangular signal. It was also agreed that members would work together to develop alternate strategies that could be incorporated into an amendment to the standard at a later date.

The 1975 AHA recommendations for 0.05 Hz low frequency response did not specify phase response as it was believed that phase nonlinearity in the region of 0.5 Hz would be so small as to be of no significance. It was not anticipated that the 0.05 Hz requirement would pose a design limitation for nonlinear systems. Furthermore, the use of digital systems and bidirectional filters are difficult to test using sinusoidal testing. The 1983 AAMI standard adopted a step response requirement which partially addressed this. An impulse response test may be more realistic, particularly for bidirectional filters, many of which cannot be easily tested by evaluating step response. Although both amplitude and phase linearity requirements are also possible, an impulse response requirement leads to a simpler test procedure. The 1990 AHA recommendations state that 0.05 Hz low frequency performance is adequate for conventional analog systems, but that this may be relaxed with appropriately designed nonlinear or digital systems. The

© *2000 Association for the Advancement of Medical Instrumentation*

Single user license only. Copying, networking, and distribution prohibited.

relaxation of low frequency amplitude performance to 0.67 Hz is based upon heart rate data in studies from the Framingham Heart Study and from Simonson, (Simonson, E., 1961 and Simonson et al., 1949) indicating that 44 beats/minute encompass more than 99 percent of adult heart rates with intraindividual RR interval variation less than 0.126 s. Thus, a lower bound of 40 beats/minute (0.67 Hz) exists for 99 percent of adults, 90 percent of the time. This is described also in the 1990 report of the AHA (Bailey et al., 1990).

Sampled systems, but not linear continuous systems, exhibit a modulating effect caused by asynchronism between sampling rate and cardiac rate. This may be displayed as a difference in QRS amplitudes from beat to beat, a phenomenon which is not physiologic but rather results from sampling of different parts of the QRS in the cardiac cycle.

Physiologic factors such as respiration can cause variation in amplitudes of successive cardiac cycles independent of QRS duration. The variation in amplitudes resulting from sampling and digitizing is an additional factor that becomes more noticeable as QRS duration becomes shorter. When beat-to-beat amplitude variation is observed, the electrocardiographer should use the largest amplitude for purposes of interpretation. This effect is most likely to occur for a small fraction of pediatric electrocardiograms and for pacemaker pulses and only occasionally for adult electrocardiograms.

The committee notes that the combined requirements for impulse response and frequency response may be difficult to achieve with a real-time system unless the low frequency amplitude response is extended below 0.67 Hz. If the ECG does not operate in real time, it is strongly recommended that the manufacturer disclose details regarding time delays.

A.3.2.7.3 Lead weighting factors

Weighting factors must be employed to obtain the proper voltages for both standard and Frank leads. Whether or not such weighting is effected by resistors, active components, or computing, the capability of ensuring a maximum error of ± 5 percent is well within the state of the art and compatible with an overall system error of ± 10 percent.

A.3.2.7.4 Hysteresis

Hysteresis is a phenomenon that occurs in most amplifying systems. It is usually more significant in systems having mechanical components. For ECG instruments, in which resolution of 0.5 mm is expected, the error caused by hysteresis must not exceed the resolution. Well designed instruments can achieve this level of performance.

A.3.2.8 Standardizing voltage

The standardizing voltage measures the ability of the system to produce a signal relative to a traceable standard. Although, ideally, the accuracy of the *total* ECG system should be measured, the standardizing voltage, as currently devised in most systems, only partially measures the system accuracy in that it does not generally include the input buffer circuits, nor does it indicate any deviation of the internal calibration signal from a true 1-mV signal. In fact, many ECG devices use a constant voltage injected at a convenient intermediate gain stage. The requirements of 3.2.8 are intended to ensure that the device user is provided with a reasonably accurate indication of the gain and frequency response characteristic. Absolute calibration by a known mV source is verified in 3.2.7 and 4.2.7. Permitting the use of an alternative, repetitive triangular waveform accommodates digital or other nonlinear technologies.

A.3.2.9 Input impedance

The input impedance requirement is dictated primarily by the skin-to-electrode impedance over the effective frequency range of the ECG signal. The skin impedance problem has been studied by a number of investigators (Almasi & Schmitt, 1970; Berson & Pipberger, 1968; Schmitt & Almasi, 1970; Spach et al., 1966) who have shown that the impedance decreases with frequency and with time after electrode

© *2000 Association for the Advancement of Medical Instrumentation*

Single user license only. Copying, networking, and distribution prohibited.

attachment. The method and location of attachment, type of electrode paste, and type of electrode all influence impedance. It is interesting to note that the commonly used suction electrode with paste produces the highest impedance, with a geometric mean value of 17.8 kilohms for the chest and 44 kilohms for leg attachment without skin preparation. The worst location is the outer forearm, with a 10-Hz geometric impedance of 49 kilohms (Almasi & Schmitt, 1970). Almasi and Schmitt concluded:

> If we are to use conventional ECG electrode preparations, we must provide measuring systems with sufficient input impedance so that practically all expected subjects will be measured without significant errors. We must, furthermore, provide automatic warning when appropriate limits of impedance are exceeded. Otherwise, we must knowingly accept the penalty of erroneous measurement in a chosen significant percentage of cases...By all ordinary criteria, we should certainly aim to lose not more than 1 percent of the patients to inaccurate recording. This leads to the hard fact that patients with impedance on the order of 200,000 ohms are really to be expected, and this, in turn, means that instrument input impedance, not simply resistance, should be at least 10-20 megohms. This is a value that can be met by very good and fairly expensive electronic practice, but one that is not easily met with ordinary vacuum tube or transistor amplifiers, especially when they are at the end of long shielded cables.

The American Heart Association recommends a 5-megohm differential input impedance. This is acceptable under conditions where the 10-Hz skin-to-electrode impedance is less than 50,000 ohms, when measured with a 10-µA or less current, for most of the expected population. This can only be guaranteed, however, by some skin preparation, such as slightly sanding or rubbing with alcohol the leg and arm attachments. In setting the requirement of this standard, the input impedance was chosen as the maximum consistent with current ECG device and electrode cable design.

The IEC's draft standard initially required a much lower input impedance; however, the requirements of the IEC and AAMI standards are now harmonized at a 5-megohm differential input impedance. The test method and the requirements are expressed in terms of a single-ended input impedance of 2.5 megohms at 10 Hz. The input impedance can be approximately one-half of this value at 100 Hz, since the patient cable capacitances tend to limit the input impedance at the higher frequencies. The test method simulates, by means of a 4.7-nF capacitor connected in parallel with a 0.62-megohm test resistor, the drop in skin-to-electrode impedance as frequency increases.

Another study by Schmitt and Almasi (1970) included 142 males and 76 females. It was found that 10-Hz impedances exceeded 140 kilohms in 5 percent of the males and exceeded 220 kilohms in 5 percent of the females. These values are for the sum of the skin-to-electrode impedances for two suction electrodes applied with Redux paste after gentle rubbing. The investigators noted that the data follow a logarithmic, not a simple linear Gaussian, distribution.

Berson and Pipberger (1968) studied 24 males with flat plate electrodes applied, in a manner similar to that described above, to three precordial sites. A similar distribution of impedances was found, but the values obtained were generally lower because skin-to-electrode impedances were computed for individual electrodes rather than for pairs. Impedances exceeding 74 kilohms at 10 Hz were found for 5 percent of the measurements. Pair-wise differences in impedance exceeding 84 kilohms were also found for 5 percent of the measurements.

With the input impedance specified in this standard, skin-to-electrode impedances of less than 50 kilohms in any one electrode should produce an error of less than 2 percent. For the worst-case situation, where all electrodes involved in the lead measurements have an impedance of 250 kilohms, the error will be 10 percent. Table A.2 indicates that 98 percent of the ECGs taken with the usual skin preparation will have skin-to-electrode impedance errors of less than 10 percent. Since impedance depends upon electrode area, these data should be similar for monitoring electrodes, which have areas comparable to those of small suction electrodes. In most nonshielded locations, skin-to-electrode impedances much above 100 kilohms

© *2000 Association for the Advancement of Medical Instrumentation*

Single user license only. Copying, networking, and distribution prohibited.

will probably cause excessive noise in the ECG recording and hence will probably force better application of the electrode.

Disposable electrodes, including plastic electrodes, are increasingly used as compared to plate and suction cup electrodes. However, it is unclear that impedances at the skin-electrode interface are routinely lower than with the older electrodes. Skin preparation remains an important factor and it is likely that this will continue to be the principal influence for offset potentials and impedances.

A.3.2.10 Direct currents in patient leads

The direct current of 0.2 μA that was specified in the first edition (1982) of this standard was a compromise figure set after considerable debate and study. ECG device manufacturers would have preferred that this figure be much higher (e.g., 0.5 or 1.0 μA) to allow greater flexibility in input circuitry design. The American Heart Association recommended the 1-μA value, which was somewhat higher by technology standards current at the time. However, this current level posed problems for disposable electrodes. UBTL tests (Schoenberg et al., 1979) showed that at 1-μA currents, most electrodes will polarize to above 100 mV within a few hours. Tests of four types of silver-silver chloride electrodes showed that, in two of the four types, a 0.5-μA current level will also cause polarization of greater than 100 mV. One type of electrode polarized to 100 mV within 15 minutes of the current application; a second type remained unaffected for 6 hours. Thus, 0.2 μA appeared to be a reasonable value. It was noted, however, that a 0.1-μA bias current limit was being recommended in the draft IEC standard for electrocardiographs.

During revision of the 1982 standard, the direct current limit has been reduced for amplifier inputs, and increased for other connections such as RL, relative to the original limits. It was recognized that whereas currents in inputs should be kept low to keep electrode offset voltages within the limits of the amplifier, the same constraint need not be imposed on the RL electrode. The 0.1 μA level for inputs is the same value as that recommended in the draft IEC standard for electrocardiographs noted above (IEC 62D[C0]6), and is the level required by the French standard NF C 74-305 (July 1988). For other connections, the 1 μA level is the value recommended by the American Heart Association, also noted previously.

A.3.2.11 Common mode rejection

There appears to be a wide variation in common mode rejection performance among present-day ECG devices. Testing done at UBTL (Schoenberg et al., 1977) showed that the AHA's 1967 recommendation of 1000:1 common mode rejection (Kossman et al., 1967) may be vastly surpassed (70,000:1) or not complied with (400:1). Seven of the nine devices tested by UBTL passed the common mode rejection test defined in the 1967 AHA recommendations. The isolated patient circuit and the driven right leg concept have introduced problems in defining and measuring common mode rejection.

© *2000 Association for the Advancement of Medical Instrumentation*

Single user license only. Copying, networking, and distribution prohibited.

Table A.2—Extreme expected values of impedance (1 electrode) for a typical population[1]			
Percentage of population excluded	**Forehead**	**Chest**	**Leg**
50.0	3.28	17.8	44.3
10.0	6.93	52.1	140.0
5.0	8.55	71.0	193.0
2.5	10.30	93.3	257.0
1.0	12.80	128.0	368.0
0.1	20.10	248.0	713.0

[1])All values in kilohms; frequency is 10 Hz. The table entries in columns two, three, and four represent values of impedance magnitude for one electrode that should be exceeded at the indicated body location by the percentage of the population shown in column one. The data are for 15-mm suctionelectrodes used with Sanborn Redux paste. Computations are based on the log-normal distribution model for the 20-subject sample. (From Almasi & Schmitt, 1970)

NOTE—Impedance for females are about 50 percent higher than those shown for males in the above table.

Basically, common mode rejection provides the ability to reject a signal that is applied to both sides of a differential amplifier. For high-impedance input to the amplifier, this generally requires very low currents and exactly matched impedances. With the high input impedance requirements and the protective circuitry at the front end, such a goal is hard to attain in practice. The common mode rejection ratio for isolated patient circuits, measured relative to power or chassis ground, is generally very high (exceeding 10,000:1 in most recorders measured by UBTL).

The circuit for common mode rejection testing described in this standard is based on IEC recommendations; a similar method is described in the 1975 AHA recommendations (Pipberger et al., 1975b). The allowable output common mode noise (3.2.11) was considered reasonable when the equivalent circuits are analyzed. The 100-pF capacitor and the right leg impedance of 51 kilohms, in parallel with a 47-nF capacitor at 60 Hz, form a voltage divider. The resulting common mode voltage would not be difficult to cope with, if a grounded right leg or equivalent is assumed. But the risk current for any electrode lead must not exceed 10 µA with 120 V at the 60 Hz applied (as per 3.2.3); this implies an equivalent impedance to ground of at least 12 megohms. The 12 megohm impedance in series with the equivalent impedance of 200 pF (C2 and Ct in parallel) forms a voltage divider which results in a common mode voltage somewhat less that 10 V rms when the patient cable and device are connected to the test circuit. Most currently available diagnostic ECG devices do use either a driven right leg or other circuits, such as current-limited ground right leg, to reduce the common mode voltage seen by the amplifier input stage. The test method of this standard simulates the effective common mode voltage of the patient and allows various types of compensating circuits to operate effectively.

The noise requirement under skin-to-electrode impedance imbalance is based on the fact that a great amount of variation can be expected between any two electrodes attached to the same patient (Almasi & Schmitt, 1970). Given a finite impedance to ground for any electrode, the common mode current will generate a differential signal if an imbalance of skin-to-electrode impedance exists. Imbalance resistance of 50 kilohms can typically be encountered (see A.3.2.9 and table A.2) and is consistent with the IEC recommendations.

Even though the common mode rejection tests are made with a 60-Hz sinusoidal signal, manufacturers and users of clinical ECG devices should recognize that what has been traditionally referred to as 60-Hz interference may, in fact, be the integrated effects of higher frequencies occurring at a 60- or 120-cycle repetition rate. This is because, as time passes, more nonlinear loads are being placed on the power system (e.g., fluorescent lights and motor controls). These systems can radically alter the character of the displacement current in the hospital environment, generating apparent 60-Hz interference in instruments

© *2000 Association for the Advancement of Medical Instrumentation*

Single user license only. Copying, networking, and distribution prohibited.

which may have close to infinite 60-Hz rejection when tested with a true sinusoidal source.

A.3.2.12 System noise

Noise in electrocardiographic records is one of the most persistent detriments to a clean diagnosable signal. This problem, however, can generally be traced to external interferences (EMI), patient movement (myographic signals), or poor technique in electrode application or routing of cables. Most manufacturers provide guidelines for correct techniques in measuring ECG. Shielded cables as well as high input impedance and common mode rejection alleviate some of the noise problems. The "driven right leg," which helps cancel the common mode noise from the signal sensed at the electrodes, further reduces the noise. In this standard, the maximum allowable noise was harmonized with the corresponding requirement in the draft IEC standard.

A.3.2.13 Baseline control and stability

A baseline control, although desirable, is best left as an option for those who prefer or need it, assuming that signals with 5-mV peaks from baseline can be visualized without baseline control. The reset function, on the other hand, must be provided because of the frequency with which overload conditions are encountered in everyday clinical ECG recording. How this reset function is accomplished is left to the manufacturer; it can be automatic or manual, a separate switch or part of the lead selector. The important feature of the reset mechanism is that it allow restoration of the ECG trace within about 3 seconds of an overload condition.

The American Heart Association recommended that baseline drift, after a 5-minute warm-up period, be less than 50 μV over a 45-minute recording period. It was the opinion of the AAMI committee, however, that since shorter warm-up and recording periods (1 to 2 minutes) are characteristic of most diagnostic ECG applications, this standard should specify maximum baseline drift rates for the 1- to 15-minute period after warm-up. The 10-μV/s requirement specified in this standard essentially allows less than a 50-μV (or 0.5-mm) drift in a typical 5-s recording period. Such a drift should not produce any misinterpretations of ECG records due to measurement errors. The total drift of 500 μV, over a 2-minute recording period, assures that the baseline will remain fairly close to the center of the recording range long enough to sequence through the different lead sets.

A.3.2.14 Overload protection

A.3.2.14.1 AC voltage

The recommendations of the draft IEC standard were adopted for purposes of this standard. The 1-V p-p differential signal represents a noise level approximately 100 times the maximum signal. The 1975 AHA recommendations suggest a 120-V rms, 60-Hz signal applied through a 100-pF capacitor to any input lead, with the apparent intent of assuring defibrillation protection (Pipberger et al., 1975). The AAMI committee opted to specify a separate test for defibrillator overload consistent with IEC requirements. The intent of the ac overload specification is to verify that the ECG device will not be permanently damaged if a large input signal is accidentally applied.

A.3.2.14.2 Defibrillator overload protection

Defibrillator overload protection is necessary for most ECG devices, since in the hospital environment any given ECG device might be used on patients potentially requiring defibrillation.

A.3.2.14.2.1 Recovery

A defibrillation-protected device must continue to function after exposure to the short-duration high voltages of a defibrillator discharge. The ECG device should be capable of recovering from the overload conditions within a few seconds after the defibrillator pulse, so as to give an indication of the presence or absence of the ECG and of the persistence of fibrillation.

© *2000 Association for the Advancement of Medical Instrumentation*

Single user license only. Copying, networking, and distribution prohibited.

The American National Standard, *Cardiac defibrillator devices*, specifies a maximum selectable deliverable energy in the range of 250 to 360 joules (AAMI, 1989). The energy and voltages that the ECG device sees as a result of a defibrillator discharge are dependent on the relative resistances of the human torso, the placement of the paddles relative to the ECG electrodes, the skin-to-electrode resistance, and the effective impedance of the ECG device. The equivalent circuit is shown in figure A.1, where the defibrillator is simulated by a capacitor (C) charged to voltage (V), and the stored energy (E) is given by $E = 1/2\ CV^2$.

For example, a capacitor of 32 µF charged to 5000 V will have a total stored energy of 400 J. This value has been proposed by the IEC as a worst-case value for purposes of defining a defibrillator overload circuit. Using a total series resistance of 11 ohms (as indicated in figure 5A) 360 J will be delivered into the test load, which corresponds to the maximum allowed by the AAMI defibrillator standard.

A.3.2.14.2.2 Reduced energy delivery

The human torso and defibrillator paddle/skin resistance, under high energy discharge, varies over a wide range, with a mean of 67 ohms and standard deviation of 36 ohms (hence m+SD = 103 ohms) in a study published by Kerber et al. The 100 ohm resistance specified in this standard fairly represents the worst-case voltage and power duration that the ECG device would see. The skin-to-electrode impedance (R_s) and the internal net impedance of the ECG device under defibrillator overload (R_i) are highly variable.

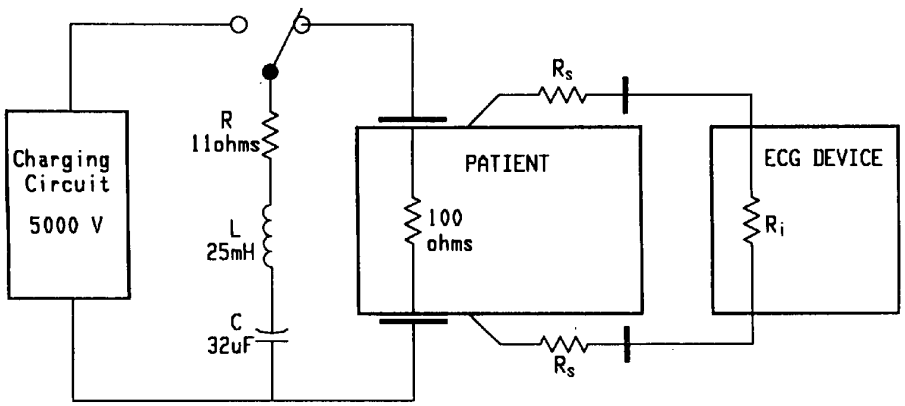

Figure A.1—Equivalent circiuts for defibrillator discharge

The electrocardiograph should not inadvertently shunt defibrillation currents from the patient. The result might be reduced efficacy of defibrillation, burning of the patient at the electrode contact sites, and reduced likelihood that the electrode could continue sensing the ECG. These problems are minimized by allowing the device to absorb no more than 10 percent of the energy intended for delivery to the patient.

A.3.2.14.2.3 Operator safety

The requirement of 3.2.14.2.3 is intended to limit the hazard that may exist to an operator who is in contact with an ECG device that is connected to a patient being defibrillated. The requirement and the test circuit of figure 5B are as in the IEC Draft Standard 62D(CO)17. The measurement circuit can be understood as a charge integrator since, for any ECG device approaching the 100 C limit, the voltage across R1 would be large relative to 1 volt.

For line-powered devices with intact chassis ground, this hazard is minimal or nonexistent. With a defective ground or no ground, the opportunity exists for accumulation of charge and subsequent shock to an operator. Battery-powered devices and line-powered devices with the power cord disconnected may be most vulnerable in this respect.

© *2000 Association for the Advancement of Medical Instrumentation*

Single user license only. Copying, networking, and distribution prohibited.

In animal tests conducted by Schoenberg, Booth, and Lyon (1979), ECG electrodes were placed 3 cm away from the defibrillator paddles. At an energy of 300 J and a peak defibrillator voltage of 6000 V, the peak voltage recorded in the ECG electrode cable was 1000 V. Extrapolating these data to 400 J and 5000 V peak at the defibrillator, peak voltage in the ECG electrode cable would be 1100 V.

The test method adopted in this standard sets R_S at 400 ohms, a very low value for skin-to-electrode impedance which puts a greater burden on the electrode, both in terms of ability to absorb power and of maximum voltage attained. Therefore, the test method of 4.2.14.2, utilizing 5000 V and 360 J, represents an overload that is several times more severe than would normally be encountered in actual practice and hence ensures that significant safety factors are built into the device.

A.3.2.14.3 Pacemaker pulse display capability

The ability to display pacemaker pulses is crucial in many situations. The pacemaker pulse amplitude specification of 2 to 700 mV embraces the range usually seen, taking into consideration both unipolar and bipolar pacemakers. Although a surface lead configuration can be selected so as to almost cancel out the pacemaker pulse, it is unrealistic to expect an electrocardiograph to recognize a pacemaker pulse that has a very low amplitude.

The rationale for the amplitude and duration parameters derives from a 1979 survey of commercially available pacemakers by one of the committee members. Amplitudes of 2 to 700 mV and durations of 0.1 to 2.0 ms were found to encompass the pulse characteristics of the great majority of ventricular pacemakers, as measured by the potential difference between two body surface electrodes. The requirement of this standard for 250 mV as an upper limit takes into account the lower amplitudes obtained using conventional or Frank leads, as compared to bipolar leads using two electrodes only. The requirement to display pulses having a minimum duration of 0.5 ms, rather than 0.1 ms, reflects the difficulty of designing systems that can reliably detect the low energy in short-duration, low-amplitude pulses.

The test method requires that the instrument be tested for pacemaker pulse display capability with the lowest-energy pulse as a worst-case situation (i.e., a pulse width of 0.5 ms and an amplitude of 2 mV). Similarly, the worst-case test for interference from a pacemaker pulse utilizes the highest-energy pulse encountered on the body surface (2-ms width, 250-mV amplitude).

The specified requirements and tests apply specifically to ventricular pacemakers. Broadening the requirements to take into account nonventricular pacemakers would have required data which were not available at the time this standard was developed. These data could not be obtained because of recent and continuing rapid developments in pacemaker technology.

A.3.2.15 Risk currents

Diagnostic ECG devices are deliberately connected to patients by means of conductive electrodes or wires. Frequently, ECGs are recorded for critically ill patients having catheters and pacemakers connected to their hearts. Therefore, the highest protection from risk currents must be provided.

The American Heart Association recommended that a maximum leakage current of 10 μA be permitted. This is consistent with the "isolated patient connection" requirements of the American National Standard, *Safe current limits for electromedical apparatus* (AAMI, 1985)—a baseline standard for all electromedical apparatus and hence referenced for purposes of this diagnostic ECG device standard. The specific rationale for the risk current requirements of that baseline standard is provided in its accompanying rationale statement.

A.3.2.16 Auxiliary output

In general, the auxiliary output requirements are dictated by the type of recording or display device connected to the ECG. The committee felt that, generally speaking, the AHA recommendations should be

© *2000 Association for the Advancement of Medical Instrumentation*

Single user license only. Copying, networking, and distribution prohibited.

followed. While it was not deemed necessary to enumerate detailed requirements for auxiliary output, it was considered that safety and efficacy demand, as a minimum, that a short-circuited output not damage the instrument and that risk current requirements not be degraded when auxiliary devices are connected to the diagnostic ECG device.

Annex B
(informative)

Cited references

ALMASI, JJ. and SCHMITT, OH. Systematic and random variations of ECG electrode system impedance. *Annals N.Y. Acad. Sci.,* 1970, vol. 170, p. 509.

AMERICAN NATIONAL STANDARDS INSTITUTE. Voltage ratings and electric power systems and equipment. ANSI C84.1a-1980. New York: ANSI 1980. American National Standard.

ASSOCIATION FOR THE ADVANCEMENT OF MEDICAL INSTRUMENTATION. *Cardiac defibrillator devices.* ANSI/AAMI DF2-1989. Arlington (Vir.): AAMI, 1989. American National Standard. ISBN 0-910275-91-2.

ASSOCIATION FOR THE ADVANCEMENT OF MEDICAL INSTRUMENTATION. *Safe current limits for electromedical apparatus.* ANSI/AAMI ES1-1985. Arlington (Vir.): AAMI, 1985. American National Standard. ISBN 0-910275-50-5.

BAILEY, JJ., et al. Recommendations for standardization and specifications in automated electrodardiography: Bandwidth and digital signal processing. A report for health professionals by an ad hoc writing group of the Committee on Electrocardiography and Cardiac Electrophysiology of the Council on Clinical Cardiology, American Heart Association *Circulation*, 1990, vol. 81, no. 2, p. 730-39.

BERSON, AS., LAU, FYK., WOJICK, JM., and PIPBERGER, HV. Distortions in infant electrocardiograms caused by inadequate high frequency response. *Amer. Heart Journal,* 1977, vol. 93, p. 730.

BERSON, AS. and PIPBERGER, HV. Electrocardiographic distortions caused by inadequate high frequency response of direct-writing electrocardiographs. Amer. Heart Journal, 1967, vol. 74, p. 208.

BERSON, AS. and PIPBERGER, HV. The low frequency response of electrocardiographs, a frequent source of recording error. Amer. Heart Journal, 1966, vol. 71, p. 779.

BERSON, AS. and PIPBERGER, HV. Skin electrode impedance problems in electrocardiography. Amer. Heart Journal, 1968, vol. 76, p. 519.

BERSON, AS. and PIPBERGER, HV. Slew rates for electrocardiographic signals. *IEEE Trans. Biomed. Engr.*, 1978, vol. 25, p. 299.

ECRI. *The development of environmental test methods for non-implantable medical devices,* Final Report. Contract No. 223-77-5035. Plymouth Meeting, PA: ECRI, 1979.

FLOWERS, NC., et al. The anatomic basis for high frequency components in the electrocardiogram. *Circulation,* 1969, vol. 39(a), p. 531.

FLOWERS. NC., et al. Location of the sight of myocardial scarring in man by high frequency components. Circulation, 1969, vol. 40(b), p. 927.

HURZELER, P., DECAPRIO, V., and FURMAN, S. Endocardial electrocardiograms and pacemaker sensing. Med. Instrum., 1976, vol. 10, no. 4, p. 178-182.

INTERNATIONAL ELECTROTECHNICAL COMMISSION. Performance requirements and single-channel and multi-channel electrocardiographs. Geneva: IEC, 1978. IEC 62-D June 1978 draft.

© ***2000 Association for the Advancement of Medical Instrumentation***

Single user license only. Copying, networking, and distribution prohibited.

KERBER, RE., et al. Transthoracic resistance in human defibrillation. *Circulation,* 1981, vol. 63, no. 3, p. 676-682.

KOSSMAN CE., et al. Recommendations for standardization of leads and specifications for instruments in electrocardiography and vectorcardiography. *Circulation,* 1967, vol. 33, p. 533. American Heart Association Committee on Electrocardiography.

LANGER, PH. JR. Further studies in high fidelity electrocardiography: Myocardial infarction. Circulation, 1953, vol. 8, p. 905.

LANGER, PH., et al. High frequency components in the electrocardiograms of normal subjects and of patients with coronary heart disease. Amer. Heart Journal, vol. 62, p. 746.

PIPBERGER, HV., et al. Recommendations for standardization of leads and of specifications for instruments in electrocardiography and vectorcardiography. *Circulation,* 1975, vol. 5, no. 2, p. 11. American Heart Association Committee on Electrocardiography.

SCHOENBERG, AA., BOOTH, HE., and LYON, PC. Development of standard test methods for evaluating defibrillation recovery characteristics of disposable ECG electrodes. Med. Instrum., 1979, vol.13(5), p. 259-265.

SCHOENBERG, AA., et al. The development of test methods for disposable ECG electrodes, Final Report. UBTL TR 1605-005, FDA Contract No. 223-74-5253. Salt Lake City: UBTL, April 1979.

SCHOENBERG, AA., et al. *Fourth draft standard for electrocardiographic devices.* UBTL TR 227-003, FDA Contract No. 223-74-5253, FDA MDS-021-0006. Salt Lake City: UBTL, January 1977.

SCHOENBERG, AA., et al. *Literature and technology review: study and development of standards for diagnostic electrocardiography.* UBTL TR 157-013, FDA Contract No. 223-74-5253. Salt Lake City: UBTL, August 1975.

SCHMITT, OH. and ALMASI, JJ. Electrode impedance and voltage offset as they affect efficiency and accuracy of VCG and ECG measurement. In *Proceedings of the XIth International Vectocardiography Symposium.* New York: North-Holland Publishing Co., 1970.

SCHWARZCHILD, M. and KISSEN, M. The effect of condensers in the electrocardiograph. *Amer. Heart Journal,* 1934, vol. 9, p. 517.

SIMONSON, E. Differentiation between normal and abnormal in electrocardiography. St. Louis: CV Mosby Co, 1961, p. 158.

SIMONSON, E., BROZEK, J.,and KEYS, A. Variability of the electrocardiogram in normal young men. *Amer. Heart Journal,* 1949, vol. 38, p. 407-422.

SPACH, MS., et al. Skin electrode impedance and its effect on recording cardiac potentials. *Circulation,* 1966, vol. 34, p. 694.

SYLVESTER, RH., et al. New quantitative vectorcardiographic criteria for the detection of unsuspected myocardial infarction in diabetics. Amer. Heart Journal., 1968, vol. 75, p. 335.

Annex C
(informative)

Bibliography

AINGER, LE. Digital computer analysis of the vectorcardiogram of the newborn infant: quantitative and comparative measurement of three orthogonal lead systems. *Circulation,* 1967, vol. 36, p. 906.

© ***2000 Association for the Advancement of Medical Instrumentation***

Single user license only. Copying, networking, and distribution prohibited.

CACERES, CA. Performance of the computer and physician in the analysis of the electrocardiogram. *Amer. Heart Journal,* 1970, vol. 74, p. 439.

CANADIAN STANDARDS ASSOCIATION. *Electromedical equipment.* CSA Standard C22.2, No. 125. Rexdale, Ontario: CSA, 1973.

EDDLEMAN, HE. and PIPBERGER, HV. Computer analysis of the orthogonal electrocardiogram and vectorcardiogram in 1002 patients with myocardial infarction. *Amer. Heart Journal,* 1971, vol. 81, p. 608.

FRANK, E. An accurate clinically practical system for spatial vectorcardiography. *Circulation,* 1956, vol. 13, p. 737.

HELPPI, RR., et al. Suggested minimum performance requirements and methods of performance evaluation for computer ECG analysis program. *Canad. Med. Assn. Journal,* 1973, vol. 108, p. 1251.

INTERNATIONAL ELECTROTECHNICAL COMMISSION. Electrocardiographs, particular requirements for safety. IEC 62-D, February 1981 draft. Geneva: IEC, 1981.

INTERNATIONAL ELECTROTECHNICAL COMMISSION. *Safety of medical electrical equipment, general requirements.* IEC 601-A-1977. Geneva: IEC, 1977.

NATIONAL ARCHIVES AND RECORDS ADMINISTRATION. Protection of Privacy. *Federal Register,* Chapter 1, April 1, 1991.

NF. *Medical electrical equipment—Part II: Particular requirements for safety and performance for electrocardiographs.* NF C-74-305.

NF. *The safety of medical electrical equipment—Part I: General requirements.* NF C-74-010.

PIPBERGER, HV. Analysis of electrocardiograms by digital computer. *Methodik Info. Medizin*., 1962, vol. 1, p. 69.

PIPBERGER, HV. Use of computers in interpretation of electrocardiograms. *Circulation Res.*, 1962, vol. 11, p. 555.

PIPBERGER, HV., et al. Clinical application of a second generation electrocardiographic computer program. *Amer. J. Cardiol.*, 1975, vol. 35, p. 597.

PUBLIC HEALTH SERVICE. *Computers, electrocardiography and public health.* Washington, DC: Public Health Service Publications, 1967.

SHERWOOD, JDV. Suggested standards for instrumentation in computer processing of electrocardiographs. *Canad. Med. Assn. Journal,* 1973, vol. 108, p. 1259.

© ***2000 Association for the Advancement of Medical Instrumentation***

Single user license only. Copying, networking, and distribution prohibited.

Annotations from EC11.pdf

Page 3

Annotation 1; Label: AAMI; Date: 10/07/2000 8:44:50 PM
*At the time of ballot, Mr. Rooks represented SpaceLabs, Inc.

Page 5

Annotation 1; Label: AAMI; Date: 10/07/2000 8:45:52 PM
1)Electrodes and associated cables are subject to the provisions of this standard inasmuch as they are required for conducting most of the performance and safety tests. Manufacturer-specified cables must be used for such tests, since defibrillator protection, diathermy protection, diatherymy protection, risk current, common mode rejection, and input impedance test results may depend on the cable characteristics; also, some devices may use buffer amplifiers as part of the electrode. Not covered by this standard are requirements for electrode size and for electrode performance independent of the system; not are connectors for electrodes and cables covered. The standard provides for up to 300-m V polarization voltage differences between electrodes. This will generally mean that dissimilar electode materials may not be used. Also, there is some question as to the polarization potentials attained with some types pf electrodes; e.g., stainless steel, particularly after overload. Recovery from defibrillation overload may be especially compromised because of the characteristics of these electrodes. Section 3.1.2.1(d) requires a cautionary statement to be included in the operator's manual. Manufacturers are required by the standard to specify what type of electrode is acceptable for use with their equipment. (See also the AAMI standard for disposable ECG electrodes, applicable document 2.2.2.)

Annotation 2; Label: AAMI; Date: 10/07/2000 8:46:56 PM
2)It is recognized that the quality of telephone line or other means of transmission cannot be controlled by the electrocardiograph manufacturer. If the ECG equipment is intended for use with telephone transmission, however, the standard requires that the manufacturer disclose the minimum performance characteristics of the remote transmission system (e.g., allowable error, noise level, frequency response) necessary to ensure that the total system meets the requirements of the standard.

Page 8

Annotation 1; Label: AAMI; Date: 10/07/2000 8:49:08 PM
1)Located at the transverse level of the ventricles (i.e., 5th interspace at the left sternal border).

Page 12

Annotation 1; Label: AAMI; Date: 10/07/2000 8:55:41 PM
2)For the unipolar chest leads, V represents the potential at each respective chest electrode location: i.e., for voltage V1, V represents the potential at wlwctrode location V1; for voltage V2, V represents the potential at electrode location V2; and so forth.

Annotation 2; Label: AAMI; Date: 10/07/2000 8:56:09 PM
3)By convention, X is oriented horizontally and towards the left arm of the patient, Y points towards the feet, and Z is horizontal and towards the back of the patient.

Page 13

Annotation 1; Label: AAMI; Date: 10/07/2000 8:57:43 PM
1)relative to 10-Hz output

Annotation 2; Label: AAMI; Date: 10/07/2000 8:58:07 PM
2)relative to 200-ms output

Single user license only. Copying, networking, and distribution prohibited.

Page 18

Annotation 1; Label: AAMI; Date: 10/08/2000 5:03:31 PM
1)Square wave pulse only; not applicable to triangular waveform.

Annotation 2; Label: AAMI; Date: 10/08/2000 5:03:55 PM
2)Pacemaker pulse must be visible on the recordings with an amplitude of at least 0.2 mV RTI; input parameters are as specified, except pulse duration is 0.5 to 2.0 ms.

Page 24

Annotation 1; Label: AAMI; Date: 10/08/2000 5:13:43 PM
1)The right leg lead, if provided, shall be connected to P6 of figure 3, or the ground or negative side of other test circuits where appropriate.

Annotation 2; Label: AAMI; Date: 10/08/2000 5:14:16 PM
2)Patient electrode connections supplied with the patient cable, but not specified in this table, may be connected to P2 of figure 3

Page 42

Annotation 1; Label: AAMI; Date: 10/08/2000 5:42:13 PM
1)Color code 1 is that commonly used in Europe and recommended by the International Electrotechnical commission.

Annotation 2; Label: AAMI; Date: 10/08/2000 5:42:40 PM
2)Color code 2 is that commonly used in the U.S.A. and recommended by the American Heart Association

Annotation 3; Label: AAMI; Date: 10/08/2000 5:43:23 PM
3)Located at the transverse level of the ventricles (e.g., 5th interspace at the left sternal border).

Page 52

Annotation 1; Label: AAMI; Date: 10/08/2000 6:04:08 PM
1)All values in kilohms; frequency is 10 Hz. The table entries in columns two, three, and four represent values of impedance magnitude for one electrode that should be exceeded at the indicated body location by the percentage of the population shown in column one. The data are for 15-mm suctionelectrodes used with Sanborn Redux paste. Computations are based on the log-normal distribution model for the 20-subject sample. (From Almasi & Schmitt, 1970)

Single user license only. Copying, networking, and distribution prohibited.