US 20090246922A1

(19) United States

(12) Patent Application Publication

Wu et al.

(10) Pub. No.: US 2009/0246922 A1

(43) Pub. Date: Oct. 1, 2009

(54) METHOD OF FORMING CMOS TRANSISTOR

(76) Inventors: **Meng-Yi Wu**, Kaohsiung County (TW); **Cheng-Tung Huang**, Kao-Hsiung City (TW); **Wen-Han Hung**, Kao-Hsiung City (TW); **Shyh-Fann Ting**, Tai-Nan City (TW); **Kun-Hsien Lee**, Tai-Nan City (TW); **Li-Shian Jeng**, Tai-Tung Hsien (TW); **Shih-Jung Tu**, Tainan City (TW); **Yu-Ming Lin**, Tainan County (TW); **Yao-Chin Cheng**, Hsinchu City (TW)

Correspondence Address:
NORTH AMERICA INTELLECTUAL PROPERTY CORPORATION
P.O. BOX 506
MERRIFIELD, VA 22116 (US)

(21) Appl. No.: **12/056,277**

(22) Filed: **Mar. 27, 2008**

Publication Classification

(51) **Int. Cl.**
H01L 21/8238 (2006.01)

(52) **U.S. Cl.** **438/231**; 257/E21.634; 257/E21.64

(57) **ABSTRACT**

A method of forming CMOS transistor is disclosed. A CMOS transistor having a first active area and a second active area is provided. In order to maintain the concentration of the dopants in the second active area, according to the method of the present invention an ion implantation process is performed to form a lightly doped drain (LDD) in the second active area after an epitaxial layer is formed in the first active area. On the other hand, the ion implantation process is performed to form the respective LDD of the first active area and the second active area. After the epitaxial layer in the first active area is formed, another ion implantation process is performed to implant dopants into the LDD of the second active area again.

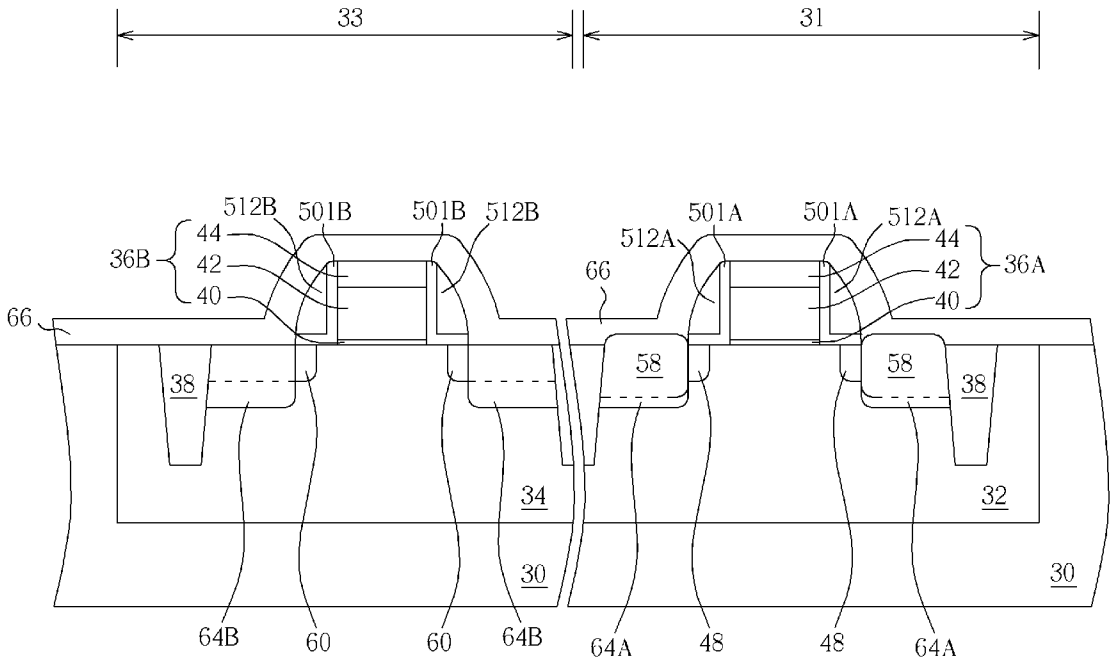

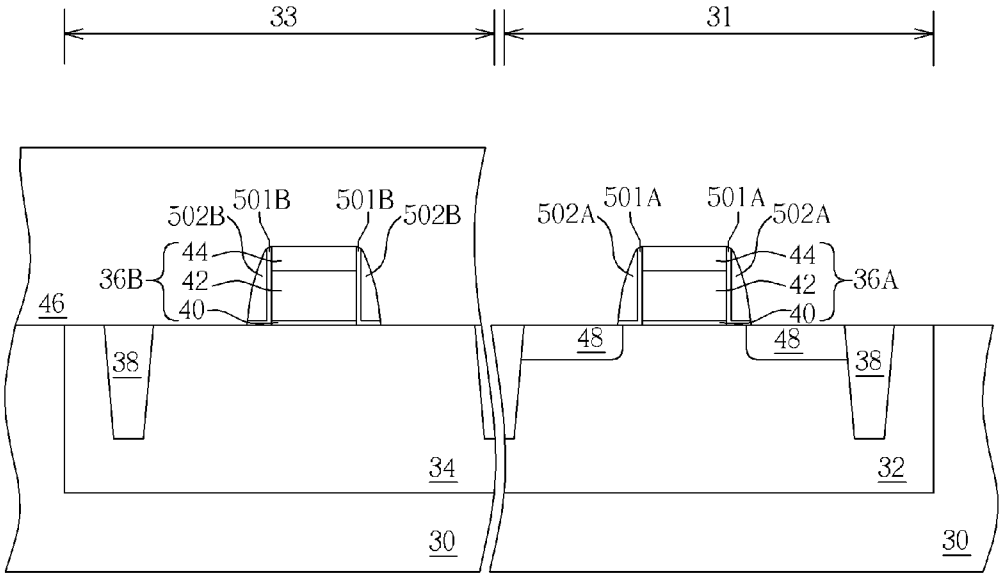
33
31
502B
501B
501B
502B
502A
501A
501A
502A
44
42
40
36B
36A
46
48
38
34
32
30

FIG. 1

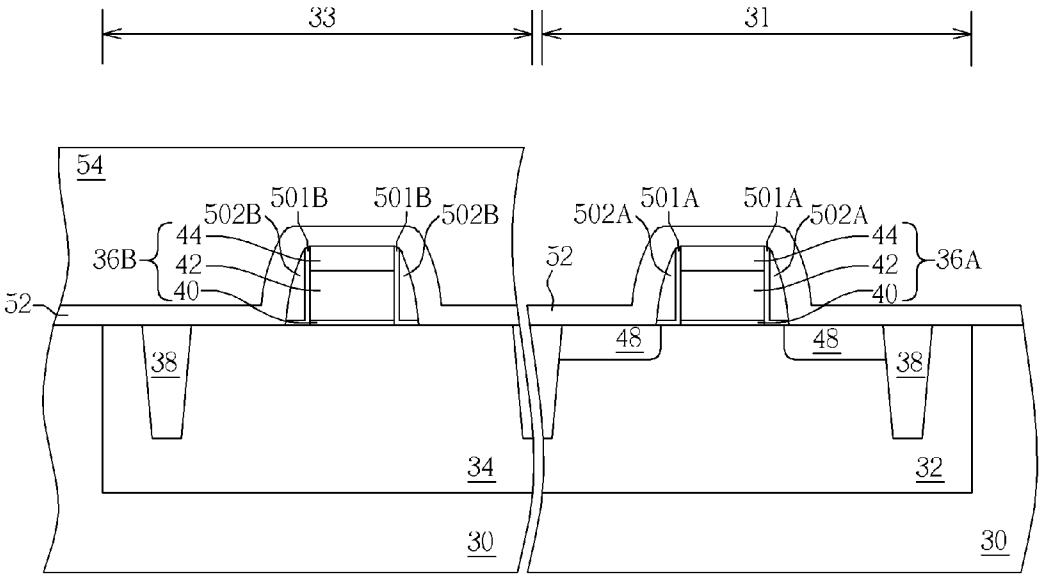
33
31
54
502B
501B
501B
502B
502A
501A
501A
502A
44
42
40
36B
36A
52
48
38
34
32
30

FIG. 2

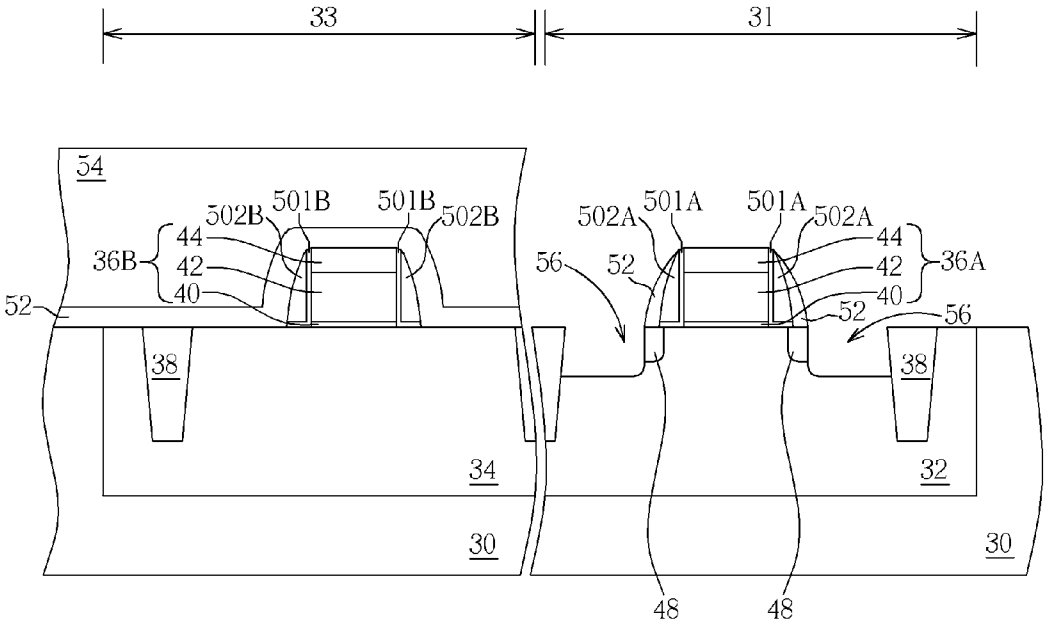
33
31
54
502B
501B
501B
502B
502A
501A
501A
502A
44
42
40
36B
36A
56
52
38
34
32
30
48

FIG. 3

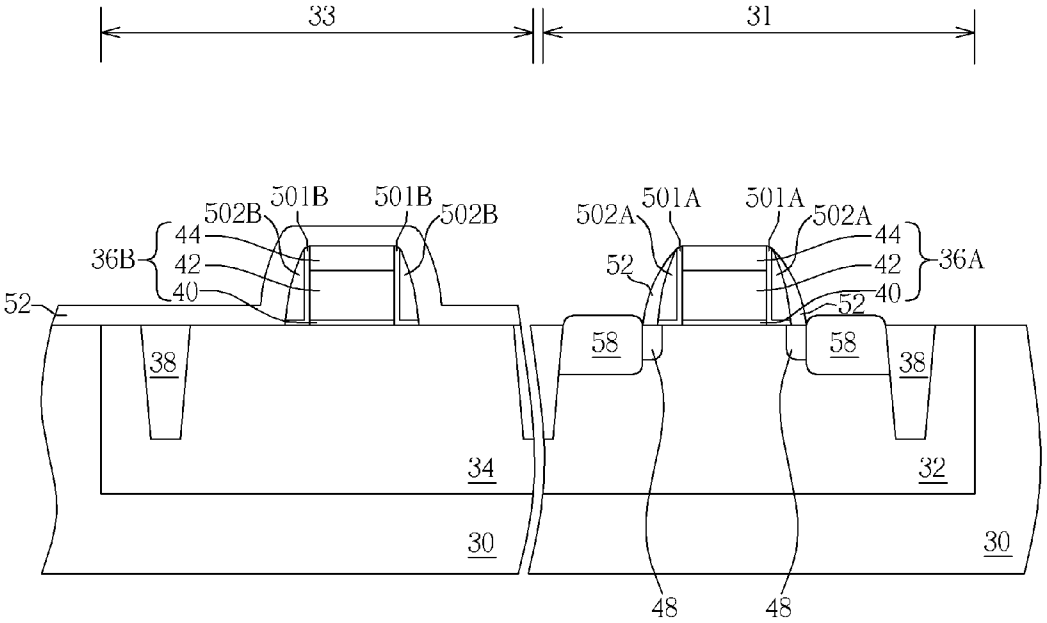
33
31
502B
501B
501B
502B
502A
501A
501A
502A
44
42
40
36B
36A
52
58
38
34
32
30
48

FIG. 4

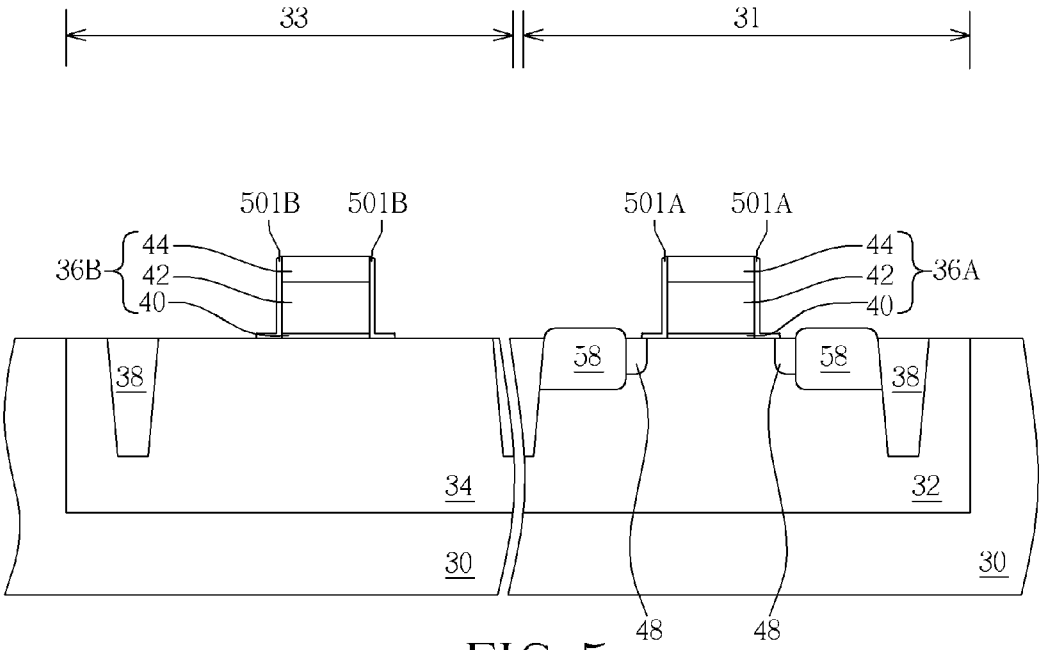
33
31
501B
501B
501A
501A
36B
44
42
40
44
42
40
36A
38
58
58
38
34
32
30
30
48
48

FIG. 5

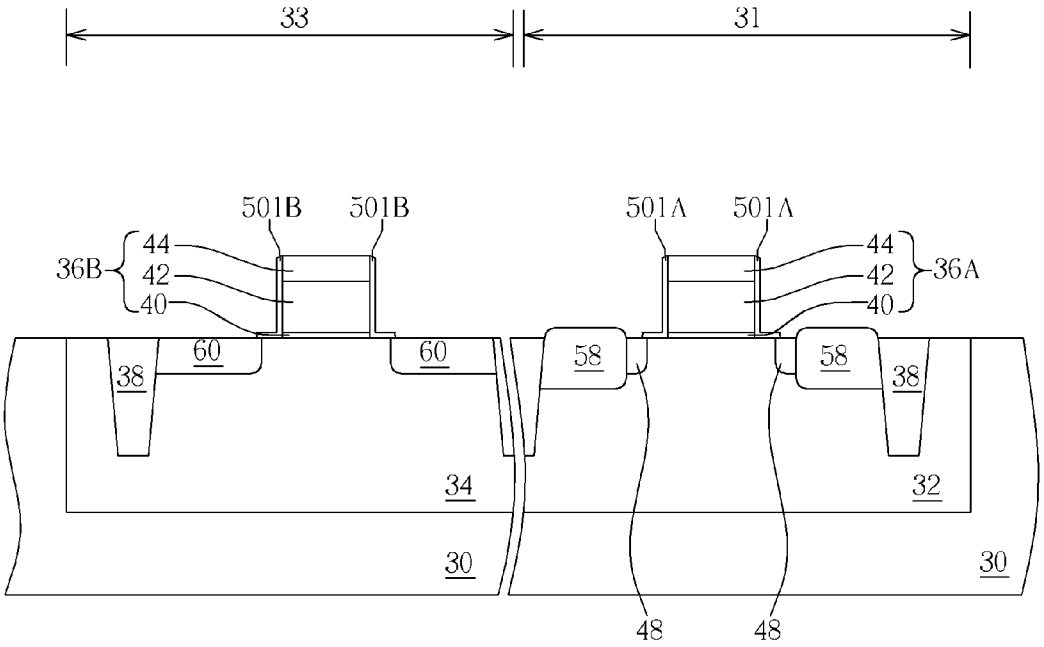
33
31
501B
501B
501A
501A
36B
44
42
40
44
42
40
36A
60
60
38
58
58
38
34
32
30
30
48
48

FIG. 6

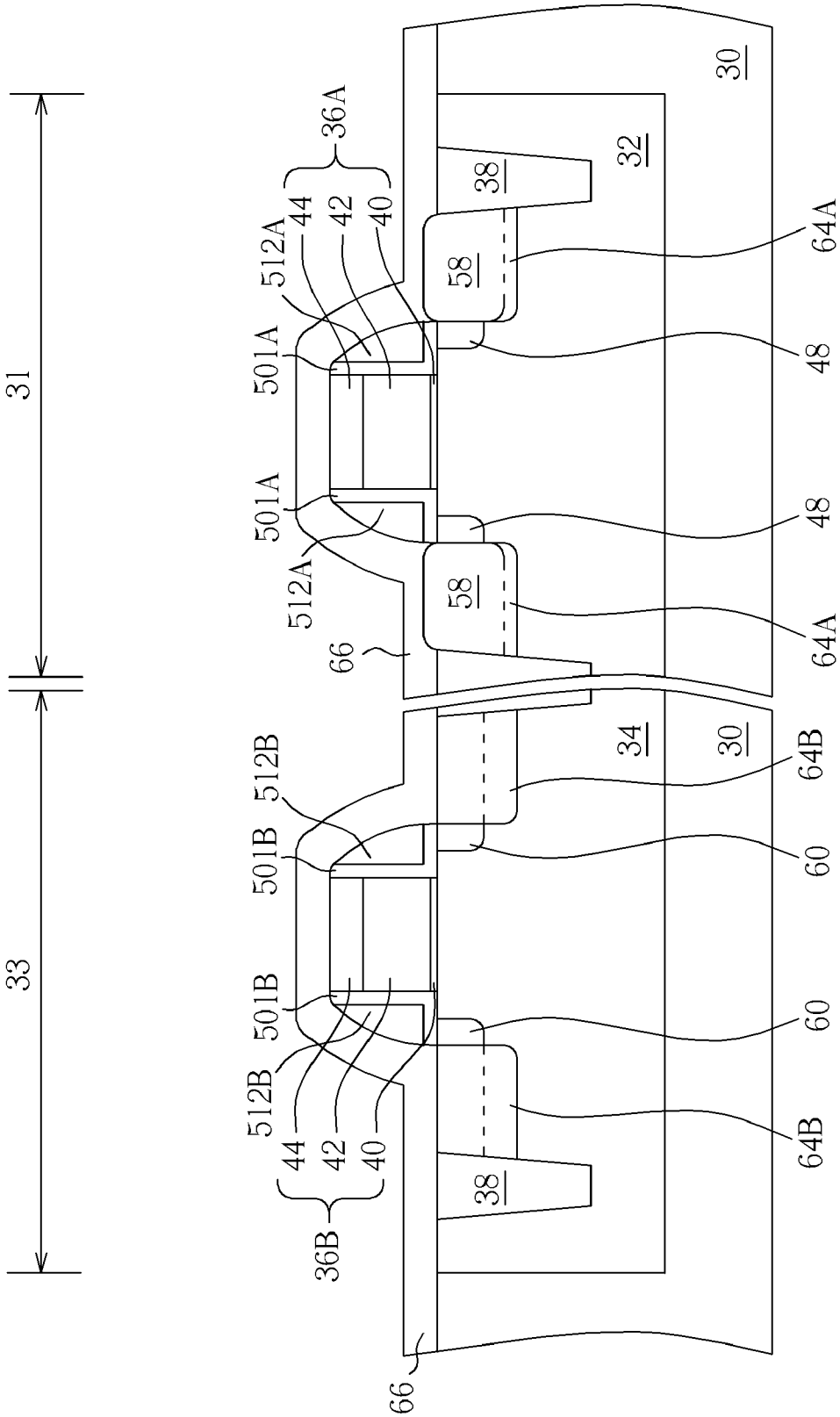
31
33
36A
36B
512A
512B
501A
501B
44
42
40
38
58
64A
64B
48
60
66
30
32
34

FIG. 7

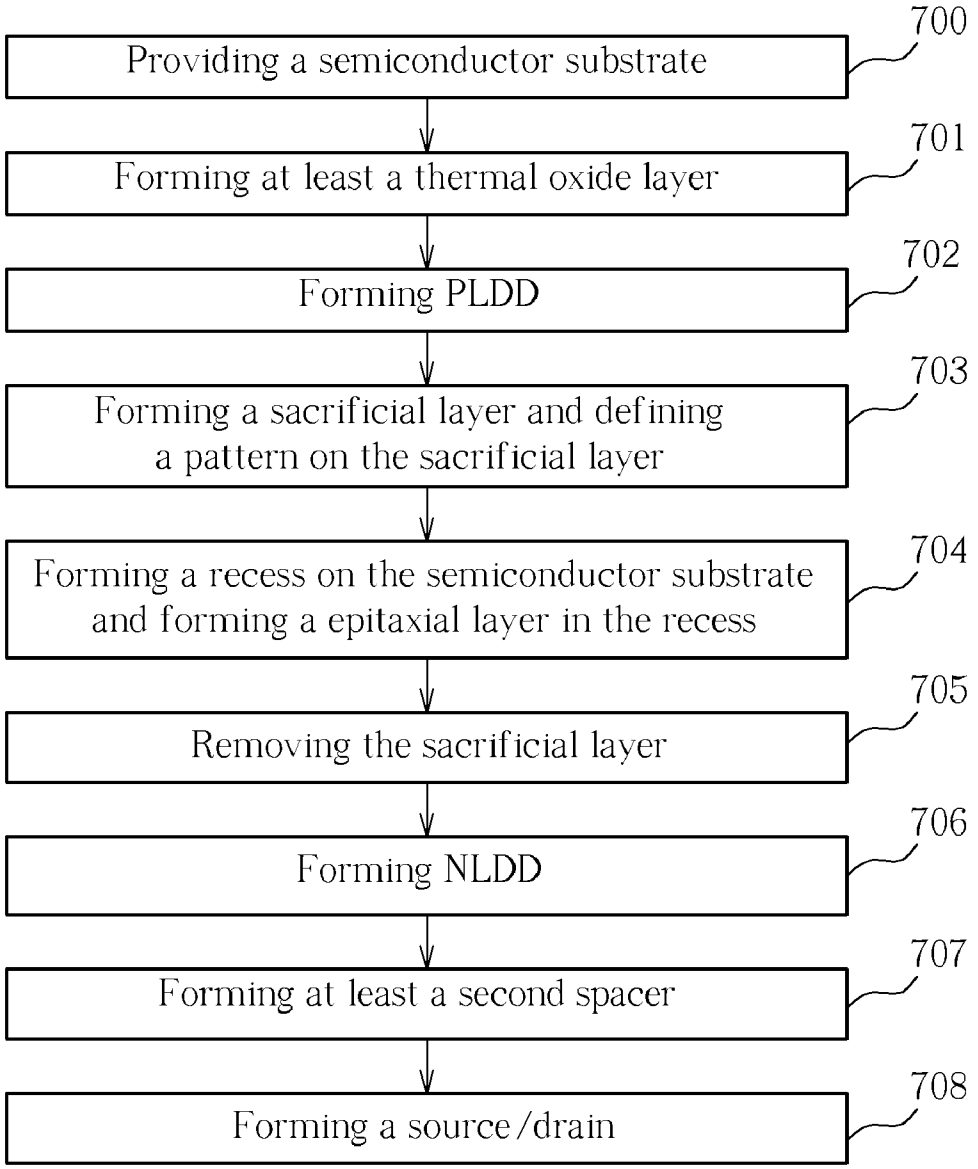
700
Providing a semiconductor substrate
701
Forming at least a thermal oxide layer
702
Forming PLDD
703
Forming a sacrificial layer and defining a pattern on the sacrificial layer
704
Forming a recess on the semiconductor substrate and forming a epitaxial layer in the recess
705
Removing the sacrificial layer
706
Forming NLDD
707
Forming at least a second spacer
708
Forming a source/drain

FIG. 8

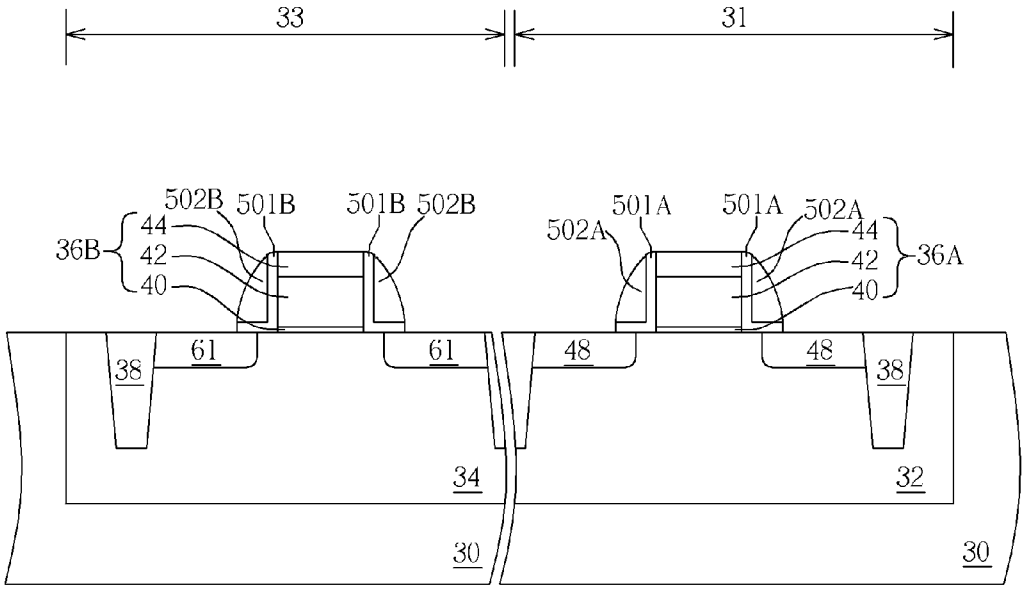
33
31
502B
501B
501B
502B
501A
501A
502A
502A
36B
44
42
40
44
42
40
36A
61
61
48
48
38
38
34
32
30
30

FIG. 9

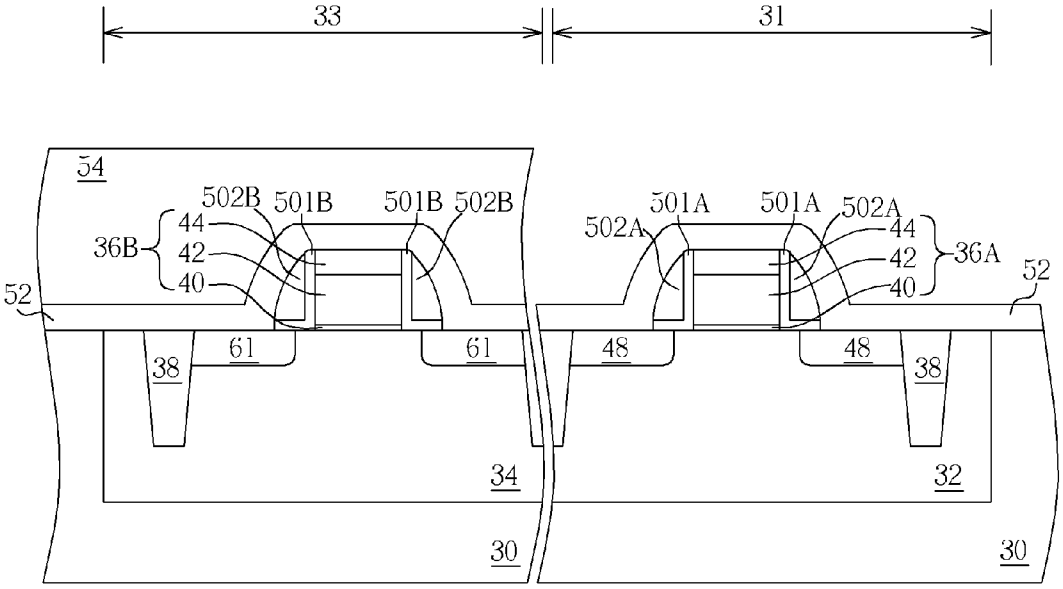
33
31
54
502B
501B
501B
502B
501A
501A
502A
502A
36B
44
42
40
44
42
40
36A
52
52
61
61
48
48
38
38
34
32
30
30

FIG. 10

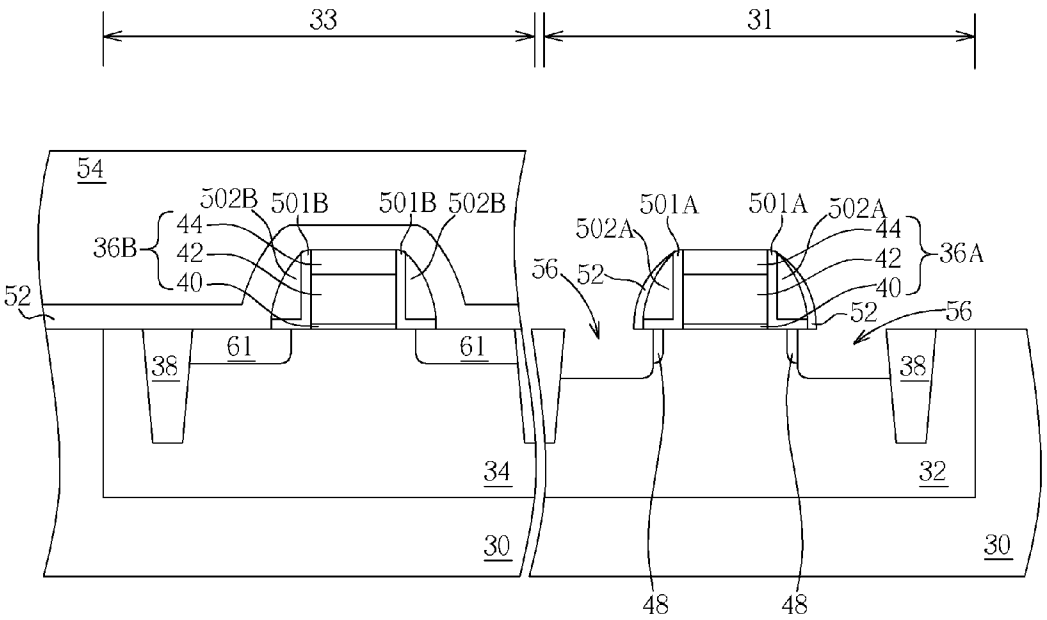
33
31
54
502B
501B
501B
502B
501A
501A
502A
502A
44
42
40
36B
36A
52
56
61
61
38
38
34
32
30
30
48
48

FIG. 11

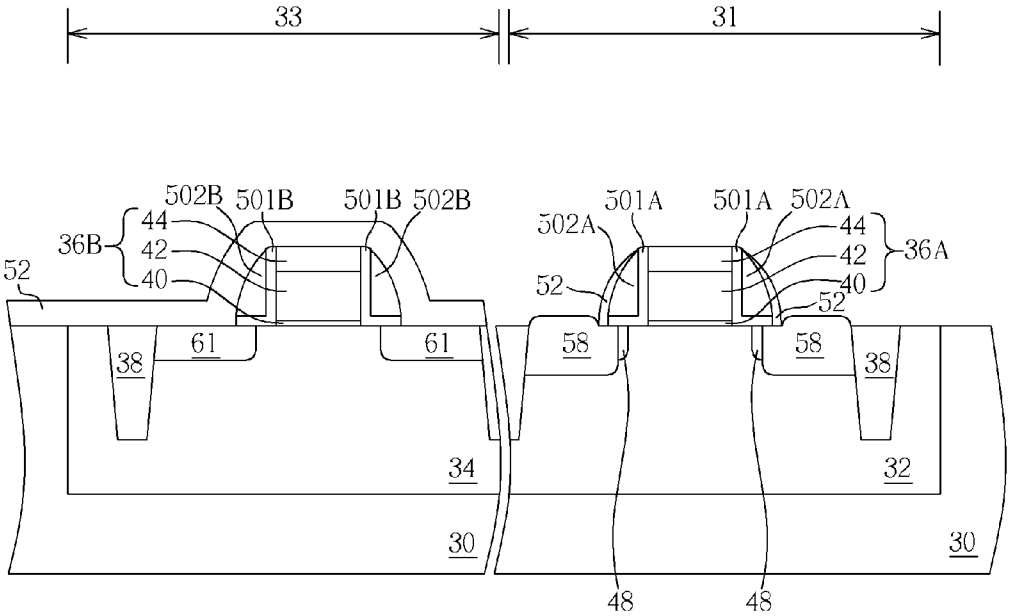
33
31
502B
501B
501B
502B
501A
501A
502A
502A
44
42
40
36B
36A
52
61
61
58
58
38
38
34
32
30
30
48
48

FIG. 12

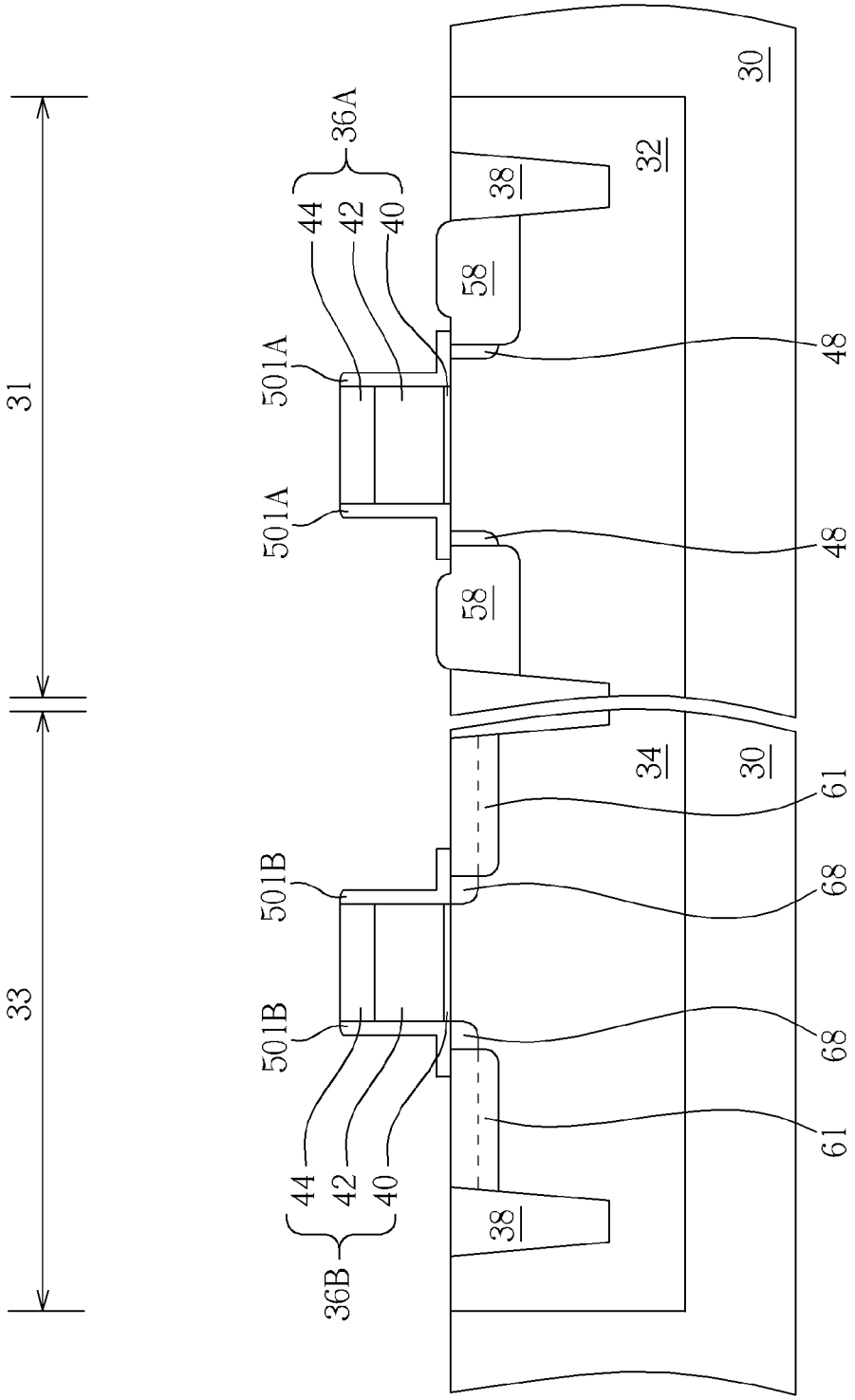
31
33
36A
44
42
40
501A
501A
58
38
32
30
48
48
58
34
30
61
68
501B
501B
68
61
44
42
40
36B
38

FIG. 13

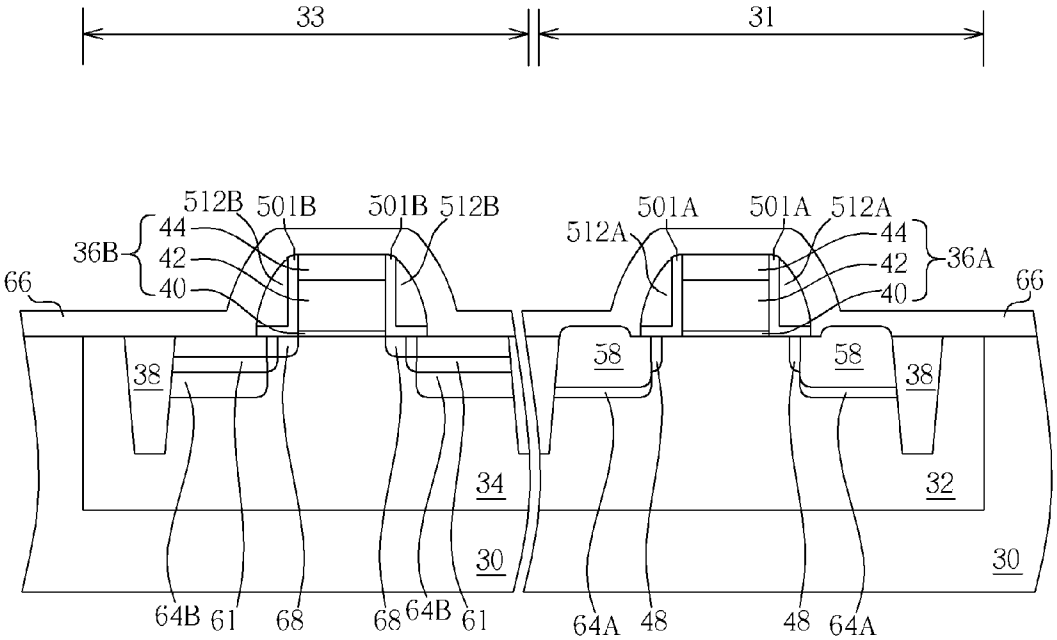
33
31
512B
501B
501B
512B
501A
501A
512A
512A
44
42
40
36B
36A
66
66
58
58
38
38
34
32
30
30
64B
61
68
68
64B
61
64A
48
48
64A

FIG. 14

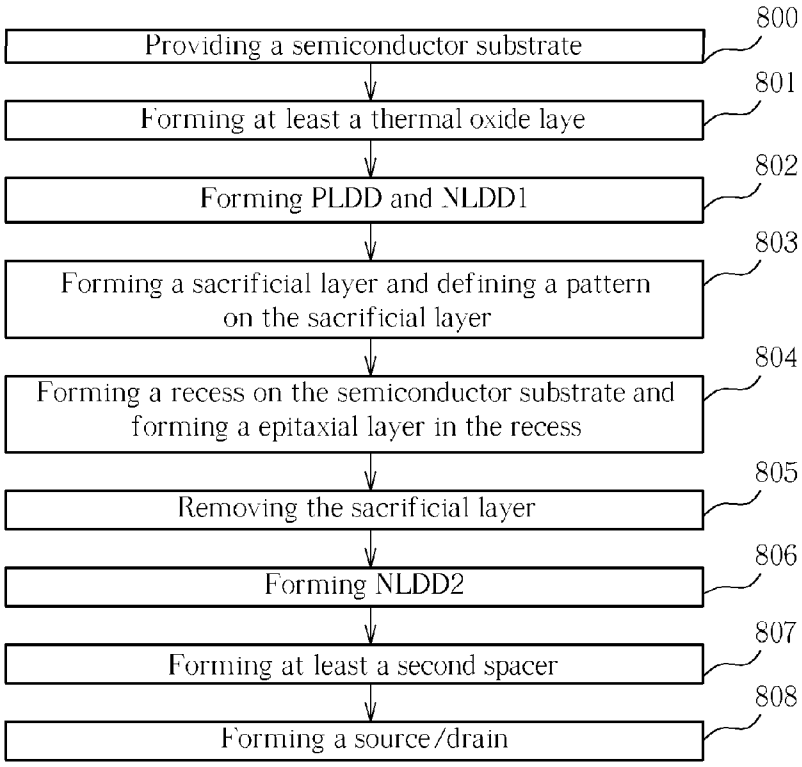
Providing a semiconductor substrate
800
Forming at least a thermal oxide laye
801
Forming PLDD and NLDD1
802
Forming a sacrificial layer and defining a pattern on the sacrificial layer
803
Forming a recess on the semiconductor substrate and forming a epitaxial layer in the recess
804
Removing the sacrificial layer
805
Forming NLDD2
806
Forming at least a second spacer
807
Forming a source/drain
808

FIG. 15

METHOD OF FORMING CMOS TRANSISTOR

BACKGROUND OF THE INVENTION

[0001] 1. Field of the Invention

[0002] The present invention is related to a method of forming a CMOS transistor.

[0003] 2. Description of the Prior Art

[0004] The industrial circles are used to reducing device dimensions to improve the performance of metal-oxide semiconductor (MOS) transistors. However, this method encounters difficulties with high-expenses and technical bottlenecks in recent years. For these reasons, the industrial circles seek other methods to improve MOS transistor performance. And accordingly, a highly noticed method is to utilize the material characteristics to cause strain effect on MOS transistors.

[0005] In order to increase the driving current of a complementary metal-oxide semiconductor (CMOS) transistor including a p-type MOS (PMOS) transistor and an n-type MOS (NMOS) transistor, the industrial circles develop a strained-silicon technique, which uses unique processes or lattice constant discrepancy to increase driving current. The strained-silicon technique substantially includes a substrate-strained based method and a process-induced strain based method. The substrate-strained based system is performed with a strained-silicon substrate or a selective epitaxial growth process that results in lattice constant discrepancy. The process-induced strain based method is performed with several unique processes to form a strained thin film upon a surface of the MOS transistor that exert tensile stress or compressive stress upon the MOS transistor. Both of the strained-silicon techniques introduce strain into the channel region and reduce carrier mobile resistance thereby improving carrier mobility and MOS transistor performance.

[0006] During the fabrication processes for forming a CMOS transistor, a hard mask, such as a silicon nitride layer, is formed covering on the NMOS transistor or the PMOS transistor, and so that the exposed transistor is treated in the following process. Moreover, a phosphoric acid treatment is performed to remove the silicon nitride layer. However, a substrate loss occurs during the phosphoric treatment, and particularly to the substrate having high a concentration of dopants therein. Therefore, it is considerable to improve the conventional processes of the strained-silicon technique and to maintain the performance of the devices formed by the strained-silicon technique.

[0007] For the reasons above, the industry circles try to develop a method of strained-silicon technique to fabricate CMOS transistors and improve CMOS transistor reliability.

SUMMARY OF THE INVENTION

[0008] The following presents a simplified summary in order to provide a basic understanding of one or more aspects of the invention. This summary is not an extensive overview of the invention, and is neither intended to identify key or critical elements of the invention, nor to delineate the scope thereof. Rather, the primary purpose of the summary is to present some concepts of the invention in a simplified form as a prelude to the more detailed description that is presented later.

[0009] The primary objective of the present invention is to provide a method of forming a strained CMOS transistor to improve CMOS transistor performance and reliability and to overcome the drawback of conventional techniques. Initially, a semiconductor substrate having at least a first active area and at least a second active area is provided. The first active area and the second active area include a respective gate structure. A first light doped drain is formed beside the gate structure in the first active area. A sacrificial layer is formed on the semiconductor substrate. An etch process is performed to etch the sacrificial layer and a surface of the semiconductor substrate beside the gate structure in the first active area to form a recess on a surface of the semiconductor substrate beside the gate structure of the first active area. A selective epitaxial process is performed to form an epitaxial layer in the recess. After that, the sacrificial layer is removed, and a second light doped drain is formed beside gate structure in the second active area.

[0010] The light doped drain of the second active area is formed after the sacrificial layer is removed. Performing the method of the present invention is capable of preventing substrate dopant loss in the second active area of the semiconductor substrate during the process of removing the sacrificial layer. Therefore, the CMOS transistor formed by the method of the present invention has good working efficiency.

[0011] These and other objectives of the present invention will no doubt become obvious to those of ordinary skill in the art after reading the following detailed description of the preferred embodiment that is illustrated in the various figures and drawings.

BRIEF DESCRIPTION OF THE DRAWINGS

[0012] FIG. **1** to FIG. **7** are schematic diagrams illustrating a method of forming a CMOS transistor according to a first preferred embodiment of the present invention.

[0013] FIG. **8** is a flow diagram illustrating a method of forming a CMOS transistor in accordance with the first preferred embodiment of the present embodiment.

[0014] FIG. **9** to FIG. **14** are schematic diagrams illustrating a method of forming a CMOS transistor according to a second preferred embodiment of the present invention.

[0015] FIG. **15** is a flow diagram illustrating a method of forming a CMOS transistor in accordance with the second preferred embodiment of the present embodiment.

DETAILED DESCRIPTION

[0016] In the following detailed description, reference is made to the accompanying drawings, which form a part of this application. The drawings show, by way of illustration, specific embodiments in which the invention may be practiced. It is to be understood that other embodiments may be utilized and structural changes may be made without departing from the scope of the present invention.

[0017] Please refer to FIG. **1** to FIG. **7**, which are schematic diagrams illustrating a method of forming a CMOS transistor according to a first preferred embodiment of the present invention. Referring to FIG. **1**, a semiconductor substrate **30** is provided. A plurality of first active area and a plurality of second active area are defined on the semiconductor substrate **30**. Each of the first active area includes a first-type well and a gate structure, and each of the second active area includes a second-type well and a respective gate structure thereon. In the first preferred embodiment of the present invention, the first active area is a PMOS transistor region **31**, and the second active area is an NMOS transistor region **33**. Therefore, the first-type well is an N well, and the second-type well

UMC 1005
UMC v. AICP

is a P well. The following diagrams shows a gate structure **36**A and an N well **32** formed in the PMOS transistor region **31**, and a gate structure **36**B and a P well **34** in the NMOS transistor region **33** for illustration. A plurality of isolation structures between the MOS transistors to prevent short circuiting, such as shallow trench isolations **38** formed between the PMOS transistor region **31** and the NMOS transistor region **33**. Each of the gate structure **36**A, **36**B includes a gate dielectric layer **40**, a gate **42**, and a cap layer **44**. The gate dielectric layer **40** may comprise dielectric materials including silicon oxide, oxynitride, and silicon nitride; high-k dielectric materials including metal oxide, metal silicate, metal aluminate, and metal oxynitride; or combinations thereof. The gate dielectric layer **40** may be formed by a thermal oxidation process, a nitridation process, or a chemical vapor deposition (CVD) process. The gate **42** may use polysilicon, silicon germanium (SiGe), metal, silicide, metal nitride, metal oxide, or combinations thereof as material. The material of the cap layer **44** may include silicon oxide, oxynitride, silicon nitride, or silicon carbide (SiC). A thermal oxidation process is performed to form an oxide layer **501**A, **501**B on sidewalls of the gate structures **36**A, **36**B for protecting the gate structures **36**A, **36**B.

[0018] As shown in FIG. **1**, a spacer formation process is optionally performed to form at least a first spacer **502**A, **502**B respectively beside the thermal oxide layers **501**A, **501**B. The preferred first spacers **502**A, **502**B may be a single-layered structure or a multi-layered structure. The preferred material of the first spacers **502**A, **502**B may use silicon oxide, silicon nitride, oxynitride, or other adoptable dielectric material. The first spacers **502**A, **502**B are formed by a plasma enhanced chemical vapor deposition (PECVD) process, a low-pressure chemical vapor deposition process (LPCVD), or other method for depositing the material layers of the first spacers **502**A, **502**B. Subsequently, an etch back process is performed to etch the material layers of the first spacers **502**A, **502**B. A first patterned photoresist **46** is formed on the gate structure **36**B and a surface of the N well **32**. A first ion implantation process is performed to implant dopants, such as boron (B) or fluoride boron ion (BF_2^+), into a region of the N well **32** beside the gate structure **36**A. Therefore, a p-type light doped drain (PLDD) **48** is formed in a region of the N well **32** beside the gate structure **36**A. Furthermore, a rapid thermal process is optionally performed after the formation of the PLDD **48** for diffusing and activating the dopants therein.

[0019] As shown in FIG. **2**, the first patterned photoresist **46** is removed, and a sacrificial layer **52**, such as a silicon nitride layer, is formed covering the semiconductor substrate **30**. A second patterned photoresist **54** is formed covering gate structure **36**B and the P well **34**.

[0020] Please refer to FIG. **3**, an etch process, i.e. an anisotropic etch process, is performed using the second patterned photoresist **54** as an etching mask to etch the sacrificial layer **52** and the semiconductor substrate **30**, which are not covered by the second patterned photoresist **54**. Therefore, a recess **56** is formed on the surface of the N well **32** beside the gate structure **36**A.

[0021] Please refer to FIG. **4** in company with FIG. **3**. The second patterned photoresist **54** is removed. A selective epitaxial growth process is performed to form an epitaxial layer, such as an epitaxial layer **58** of silicon germanium. The preferred epitaxial layer **58** has a lattice constant greater than that of the semiconductor substrate **30**, and is slightly extended approaching to the channel. Preferably, the epitaxial layer **58** is slightly projected from the top surface of the semiconductor substrate **30** to compress the channel and to keep silicon layers formed in the following steps from the interface between the source/drain in a distance. The top surface of the epitaxial layer **58** may be substantially leveled with or lower than the top surface of semiconductor substrate **30**.

[0022] Please refer to FIG. **5**, an etch process, preferably a phosphoric acid treatment, is performed to remove the sacrificial layer **52**. Since the sacrificial layer **52** and the first spacers **502**A, **502**B of the first preferred embodiment substantially comprise silicon nitride, the sacrificial layer **52** and the first spacers **502**A, **502**B are simultaneously removed during the etch process.

[0023] As shown in FIG. **6**, a second ion implantation process is performed to form an n-type lightly doped drain (NLDD) **60** beside the gate structure **36**B in the P well **34**. The formation of the NLDD **60** may use the same fabrication processes as the first ion implantation shown in FIG. **1**. For instance, a patterned photoresist (not shown) is formed to protect the N well **32** and the gate structure **36**A in the PMOS transistor region **31**. Then, the second ion implantation process is performed to implant dopants into the P well **34**. In addition, a rapid thermal process is optionally performed after the formation of the NLDD **60** to activate the dopants.

[0024] As shown in FIG. **7**, at least a second spacer **512**A, **512**B is formed on the sidewalls of the gate structures **36**A, **36**B. The processes of forming the second spacers are the same as those processes for forming the first spacers **502**A, **502**B. A third implant process is performed to form a respective source/drain **64**A in the PMOS transistor region **31**, and a respective source/drain **64**B in the NMOS transistor region **33**. The processes of forming the source/drain **64**A, **64**B are well known, and will not be described in detail. In addition, a self-aligned silicide process (salicide process) is optionally performed. A metal layer, including titanium (Ti), cobalt (Co), nickel (Ni), palladium (Pd), platinum (Pt) or the like, is deposited. And a rapid thermal process is performed to form a silicide layer (not shown) on the surfaces of the source/drain **64**A, **64**B.

[0025] A deposition process is performed to form a contact etch stop layer (CESL) **66** on the surface of the gate structures **36**A, **36**B, the second spacers **512**A, **512**B, and the sources/drains **64**A, **64**B. The material of the CESL **66** may include a dielectric material or a strained silicon material, i.e. silicon nitride. Additionally, an inter-layer dielectric (ILD) layer (not shown) and a patterned photoresist (not shown) are formed, and an anisotropic etching process is performed using the patterned photoresist as an etching mask to form a plurality of contact holes (not shown) in the ILD layer and the CESL **66**. The contact holes are the connections between the gate structures **36**A, **36**B or the sources/drains **64**A, **64**B with other electrical devices.

[0026] Please refer to FIG. **8**, which shows a flow diagram illustrating a method of forming a CMOS transistor in accordance with the first preferred embodiment of the present embodiment. The steps of the first preferred embodiment are illustrated as follows:

[0027] Step **700**: providing a semiconductor substrate having a PMOS transistor, a NMOS transistor, and a plurality of gate structures formed in the PMOS transistor and the NMOS transistor;

[0028] Step **701**: forming at least a thermal oxide layer on the sidewalls of the gate structures;

[0029] Step **702**: performing a first ion implantation process to form a PLDD in the semiconductor substrate beside the gate structures of the PMOS transistor;

[0030] Step **703**: forming a sacrificial layer on the PMOS transistor and the NMOS transistor and patterning the sacrificial layer;

[0031] Step **704**: using the patterned sacrificial layer as an etching mask, etching the semiconductor substrate in the PMOS transistor region, and forming an epitaxial layer in the recess, preferably an epitaxial layer of silicon germanium;

[0032] Step **705**: removing the sacrificial layer;

[0033] Step **706**: performing a second ion implantation process to form a NLDD in the semiconductor substrate beside the gate structure of the NMOS transistor;

[0034] Step **707**: forming at least a second spacer on the sidewalls of the gate structures; and

[0035] Step **708**: performing a third ion implantation process to form a respective source/drain in the semiconductor substrate beside the gate structures of the NMOS transistor and the PMOS transistor.

[0036] Accordingly, the formation of the PMOS transistor and the NMOS transistor of a CMOS transistor is nearly finished. A silicide layer, a CESL, and an ILD layer, and contact holes for connecting the components of the CMOS transistor to or other electrical devices may be formed on the CMOS transistor to accomplish the CMOS transistor.

[0037] Moreover, the first preferred embodiment is illustrated using a PMOS transistor as the first active area, and an NMOS transistor as the second active area. In the contrast, the method of the first preferred embodiment can be modified to form a CMOS transistor having an NMOS transistor as the first active area, and a PMOS as the second active area. The first implantation process shown in FIG. **1** is performed to implant corresponding dopants, such as phosphorous (P) or other N-type dopants, into the semiconductor substrate to form a NLDD in the NMOS transistor. As shown in FIG. **4**, the epitaxial layer of silicon carbide is formed. The second implantation process shown in FIG. **6** is performed to implant corresponding dopants, such as boron or other P-type dopants, into the semiconductor substrate to form a PLDD in the PMOS transistor. The following steps for forming the spacers and the source/drain in the PMOS transistors and the NMOS transistors are the same as those steps shown in the aforementioned first preferred embodiment.

[0038] Please refer to FIG. **9** to FIG. **14**, which are schematic diagrams illustrating a method of forming a CMOS transistor according to a second preferred embodiment of the present invention. Some elements are the same as those of the first preferred embodiment and are numbered as those of the first preferred embodiment. Referring to FIG. **9**, a semiconductor substrate **30** is provided. A plurality of first active area and a plurality of second active area are defined on the semiconductor substrate **30**. Each of the first active area includes a first-type well and a gate structure, and each of the second active area includes a second-type well and a respective gate structure thereon. In the second preferred embodiment of the present invention, the first active area is a PMOS transistor region **31**, and the second active area is an NMOS transistor region **33**. Therefore, the first-type well is an N well, and the second-type well is a P well. For the simplicity of description, a gate structure **36**A and an N well **32** formed in the PMOS transistor region **31**, and a gate structure **36**B and a P well **34** in the NMOS transistor region **33** are shown in the diagram in the following.

[0039] As shown in FIG. **9**, a thermal oxidation process to form a thermal oxide layer **501**A, **501**B respectively formed on the sidewalls of the gate structures **36**A, **36**B, and a spacer formation process is performed to form at least a first spacer **502**A, **502**B respectively formed beside the thermal oxide layers **501**A, **501**B. A first ion implantation process is performed to implant dopants, to form an NLDD**1 61** in the NMOS transistor region **33** and a PLDD **48** in the P MOS transistor region **31**. In addition, a rapid thermal process is optionally performed after the formation of the PLDD **48** in order to diffuse and to activate the dopants.

[0040] As shown in FIG. **10**, a sacrificial layer **52**, such as a silicon nitride layer, is formed covering the semiconductor substrate **30**. A second patterned photoresist **54** is formed covering gate structure **36**B and the P well **34**. Please refer to FIG. **11**, an etch process, such as an anisotropic etch process, is performed using the second patterned photoresist **54** as an etching mask to etch the sacrificial layer **52** and the semiconductor substrate **30** beside the gate structure **36**A, which are not covered by the second patterned photoresist **54**. Therefore, a recess **56** is formed on the surface of the N well **32** beside the gate structure **36**A.

[0041] Please refer to FIG. **12** in company with FIG. **11**. The second patterned photoresist **54** is removed. A selective epitaxial growth process is performed to form an epitaxial layer, such as an epitaxial layer **58** of silicon germanium. The preferred epitaxial layer **58** has a lattice constant greater than that of the semiconductor substrate **30**, and is extended approaching to the channel. In order to compress the channel and to keep the silicon layer formed in the following steps from the interface between the source/drain in a distance, the preferred epitaxial layer **58** is slightly projected from the top surface of the semiconductor substrate **30**. The top surface of the epitaxial layer **58** may be substantially leveled with or lower than the top surface of semiconductor substrate **30**.

[0042] Please refer to FIG. **13**, another etch process is performed, preferably a phosphoric acid treatment, to remove the sacrificial layer **52** and the first spacers **502**A, **502**B. In the present embodiment, the sacrificial layer **52** and the first spacers **502**A, **502**B are made of silicon nitride, and so that the sacrificial layer **52** and the first spacers **502**A, **502**B are removed by the phosphoric acid treatment simultaneously. A second ion implantation process is performed to form an NLDD**2 68** in the P well **34** beside the gate structure **36**B. The formation of the NLDD**2 68** may use the same fabrication processes as the first ion implantation by means of forming a patterned photoresist formed to protect the N well **32** and the gate structure **36**A in the PMOS transistor region **31**. Then, the second ion implantation process is performed to implant dopants into the P well **34**. In addition, a rapid thermal process is optionally performed after the formation of the NLDD**2 68** for diffusing and activating the dopants.

[0043] As shown in FIG. **14**, at least a second spacer **512**A, **512**B is formed on the sidewalls of the gate structures **36**A, **36**B. A third implant process is performed to form a respective source/drain **64**A in the PMOS transistor region **31**, and a respective source drain **64**B in the NMOS transistor region **33**. In addition, a self-aligned silicide process is optionally performed to form a silicide layer (not shown) on the surfaces of the gate structures or the source/drain.

[0044] A deposition process is performed to form a CESL **66** on the surface of the gate structures **36**A, **36**B, the second spacers **512**A, **512**B, and the sources/drains **64**A, **64**B. Additionally, an ILD layer (not shown) and a patterned photoresist (not shown) are formed. An anisotropic etching process is performed using the patterned photoresist as an etching mask to form a plurality of contact holes (not shown) in the ILD layer and the CESL **66**. The contact holes are acting as connectors between the gate structures **36**A, **36**B or the sources/drains **64**A, **64**B with other electrical devices.

[0045] FIG. **15** is a flow diagram illustrating a method of forming a CMOS transistor in accordance with the second preferred embodiment of the present embodiment. The steps of the first preferred embodiment are illustrated as follows:

[0046] Step **800**: providing a semiconductor substrate having a PMOS transistor, a NMOS transistor, and a plurality of gate structures formed in the PMOS transistor and the NMOS transistor;

[0047] Step **801**: forming at least a thermal oxide layer on the sidewalls of the gate structures.

[0048] Step **802**: performing a first ion implantation process to form a PLDD in the semiconductor substrate beside the gate structures of the PMOS transistor, and an NLDD**1** in the semiconductor substrate beside the gate structures of the NMOS transistor;

[0049] Step **803**: forming a sacrificial layer and patterning the sacrificial layer;

[0050] Step **804**: using the patterned sacrificial layer as an etching mask, etching the semiconductor substrate beside the gate structure in the PMOS transistor region, and forming an epitaxial layer in the recess, i.e. an epitaxial layer of silicon germanium;

[0051] Step **805**: removing the sacrificial layer;

[0052] Step **806**: performing a second ion implantation process to form an NLDD**2** in the semiconductor substrate beside the gate structure of the NMOS transistor;

[0053] Step **807**: forming at least a second spacer on the sidewalls of the gate structures; and

[0054] Step **808**: performing a third ion implantation process to form a respective source/drain in the semiconductor substrate beside the gate structures of the NMOS transistor and the PMOS transistor.

[0055] Accordingly, the formation of the PMOS transistor and the NMOS transistor of a CMOS transistor is nearly finished. A silicide layer, a CESL, and an ILD layer, and contact holes for connecting the components of the CMOS transistor to or other electrical devices may be formed on the CMOS transistor to accomplish the CMOS transistor.

[0056] In contrast to the first preferred embodiment, the second preferred embodiment forms the NLDD**1** and the PLDD prior to the formation of the recess in the PMOS transistor region. After the epitaxial layer of silicon germanium is formed, the step of removing the sacrificial layer by a phosphoric acid treatment. A part of the heavily doped regions positioned nearby of the semiconductor substrate, such as NLDD**1**, is probably lost during the step of removing the sacrificial layer. To compensate dopant loss of the silicon substrate, a second ion implantation process of the second preferred embodiment is successively performed to implant the corresponding dopants into the substrate, and so that the performance of the second ion implantation processes may compensate the dopant loss during the step of removing the sacrificial layer and to maintain the concentration of the dopants.

[0057] Moreover, the first preferred embodiment is illustrated using a PMOS transistor as the first active area, and an NMOS transistor as the second active area. In the contrast, the method of the first preferred embodiment can be modified to form a CMOS transistor having an NMOS transistor as the first active area, and a PMOS as the second active area. The first implantation process shown in FIG. **9** is performed to implant corresponding dopants, such as boron or other P-type dopants, into the semiconductor substrate to form the PLDD**1** in the PMOS transistor. As shown in FIG. **12**, the epitaxial layer of silicon carbide is formed. The second implantation process shown in FIG. **14** is performed to implant P-type dopants, into the semiconductor substrate to form a PLDD**2** in the PMOS transistor. The following steps of forming the spacers and the source/drain in the PMOS transistors and the NMOS transistors are the same as those steps shown in the aforementioned first preferred embodiment.

[0058] As described above, the method of the present invention is discloses to overcome dopant loss of the semiconductor substrate nearby the surface thereof, wherein the dopant loss is resulted by a phosphoric acid treatment for removing the sacrificial layer. As shown in the first preferred embodiment, the sequence of forming the light doped drain is modified by means of forming the NLDD in the NMOS transistor subsequent to the steps of removing the sacrificial layer and the formation of the epitaxial layer. On the other hand, according to the second preferred embodiment of the present invention, the steps of forming the NLDD**1** and PLDD, including removing the sacrificial layer, and forming of the epitaxial layer, are performed. After that, another ion implantation process is performed to form the NLDD**2** in the NMOS region to compensate the dopant loss nearby the surface of the NMOS transistor. Furthermore, the preferred embodiments of the present invention forms spacers prior to the implantation process for forming the light doped drain. On the other hand, the implantation process for forming the light doped drain in the semiconductor substrate may be performed without forming any spacers on the sidewalls of the gate structures.

[0059] Those skilled in the art will readily observe that numerous modifications and alterations of the device and method may be made while retaining the teachings of the invention.

What is claimed is:

1. A method of forming a CMOS transistor, comprising:

providing a semiconductor substrate having at least a first active area, at least a second active area, and a respective gate structure formed in the first active area and the second active area;

forming a first light doped drain beside the gate structure of the first active area;

forming a sacrificial layer on the semiconductor substrate;

performing an etch process to etch the sacrificial layer formed in the first active area and a surface of the semiconductor substrate beside the gate structure of the first active area and to form at least a recess beside the gate structure of the first active area;

performing a selective epitaxial growth process to form an epitaxial layer in the recess;

removing the sacrificial layer; and

forming a second light doped drain beside the gate structure of the second active area after the sacrificial layer is removed.

2. The method of claim **1**, wherein at least a first spacer is formed on a respective sidewall of the gate structures after the first light doped drain is formed.

3. The method of claim **2**, wherein the first space comprises silicon oxide, silicon nitride, or combinations thereof.

4. The method of claim **2**, wherein at least a second spacer is formed on a respective sidewall of the gate structures after the second light doped drain is formed.

5. The method of claim **4**, wherein a respective source/drain is formed in the first active area and the second active area.

6. The method of claim **1**, wherein the first active area comprises a PMOS transistor region, the second active area comprise an NMOS transistor region, and the epitaxial layer comprises silicon germanium.

7. The method of claim **1**, wherein the first active area comprises an NMOS transistor region, the second active area comprises a PMOS transistor region, and the epitaxial layer comprises silicon carbide.

8. The method of claim **1**, wherein a rapid thermal process is performed subsequent to the formation of the first light doped drain, or the formation of the second light doped region.

9. The method of claim **1**, wherein the sacrificial layer comprises silicon oxide or silicon nitride.

10. A method of forming a CMOS transistor, comprising:

providing a semiconductor substrate having at least a first active area, at least a second active area, and a respective gate structure formed in the first active area and the second active area;

forming a first light doped drain beside the gate structure of the first active area and a second light doped drain beside the gate structure of the second active area;

forming a sacrificial layer on the semiconductor substrate;

performing an etch process to etch the sacrificial layer formed in the first active area and a surface of the semiconductor substrate beside the gate structure of the first active area and to form at least a recess beside the gate structure of the first active area;

performing a selective epitaxial growth process to form an epitaxial layer in the recess;

removing the sacrificial layer;

forming a third light doped drain beside the gate structures of the second active area; and

forming a respective source/drain in the first active area and the second active area.

11. The method of claim **10**, wherein at least a first spacer is formed on a respective sidewall of the gate structures after the first light doped drain is formed.

12. The method of claim **11**, wherein the first space comprises silicon oxide, silicon nitride, or combinations thereof.

13. The method of claim **11**, wherein at least a second spacer is formed on a respective sidewall of the gate structures after the third light doped drain is formed.

14. The method of claim **10**, wherein the first active area comprises a PMOS transistor region, the second active area comprises an NMOS transistor region, and the epitaxial layer comprises silicon germanium.

15. The method of claim **10**, wherein the first active area comprises an NMOS transistor region, the second active area comprises a PMOS transistor region, and the epitaxial layer comprises silicon carbide.

16. The method of claim **10**, wherein a rapid thermal process is performed subsequent to the formation of the first light doped drain, the formation of the second light doped region, or the formation of the third light doped region.

17. The method of claim **10**, wherein the sacrificial layer comprises silicon oxide or silicon nitride.

* * * * *