UNITED STATES PATENT AND TRADEMARK OFFICE

UNITED STATES DEPARTMENT OF COMMERCE
United States Patent and Trademark Office
Address: COMMISSIONER FOR PATENTS
P.O. Box 1450
Alexandria, Virginia 22313-1450
www.uspto.gov

APPLICATION NUMBER	FILING or 371(c) DATE	GRP ART UNIT	FIL FEE REC'D	ATTY.DOCKET.NO	TOT CLAIMS	IND CLAIMS
61/119,920	12/04/2008		135	DYN005.PRV		

CONFIRMATION NO. 6909

UPDATED FILING RECEIPT

OC000000034209580

6980
TROUTMAN SANDERS LLP
BANK OF AMERICA PLAZA
600 PEACHTREE STREET, N.E.
SUITE 5200
ATLANTA, GA 30308-2216

Date Mailed: 01/30/2009

Receipt is acknowledged of this provisional patent application. It will not be examined for patentability and will become abandoned not later than twelve months after its filing date. Any correspondence concerning the application must include the following identification information: the U.S. APPLICATION NUMBER, FILING DATE, NAME OF APPLICANT, and TITLE OF INVENTION. Fees transmitted by check or draft are subject to collection. Please verify the accuracy of the data presented on this receipt. **If an error is noted on this Filing Receipt, please submit a written request for a Filing Receipt Correction. Please provide a copy of this Filing Receipt with the changes noted thereon. If you received a "Notice to File Missing Parts" for this application, please submit any corrections to this Filing Receipt with your reply to the Notice. When the USPTO processes the reply to the Notice, the USPTO will generate another Filing Receipt incorporating the requested corrections**

Applicant(s)

MARK ZEHFUSS, Richmond, VA;

Power of Attorney: None

If Required, Foreign Filing License Granted: 12/29/2008

The country code and number of your priority application, to be used for filing abroad under the Paris Convention, is **US 61/119,920**

Projected Publication Date: None, application is not eligible for pre-grant publication

Non-Publication Request: No

Early Publication Request: No
**** SMALL ENTITY ****
Title

ATTACHMENT FOR A STROLLER

PROTECTING YOUR INVENTION OUTSIDE THE UNITED STATES

Since the rights granted by a U.S. patent extend only throughout the territory of the United States and have no effect in a foreign country, an inventor who wishes patent protection in another country must apply for a patent in a specific country or in regional patent offices. Applicants may wish to consider the filing of an international application under the Patent Cooperation Treaty (PCT). An international (PCT) application generally has the same effect as a regular national patent application in each PCT-member country. The PCT process **simplifies** the filing of patent applications on the same invention in member countries, but **does not result** in a grant of "an international

patent" and does not eliminate the need of applicants to file additional documents and fees in countries where patent protection is desired.

Almost every country has its own patent law, and a person desiring a patent in a particular country must make an application for patent in that country in accordance with its particular laws. Since the laws of many countries differ in various respects from the patent law of the United States, applicants are advised to seek guidance from specific foreign countries to ensure that patent rights are not lost prematurely.

Applicants also are advised that in the case of inventions made in the United States, the Director of the USPTO must issue a license before applicants can apply for a patent in a foreign country. The filing of a U.S. patent application serves as a request for a foreign filing license. The application's filing receipt contains further information and guidance as to the status of applicant's license for foreign filing.

Applicants may wish to consult the USPTO booklet, "General Information Concerning Patents" (specifically, the section entitled "Treaties and Foreign Patents") for more information on timeframes and deadlines for filing foreign patent applications. The guide is available either by contacting the USPTO Contact Center at 800-786-9199, or it can be viewed on the USPTO website at http://www.uspto.gov/web/offices/pac/doc/general/index.html.

For information on preventing theft of your intellectual property (patents, trademarks and copyrights), you may wish to consult the U.S. Government website, http://www.stopfakes.gov. Part of a Department of Commerce initiative, this website includes self-help "toolkits" giving innovators guidance on how to protect intellectual property in specific countries such as China, Korea and Mexico. For questions regarding patent enforcement issues, applicants may call the U.S. Government hotline at 1-866-999-HALT (1-866-999-4158).

LICENSE FOR FOREIGN FILING UNDER

Title 35, United States Code, Section 184

Title 37, Code of Federal Regulations, 5.11 & 5.15

GRANTED

The applicant has been granted a license under 35 U.S.C. 184, if the phrase "IF REQUIRED, FOREIGN FILING LICENSE GRANTED" followed by a date appears on this form. Such licenses are issued in all applications where the conditions for issuance of a license have been met, regardless of whether or not a license may be required as set forth in 37 CFR 5.15. The scope and limitations of this license are set forth in 37 CFR 5.15(a) unless an earlier license has been issued under 37 CFR 5.15(b). The license is subject to revocation upon written notification. The date indicated is the effective date of the license, unless an earlier license of similar scope has been granted under 37 CFR 5.13 or 5.14.

This license is to be retained by the licensee and may be used at any time on or after the effective date thereof unless it is revoked. This license is automatically transferred to any related applications(s) filed under 37 CFR 1.53(d). This license is not retroactive.

The grant of a license does not in any way lessen the responsibility of a licensee for the security of the subject matter as imposed by any Government contract or the provisions of existing laws relating to espionage and the national security or the export of technical data. Licensees should apprise themselves of current regulations especially with respect to certain countries, of other agencies, particularly the Office of Defense Trade Controls, Department of State (with respect to Arms, Munitions and Implements of War (22 CFR 121-128)); the Bureau of Industry and

Security, Department of Commerce (15 CFR parts 730-774); the Office of Foreign AssetsControl, Department of Treasury (31 CFR Parts 500+) and the Department of Energy.

NOT GRANTED

No license under 35 U.S.C. 184 has been granted at this time, if the phrase "IF REQUIRED, FOREIGN FILING LICENSE GRANTED" DOES NOT appear on this form. Applicant may still petition for a license under 37 CFR 5.12, if a license is desired before the expiration of 6 months from the filing date of the application. If 6 months has lapsed from the filing date of this application and the licensee has not received any indication of a secrecy order under 35 U.S.C. 181, the licensee may foreign file the application pursuant to 37 CFR 5.15(b).

JFW

O.I.P.E. IAP95
JAN 16 2009
PATENT & TRADEMARK OFFICE

UNITED STATES PATENT AND TRADEMARK OFFICE

UNITED STATES DEPARTMENT OF COMMERCE
United States Patent and Trademark Office
Address: COMMISSIONER FOR PATENTS
P.O. Box 1450
Alexandria, Virginia 22313-1450
www.uspto.gov

APPLICATION NUMBER	FILING OR 371(C) DATE	FIRST NAMED APPLICANT	ATTY. DOCKET NO./TITLE
61/119,920	12/04/2008	MARK ZEHFUSS	DYN005

CONFIRMATION NO. 6909

FORMALITIES LETTER

6980
TROUTMAN SANDERS LLP
600 PEACHTREE STREET , NE
ATLANTA, GA 30308

OC000000033821602

Date Mailed: 01/02/2009

01/16/2009 SSITHIB1 00000034 61119920

01 FC:2052 25.00 OP

NOTICE TO FILE MISSING PARTS OF PROVISIONAL APPLICATION

FILED UNDER 37 CFR 1.53(c)

Filing Date Granted

An application number and filing date have been accorded to this provisional application. The items indicated below, however, are missing. Applicant is given **TWO MONTHS** from the date of this Notice within which to file all required items and pay any fees required below to avoid abandonment. Extensions of time may be obtained by filing a petition accompanied by the extension fee under the provisions of 37 CFR 1.136(a).

- The provisional application cover sheet under 37 CFR 1.51(c)(1), which may be an application data sheet (37 CFR 1.76), is required identifying:
  - either city and state, or city and foreign country, of the residence of each inventor.

The applicant needs to satisfy supplemental fees problems indicated below.

The required item(s) identified below must be timely submitted to avoid abandonment:

- To avoid abandonment, a surcharge (for late submission of filing fee or cover sheet) as set forth in 37 CFR 1.16(g) of **$25** for a small entity in compliance with 37 CFR 1.27, must be submitted with the missing items identified in this notice.

SUMMARY OF FEES DUE:

Total additional fee(s) required for this application is **$25** for a small entity
- **$25** Surcharge.

Replies should be mailed to:

Mail Stop Missing Parts
Commissioner for Patents
P.O. Box 1450
Alexandria VA 22313-1450

Registered users of EFS-Web may alternatively submit their reply to this notice via EFS-Web.
https://sportal.uspto.gov/authenticate/AuthenticateUserLocalEPF.html

For more information about EFS-Web please call the USPTO Electronic Business Center at **1-866-217-9197** or visit our website at http://www.uspto.gov/ebc.

If you are not using EFS-Web to submit your reply, you must include a copy of this notice.

/mduong/

Office of Data Management, Application Assistance Unit (571) 272-4000, or (571) 272-4200, or 1-888-786-0101

JAN 16 2009
IAP95
PATENT & TRADEMARK OFFICE

PTO/SB/17 (10-08)
Approved for use through 06/30/2010. OMB 0651-0032
U.S. Patent and Trademark Office; U.S. DEPARTMENT OF COMMERCE

Under the Paperwork Reduction Act of 1995 no persons are required to respond to a collection of information unless it displays a valid OMB control number

Effective on 12/08/2004.
Fees pursuant to the Consolidated Appropriations Act, 2005 (H.R. 4818).

FEE TRANSMITTAL
For FY 2009

☑ Applicant claims small entity status. See 37 CFR 1.27

TOTAL AMOUNT OF PAYMENT ($) 25.00

Complete if Known	
Application Number	61/119,920
Filing Date	12/04/2008
First Named Inventor	ZEHFUSS, Mark
Examiner Name	
Art Unit	
Attorney Docket No.	DYN005.PRV

METHOD OF PAYMENT (check all that apply)

☑ Check ☐ Credit Card ☐ Money Order ☐ None ☐ Other (please identify): _____

☐ Deposit Account Deposit Account Number: _____ Deposit Account Name: _____

For the above-identified deposit account, the Director is hereby authorized to: (check all that apply)

☐ Charge fee(s) indicated below
☐ Charge fee(s) indicated below, **except for the filing fee**
☐ Charge any additional fee(s) or underpayments of fee(s) under 37 CFR 1.16 and 1.17
☐ Credit any overpayments

WARNING: Information on this form may become public. Credit card information should not be included on this form. Provide credit card information and authorization on PTO-2038.

FEE CALCULATION

1. BASIC FILING, SEARCH, AND EXAMINATION FEES

Application Type	FILING FEES Fee ($)	FILING FEES Small Entity Fee ($)	SEARCH FEES Fee ($)	SEARCH FEES Small Entity Fee ($)	EXAMINATION FEES Fee ($)	EXAMINATION FEES Small Entity Fee ($)	Fees Paid ($)
Utility	330	165	540	270	220	110	
Design	220	110	100	50	140	70	
Plant	220	110	330	165	170	85	
Reissue	330	165	540	270	650	325	
Provisional	220	110	0	0	0	0	

2. EXCESS CLAIM FEES

Fee Description	Fee ($)	Small Entity Fee ($)
Each claim over 20 (including Reissues)	52	26
Each independent claim over 3 (including Reissues)	220	110
Multiple dependent claims	390	195

Total Claims _____ - 20 or HP = _____ x _____ = _____ (Extra Claims / Fee ($) / Fee Paid ($))

HP = highest number of total claims paid for, if greater than 20.

Indep. Claims _____ - 3 or HP = _____ x _____ = _____ (Extra Claims / Fee ($) / Fee Paid ($))

HP = highest number of independent claims paid for, if greater than 3.

Multiple Dependent Claims Fee ($) _____ Fee Paid ($) _____

3. APPLICATION SIZE FEE

If the specification and drawings exceed 100 sheets of paper (excluding electronically filed sequence or computer listings under 37 CFR 1.52(e)), the application size fee due is $270 ($135 for small entity) for each additional 50 sheets or fraction thereof. See 35 U.S.C. 41(a)(1)(G) and 37 CFR 1.16(s).

Total Sheets _____ - 100 = _____ (Extra Sheets) / 50 = _____ (Number of each additional 50 or fraction thereof) (round up to a whole number) x _____ (Fee ($)) = _____ (Fee Paid ($))

4. OTHER FEE(S)

	Fees Paid ($)
Non-English Specification, $130 fee (no small entity discount)	
Other (e.g., late filing surcharge): late submission of cover sheet/application data sheet	25.00

SUBMITTED BY

Signature		Registration No. (Attorney/Agent) 46,993	Telephone 804-697-1243
Name (Print/Type)	Bernard G. Pike		Date 1-15-2009

This collection of information is required by 37 CFR 1.136. The information is required to obtain or retain a benefit by the public which is to file (and by the USPTO to process) an application. Confidentiality is governed by 35 U.S.C. 122 and 37 CFR 1.14. This collection is estimated to take 30 minutes to complete, including gathering, preparing, and submitting the completed application form to the USPTO. Time will vary depending upon the individual case. Any comments on the amount of time you require to complete this form and/or suggestions for reducing this burden, should be sent to the Chief Information Officer, U.S. Patent and Trademark Office, U.S. Department of Commerce, P.O. Box 1450, Alexandria, VA 22313-1450. DO NOT SEND FEES OR COMPLETED FORMS TO THIS ADDRESS. **SEND TO: Commissioner for Patents, P.O. Box 1450, Alexandria, VA 22313-1450.**

If you need assistance in completing the form, call 1-800-PTO-9199 and select option 2.

O.I.P.E.
JAN 16 2009
IAP95
PATENT & TRADEMARK OFFICE

PTO/SB/92 (12-08)
Approved for use through 01/31/2009. OMB 0561-0031
Patent and Trademark Office; U.S. DEPARTMENT OF COMMERCE
Under the Paperwork Reduction Act of 1995, no persons are required to respond to a collection of information unless it contains a valid OMB control number.

Certificate of Mailing under 37 CFR 1.8

I hereby certify that this correspondence is being deposited with the United States Postal Service with sufficient postage as first class mail in an envelope addressed to:

Commissioner for Patents
P.O. Box 1450
Alexandria, VA 22313-1450

on 1-15-2009.
Date

Bernadette Haxhaj
Signature

Bernadette Haxhaj
Typed or printed name of person signing Certificate

Registration Number, if applicable

804-697-1864
Telephone Number

Note: Each paper must have its own certificate of mailing, or this certificate must identify each submitted paper.

1. Transmittal Form (1 page)
2. Provisional Application Cover Sheet (2 pages)
3. Application Data Sheet (3 pages)
4. Notice to File Missing Parts of Provisional Application (2 pages)
5. Certificate of Mailing (1 page)
6. Fee Transmittal (1 page) / Check ($25.00)
7. Return receipt postcard

Inventor: ZEHFUSS, Mark
Title: Attachment for a Stroller
Patent Application No. 61/119,920
Attorney Docket No.: DYN005.PRV

This collection of information is required by 37 CFR 1.8. The information is required to obtain or retain a benefit by the public which is to file (and by the USPTO to process) an application. Confidentiality is governed by 35 U.S.C. 122 and 37 CFR 1.11 and 1.14. This collection is estimated to take 1.8 minutes to complete, including gathering, preparing, and submitting the completed application form to the USPTO. Time will vary depending upon the individual case. Any comments on the amount of time you require to complete this form and/or suggestions for reducing this burden, should be sent to the Chief Information Officer, U.S. Patent and Trademark Office, U.S. Department of Commerce, P.O. Box 1450, Alexandria, VA 22313-1450. DO NOT SEND FEES OR COMPLETED FORMS TO THIS ADDRESS. **SEND TO: Commissioner for Patents, P.O. Box 1450, Alexandria, VA 22313-1450.**

If you need assistance in completing the form, call 1-800-PTO-9199 and select option 2.

1800724_1.DOC

MOCKINGBIRD ET AL. EX1002

O.I.P.E. IAP95
JAN 16 2009
PATENT & TRADEMARK OFFICE

PTO/SB/21 (12-08)
Approved for use through 01/31/2009. OMB 0651-0031
U.S. Patent and Trademark Office; U.S. DEPARTMENT OF COMMERCE
Under the Paperwork Reduction Act of 1995, no persons are required to respond to a collection of information unless it displays a valid OMB control number.

TRANSMITTAL FORM

(to be used for all correspondence after initial filing)

Total Number of Pages in This Submission	10

Application Number	61/119,920
Filing Date	12/04/2008
First Named Inventor	ZEHFUSS, Mark
Art Unit	
Examiner Name	
Attorney Docket Number	DYN005.PRV

ENCLOSURES *(Check all that apply)*

- [x] Fee Transmittal Form
  - [ ] Fee Attached
- [ ] Amendment/Reply
  - [ ] After Final
  - [ ] Affidavits/declaration(s)
- [ ] Extension of Time Request
- [ ] Express Abandonment Request
- [ ] Information Disclosure Statement
- [ ] Certified Copy of Priority Document(s)
- [x] Reply to Missing Parts/ Incomplete Application
  - [x] Reply to Missing Parts under 37 CFR 1.52 or 1.53
- [ ] Drawing(s)
- [ ] Licensing-related Papers
- [ ] Petition
- [ ] Petition to Convert to a Provisional Application
- [ ] Power of Attorney, Revocation Change of Correspondence Address
- [ ] Terminal Disclaimer
- [ ] Request for Refund
- [ ] CD, Number of CD(s) _____
  - [ ] Landscape Table on CD
- [ ] After Allowance Communication to TC
- [ ] Appeal Communication to Board of Appeals and Interferences
- [ ] Appeal Communication to TC **(Appeal Notice, Brief, Reply Brief)**
- [ ] Proprietary Information
- [ ] Status Letter
- [x] Other Enclosure(s) (please Identify below):

Application Data Sheet (3 pgs)
Provisional Application Cover Sheet (2 pg)
Notice - Missing Part (2 pg)
Cert. of Mailing (1 pg)
Return postcard & check

Remarks

SIGNATURE OF APPLICANT, ATTORNEY, OR AGENT

Firm Name	Troutman Sanders LLP		
Signature			
Printed name	Bernard G. Pike		
Date	1-15-2009	Reg. No.	46,993

CERTIFICATE OF TRANSMISSION/MAILING

I hereby certify that this correspondence is being facsimile transmitted to the USPTO or deposited with the United States Postal Service with sufficient postage as first class mail in an envelope addressed to: Commissioner for Patents, P.O. Box 1450, Alexandria, VA 22313-1450 on the date shown below:

Signature	Bernadette Haxhaj		
Typed or printed name	Bernadette Haxhaj	Date	1-15-09

This collection of information is required by 37 CFR 1.5. The information is required to obtain or retain a benefit by the public which is to file (and by the USPTO to process) an application. Confidentiality is governed by 35 U.S.C. 122 and 37 CFR 1.11 and1.14. This collection is estimated to 2 hours to complete, including gathering, preparing, and submitting the completed application form to the USPTO. Time will vary depending upon the individual case. Any comments on the amount of time you require to complete this form and/or suggestions for reducing this burden, should be sent to the Chief Information Officer, U.S. Patent and Trademark Office, U.S. Department of Commerce, P.O. Box 1450, Alexandria, VA 22313-1450. DO NOT SEND FEES OR COMPLETED FORMS TO THIS ADDRESS. **SEND TO: Commissioner for Patents, P.O. Box 1450, Alexandria, VA 22313-1450.**

If you need assistance in completing the form, call 1-800-PTO-9199 and select option 2.

OIPE IAP85
JAN 16 2009
PATENT & TRADEMARK OFFICE

PTO/SB/16 (12-08)
Approved for use through 06/30/2010. OMB 0651-0032
U.S. Patent and Trademark Office; U.S. DEPARTMENT OF COMMERCE

Under the Paperwork Reduction Act of 1995, no persons are required to respond to a collection of information unless it displays a valid OMB control number.

PROVISIONAL APPLICATION FOR PATENT COVER SHEET – Page 1 of 2

This is a request for filing a PROVISIONAL APPLICATION FOR PATENT under 37 CFR 1.53(c).

Express Mail Label No. _____

INVENTOR(S)

Given Name (first and middle [if any])	Family Name or Surname	Residence (City and either State or Foreign Country)
Mark	Zehfuss	Richmond, Virginia

Additional inventors are being named on the _____ *separately numbered sheets attached hereto.*

TITLE OF THE INVENTION (500 characters max):

Attachment for a Stroller

Direct all correspondence to: **CORRESPONDENCE ADDRESS**

☒ The address corresponding to Customer Number: 06980

OR

☐ Firm or Individual Name

Address

City	State	Zip
Country	Telephone	Email

ENCLOSED APPLICATION PARTS *(check all that apply)*

☒ Application Data Sheet. See 37 CFR 1.76

☐ CD(s), Number of CDs _____

☐ Drawing(s) *Number of Sheets* _____

☐ Other (specify) _____

☐ Specification (e.g. description of the invention) *Number of Pages* _____

Fees Due: Filing Fee of $220 ($110 for small entity). If the specification and drawings exceed 100 sheets of paper, an application size fee is also due, which is $270 ($135 for small entity) for each additional 50 sheets or fraction thereof. See 35 U.S.C. 41(a)(1)(G) and 37 CFR 1.16(s).

METHOD OF PAYMENT OF THE FILING FEE AND APPLICATION SIZE FEE FOR THIS PROVISIONAL APPLICATION FOR PATENT

☒ Applicant claims small entity status. See 37 CFR 1.27.

☒ A check or money order made payable to the *Director of the United States Patent and Trademark Office* is enclosed to cover the filing fee and application size fee (if applicable).

☐ Payment by credit card. Form PTO-2038 is attached.

☐ The Director is hereby authorized to charge the filing fee and application size fee (if applicable) or credit any overpayment to Deposit Account Number: _____ .

25.00

TOTAL FEE AMOUNT ($)

USE ONLY FOR FILING A PROVISIONAL APPLICATION FOR PATENT

This collection of information is required by 37 CFR 1.51. The information is required to obtain or retain a benefit by the public which is to file (and by the USPTO to process) an application. Confidentiality is governed by 35 U.S.C. 122 and 37 CFR 1.11 and 1.14. This collection is estimated to take 8 hours to complete, including gathering, preparing, and submitting the completed application form to the USPTO. Time will vary depending upon the individual case. Any comments on the amount of time you require to complete this form and/or suggestions for reducing this burden, should be sent to the Chief Information Officer, U.S. Patent and Trademark Office, U.S. Department of Commerce, P.O. Box 1450, Alexandria, VA 22313-1450. DO NOT SEND FEES OR COMPLETED FORMS TO THIS ADDRESS. **SEND TO: Commissioner for Patents, P.O. Box 1450, Alexandria, VA 22313-1450.**
If you need assistance in completing the form, call 1-800-PTO-9199 and select option 2.

PTO/SB/16 (12-08)
Approved for use through 06/30/2010. OMB 0651-0032
U.S. Patent and Trademark Office; U.S. DEPARTMENT OF COMMERCE
Under the Paperwork Reduction Act of 1995, no persons are required to respond to a collection of information unless it displays a valid OMB control number.

The invention was made by an agency of the United States Government or under a contract with an agency of the United States Government.

- [x] No.
- [ ] Yes, the name of the U.S. Government agency and the Government contract number are: _____

WARNING:

Petitioner/applicant is cautioned to avoid submitting personal information in documents filed in a patent application that may contribute to identity theft. Personal information such as social security numbers, bank account numbers, or credit card numbers (other than a check or credit card authorization form PTO-2038 submitted for payment purposes) is never required by the USPTO to support a petition or an application. If this type of personal information is included in documents submitted to the USPTO, petitioners/applicants should consider redacting such personal information from the documents before submitting them to the USPTO. Petitioner/applicant is advised that the record of a patent application is available to the public after publication of the application (unless a non-publication request in compliance with 37 CFR 1.213(a) is made in the application) or issuance of a patent. Furthermore, the record from an abandoned application may also be available to the public if the application is referenced in a published application or an issued patent (see 37 CFR 1.14). Checks and credit card authorization forms PTO-2038 submitted for payment purposes are not retained in the application file and therefore are not publicly available.

SIGNATURE _____ Date 1-14-2009

TYPED or PRINTED NAME Bernard G. Pike REGISTRATION NO. 46993 *(if appropriate)*

TELEPHONE 804-697-1243 Docket Number: DYN005.PRV

OIPE IAP95
JAN 16 2009
PATENT & TRADEMARK OFFICE

PTO/SB/14 (07-07)
Approved for use through 06/30/2010. OMB 0651-0032
U.S. Patent and Trademark Office; U.S. DEPARTMENT OF COMMERCE

Under the Paperwork Reduction Act of 1995, no persons are required to respond to a collection of information unless it contains a valid OMB control number.

Application Data Sheet 37 CFR 1.76	Attorney Docket Number	DYN005.PRV
	Application Number	61/119,920
Title of Invention	Attachment for a Stroller	

The application data sheet is part of the provisional or nonprovisional application for which it is being submitted. The following form contains the bibliographic data arranged in a format specified by the United States Patent and Trademark Office as outlined in 37 CFR 1.76.
This document may be completed electronically and submitted to the Office in electronic format using the Electronic Filing System (EFS) or the document may be printed and included in a paper filed application.

Secrecy Order 37 CFR 5.2

☐ Portions or all of the application associated with this Application Data Sheet may fall under a Secrecy Order pursuant to 37 CFR 5.2 (Paper filers only. Applications that fall under Secrecy Order may not be filed electronically.)

Applicant Information:

Applicant 1

Applicant Authority ◉ Inventor ◯ Legal Representative under 35 U.S.C. 117 ◯ Party of Interest under 35 U.S.C. 118

Prefix	Given Name	Middle Name	Family Name	Suffix
Mr.	Mark		Zehfuss	

Residence Information (Select One) ◉ US Residency ◯ Non US Residency ◯ Active US Military Service

City	Richmond	State/Province	VA	Country of Residence i	US

Citizenship under 37 CFR 1.41(b) i US

Mailing Address of Applicant:

Address 1	8575 Magellan Parkway		
Address 2	Suite 1000		
City	Richmond	State/Province	VA
Postal Code	23227	Country i	US

All Inventors Must Be Listed - Additional Inventor Information blocks may be generated within this form by selecting the **Add** button. Add

Correspondence Information:

Enter either Customer Number or complete the Correspondence Information section below.
For further information see 37 CFR 1.33(a).

☐ **An Address is being provided for the correspondence Information of this application.**

Customer Number	06980		
Email Address		Add Email	Remove Email

Application Information:

Title of the Invention	Attachment for a Stroller		
Attorney Docket Number	DYN005.PRV	Small Entity Status Claimed	☒
Application Type	Provisional		
Subject Matter	Utility		
Suggested Class (if any)		Sub Class (if any)	
Suggested Technology Center (if any)			
Total Number of Drawing Sheets (if any)		Suggested Figure for Publication (if any)	

OIPE IAP95
JAN 16 2009
PATENT & TRADEMARK OFFICE

PTO/SB/14 (07-07)
Approved for use through 06/30/2010. OMB 0651-0032
U.S. Patent and Trademark Office; U.S. DEPARTMENT OF COMMERCE
Under the Paperwork Reduction Act of 1995, no persons are required to respond to a collection of information unless it contains a valid OMB control number.

Application Data Sheet 37 CFR 1.76	Attorney Docket Number	DYN005.PRV
	Application Number	61/119,920
Title of Invention	Attachment for a Stroller	

Publication Information:

☐ Request Early Publication (Fee required at time of Request 37 CFR 1.219)

☐ **Request Not to Publish.** I hereby request that the attached application not be published under 35 U.S. C. 122(b) and certify that the invention disclosed in the attached application **has not and will not** be the subject of an application filed in another country, or under a multilateral international agreement, that requires publication at eighteen months after filing.

Representative Information:

Representative information should be provided for all practitioners having a power of attorney in the application. Providing this information in the Application Data Sheet does not constitute a power of attorney in the application (see 37 CFR 1.32). Enter either Customer Number or complete the Representative Name section below. If both sections are completed the Customer Number will be used for the Representative Information during processing.

Please Select One:	◉ Customer Number	○ US Patent Practitioner	○ Limited Recognition (37 CFR 11.9)
Customer Number	06980		

Domestic Benefit/National Stage Information:

This section allows for the applicant to either claim benefit under 35 U.S.C. 119(e), 120, 121, or 365(c) or indicate National Stage entry from a PCT application. Providing this information in the application data sheet constitutes the specific reference required by 35 U.S.C. 119(e) or 120, and 37 CFR 1.78(a)(2) or CFR 1.78(a)(4), and need not otherwise be made part of the specification.

Prior Application Status			Remove
Application Number	Continuity Type	Prior Application Number	Filing Date (YYYY-MM-DD)

Additional Domestic Benefit/National Stage Data may be generated within this form by selecting the **Add** button.

Foreign Priority Information:

This section allows for the applicant to claim benefit of foreign priority and to identify any prior foreign application for which priority is not claimed. Providing this information in the application data sheet constitutes the claim for priority as required by 35 U.S.C. 119(b) and 37 CFR 1.55(a).

			Remove
Application Number	Country i	Parent Filing Date (YYYY-MM-DD)	Priority Claimed
			◉ Yes ○ No

Additional Foreign Priority Data may be generated within this form by selecting the **Add** button.

Assignee Information:

Providing this information in the application data sheet does not substitute for compliance with any requirement of part 3 of Title 37 of the CFR to have an assignment recorded in the Office.

Assignee 1

OIPE IAP99
JAN 16 2009
PATENT & TRADEMARK OFFICE

PTO/SB/14 (07-07)
Approved for use through 06/30/2010. OMB 0651-0032
U.S. Patent and Trademark Office; U.S. DEPARTMENT OF COMMERCE
Under the Paperwork Reduction Act of 1995, no persons are required to respond to a collection of information unless it contains a valid OMB control number.

Application Data Sheet 37 CFR 1.76	Attorney Docket Number	DYN005.PRV
	Application Number	61/119,920

Title of Invention	Attachment for a Stroller

If the Assignee is an Organization check here. ☐

Prefix	Given Name	Middle Name	Family Name	Suffix

Mailing Address Information:

Address 1			
Address 2			
City		**State/Province**	
Country i		Postal Code	
Phone Number		Fax Number	
Email Address			

Additional Assignee Data may be generated within this form by selecting the **Add** button.

Signature:

A signature of the applicant or representative is required in accordance with 37 CFR 1.33 and 10.18. Please see 37 CFR 1.4(d) for the form of the signature.

Signature				Date (YYYY-MM-DD)	1-14-2009
First Name	Bernard G.	Last Name	Pike	Registration Number	46993

This collection of information is required by 37 CFR 1.76. The information is required to obtain or retain a benefit by the public which is to file (and by the USPTO to process) an application. Confidentiality is governed by 35 U.S.C. 122 and 37 CFR 1.14. This collection is estimated to take 23 minutes to complete, including gathering, preparing, and submitting the completed application data sheet form to the USPTO. Time will vary depending upon the individual case. Any comments on the amount of time you require to complete this form and/or suggestions for reducing this burden, should be sent to the Chief Information Officer, U.S. Patent and Trademark Office, U.S. Department of Commerce, P.O. Box 1450, Alexandria, VA 22313-1450. DO NOT SEND FEES OR COMPLETED FORMS TO THIS ADDRESS. **SEND TO: Commissioner for Patents, P.O. Box 1450, Alexandria, VA 22313-1450.**

UNITED STATES PATENT AND TRADEMARK OFFICE

UNITED STATES DEPARTMENT OF COMMERCE
United States Patent and Trademark Office
Address: COMMISSIONER FOR PATENTS
P.O. Box 1450
Alexandria, Virginia 22313-1450
www.uspto.gov

APPLICATION NUMBER	FILING OR 371(C) DATE	FIRST NAMED APPLICANT	ATTY. DOCKET NO./TITLE
61/119,920	12/04/2008	MARK ZEHFUSS	DYN005

CONFIRMATION NO. 6909

FORMALITIES LETTER

6980
TROUTMAN SANDERS LLP
600 PEACHTREE STREET , NE
ATLANTA, GA 30308

OC000000033821602

Date Mailed: 01/02/2009

NOTICE TO FILE MISSING PARTS OF PROVISIONAL APPLICATION

FILED UNDER 37 CFR 1.53(c)

Filing Date Granted

An application number and filing date have been accorded to this provisional application. The items indicated below, however, are missing. Applicant is given **TWO MONTHS** from the date of this Notice within which to file all required items and pay any fees required below to avoid abandonment. Extensions of time may be obtained by filing a petition accompanied by the extension fee under the provisions of 37 CFR 1.136(a).

- The provisional application cover sheet under 37 CFR 1.51(c)(1), which may be an application data sheet (37 CFR 1.76), is required identifying:
  - either city and state, or city and foreign country, of the residence of each inventor.

The applicant needs to satisfy supplemental fees problems indicated below.

The required item(s) identified below must be timely submitted to avoid abandonment:

- To avoid abandonment, a surcharge (for late submission of filing fee or cover sheet) as set forth in 37 CFR 1.16(g) of $**25** for a small entity in compliance with 37 CFR 1.27, must be submitted with the missing items identified in this notice.

SUMMARY OF FEES DUE:

Total additional fee(s) required for this application is $**25** for a small entity
- $**25** Surcharge.

Replies should be mailed to:

Mail Stop Missing Parts
Commissioner for Patents
P.O. Box 1450
Alexandria VA 22313-1450

Registered users of EFS-Web may alternatively submit their reply to this notice via EFS-Web.
https://sportal.uspto.gov/authenticate/AuthenticateUserLocalEPF.html

For more information about EFS-Web please call the USPTO Electronic Business Center at **1-866-217-9197** or visit our website at http://www.uspto.gov/ebc.

If you are not using EFS-Web to submit your reply, you must include a copy of this notice.

/mduong/

Office of Data Management, Application Assistance Unit (571) 272-4000, or (571) 272-4200, or 1-888-786-0101

UNITED STATES PATENT AND TRADEMARK OFFICE

UNITED STATES DEPARTMENT OF COMMERCE
United States Patent and Trademark Office
Address: COMMISSIONER FOR PATENTS
P.O. Box 1450
Alexandria, Virginia 22313-1450
www.uspto.gov

APPLICATION NUMBER	FILING or 371(c) DATE	GRP ART UNIT	FIL FEE REC'D	ATTY.DOCKET.NO	TOT CLAIMS	IND CLAIMS
61/119,920	12/04/2008		110	DYN005		

CONFIRMATION NO. 6909

FILING RECEIPT

6980
TROUTMAN SANDERS LLP
600 PEACHTREE STREET , NE
ATLANTA, GA 30308

OC000000033821601

Date Mailed: 01/02/2009

Receipt is acknowledged of this provisional patent application. It will not be examined for patentability and will become abandoned not later than twelve months after its filing date. Any correspondence concerning the application must include the following identification information: the U.S. APPLICATION NUMBER, FILING DATE, NAME OF APPLICANT, and TITLE OF INVENTION. Fees transmitted by check or draft are subject to collection. Please verify the accuracy of the data presented on this receipt. **If an error is noted on this Filing Receipt, please submit a written request for a Filing Receipt Correction. Please provide a copy of this Filing Receipt with the changes noted thereon. If you received a "Notice to File Missing Parts" for this application, please submit any corrections to this Filing Receipt with your reply to the Notice. When the USPTO processes the reply to the Notice, the USPTO will generate another Filing Receipt incorporating the requested corrections**

Applicant(s)

MARK ZEHFUSS, Residence Not Provided;

Power of Attorney: None

If Required, Foreign Filing License Granted: 12/29/2008

The country code and number of your priority application, to be used for filing abroad under the Paris Convention, is **US 61/119,920**

Projected Publication Date: None, application is not eligible for pre-grant publication

Non-Publication Request: No

Early Publication Request: No
**** SMALL ENTITY ****
Title

ATTACHMENT FOR A STROLLER

PROTECTING YOUR INVENTION OUTSIDE THE UNITED STATES

Since the rights granted by a U.S. patent extend only throughout the territory of the United States and have no effect in a foreign country, an inventor who wishes patent protection in another country must apply for a patent in a specific country or in regional patent offices. Applicants may wish to consider the filing of an international application under the Patent Cooperation Treaty (PCT). An international (PCT) application generally has the same effect as a regular national patent application in each PCT-member country. The PCT process **simplifies** the filing of patent applications on the same invention in member countries, but **does not result** in a grant of "an international

patent" and does not eliminate the need of applicants to file additional documents and fees in countries where patent protection is desired.

Almost every country has its own patent law, and a person desiring a patent in a particular country must make an application for patent in that country in accordance with its particular laws. Since the laws of many countries differ in various respects from the patent law of the United States, applicants are advised to seek guidance from specific foreign countries to ensure that patent rights are not lost prematurely.

Applicants also are advised that in the case of inventions made in the United States, the Director of the USPTO must issue a license before applicants can apply for a patent in a foreign country. The filing of a U.S. patent application serves as a request for a foreign filing license. The application's filing receipt contains further information and guidance as to the status of applicant's license for foreign filing.

Applicants may wish to consult the USPTO booklet, "General Information Concerning Patents" (specifically, the section entitled "Treaties and Foreign Patents") for more information on timeframes and deadlines for filing foreign patent applications. The guide is available either by contacting the USPTO Contact Center at 800-786-9199, or it can be viewed on the USPTO website at http://www.uspto.gov/web/offices/pac/doc/general/index.html.

For information on preventing theft of your intellectual property (patents, trademarks and copyrights), you may wish to consult the U.S. Government website, http://www.stopfakes.gov. Part of a Department of Commerce initiative, this website includes self-help "toolkits" giving innovators guidance on how to protect intellectual property in specific countries such as China, Korea and Mexico. For questions regarding patent enforcement issues, applicants may call the U.S. Government hotline at 1-866-999-HALT (1-866-999-4158).

LICENSE FOR FOREIGN FILING UNDER

Title 35, United States Code, Section 184

Title 37, Code of Federal Regulations, 5.11 & 5.15

GRANTED

The applicant has been granted a license under 35 U.S.C. 184, if the phrase "IF REQUIRED, FOREIGN FILING LICENSE GRANTED" followed by a date appears on this form. Such licenses are issued in all applications where the conditions for issuance of a license have been met, regardless of whether or not a license may be required as set forth in 37 CFR 5.15. The scope and limitations of this license are set forth in 37 CFR 5.15(a) unless an earlier license has been issued under 37 CFR 5.15(b). The license is subject to revocation upon written notification. The date indicated is the effective date of the license, unless an earlier license of similar scope has been granted under 37 CFR 5.13 or 5.14.

This license is to be retained by the licensee and may be used at any time on or after the effective date thereof unless it is revoked. This license is automatically transferred to any related applications(s) filed under 37 CFR 1.53(d). This license is not retroactive.

The grant of a license does not in any way lessen the responsibility of a licensee for the security of the subject matter as imposed by any Government contract or the provisions of existing laws relating to espionage and the national security or the export of technical data. Licensees should apprise themselves of current regulations especially with respect to certain countries, of other agencies, particularly the Office of Defense Trade Controls, Department of State (with respect to Arms, Munitions and Implements of War (22 CFR 121-128)); the Bureau of Industry and

Security, Department of Commerce (15 CFR parts 730-774); the Office of Foreign AssetsControl, Department of Treasury (31 CFR Parts 500+) and the Department of Energy.

NOT GRANTED

No license under 35 U.S.C. 184 has been granted at this time, if the phrase "IF REQUIRED, FOREIGN FILING LICENSE GRANTED" DOES NOT appear on this form. Applicant may still petition for a license under 37 CFR 5.12, if a license is desired before the expiration of 6 months from the filing date of the application. If 6 months has lapsed from the filing date of this application and the licensee has not received any indication of a secrecy order under 35 U.S.C. 181, the licensee may foreign file the application pursuant to 37 CFR 5.15(b).

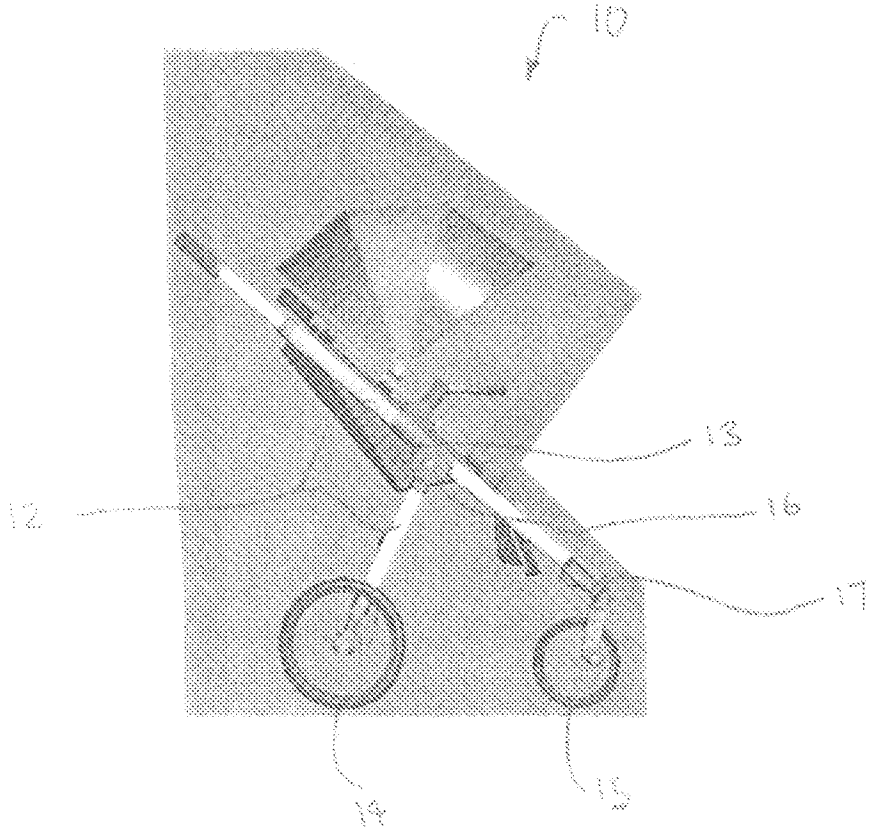

FIGURE 1

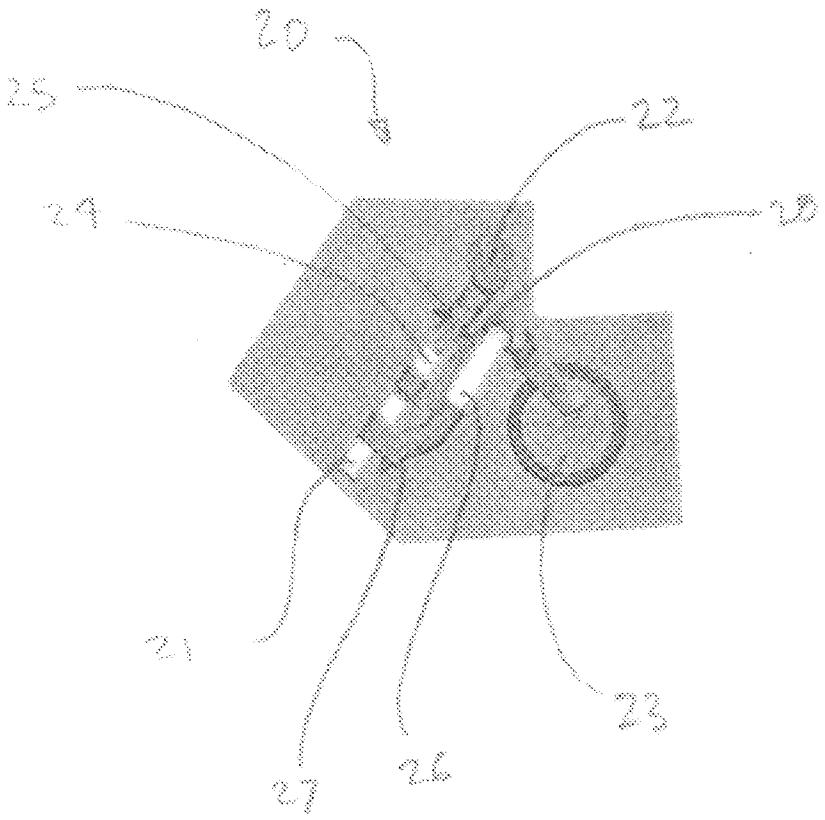

FIGURE 2

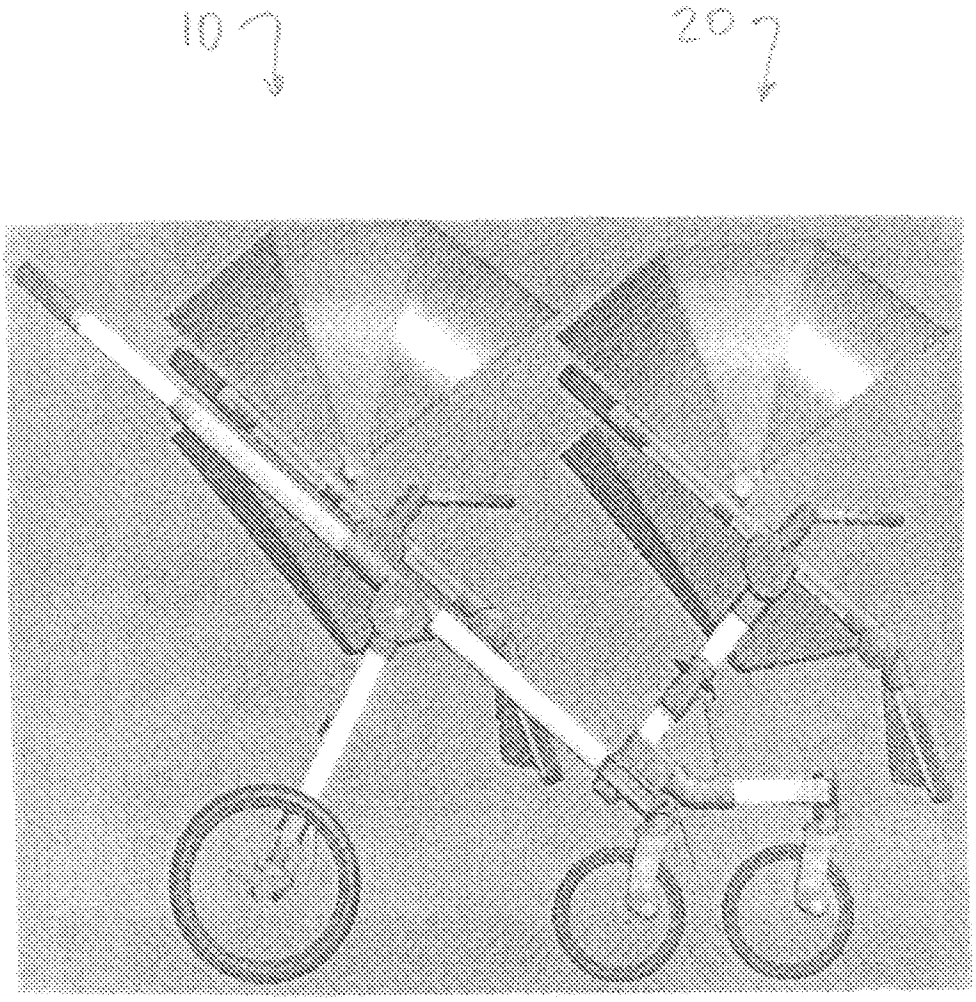

FIGURE 3

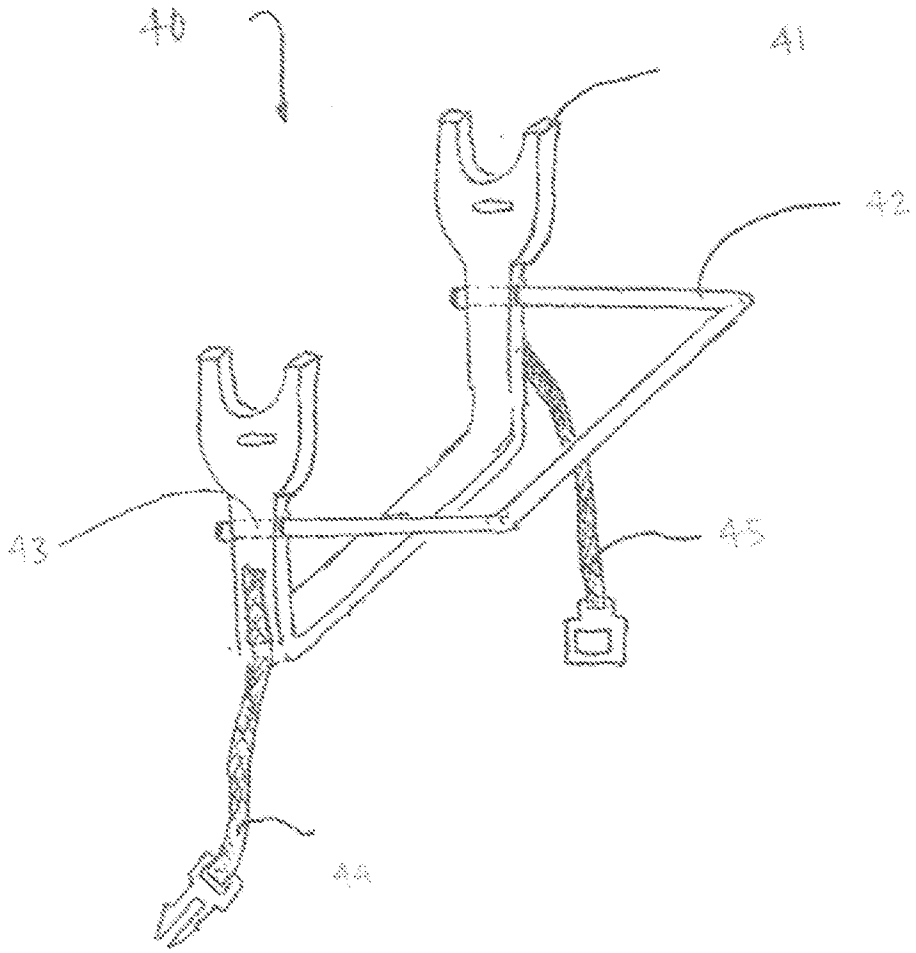

FIGURE 4

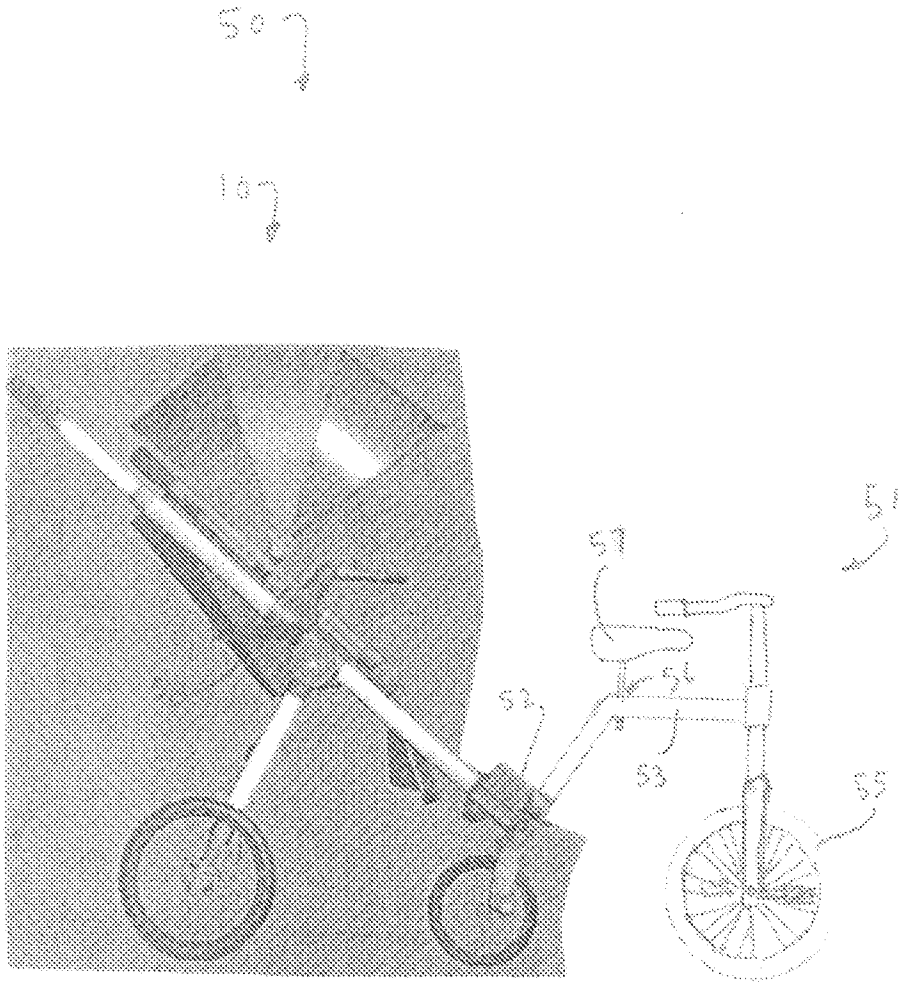

FIGURE 5

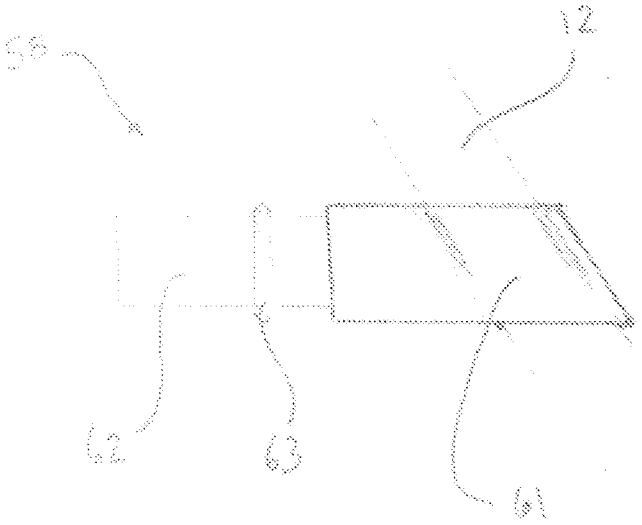

FIGURE 6A

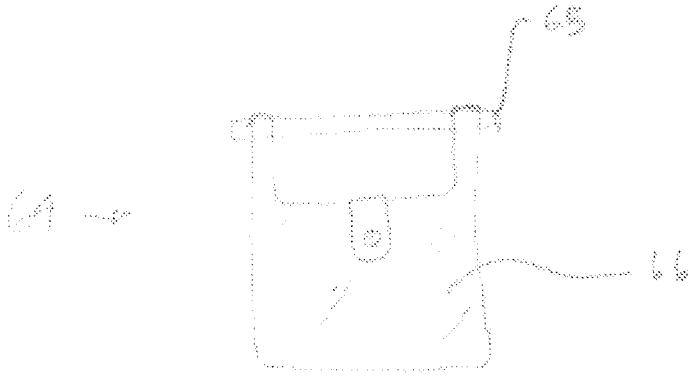

FIGURE 6B

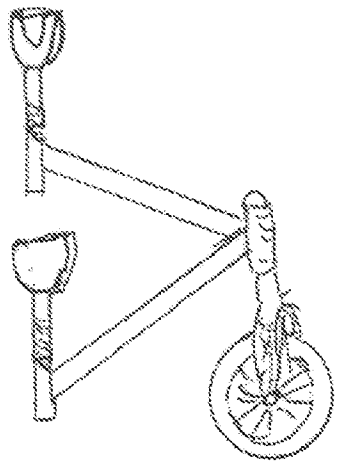

FIGURE 7

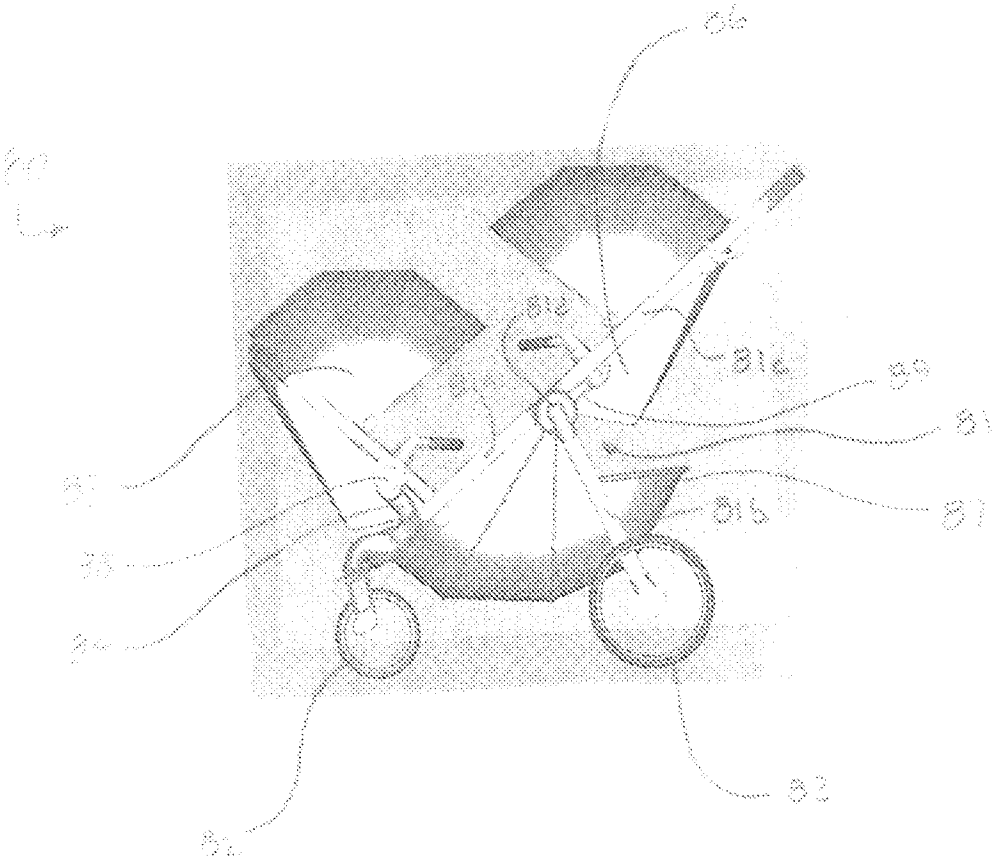

FIGURE 8

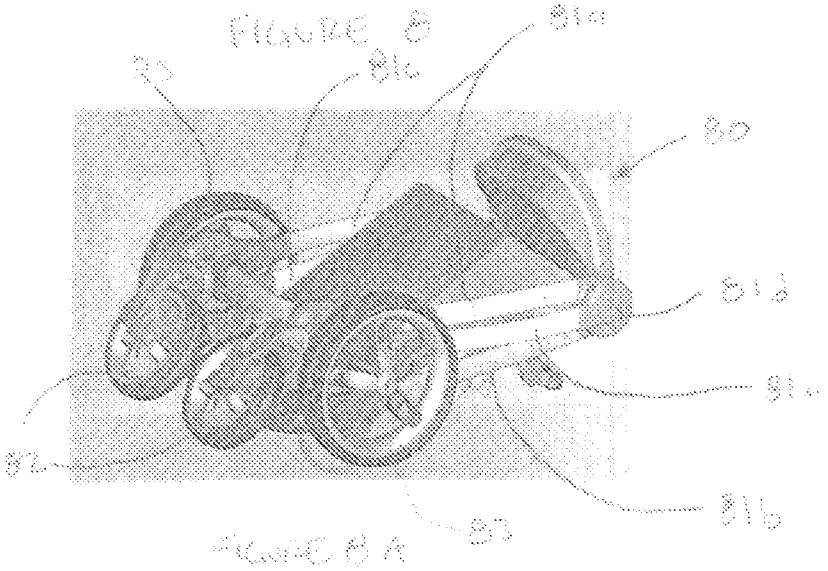

FIGURE 8A

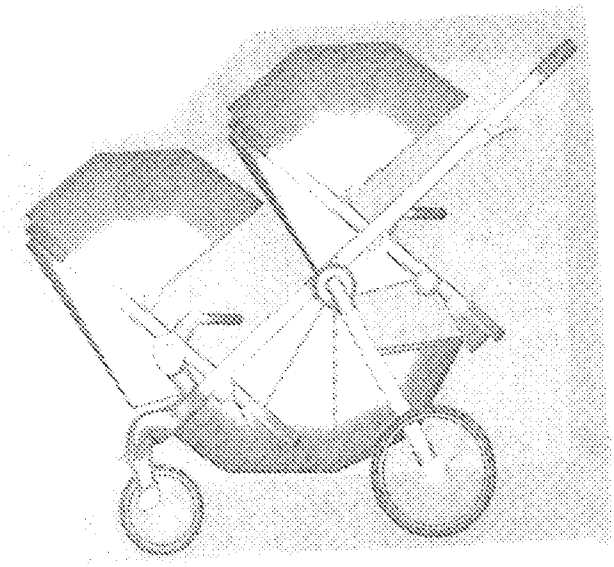

FIGURE 9A

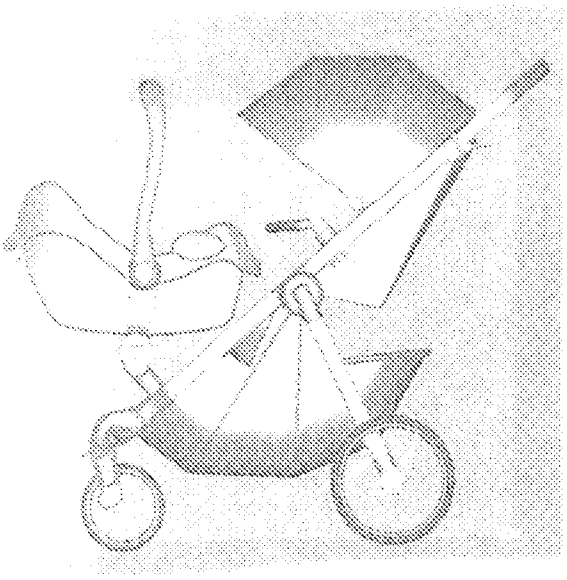

FIGURE 9B

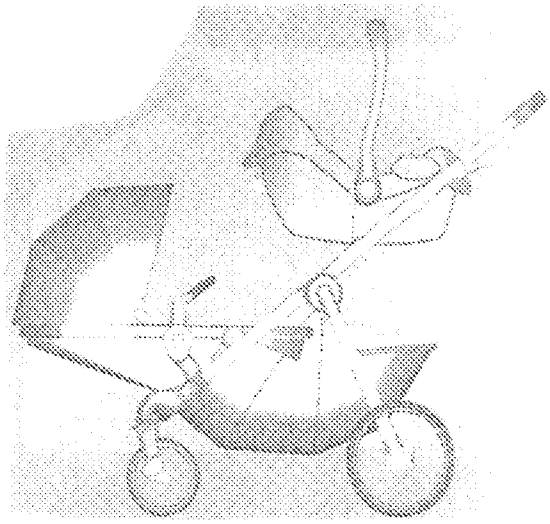

FIGURE 9C

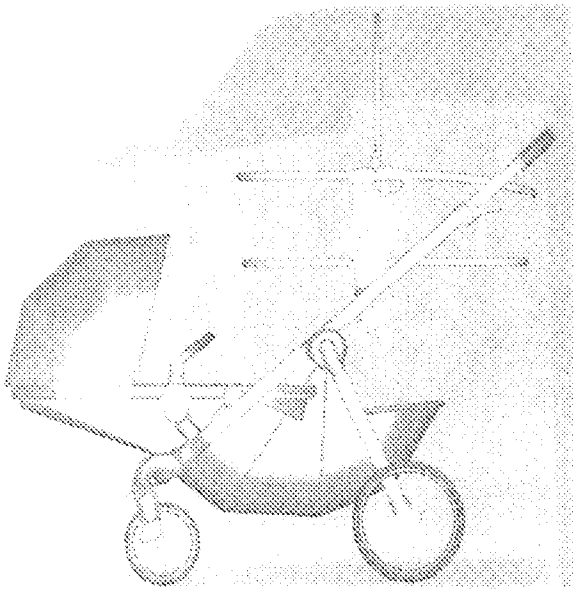

FIGURE 9D

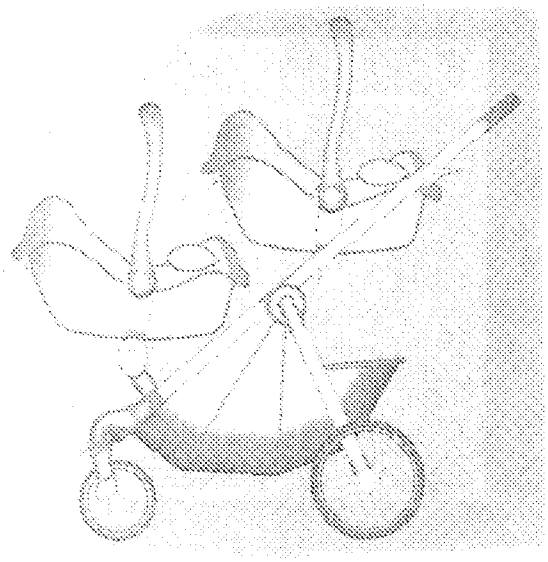

FIGURE 9E

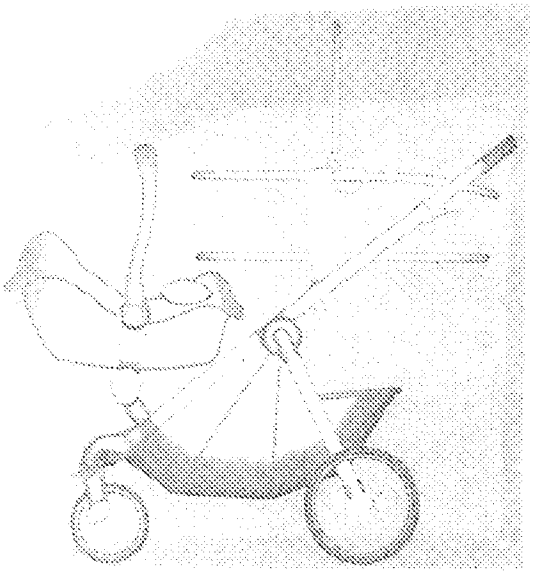

FIGURE 9F

Electronic Patent Application Fee Transmittal

Application Number:	
Filing Date:	
Title of Invention:	ATTACHMENT FOR A STROLLER
First Named Inventor/Applicant Name:	MARK ZEHFUSS
Filer:	Bernard Pike/Josephine Strulson
Attorney Docket Number:	DYN005

Filed as Small Entity

Provisional Filing Fees

Description	Fee Code	Quantity	Amount	Sub-Total in USD($)
Basic Filing:				
Provisional Application filing fee	2005	1	110	110
Pages:				
Claims:				
Miscellaneous-Filing:				
Petition:				
Patent-Appeals-and-Interference:				
Post-Allowance-and-Post-Issuance:				
Extension-of-Time:				

Description	Fee Code	Quantity	Amount	Sub-Total in USD($)
Miscellaneous:				
			Total in USD ($)	**110**

Electronic Acknowledgement Receipt

EFS ID:	4398831
Application Number:	61119920
International Application Number:	
Confirmation Number:	6909
Title of Invention:	ATTACHMENT FOR A STROLLER
First Named Inventor/Applicant Name:	MARK ZEHFUSS
Customer Number:	06980
Filer:	Bernard Pike/Josephine Strulson
Filer Authorized By:	Bernard Pike
Attorney Docket Number:	DYN005
Receipt Date:	04-DEC-2008
Filing Date:	
Time Stamp:	16:44:46
Application Type:	Provisional

Payment information:

Submitted with Payment	yes
Payment Type	Deposit Account
Payment was successfully received in RAM	$110
RAM confirmation Number	2157
Deposit Account	201507
Authorized User	

The Director of the USPTO is hereby authorized to charge indicated fees and credit any overpayment as follows:

Charge any Additional Fees required under 37 C.F.R. Section 1.21 (Miscellaneous fees and charges)

File Listing:

Document Number	Document Description	File Name	File Size(Bytes)/ Message Digest	Multi Part /.zip	Pages (if appl.)
1	Specification	DYN005.pdf	15872110 7ad7de3ac3681b48db0c23d7da41bfa426278ff7	no	26
Warnings:					
Information:					
2	Fee Worksheet (PTO-06)	fee-info.pdf	29353 64e4cc6149348c74ae286e5ed2c3a8a28e9e7af1	no	2
Warnings:					
Information:					
			Total Files Size (in bytes):	15901463	

This Acknowledgement Receipt evidences receipt on the noted date by the USPTO of the indicated documents, characterized by the applicant, and including page counts, where applicable. It serves as evidence of receipt similar to a Post Card, as described in MPEP 503.

New Applications Under 35 U.S.C. 111
If a new application is being filed and the application includes the necessary components for a filing date (see 37 CFR 1.53(b)-(d) and MPEP 506), a Filing Receipt (37 CFR 1.54) will be issued in due course and the date shown on this Acknowledgement Receipt will establish the filing date of the application.

National Stage of an International Application under 35 U.S.C. 371
If a timely submission to enter the national stage of an international application is compliant with the conditions of 35 U.S.C. 371 and other applicable requirements a Form PCT/DO/EO/903 indicating acceptance of the application as a national stage submission under 35 U.S.C. 371 will be issued in addition to the Filing Receipt, in due course.

New International Application Filed with the USPTO as a Receiving Office
If a new international application is being filed and the international application includes the necessary components for an international filing date (see PCT Article 11 and MPEP 1810), a Notification of the International Application Number and of the International Filing Date (Form PCT/RO/105) will be issued in due course, subject to prescriptions concerning national security, and the date shown on this Acknowledgement Receipt will establish the international filing date of the application.

TITLE

ATTACHMENT FOR A STROLLER

INVENTOR

Mark Zehfuss

TECHNICAL FIELD

[0001] The invention is directed to an attachment for a stroller. Preferably the attachment comprises a seat. Such an attachment may be used to convert a single stroller into a double stroller. More specifically, embodiments of the invention are directed to an attachment for a stroller capable of supporting a seat such as, but not limited to, a stroller seat, a baby seat, bassinet, a pram, a car seat, or a baby carrier, for example. Embodiments of the attachment are capable of reversibly converting a single stroller into a double stroller.

BACKGROUND

[0002] Parents with multiple young children may have difficulty transporting their children from place to place. Children are slow, easily distracted and, therefore, may lag behind their parents while the parents are trying to complete shopping tasks or get exercise in a limited amount of time. In response, many parents have purchased double strollers allowing the parent or other guardian to push two children simultaneously and thus allow them to more efficiently run errands, take walks, or jog. As such, a double stroller allows the parents or guardians more freedom than they would have with only a single stroller, especially while trying to manage two sleeping children.

[0003] Though double strollers have certain advantages, double strollers also have disadvantages. Double strollers are substantially larger than single strollers and are, therefore, more difficult to maneuver through doors and down aisles in stores. Typically, the benefits of being able to accommodate two children greatly offset these disadvantages. However, when the parent or guardian has only one child with them, the benefits of the double stroller are not realized but the disadvantages still exist.

[0004] Therefore, parents often buy two or more strollers to use at different times; a single stroller for times when they only have one child with them and a double stroller for when they need a stroller that will accommodate two children. This often creates its own set of problems. The multiple strollers must be stored and there is seldom room for both a folded double stroller and a folded single stroller in the trunk of a typical car or back of a sport utility vehicle.

[0005] Stroller manufacturers have attempted to solve this problem by providing a place for a second child to stand on the back of a single stroller or attachments that provide another seat for the second child that hangs under and slightly behind the seat of the single stroller. This provides a second seat for a child but the child is tucked close to the back of the front seat which may be uncomfortable, reduce the capacity of the under seat storage, and prevent the parent from hanging a bag on the handle bars.

[0006] There exists a need for a single stroller that may be conveniently converted to a double stroller. There is also a need for a conversion kit that converts the single stroller into a full double stroller that is capable of accommodating two children without loss of convenience for the parent or guardian.

SUMMARY OF THE INVENTION

[0007] As used herein, a double stroller is a stroller that has two or more seats for carrying two or more children simultaneously.

BRIEF DESCRIPTION OF THE FIGURES

[0008] Figure 1 shows an embodiment of a single stroller;

[0009] Figure 2 shows an embodiment of a seat attachment to convert a single stroller into a double stroller;

[0010] Figure 3 shows the combination of the single stroller of Figure 1 attached to the seat attachment of Figure 2;

[0011] Figure 4 shows an embodiment of a seat attachment capable of supporting a car seat on an attachment of Figure 2;

[0012] Figure 5 shows a combination of the single stroller of Figure 1 attached to an embodiment of the attachment in the form of a tricycle-like riding device; and

[0013] Figure 6A shows an accessory attachment for supporting an accessory on a stroller; Figure 6B shows a bag or purse for attaching to the accessory attachment of Figure 6A.

[0014] Figure 7 shows an attachment for supporting a seat comprising one wheel.

[0015] Figure 8 shows an embodiment of a stroller reversibly that is capable of being converted from a single stroller to a double stroller comprising an attachment portion that does not comprise a wheel.

[0016] Figures 9A, 9B, 9C, 9D, 9E, and 9F show various configurations of the embodiments of the stroller shown in Figure 8.

DESCRIPTION

[0017] The invention relates to an accessory, attachment, or conversion kit (hereinafter "attachment") for a stroller. As discussed above, parents or guardians may find themselves in a situation wherein it is more convenient to fit two children in a stroller, but at the same time find it inconvenient to have both a single and double stroller. Embodiments of the attachment solve this problem. In one aspect, an embodiment of the attachment for a stroller is capable of converting a single stroller into a double stroller. The attachment may support a seat such as, but not limited to, a stroller seat, a baby seat, a bassinet, a pram, a baby carrier, or a car seat, for example. Therefore, the parent or guardian does not require both a single stroller and a double stroller. A stroller configured to receive an attachment for converting a single stroller into a double stroller would provide convenience to the user. As such, an embodiment of the attachment for converting a single stroller into a double stroller comprises at least one attachment portion capable of connecting to a stroller frame and a seat attachment element capable of supporting a seat. The attachment may optionally comprise at least one wheel for additional support, however, for more convenience, embodiments of the attachment do not include a wheel. In certain embodiments, a wheel may stabilize the double stroller, but in other embodiments of the attachment the wheel may not be desirable or necessary. Additional embodiments of the attachment comprise a cart, wagon, tricycle-like attachment, or other riding toy that may be connected to the stroller, for example. A tricycle-like attachment would allow a child to ride or be pushed in front of the stroller.

[0018] A side view of an embodiment a single stroller 10 is shown in Figure 1. As a note, Figure 1 shows only one side of the single stroller 10, however, most components include a

complementary component on the other side of the single stroller but are not shown in Figure 1. The single stroller 10 comprises a frame 12 that supports seat 13. The frame 12 may, optionally, include a folding mechanism 16 that allows the stroller 10 to be folded to a more convenient size for storing or transporting the stroller 10.

[0019] In this embodiment, the seat 13 is shown as a typical stroller seat, however, other types of seats may be used in a single stroller such as, but not limited to, a baby seat, a bassinet, a pram, a car seat, or other baby carrier. The seat 13 may be permanently affixed to the frame 12 or releasably connected such that it is capable of being removed and substituted with a different seat. As used herein, "releasably connected" or "releasably attached" means the connection is not a permanent connection and that the connection is capable being of connected and disconnected by the user of the stroller without requiring special tools or special skills. Releasable connections include, but are not limited to, buttons, snaps, friction fittings, interference fits, threaded connections, locking tabs, keyed connections, other fasteners, or the like. On stroller 10 of Figure 1, the frame 12 is supported on a pair of back wheels 14 and a pair of front wheels 15. In this embodiment, back wheels 14 are fixed and do not swivel or pivot on the frame. The pair of front wheels 15 on the single stroller 10 pivot to make turning the single stroller 10 easier and more convenient. Though, pivoting wheels may be preferred in certain strollers, strollers with fixed non-pivoting wheels are also common. It should be noted that a single stroller does not require pairs of front or rear wheels and either the front pair of wheels 15 or the back pair of wheels 14 may be substituted with a single wheel. Conventionally, many single strollers, including umbrella strollers, jogging strollers, all-terrain strollers, as well as other strollers may only include one front wheel. Embodiments of the attachment of the invention may be capable of converting any style of stroller to a double stroller, including strollers with one or two front wheels.

[0020] The embodiment of the stroller 10 comprises two connector portions 17. The connector portions are preferably on the front of the stroller to allow the attachment and the seat to be connected to the front of the stroller 10. The connector portions 17 allow an attachment such as a conversion kit for converting the single stroller 10 to a double stroller, as shown in Figure 3, to be connected to the stroller. The embodiment of the stroller 10 has a left side and right side connector portions 17. An embodiment of an attachment of stroller 10 will comprise corresponding attachment portions capable of connecting to the stroller frame at the connector

portions 17. Though the attachment for the stroller is described in relation to a single stroller, the attachment may similarly be attached to a double stroller. Embodiments of the attachment may therefore be used to convert a double stroller into a triple stroller, if desired. Further embodiments of the attachment may comprise at least one connector portion so that a second attachment may be added to the first attachment.

[0021] An embodiment of an attachment 20 of the invention is shown in Figure 2. The attachment of Figure 2 is in an unlocked and folded configuration. The attachment 20 comprises a pair of attachment portions 21 capable of connecting to the stroller frame 12, two seat attachment elements 22 capable of supporting a seat; and a wheel 23. In this embodiment, the attachment portions are connected to the rear of the attachment 20 allowing the attachment 20 to be connected to the front of a stroller, such as stroller 10 shown in Figure 1. Other embodiments of the stroller attachment may include more than one wheel, one attachment element, one seat attachment element, or combinations of these elements, for example or may not include a wheel. In an embodiment of the stroller with one wheel, the connector portion may be on the forks of the front wheel, for example.

[0022] The attachment 20 comprises a wheel support frame 26 connecting the wheel 23 to the attachment frame member 24 of the attachment 20. Each attachment frame member 24 has a first and a second end. The first end is capable of connecting to a stroller frame and the second end is connected to the seat attachment member 22. The embodiment of the attachment 20 comprises a wheel support frame 26 that is pivotally connected to two attachment frame members 24. The wheel support frame 26 may span the width of the stroller connecting the two attachment frame members 44. The pivotal connection 27 allows the attachment to be folded and conveniently stored or transported but is not necessary for the invention. The pivotal connection is optional and provides more convenience, however, embodiments of the attachment may comprise a releasably connected wheel support frame or a rigid frame that may be incorporated to produce an attachment that has greater strength for use in situations wherein a stronger attachment may be desired such as with all-terrain or jogging strollers, for example. The wheel support frame may be connected at any point on the attachment frame, preferably the wheel support frame is connected near the attachment portion 21 or near the middle of the attachment frame 24.

[0023] An embodiment of the attachment without a wheel may include attachment portion 21 or attachment frame member 24, and seat attachment member 22, for example. In such an embodiment, there would be no need for pivotal connection 27, wheel support, frame 26, sliding connector 25, or wheel 23.

[0024] The attachment 20 comprises a folding mechanism comprising a sliding connector 25 connected to a first end of strut 28. A second end of strut 28 is pivotally connected to wheel support frame 26. In such an embodiment, the sliding connector 25 may be moved between a first position and a second position on the attachment frame 24. As the sliding connector 25 is moved, strut 28 pushes the wheel support frame 26 from an in-use position to a storage position. The storage position is more compact as shown in Figure 2. In addition, the embodiment of the attachment 20 comprises a locking mechanism 27 that is capable of securing the attachment 20 to a stroller, such as stroller 10 shown in Figure 1. The locking mechanism 27 is engaged by moving the sliding connector 25 to the in-use position in which the wheel support frame 28 and wheel 23 are extended. In an embodiment of the attachment 20 for the stroller 10, the wheel of the attachment 20 is pivotally connected to the attachment portion and when the wheel is in the in-use position the releasable connection is locked and when the wheel 23 is moved to the storage position, the releasable connection is unlocked allowing the attachment 20 to be removed from stroller 10. The attachment 20 may be stored and stroller 10 may be conveniently used as a single stroller. As designed, the attachment 20 may be reconnected to stroller 10 for use as a double stroller. In any embodiment of the invention, the attachment portion may be secured into position on the stroller frame. Either the attachment or the stroller frame may comprise a locking mechanism for securing the stroller and attachment together. The locking mechanism may be any mechanism capable of securing the components together during use and may be a friction locking device or an interference locking device such as a pin in a hole or slot, for example.

[0025] The attachment portion 21 of the embodiment of the attachment 20 has a cylindrical shape. The attachment portion 21 may be inserted into a cylindrical recess of the connector portion 17 of stroller 10 of Figure 1 to secure the attachment and convert the single stroller into a double stroller, as shown in Figure 3. Other embodiments of the attachment may include any type of attachment portion. The attachment portion may be of a solid or tubular construction and may be any cross-sectional shape including, but not limited to, circular,

polygonal, square, rectangular, and triangular, for example. Other attachment mechanisms may be utilized to connect the attachment to the stroller such as, but not limited to, a U-shaped bracket, a U-bolt, a pipe clamp, O-shaped bracket, screw, bolt, or other clamping or attachment means.

[0026] In Figure 3, the attachment 20 of Figure 2 is shown connected to the single stroller 10 of Figure 1 forming a double stroller. The double stroller configuration is shown with two stroller seats in an inline configuration, though the other configurations, such as a stroller seat and a bassinet or a pram may also be supported on the double stroller. Further, the seat attachment element of the attachment may be capable of supporting the front stroller seat in either a forward or backward position.

[0027] The embodiment of the stroller 10 is shown only as an example of one type of stroller, the frame of the stroller may be any configuration. Embodiments of the accessory of the invention may be configured to be used on any such configuration of a stroller. For example, a different embodiment of the baby stroller may not include two front wheels, may not include a folding mechanism or may only include only one folding mechanism. In addition, the baby stroller may include additional features not included in baby stroller 10. For example, the stroller may optionally comprise fixed front wheels, an entirely different frame configuration, or a storage basket underneath the seat of the stroller.

[0028] The seat attachment member may be any configuration capable of supporting the seat on the attachment. Another embodiment of a seat attachment member for use with a car seat or other baby seat is shown in Figure 4. The embodiment of the seat attachment member 40 of Figure 4 comprises a main support 41. The main support 41 comprises a cradle for supporting a central portion of the seat. Another portion of the seat may rest against support bar 42. In this embodiment, support bar 42 may be adjusted to accommodate seats of different shapes and sizes. Support bar 42 may be slid within aperture 43 and locked in place when in the desired position to support a certain seat. The seat is, therefore, supported on two main supports 41 and support bar 42. The seat may be further secured in the seat attachment member 40 by wrapping belts 44 and 45 around the seat and locking the belts in this position with a buckle or other securing means.

[0029] Another embodiment of an attachment for a stroller is shown in Figure 5. The combination 50 comprises stroller 10 and attachment 51. Attachment 51 is a tricycle-like attachment comprising an attachment portion 52, a frame 53 with a seat attachment portion 56, a

seat 57, and wheel 55. The tricycle-like attachment may be attached to stroller 10 to allow one child to be pushed in the stroller 10 and one child to ride the attachment 51. The attachment may be other shapes also such as cars, trucks, or animal shapes, for example.

[0030] The embodiment of the stroller 10 of Figure 5 comprises an additional accessory attachment portion 58. The accessory attachment portion 58 attaches to a frame member of stroller 10. An embodiment of the accessory attachment portion 58 is shown on Figure 6A. This embodiment is particularly useful for attaching a bag or purse 64, as shown in Figure 6B, to stroller 10.

[0031] When using a stroller, parents or guardians typically carry other items, such as purses, grocery bags, cell phones, diapers, cleaning wipes, or other personal or baby related items. Some strollers have bottom storage baskets for placing such items. However, these storage baskets can be inconvenient to access or some light weight strollers do not include such storage. Therefore, users of the stroller may hang purses or shopping bags on the handle of the stroller. This is convenient in that the bag is easy to access, but the weight of the bag on the handle may cause the stroller to be unbalanced and increase the tendency of the stroller to topple backwards. A heavy bag hung from the handle of a stroller may cause the stroller to tip backwards even with a child in the seat. The problem is worse if the stroller is facing uphill, on uneven terrain, being pushed up a curb, or occupied by a small child. The attachment portion may be attached to the frame of a stroller by any of the clamping or attachment methods described above, for example. Preferably, accessory attachment 58 is attached near the center of gravity of the stroller 10 to avoid creating an unbalanced condition of the stroller. An embodiment of the accessory attachment 58 is shown in Figure 6A. Accessory attachment 58 is shown connected to stroller frame 12 of stroller 10 in Figure 1 near the folding mechanism. Embodiments of the accessory comprise a first end 61 for connecting to a stroller frame and a second end 62 for releasably connecting to the accessory. The accessory attachment 58 may, optionally, comprise a rib for securing the accessory to the accessory attachment 58. The rib as shown in Figure 6A may be replaced with any other locking element or securing means including a friction fitting, a screwed fitting, interference fitting, for example.

[0032] One example of an accessory for attaching to an accessory attachment 58 is shown in Figure 6B. The accessory is a bag or purse 64. The accessory includes an attachment portion 65 that is capable of being secured to the attachment portion 62 on the accessory

attachment 58. The bag or purse 64 may be secured on stroller 10 by securing attachment portion 65 to attachment portion 62. The attachment portion 65, as shown, slides over the cylindrical attachment portion 62 of accessory attachment 58. Attachment portion 65 may include an interior annular recess that receives rib 63 securing the bag or purse 58 to stroller 10. The bag or purse 64 is thus secured to the stroller 10 in a center portion of the stroller as viewed from the side. Therefore, the bag or purse 64 is conveniently secured to stroller 10 while not contributing to an unbalanced condition of the stroller 10.

[0033] A further embodiment of the stroller 80 is shown in Figure 8. Stroller 80 may be easily converted from a single stroller comprising one seat to a double stroller comprising two seats without addition of another wheel on the attachment. Stroller 80 comprises a frame 81 capable of supporting the stroller seat 86. In this embodiment, the frame 81 comprises a front wheel support portion 81a, a back wheel support portion 81b, and a handle portion 81c. The frame 81 of the embodiment of the stroller 80 further comprises a folding mechanism 81d that connects front wheel support portion 81a, a back wheel support portion 81b, and a handle portion 81c. The folding mechanism 81d allows the stroller to be folded in a more compact size for storing or transportation. Figure 8A shows stroller 80 in a folded configuration.

[0034] Stroller 80 further comprises at least one front wheel 82 (both front wheels 82 of stroller 80 may be seen in Figure 8A), at least one rear wheel 83 (both rear wheels 83 of stroller 80 may be seen in Figure 8A), a stroller seat 86, and a seat attachment portion 84 capable of supporting a second seat in front of the stroller seat. The stroller 80 may further comprise a storage basket 87. Seat attachment portion may be of any design capable of securely supporting a seat on the stroller. Preferably, the seat attachment portion is capable of supporting a seat such that a child in the seat is substantially above the frame of the stroller. This provides easier access to the seat, does not block access to the storage basket, allows more versatile configurations of the seats, allows more variety of seats to be attached to the frame, and allows the parent or other guardian to more easily monitor and see the child in each seat.

[0035] Stroller 80 comprises a stroller seat 86. The stroller seat 86 is located adjacent to handle portion 81c. The stroller seat 86 may be fixedly attached or removably attached to frame 81. In embodiments of the stroller 80 wherein stroller seat 86 is removably attached to frame 81, the stroller seat 86 may be removed and replaced in a backward facing configuration, see Figure 9A, be replaced by a infant carrier or car seat, see Figure 9C, or replaced with a pram, see Figure

9D. Embodiments of the stroller 80 may comprise a second seat attachment portion 89 adjacent to the handle portion 81c. A stroller 80 comprising a second seat attachment portion 89 allows the seat to be easily removed and reconfigured to a different orientation or replaced with a different style seat.

[0036] Embodiment of the stroller 80 comprises a first seat attachment portion 84. The seat attachment portion 84 is connected to the stroller 80 front wheel support frame 81a. The seat attachment portion 84 is adjacent to the front wheel support portion 81a of frame 81. The seat attachment portion is capable of supporting a second seat in front of the stroller seat 86. This provides convenience and versatility to a user of stroller 80. Seat attachment portion may be fixedly attached or removably attached to front wheel support portion 81a. The front seat may be positioned substantially over the front wheels so the stroller remains stable. The seats should be positioned such that the center of gravity of the stroller is between the front and rear wheels. If not an additional wheel may be placed on the attachment as previously described. Seat attachment portion 84 comprises a seat connector 88. Seat connector 88 may be a multipurpose general connector that allows different seats to interchanged on the seat attachment portion 84. Any style seat may be configured to connect to the seat connector, such as but not limited to, a stroller seat, a baby seat, a bassinet, a pram, a baby carrier, or a car seat, for example.

[0037] In the embodiment shown in Figure 8, stroller 80 comprises a first stroller seat 86 and a second stroller seat 85. Stroller seat 86 is shown in the forward facing configuration and stroller seat 85 is shown in a backward facing configuration. The seat attachment portion 84 is capable of supporting the seat above the front wheel 82 connected to the wheel support portion 81a. Preferably, the front seat is located substantially over the front wheels and the back seat is located substantially over the rear wheels.

[0038] Though it can not be seen in the side view of Figure 8, a typical embodiment of the stroller will comprise two connector portions. One connector portion will support each side of the seat. The attachment portion may be one piece or multiple parts.

[0039] Figures 9A through 9F show various configurations that are possible with the stroller of the invention. These configurations are not to be considered to be all available configurations of the stroller and one skilled in the art would recognize many additional possibilities based upon this specification and set of drawings. From the foregoing it will be

appreciated that, although specific embodiments of the invention have been described herein for purposes of illustration, various modifications may be made without deviating from the spirit and scope of the invention. Accordingly, the invention is not limited except as by the appended claims.

CLAIMS

1. An attachment for a stroller, comprising:

an attachment portion capable of connecting to a stroller frame; and

a seat attachment element capable of supporting a seat;

2. The attachment of claim 1, comprising:

a wheel.

3. The attachment for a stroller of claim 2, further comprising a wheel support frame connecting the wheel to the attachment portion.

4. The attachment for a stroller of claim 3, wherein the wheel support frame is pivotally connected to the attachment portion.

5. The attachment for a stroller of claim 4, wherein the wheel support frame is pivotally connected near the middle of the attachment portion.

6. The attachment for a stroller of claim 5, further comprising a folding mechanism.

7. The attachment for a stroller of claim 6, wherein the folding mechanism comprises a sliding member slidingly connected to the attachment portion and a folding frame member having a first end connected to the sliding member and a second end connected to the wheel support frame.

8. The attachment for a stroller of claim 4, wherein the wheel support frame is capable of pivoting from a first position to a second position.

9. The attachment for a stroller of claim 8, wherein the first position is a locked and in-use position and the second position is an unlocked and folded position.

10. The attachment for a stroller of claim 1, wherein the seat is a baby seat, a car seat, a stroller seat, a bassinet, or a pram.

11. The attachment for a stroller of claim 1, wherein the attachment frame member has a first end and a second end.

12. The attachment for a stroller of claim 11, wherein the first end is capable of connecting to a stroller frame.

13. The attachment for a stroller of claim 11, wherein the second end is connected to the seat attachment member.

14. The attachment for a stroller of claim 1, wherein the seat attachment member is capable of supporting a seat in either a forward or backward position.

15. The attachment for a stroller of claim 1, further comprising a stroller seat, wherein the seat attachment element is capable of supporting the stroller seat in either a forward or backward position.

16. A double stroller, comprising:

a stroller frame comprising wheels, a frame, a first seat and a connector portion connected to the frame;

an attachment frame comprising a wheel, a second seat, and a second attachment portion capable of connecting to the connector portion.

17. The double stroller of claim 12, wherein the connector portion is capable of being releasably connected to the second attachment portion.

18. The double stroller of claim 12, wherein the second seat is releasably connected to the attachment frame.

19. The double stroller of claim 18, wherein the attachment frame is capable of supporting the second seat in either a forward or backward position.

20. A double stroller, comprising:

a first attachment portion capable of removably supporting a child seat; and

a second attachment portion capable of supporting a child seat.

21. The double stroller of claim 20, wherein each seat attachment portion comprises two seat connector portions.

22. The double stroller of claim 20, wherein the child seat is one of a stroller seat, a baby carrier, a bassinet, a pram, or a car seat.

23. The double stroller of claim 20, comprising a frame, wherein the frame comprises a handle portion, a front wheel support portion and a back wheel support portion.

24. The double stroller of claim 23, wherein a first seat attachment portion is adjacent to the front wheel support portion.

25. The double stroller of claim 24, wherein the first seat attachment portion is above at least one front wheel connected to the wheel support portion.

26. The double stroller of claim 25, wherein the second seat attachment portion is adjacent to the handle portion.

27. The double stroller of claim 23, further comprising a folding mechanism that connects the handle portion, the front wheel support portion, and the back wheel support portion.

28. A stroller, comprising:

a frame;

at least one front wheel;

at least one rear wheel;

a stroller seat; and

a seat attachment portion capable of supporting a second seat in front of the stroller seat.

29. The stroller of claim 28, wherein the seat attachment portion comprises two seat connectors.

30. The stroller of claim 29, wherein the seat attachment portion is removably connected to the frame.

31. The stroller of claim 30, wherein the seat attachment portion comprises two portions each comprising one seat connector.

32. The stroller of claim 30, wherein the frame comprises a sleeve for removably connecting the seat attachment portion to the frame.

33. The stroller of claim 28, wherein the second seat is one seat selected from a stroller seat, an infant carrier, a bassinet, a pram, or a car seat.

34. The stroller of claim 33, wherein the second seat is integral to the seat attachment portion.

1761505