IN THE UNITED STATES DISTRICT COURT
FOR THE DISTRICT OF MASSACHUSETTS

BABY JOGGER, LLC, Plaintiff, v. MONAHAN PRODUCTS, LLC, D/B/A UPPABABY, Defendant.	Civil Action No. 1:24-CV-11582-ADB **JURY TRIAL DEMANDED**

FIRST AMENDED COMPLAINT

Plaintiff Baby Jogger, LLC ("Baby Jogger") files this First Amended Complaint for patent infringement against Defendant Monahan Products, LLC d/b/a UPPAbaby ("UPPAbaby"), and in support thereof alleges the following:

OVERVIEW

1. Baby Jogger has been a leading designer and innovator of baby strollers since at least 1984, when it invented the first jogging stroller. Baby Jogger's commitment to providing innovative baby stroller solutions continued when it invented and introduced the first true convertible single-to-double stroller. Despite this innovation being protected by several Baby Jogger patents, aggressive competitors such as UPPAbaby copied Baby Jogger's invention and saturated the market with infringing products, stealing valuable market share that rightfully belongs to Baby Jogger.

NATURE OF THE ACTION

2. This is an action for infringement of United States Patent No. 8,955,869 ("the '869 Patent"), United States Patent No. 9,403,550 ("the '550 Patent"), United States Patent No.

11,192,568 ("the '568 Patent"), U.S. Patent No. 11,505,231 ("the '231 Patent"), and United States Patent No. 11,878,729 ("the '729 Patent") (collectively, "the Asserted Patents"), which arises under the Patent Laws of the United States, Title 35, United States Code, §§ 100 *et seq*., including 35 U.S.C. §§ 271 and 281.

3. As set forth in detail below, this action for patent infringement arises as a result of UPPAbaby's unauthorized and unlicensed practice of claims of the Asserted Patents through at least the making, using, offering for sale, and/or selling within the United States, as well as importing into the United States, at least its UPPAbaby Vista and Vista V2 strollers, as well as its RumbleSeat,[1] RumbleSeat V2,[2] RumbleSeat V2+,[3] and Vista Expansion Tool that includes lower adapters[4] (collectively the "Infringing Products").

4. There are no meaningful differences between the Vista and Vista V2 stroller versions that would affect their status as Infringing Products.

PARTIES

5. Baby Jogger is a limited liability company organized and existing under the laws of the Commonwealth of Virginia, with a principal place of business at 6655 Peachtree Dunwoody Road, Atlanta, Georgia 30328.

6. On information and belief, UPPAbaby is a limited liability company organized and existing under the laws of the Commonwealth of Massachusetts, with a principal place of business at 276 Weymouth Street, Rockland, Massachusetts 02370.

---

[1] https://uppababy.com/accessories/strollers-accessories/rumbleseat-2015-2019/jake/
[2] https://uppababy.com/accessories/strollers-accessories/rumbleseat-v2/jake/
[3] https://uppababy.com/accessories/strollers-accessories/rumbleseat-v2-plus/jake/
[4] https://uppababy.com/accessories/strollers-accessories/vista-lower-adapter/

JURISDICTION AND VENUE

7. This Court has exclusive subject matter jurisdiction over this action under 28 U.S.C. §§ 1331 and 1338(a) because the Complaint concerns a federal question arising under the Patent Laws of the United States, including, without limitation, 35 U.S.C. §§ 271 and 281.

8. This Court has personal jurisdiction over UPPAbaby because it is a limited liability company organized and existing under the laws of the Commonwealth of Massachusetts and this judicial district.

9. This Court has personal jurisdiction over UPPAbaby because its principal place of business is in Massachusetts, it conducts business in Massachusetts, and it has committed acts of patent infringement in Massachusetts through the manufacture, use, offering for sale, and/or sale of Infringing Products in Massachusetts.

10. Venue is proper in this judicial district under 28 U.SC. §§ 1391(b)-(c) and 1400(b) because UPPAbaby resides in this judicial district.

BACKGROUND

The Asserted Patents

A. U.S. Patent No. 8,955,869

11. The ’869 Patent, titled “Seat Attachment For A Stroller,” was issued by the United States Patent and Trademark Office (“USPTO”) on February 17, 2015. A true and correct copy of the ’869 Patent is attached to this Complaint as **Exhibit A**.

12. The application that resulted in the issuance of the ’869 Patent, U.S. Patent Application No. 14/261,558, was filed on April 25, 2014, and claims priority to U.S. Provisional Patent Application No. 61/119,920 (“the ’920 Provisional Application”), filed on December 4, 2008.

13. The ’869 Patent is assigned to Baby Jogger.

14. Baby Jogger, as assignee, owns the entire right, title, and interest in the ’869 Patent.

15. The ’869 Patent is generally directed to seat attachments for a stroller used to convert a single stroller into a double stroller. Exemplary embodiments of the claimed invention are illustrated in at least figures 9A-9D of the ’869 Patent, shown below:

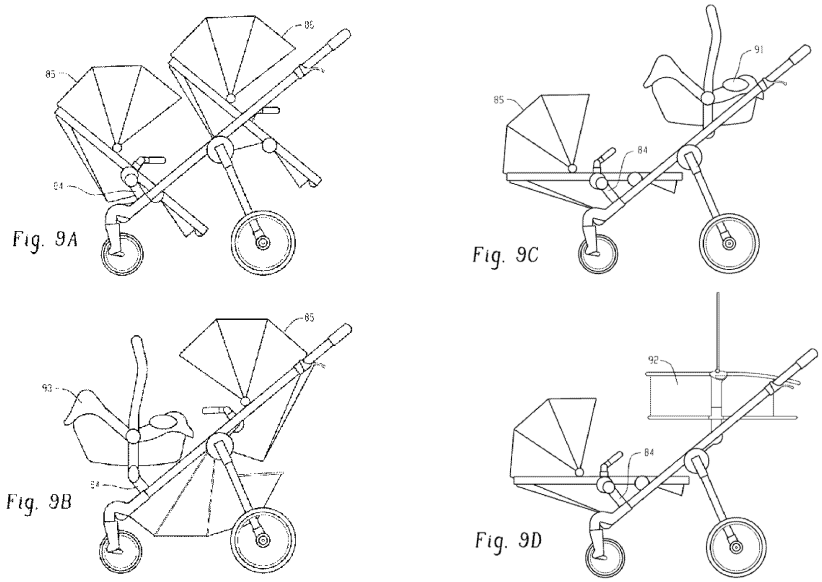

16. As an example, claim 1 of the ’869 Patent recites the following:

A seat attachment for a stroller, comprising:

a separate left attachment portion, wherein the left attachment portion comprises:

a connector portion capable of removably connecting to a stroller frame adjacent a left front wheel of the stroller and a left seat support element removably connecting a seat in either a forward or backward position; and

a separate right attachment portion, wherein the right attachment portion comprises:

a connector portion capable of removably connecting to a stroller frame adjacent a right front wheel of the stroller and a right seat support element removably connecting the seat in either a forward or backward position between the left and right support elements.

B. U.S. Patent No. 9,403,550

17. The ’550 Patent, titled “Seat Attachment For A Stroller,” was issued by the USPTO on August 2, 2016. A true and correct copy of the ’550 Patent is attached to this Complaint as **Exhibit B**.

18. The application that resulted in the issuance of the ’550 Patent, U.S. Patent Application No. 14/597,420, was filed on January 15, 2015, and claims priority to the ’920 Provisional Application, filed on December 4, 2008.

19. The ’550 Patent is assigned to Baby Jogger.

20. Baby Jogger, as assignee, owns the entire right, title, and interest in the ’550 Patent.

21. The ’550 Patent is generally directed to a stroller having a second seat attachment for releasably connecting a second seat to the stroller at a vertical position lower than and in front of the first seat.

22. As an example, claim 1 of the ’550 Patent recites the following:

> A stroller, comprising:
>
> a stroller frame;
>
> a plurality of wheels comprising a plurality of front wheels and a plurality of back wheels;
>
> a first seat coupled to the stroller frame at a first vertical position of the stroller frame closer to a handle of the stroller and configured to hold a first child in the stroller;
>
> a second seat attachment coupled to the stroller frame at a second vertical position substantially below the first vertical position and closer to the front wheels and comprising:
>
> a left seat support element, wherein the left seat support element comprises:
>
> a first connector portion releasably connected to the stroller frame closer to a left front wheel and a left seat connector releasably connecting a second seat in either a forward or backward position; and

a right seat support element, wherein the right seat support element comprises:

a second connector portion releasably connected to the stroller frame closer to a right front wheel and a right seat connector releasably connecting the second seat in either a forward or backward position between the left and right seat connectors; and

the second seat releasably connected to the left seat connector and the right seat connector and configured to hold a second child in the stroller while the first seat holds the first child.

C. U.S. Patent No. 11,192,568

23. The ’568 Patent, titled “Removable Seat Attachment For A Stroller,” was issued by the USPTO on December 7, 2021. A true and correct copy of the ’568 Patent is attached to this Complaint as **Exhibit C**.

24. The application that resulted in the issuance of the ’568 Patent, U.S. Patent Application No. 16/832,429, was filed on March 27, 2020, and claims priority to the ’920 Provisional Application, filed on December 4, 2008 and U.S. Provisional Patent Application No. 62/311,224 (“the ’224 Provisional Application”) filed on March 21, 2016.

25. The ’568 Patent is assigned to Baby Jogger.

26. Baby Jogger, as assignee, owns the entire right, title, and interest in the ’568 Patent.

27. The ’568 Patent is generally directed to a stroller having seat attachment adapters for a second seat that is removably coupled to the stroller at a vertical position lower than and in front of the first seat.

28. As an example, claim 1 of the ’568 Patent recites the following:

A stroller, comprising:

a stroller frame comprising:

a first upper tube support frame;

a second upper tube support frame;

a first front wheel support frame rotatably adjusted to be substantially parallel with respect to the first upper tube support frame when the stroller frame is unfolded from a folded configuration;

a second front wheel support frame rotatably adjusted to be substantially parallel with respect to the second upper tube support frame when the stroller frame is unfolded from a folded configuration;

a first back wheel support frame rotated with respect to the first upper tube support frame; and

a second back wheel support frame rotated with respect to the second upper tube support frame;

a plurality of wheels comprising at least one front wheel and a plurality of back wheels;

a first seat coupled along the first upper tube support frame and the second upper tube support frame at a first vertical position of the stroller frame;

a first seat attachment adapter coupled to the first front wheel support frame at a second vertical position of the stroller frame that is below the first vertical position;

a second seat attachment adapter coupled to the second front wheel support frame at a third vertical position of the stroller frame that is below the first vertical position;

wherein a second seat is removably coupled to the first seat attachment adapter and the second seat attachment adapter to position the second seat at a fourth vertical position that is below the first vertical position and wherein the second vertical position and the third vertical position are at a same vertical height.

D. U.S. Patent No. 11,505,231

29. The ’231 Patent, titled “Removable Seat Attachment For A Stroller,” was issued by the USPTO on November 22, 2022. A true and correct copy of the ’231 Patent is attached to this Complaint as **Exhibit D**.

30. The application that resulted in the issuance of the ’231 Patent, U.S. Patent Application No. 17/877,323, was filed on July 29, 2022, and claims priority to the ’920 Provisional Application, filed on December 4, 2008 and the ’224 Provisional Application filed on March 21, 2016.

31. The ’231 Patent is assigned to Baby Jogger.

32. Baby Jogger, as assignee, owns the entire right, title, and interest in the ’231 Patent.

33. The ’231 Patent is generally directed to a stroller system having front seat attachments to support a front stroller seat that is substantially over the front wheels and lower than the rear stroller seat.

34. As an example, claim 1 of the ’231 Patent recites the following:

> A stroller system for supporting a front stroller seat and a rear stroller seat, the system comprising:
>
> a pair of rear wheels;
>
> a pair of front wheels;
>
> a frame including a handle portion, a rear wheel support portion, a front wheel support portion and a folding mechanism connecting the front wheel support portion and the handle portion in both an unfolded configuration and in a folded configuration, wherein the folding mechanism connects the rear wheel support portion to the front wheel support portion and the handle portion, wherein the frame includes a stroller seat support portion positioned at a first vertical position adjacent the handle portion, and wherein the front wheel support portion and the handle portion are substantially parallel when the frame is in the unfolded configuration; and
>
> a front seat attachment configured for attachment to the front wheel support portion at a second vertical position substantially lower than the first vertical position,
>
> wherein the front seat attachment is configured to releasably connect to and support the front stroller seat in either a forward-facing configuration or a backward-facing configuration,

wherein the front seat attachment is configured to support the front stroller seat substantially over the front wheels so that a center of gravity of the stroller system is between the front wheels and the rear wheels;

wherein the rear wheel support portion extends diagonally from the front wheel support portion when the frame is in the unfolded configuration, and the rear wheel support portion is disposed adjacent to both the front wheel support portion and the handle portion when the frame is in the folded configuration; and

wherein the stroller seat support portion positioned at the first vertical position and the front seat attachment at the second vertical position create an inline descending configuration of the rear stroller seat and the front stroller seat.

E. U.S. Patent No. 11,878,729

35. The ’729 Patent, titled “Removable Seat Attachment For A Stroller,” was issued by the USPTO on January 23, 2024. A true and correct copy of the ’729 Patent is attached to this Complaint as **Exhibit E**.

36. The application that resulted in the issuance of the ’729 Patent, U.S. Patent Application No. 18/051,053, was filed on October 31, 2022, and claims priority to the ’920 Provisional Application, filed on December 4, 2008 and the ’224 Provisional Application filed on March 21, 2016.

37. The ’729 Patent is assigned to Baby Jogger.

38. Baby Jogger, as assignee, owns the entire right, title, and interest in the ’729 Patent.

39. The ’729 Patent is generally directed to a stroller system having a front seat attachment to support a front stroller seat that is substantially over the front wheels and lower than the rear stroller seat.

40. As an example, claim 1 of the ’729 Patent recites the following:

A stroller system for supporting a front stroller seat and a rear stroller seat, the system comprising:

a pair of rear wheels;

a pair of front wheels;

a frame including a handle portion, a rear wheel support portion, a front wheel support portion, and a folding mechanism connecting the front wheel support portion and the handle portion in both an unfolded configuration and in a folded configuration,

wherein the frame includes a stroller seat support portion positioned at a first vertical position adjacent the handle portion, and wherein the front wheel support portion and the handle portion are parallel when the frame is in the unfolded configuration; and

a front seat attachment configured for attachment to the front wheel support portion at a second vertical position substantially lower than the first vertical position,

wherein the front seat attachment is configured to releasably connect to and support the front stroller seat in either a forward-facing configuration or a backward-facing configuration,

wherein the front seat attachment is configured to support the front stroller seat substantially over the front wheels so that a center of gravity of the stroller system is between the front wheels and the rear wheels;

wherein the rear wheel support portion extends diagonally relative to the front wheel support portion when the frame is in the unfolded configuration, and the rear wheel support portion is disposed adjacent to both the front wheel support portion and the handle portion when the frame is in the folded configuration; and

wherein the stroller seat support portion positioned at the first vertical position and the front seat attachment at the second vertical position create an inline descending configuration of the rear stroller seat and the front stroller seat.

Baby Jogger's Ownership of the Asserted Patents

41. On December 4, 2008, inventor Mark Zehfuss filed the '920 Provisional Application titled "Attachment for a Stroller."

42. On December 4, 2009, inventor Mark Zehfuss filed U.S. Patent Application No. 12/631,375 ("the '375 Application") titled "Seat attachment for a stroller," which claimed priority to the '920 Provisional Application.

43. Also on December 4, 2009, Mark Zehfuss assigned "the full, exclusive and entire right, title, and interest" in the '375 Application to Dynamic Brands, LLC ("Dynamic Brands"). This assignment expressly included "any division, continuation, continuation-in-part, substitution, reissue, renewal, reexam, or request for continued examination ("RCE") thereof, and in and to all inventions and improvements thereon…." ECF No. 28-1, Page 3.

44. On or around April 20, 2012, Baby Jogger Acquisition, LLC (which later merged with Baby Jogger, LLC) and Dynamic Brands, LLC entered into a Membership Interest and Asset Purchase Agreement (the "Purchase Agreement"). A true and correct, redacted copy of this Purchase Agreement is attached to this Complaint as **Exhibit F**.

45. As part of the Purchase Agreement, Dynamic Brands agreed to "sell, convey, transfer, assign and deliver" to Baby Jogger "***all of [Dynamic Brands'] and its Subsidiary's right, title and interest*** in and to, free and clear of all Liens . . . (a) the Intellectual Property described in Annex 2.2(a)…." Ex. F at 11 (§ 2.2) (emphasis added). Annex 2.2(a) to the Purchase Agreement included, *inter alia*, the '920 Provisional Application and '375 Application. Ex. F at Annex 2.2(a).

46. The Purchase Agreement further defined "Intellectual Property" to include "(a) patents, patent applications, patent disclosures and inventions (whether or not patentable and whether or not reduced to practice) and any reissue, continuation, continuation in part, revision, extension or reexamination thereof . . . ." Ex. F at 5.

47. As part of the Purchase Agreement, Dynamic Brands represented and warranted that Baby Jogger "shall own or otherwise have the rights to use all Intellectual Property in connection with the Business . . . free and clear of all Liens" and that Baby Jogger "shall possess ***all right, title and interest*** in and to all of the Registered Intellectual Property . . . free and clear of all Liens . . . ." Ex. F at 22-23 (§ 3.16(b)) (emphasis added). The Purchase Agreement defined

Pending and Registered Intellectual Property to include the ’920 Provisional Application and ’375 Application. Ex. F at 22 (§ 3.16), Schedule 3.16(a).

48. As part of the Purchase Agreement, Dynamic Brands did not retain any right, title, or interest in the ’920 Provisional Application or the ’375 Application. *See, e.g.*, Ex. F at 5, 11 (§ 2.2), 22-23 (§3.16).

49. At the time the Purchase Agreement was executed, there were no existing patents or pending continuation patent applications associated with the ’920 Provisional Application or the ’375 Application.

50. As part of the Purchase Agreement, Dynamic Brands also represented and warranted that it would cooperate with Baby Jogger “in ensuring [Baby Jogger’s] ownership of the Pending Intellectual Property and the Registered Intellectual Property are properly recorded.” Ex. F at 22 (§ 3.16(a)); *see also* Ex. F at 40 (§ 6.2(a)). Schedule 3.16(a) of the Purchase Agreement includes, *inter alia*, the ’920 Provisional Application and ’375 Application. Ex. F at Schedule 3.16(a).

51. To that end, on April 20, 2012, Dynamic Brands executed an Assignment and Assumption Agreement with Baby Jogger. ECF No. 28-2, Page 4-13. Pursuant to that assignment agreement, Dynamic Brands assigned to Baby Jogger “***all of [Dynamic Brands’] right, title and interest*** in and to the Acquired Assets that are intangible personal property including . . . the patent applications and issued patents set forth on Exhibit B . . . .” ECF No. 28-2, Page 4 (emphasis added). Exhibit B to the Assignment and Assumption Agreement included the ’920 Provisional Application and ’375 Application. ECF No. 28-2, Page 8.

52. The April 20, 2012 Assignment and Assumption Agreement incorporated by reference the terms of the Purchase Agreement. ECF No. 28-2, Page 4.

53. The ’224 Provisional Application was filed by Baby Jogger on March 21, 2016.

54. Each of the Asserted Patents are continuations of the ’375 Application and claim priority to the ’920 Provisional Application or to both the ’920 Provisional Application and the ’224 Provisional Application. As a result of at least the above referenced agreements, Baby Jogger owns all right, title and interest to the Asserted Patents.

UPPAbaby’s Infringing Products

55. UPPAbaby makes, uses, sells, and/or offers to sell in the United States, and/or imports into the United States, the Infringing Products, including, but not limited to, the UPPAbaby Vista and Vista V2 stroller (Vista V2 shown below), that when used in combination with the RumbleSeat, RumbleSeat V2, RumbleSeat V2+ (shown below), and/or Vista Expansion Tool that includes lower adapters, infringe claims of the Asserted Patents.

https://uppababy.com/strollers/full-size/vista-v2/anthony/

https://uppababy.com/vista-expansion-tool/

56. UPPAbaby makes, uses, sells, and/or offers to sell in the United States, and/or imports into the United States, the RumbleSeat, RumbleSeat V2, RumbleSeat V2+ (shown below), and its Vista Expansion Tool that includes lower adapters (shown below). These products allow the UPPAbaby Vista and Vista V2 to convert from a single stroller into a double stroller.

https://uppababy.com/accessories/strollers-accessories/rumbleseat-v2-plus/jake/

https://uppababy.com/accessories/strollers-accessories/vista-lower-adapter/

UPPAbaby's Knowledge and Willful Infringement

57. At least as early as December 2008, Baby Jogger conceived of the novel concept of a stroller that, *inter alia*, had seat attachments for the frame of the stroller that connected a removable second seat that was capable of being oriented forward-facing or backward-facing. To that end, on December 4, 2008, Baby Jogger filed the '920 Provisional Application titled "Attachment For A Stroller" directed to at least this concept.

58. By at least as early as 2010, Baby Jogger had released and begun to offer for sale its City Select stroller, the first single stroller that could be conveniently converted to a double stroller and that also overcame the disadvantages of existing double strollers. The City Select stroller revolutionized the single-to-double stroller space by providing a sleek, compact solution in which the optional second (front) seat was reversible in direction, its placement did not impair under-seat storage capacity, and the second seat adapters allowed for interchangeability with other types of seats, such as a bassinet or car seat.[5]

[5] *See, e.g.*, https://www.youtube.com/watch?v=sdeMgSm-xe0.

59. At the time of Baby Jogger's invention, double strollers existed that were much larger than single strollers, and thus resulted in more difficulty maneuvering the double stroller through doors and down aisles in stores.

60. In an attempt to overcome this disadvantage, certain stroller manufacturers developed a second seat that could hang under and slightly behind the seat of the single stroller. While this provided a second seat for a child, it also tucked the child very closely to the back of the first seat and reduced the capacity of the under-seat storage. The second seat also was not reversible, and the seat attachment portions of the second seat were permanently affixed such that the second seat was not interchangeable.

61. By way of example, in and around 2008, the Phil and Teds Dash stroller (shown below) was released. It had a second seat that was positioned under, behind, and very close to the back of the seat of the single stroller. This positioning also reduced the capacity of the under-seat storage.

62. In and around 2009, UPPAbaby introduced its original RumbleSeat. This original RumbleSeat was only capable of attaching to the stroller frame such that it positioned the second

child close to, and facing, the back of a backward-facing first seat, reduced the under-seat storage, was not reversible, and the seat was not interchangeable.[6]

63. In or around 2015, UPPAbaby introduced its new RumbleSeat, which allowed its single seat Vista stroller to be converted into a double stroller in the same manner as was disclosed in the ’869 Patent.

64. Consequently, on or around December 4, 2015, Baby Jogger sent UPPAbaby a letter notifying it that its Vista stroller infringed, and continued to infringe, the ’869 Patent.

65. On December 18, 2015, Baby Jogger sent UPPAbaby a detailed claim chart providing further evidence that its Vista stroller infringed, and continued to infringe, the ’869 Patent.

66. As a result, by at least as early as December 4, 2015, UPPAbaby had actual notice of the ’869 Patent and that its Vista stroller was infringing the ’869 Patent. Further, UPPAbaby knew or should have known of, or was willfully blind to, the additional patents in the same family as the ’869 Patent, including the ’550 Patent, the ’568 Patent, the ’231 Patent, and the ’729 Patent, since at least as early as December 4, 2015.

67. The City Select and City Select 2 strollers are covered by the Asserted Patents. Further, Baby Jogger has virtually marked its City Select strollers since at least as early as January 2023 with, *inter alia*, the ’869 Patent, the ’550 Patent, the ’568 Patent, and the ’231 Patent.[7]

68. Baby Jogger and UPPAbaby are direct competitors in the baby stroller market. On information and belief, UPPAbaby monitors the products and patent filings of its competitors,

---

[6] *See, e.g.*, https://www.youtube.com/watch?v=VT3y_oN_-hg.; https://www.growingyourbaby.com/uppababy-introduces-the-rumbleseat/; *see also* U.S. Patent No. 8,033,554.

[7] https://www.newellbrands.com/patents

including Baby Jogger, and therefore would have been aware of the Asserted Patents and the Baby Jogger City Select strollers.

69. UPPAbaby has also had actual knowledge of each of the Asserted Patents and its infringement of each of the Asserted Patents, since June 18, 2024, which is the date of filing of the original Complaint, or at the latest, since June 24, 2024, which is the date of service of the original Complaint. ECF Nos. 1, 6.

70. Despite this actual notice, UPPAbaby has continued to intentionally infringe, induce others to infringe, and contribute to the infringement of, the Asserted Patents by continuing to make, use, sell, and/or offer to sell in the United States, and/or import into the United States, the Infringing Products.

COUNT ONE

(Direct Infringement of the ’869 Patent under 35 U.S.C. § 271(a))

71. Baby Jogger realleges and incorporates the preceding paragraphs 1-70 as set forth above.

72. UPPAbaby has been, and is, directly infringing at least claims 1-5 and 24-29 of the ’869 Patent, literally and/or under the doctrine of equivalents, by making, using, offering to sell, and/or selling within the United States, and/or importing into the United States, the Infringing Products.

73. By way of example, the Infringing Products infringe at least claim 1 of the ’869 Patent because they contain each and every limitation of this claim.

74. Without conceding the preamble is a limitation, the Infringing Products contain “[a] seat attachment for a stroller, comprising: a separate left attachment portion”:

https://uppababy.com/accessories/strollers-accessories/vista-lower-adapter/

75. The Infringing Products further include a separate left attachment portion, "wherein the left attachment portion comprises a connector portion capable of removably connecting to a stroller frame adjacent a left front wheel of the stroller":

https://uppababy.com/accessories/strollers-accessories/vista-lower-adapter/

76. The Infringing Products also include a left attachment portion comprising "a left seat support element removably connecting a seat in either a forward or backward position"

https://uppababy.com/accessories/strollers-accessories/vista-lower-adapter/

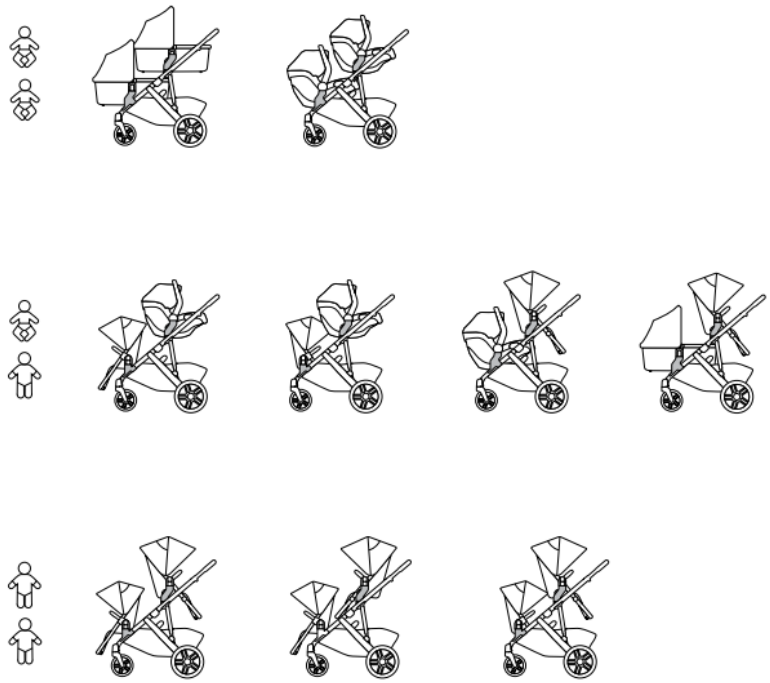

UPPAbaby Vista V2 Manual, at 45 (https://uppababy.com/wp-content/uploads/2023/09/VistaV2_Manual_230831.pdf).

https://uppababy.com/accessories/strollers-accessories/rumbleseat-v2-plus/jake/

77. The Infringing Products likewise contain "a separate right attachment portion":

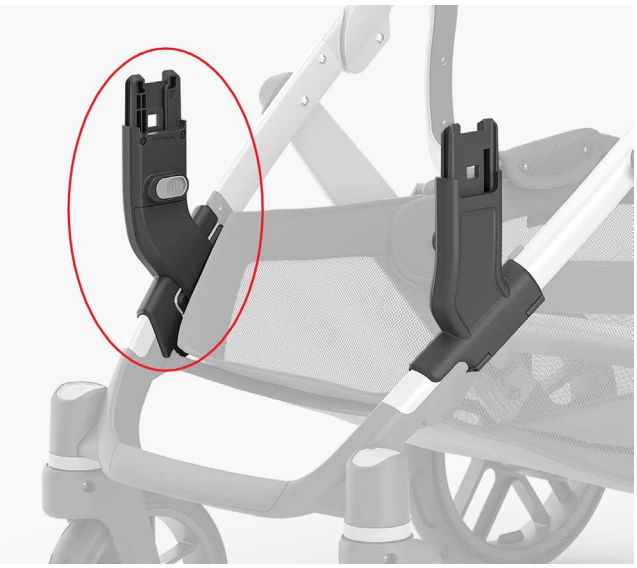

https://uppababy.com/accessories/strollers-accessories/vista-lower-adapter/

78. The Infringing Products further include a separate right attachment portion, "wherein the right attachment portion comprises: a connector portion capable of removably connecting to a stroller frame adjacent a right front wheel of the stroller":

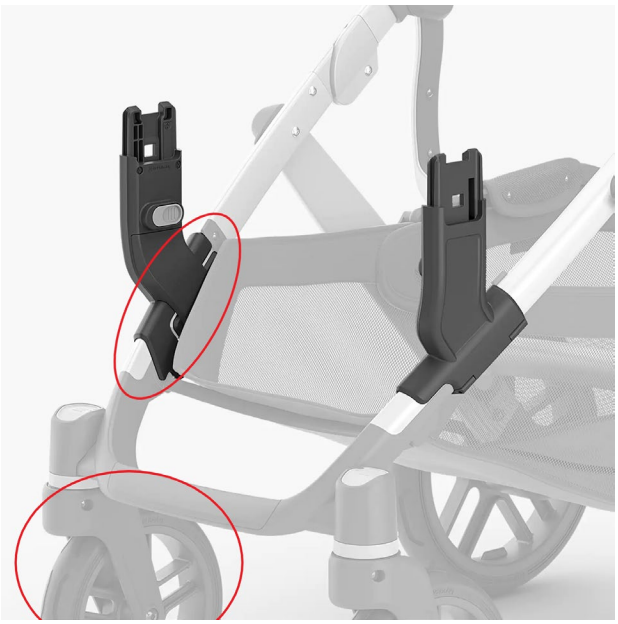

https://uppababy.com/accessories/strollers-accessories/vista-lower-adapter/

79. The Infringing Products also include a right attachment portion comprising "a right seat support element removably connecting the seat in either a forward or backward position between the left and right support elements":

https://uppababy.com/accessories/strollers-accessories/vista-lower-adapter/

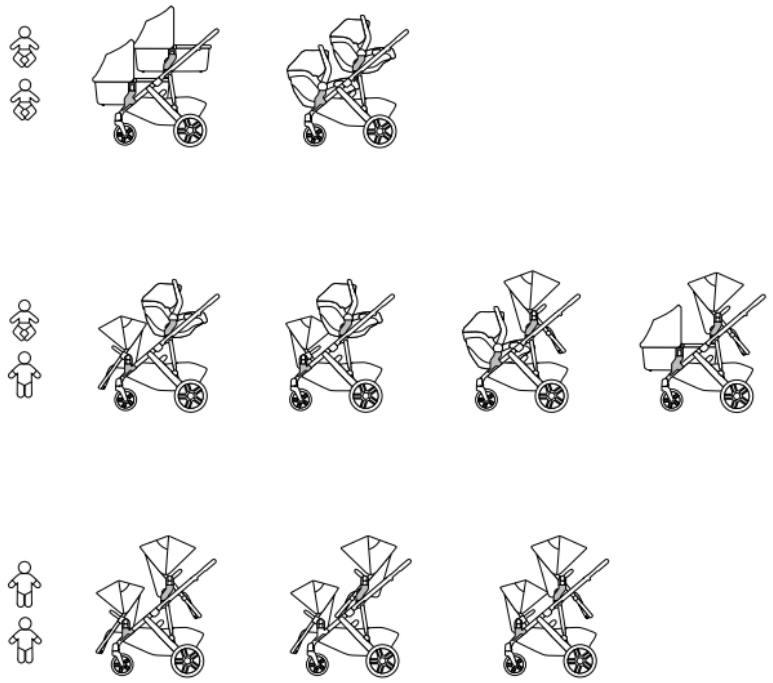

UPPAbaby Vista V2 Manual, at 45 (https://uppababy.com/wp-content/uploads/2023/09/VistaV2_Manual_230831.pdf)

https://uppababy.com/accessories/strollers-accessories/rumbleseat-v2-plus/jake/

80. UPPAbaby does not have a license to practice the technology claimed by the ’869 Patent. UPPAbaby does not have any other authority to practice the technology claimed by the ’869 Patent.

81. UPPAbaby has had actual knowledge of at least the ’869 Patent, as well as its infringement of ’869 Patent by the Infringing Products, since at least as early as December 4, 2015, when Baby Jogger sent UPPAbaby a letter notifying it that its Vista stroller infringed, and continues to infringe, the ’869 Patent. Further, the application that issued as the ’869 Patent (U.S. Patent Application No. 14/261,558) was published on November 13, 2014, and thus was publicly available as of that date.

82. UPPAbaby has also had actual knowledge of the ’869 Patent and its infringement of the ’869 Patent by the Infringing Products, since at least as early as June 18, 2024, which is the date of filing of the original Complaint, or at the latest, since June 24, 2024, which is the date of service of the original Complaint. ECF Nos. 1, 6.

83. UPPAbaby’s infringement of the ’869 Patent has been and continues to be knowing, intentional, and willful.

84. At least because of UPPAbaby’s willful infringement of the ’869 Patent, this is an exceptional case, and Baby Jogger is entitled to an award of its reasonable attorneys’ fees pursuant to 35 U.S.C. § 285.

85. As a result of UPPAbaby’s infringement of the ’869 Patent, Baby Jogger has suffered, and will continue to suffer, damage including, but not limited to, monetary damages. Baby Jogger is entitled to recover from UPPAbaby damages adequate to compensate it for such infringement, which have yet to be determined.

COUNT TWO

(Direct Infringement of the ’550 Patent under 35 U.S.C. § 271(a))

86. Baby Jogger realleges and incorporates the preceding paragraphs 1-70 as set forth above.

87. UPPAbaby has been, and is, directly infringing at least claims 1-7 of the ’550 Patent, literally and/or under the doctrine of equivalents, by making, using, offering to sell, and/or selling within the United States, and/or importing into the United States, the Infringing Products.

88. By way of example, the Infringing Products infringe at least claim 1 of the ’550 Patent because they contain each and every limitation of this claim.

89. Without conceding the preamble is a limitation, the Infringing Products each are “[a] stroller comprising: a stroller frame”:

https://uppababy.com/accessories/strollers-accessories/vista-lower-adapter/

90. The Infringing Products include “a plurality of wheels comprising a plurality of front wheels and a plurality of back wheels”:

https://uppababy.com/accessories/strollers-accessories/vista-lower-adapter/

91. The Infringing Products also include "a first seat coupled to the stroller frame at a first vertical position of the stroller frame closer to a handle of the stroller and configured to hold a first child in the stroller":

https://uppababy.com/accessories/strollers-accessories/vista-lower-adapter/

92. The Infringing Products include "a second seat attachment coupled to the stroller frame at a second vertical position substantially below the first vertical position and closer to the front wheels":

https://uppababy.com/accessories/strollers-accessories/vista-lower-adapter/

93. The Infringing Products include a second seat attachment that contains "a left seat support element":

https://uppababy.com/accessories/strollers-accessories/vista-lower-adapter/

94. The left seat support element of the Infringing Products likewise comprises "a first connector portion releasably connected to the stroller frame closer to a left front wheel":

https://uppababy.com/accessories/strollers-accessories/vista-lower-adapter/

95. The left seat support element of the Infringing Products also includes "a left seat connector releasably connecting a second seat in either a forward or backward position":

https://uppababy.com/accessories/strollers-accessories/vista-lower-adapter/

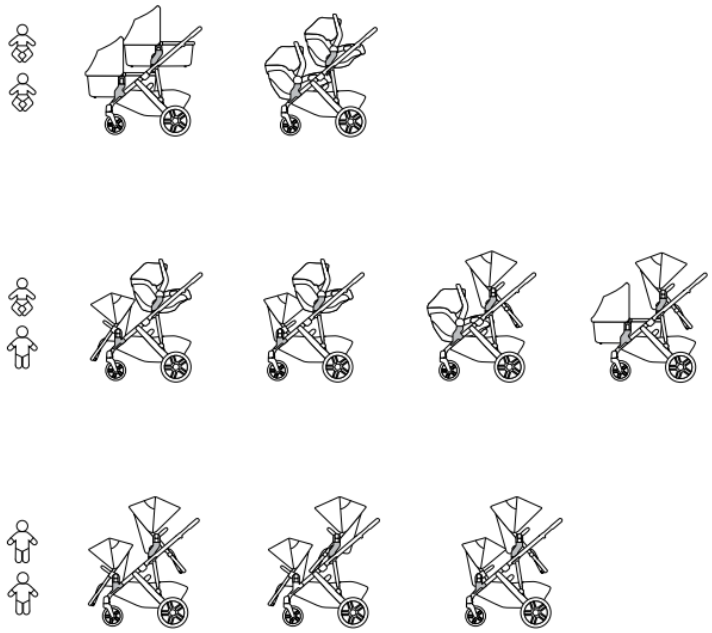

UPPAbaby Vista V2 Manual, at 45 (https://uppababy.com/wp-content/uploads/2023/09/VistaV2_Manual_230831.pdf).

https://uppababy.com/accessories/strollers-accessories/rumbleseat-v2-plus/jake/

96. The Infringing Products also include a second seat attachment that contains "a right seat support element":

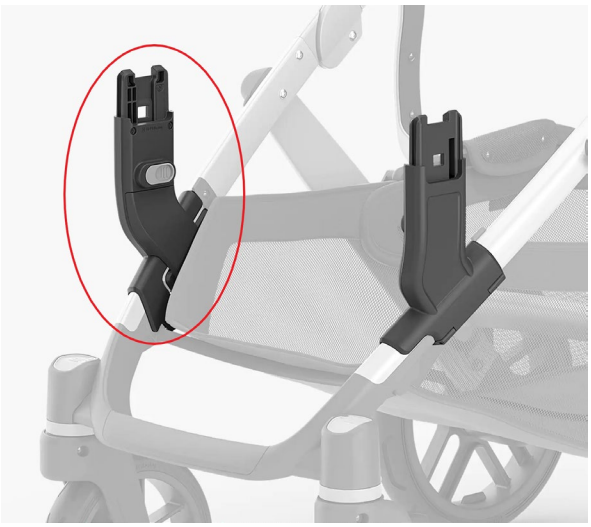

https://uppababy.com/accessories/strollers-accessories/vista-lower-adapter/

97. The right seat support element of the Infringing Products comprises "a second connector portion releasably connected to the stroller frame closer to a right front wheel":

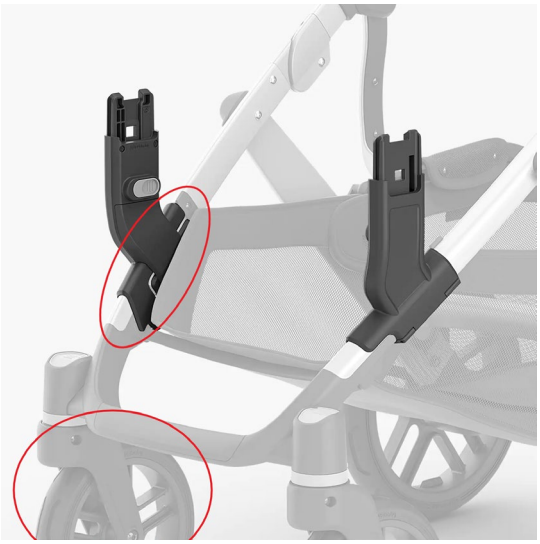

https://uppababy.com/accessories/strollers-accessories/vista-lower-adapter/

98. The right seat support element of the Infringing Products also includes "a right seat connector releasably connecting the second seat in either a forward or backward position between the left and right seat connectors":

https://uppababy.com/accessories/strollers-accessories/vista-lower-adapter/

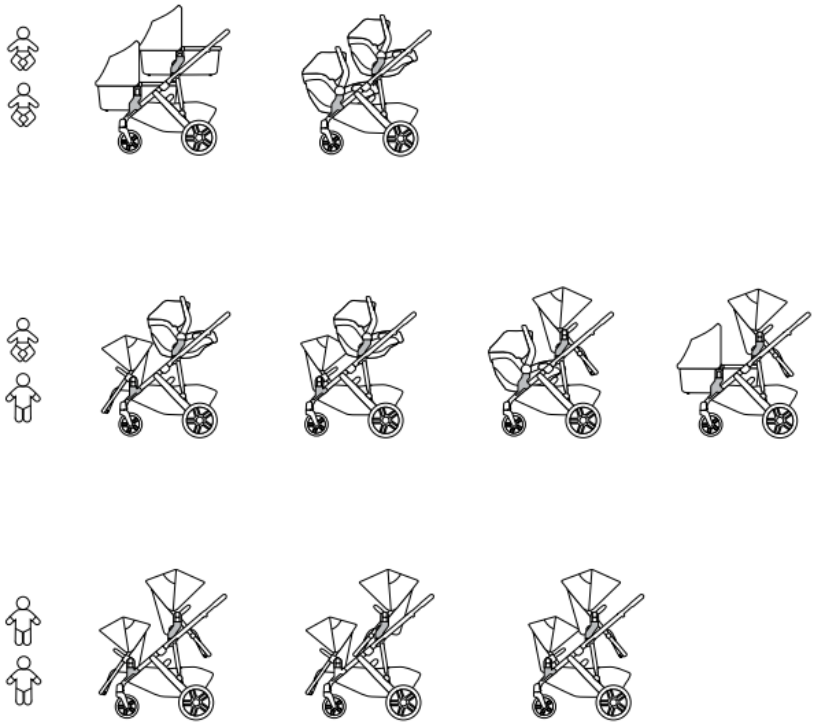

UPPAbaby Vista V2 Manual, at 45 (https://uppababy.com/wp-content/uploads/2023/09/VistaV2_Manual_230831.pdf)

https://uppababy.com/accessories/strollers-accessories/rumbleseat-v2-plus/jake/

99. Finally, the Infringing Products also include a second seat which is "releasably connected to the left seat connector and the right seat connector and configured to hold a second child in the stroller while the first seat holds the first child":

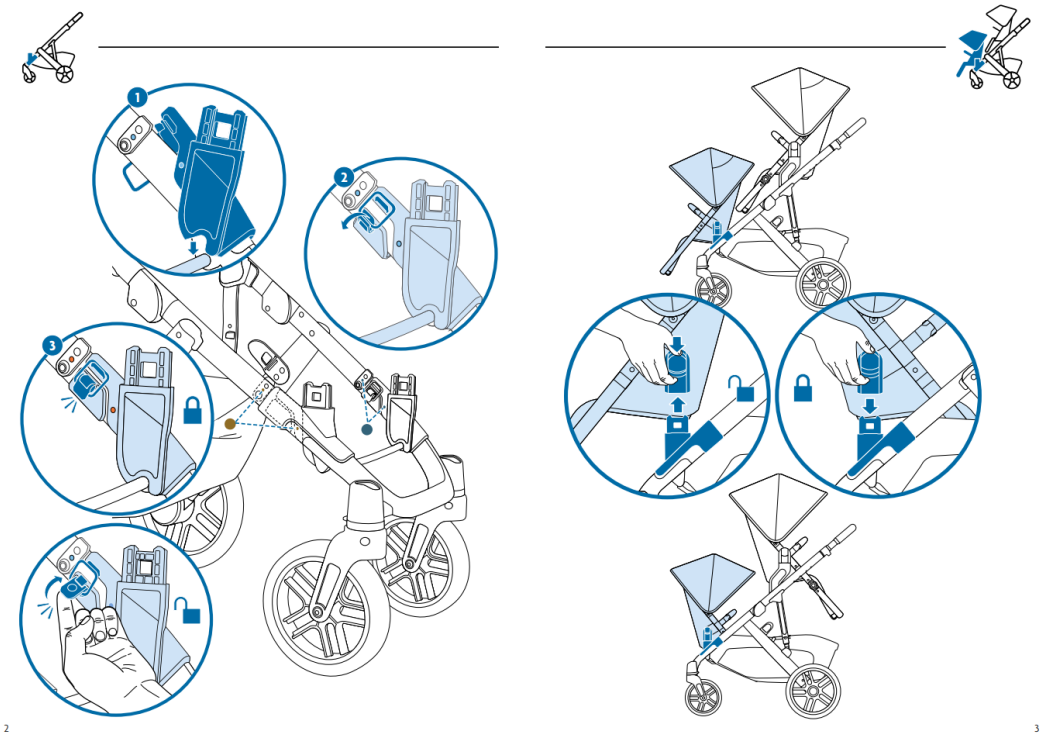

https://uppababy.com/wp-content/uploads/2023/12/0920-RBS_RumbleSeatV2Manual_010523.pdf

https://uppababy.com/strollers/full-size/vista-v2/jake/

100. UPPAbaby does not have a license to practice the technology claimed by the '550 Patent. UPPAbaby does not have any other authority to practice the technology claimed by the '550 Patent.

101. UPPAbaby has had actual knowledge of at least the '869 Patent, as well as its infringement of '869 Patent by the Infringing Products, since at least as early as December 4, 2015, when Baby Jogger sent UPPAbaby a letter notifying it that its Vista stroller infringed, and continues to infringe, the '869 Patent. Further, the application that issued as the '550 Patent (U.S. Patent Application No. 14/597,420) was published on May 7, 2015, and thus was publicly available as of that date. As a result, UPPAbaby knew, should have known, or was willfully blind, of the additional patents in the same family as the '869 Patent, including the '550 Patent.

102. UPPAbaby has also had actual knowledge of the '550 Patent and its infringement of the '550 Patent by the Infringing Products, since at least as early as June 18, 2024, which is the date of filing of the original Complaint, or at the latest, since June 24, 2024, which is the date of service of the original Complaint. ECF Nos. 1, 6.

103. As a result, UPPAbaby's infringement of the '550 Patent has been and continues to be knowing, intentional, and willful.

104. At least because of UPPAbaby's willful infringement of the '550 Patent, this is an exceptional case, and Baby Jogger is entitled to an award of its reasonable attorneys' fees pursuant to 35 U.S.C. § 285.

105. As a result of UPPAbaby's infringement of the '550 Patent, Baby Jogger has suffered, and will continue to suffer, damage including, but not limited to, monetary damages. Baby Jogger is entitled to recover from UPPAbaby damages adequate to compensate it for such infringement, which have yet to be determined.

COUNT THREE

(Induced Infringement of the '550 Patent under 35 U.S.C. § 271(b))

106. Baby Jogger realleges and incorporates the preceding paragraphs 1-70 and 86-105 as set forth above.

107. UPPAbaby has had actual knowledge of at least the '869 Patent and its infringement of the '869 Patent by the Infringing Products, since at least as early as December 4, 2015, when Baby Jogger sent UPPAbaby a letter notifying it that its Vista stroller infringed, and continues to infringe, the '869 Patent. Further, the application that issued as the '550 Patent (U.S. Patent Application No. 14/597,420) was published on May 7, 2015, and thus was publicly available as of that date. As a result, UPPAbaby knew, should have known, or was willfully blind, of the additional patents in the same family as the '869 Patent, including the '550 Patent.

108. UPPAbaby has also had actual knowledge of the '550 Patent and its infringement of the '550 Patent, since at least as early as June 18, 2024, which is the date of filing of the original

Complaint, or at the latest, since June 24, 2024, which is the date of service of the original Complaint. ECF Nos. 1, 6.

109. Despite such knowledge of the ’550 Patent, or being willfully blind to the existence of the ’550 Patent, UPPAbaby has provided, and continues to provide, the RumbleSeat, RumbleSeat V2, RumbleSeat V2+, and/or Vista Expansion Tool to its customers and, on information and belief, encourages and aids its customers to use these products in combination with the UPPAbaby Vista and/or Vista V2 stroller in a manner that infringes the ’550 Patent.

110. UPPAbaby has induced, and continues to induce, infringement of the ’550 Patent by actively, knowingly, and intentionally inducing its customers and/or end users (collectively “customers”) to directly infringe at least claims 1-7 of the ’550 Patent via use of its RumbleSeat, RumbleSeat V2, RumbleSeat V2+, and/or Vista Expansion Tool in combination with the UPPAbaby Vista and/or Vista V2 stroller.

111. UPPAbaby has induced, and continues to induce, its customers to directly infringe the ’550 Patent through activities such as marketing the Infringing Products to be used in combination, creating and distributing promotional and product literature, and offering technical support for the Infringing Products, each of which are designed to instruct, encourage, direct, enable, and facilitate the use of the RumbleSeat, RumbleSeat V2, RumbleSeat V2+, and/or Vista Expansion Tool in combination with the UPPAbaby Vista and/or Vista V2 stroller in a manner that infringes the ’550 Patent.

112. For example, UPPAbaby markets its Vista V2 stroller as “intuitively designed to ‘grow’ with your family! It starts as a single stroller but can easily transform to accommodate up to three children with added accessories and adapters…”[8] UPPAbaby also provides its customers

[8] https://uppababy.com/strollers/full-size/vista-v2/jake/

with manuals that instruct, encourage, direct, enable, and facilitate the use of the RumbleSeat, RumbleSeat V2, RumbleSeat V2+, and/or Vista Expansion Tool in combination with the UPPAbaby Vista and/or Vista V2 stroller in a manner that infringes the ’550 Patent.[9]

113. On information and belief, UPPAbaby has knowingly and intentionally encouraged and aided its customers to directly infringe the ’550 Patent and continues to do so.

114. UPPAbaby’s customers do incorporate the RumbleSeat, RumbleSeat V2, RumbleSeat V2+, and/or Vista Expansion Tool with the UPPAbaby Vista and/or Vista V2 stroller in a manner that infringes the ’550 Patent.

115. On information and belief, UPPAbaby specifically intended and intends that its actions will induce infringement of the ’550 Patent, or subjectively believes that its actions will result in infringement of the ’550 Patent. As a direct and proximate result of UPPAbaby’s inducement of infringement of ’550 Patent by its customers, Baby Jogger has been and continues to be damaged.

COUNT FOUR

(Contributory Infringement of the ’550 Patent under 35 U.S.C. § 271(c))

116. Baby Jogger realleges and incorporates the preceding paragraphs 1-70 and 86-105 as set forth above.

117. UPPAbaby has had actual knowledge of at least the ’869 Patent and its infringement of the ’869 Patent by the Infringing Products, since at least as early as December 4, 2015, when Baby Jogger sent UPPAbaby a letter notifying it that its Vista stroller infringed, and continues to

[9] *See, e.g.*, https://uppababy.com/wp-content/uploads/2023/09/VistaV2_Manual_230831.pdf; https://uppababy.com/wp-content/uploads/2023/12/0920-RBS_RumbleSeatV2Manual_010523.pdf; https://uppababy.com/wp-content/uploads/2022/10/0918-RBS-USCA_MANUAL.pdf.

infringe, the ’869 Patent. Further, the application that issued as the ’550 Patent (U.S. Patent Application No. 14/597,420) was published on May 7, 2015, and thus was publicly available as of that date. As a result, UPPAbaby knew, should have known, or was willfully blind, of the additional patents in the same family as the ’869 Patent, including the ’550 Patent.

118. UPPAbaby has also had actual knowledge of the ’550 Patent and its infringement of the ’550 Patent, since at least as early as June 18, 2024, which is the date of filing of the original Complaint, or at the latest, since June 24, 2024, which is the date of service of the original Complaint. ECF Nos. 1, 6.

119. Despite such knowledge, UPPAbaby sells and/or offers for sale in the United States, or imports into the United States, the RumbleSeat, RumbleSeat V2, RumbleSeat V2+, and/or Vista Expansion Tool knowing that these components are especially made or adapted for use in the infringement of the ’550 Patent. There is no other use for these components other than to be incorporated with the UPPAbaby Vista and/or Vista V2 stroller in a manner that infringes the ’550 Patent.

120. UPPAbaby’s customers who purchase a RumbleSeat, RumbleSeat V2, RumbleSeat V2+, and/or Vista Expansion Tool, do so with the sole purpose of incorporating these components with the UPPAbaby Vista and/or Vista V2 stroller in a manner that directly infringes the ’550 Patent and in fact do incorporate these components in a manner that directly infringes the ’550 Patent.

121. UPPAbaby has contributed, and continues to contribute, to the infringement of the ’550 Patent by third parties, including at least its customers, by selling and/or offering to sell in the United States, or importing into the United States, the RumbleSeat, RumbleSeat V2, RumbleSeat V2+, and/or Vista Expansion Tool, each of which are material components of the

invention claimed in the ’550 Patent and are not staple articles of commerce suitable for substantial noninfringing use as they can only be used in combination with the UPPAbaby Vista and/or Vista V2 stroller.

122. As a direct and proximate result of UPPAbaby’s contributing to the infringement of ’550 Patent by its customers, Baby Jogger has been and continues to be damaged.

COUNT FIVE

(Direct Infringement of the ’568 Patent under 35 U.S.C. § 271(a))

123. Baby Jogger realleges and incorporates the preceding paragraphs 1-70 as set forth above.

124. UPPAbaby has been and is directly infringing at least claims 1 and 7-9 of the ’568 Patent, literally and/or under the doctrine of equivalents, by making, using, offering to sell, and/or selling within the United States, and/or importing into the United States, the Infringing Products.

125. By way of example, the Infringing Products infringe at least claim 1 of the ’568 Patent because they contain each and every limitation of this claim.

126. Without conceding the preamble is a limitation, the Infringing Products each are “[a] stroller comprising: a stroller frame”:

https://uppababy.com/accessories/strollers-accessories/vista-lower-adapter/

127. The Infringing Products further include a stroller frame comprising "a first upper tube support frame" and "a second upper tube support frame":

https://uppababy.com/strollers/full-size/vista-v2/greyson/

128. The Infringing Products also include a stroller frame comprising "a first front wheel support frame rotatably adjusted to be substantially parallel with respect to the first upper tube support frame when the stroller frame is unfolded from a folded configuration":

https://uppababy.com/accessories/strollers-accessories/vista-lower-adapter/

129. The Infringing Products likewise contain a stroller frame comprising "a second front wheel support frame rotatably adjusted to be substantially parallel with respect to the second upper tube support frame when the stroller frame is unfolded from a folded configuration":

https://uppababy.com/accessories/strollers-accessories/vista-lower-adapter/

130. The Infringing Products include a stroller frame comprising "a first back wheel support frame rotated with respect to the first upper tube support frame":

https://uppababy.com/strollers/full-size/vista-v2/greyson/

https://uppababy.com/strollers/full-size/vista-v2/jake/#details-specifications

131. The Infringing Products include a stroller frame comprising "a second back wheel support frame rotated with respect to the second upper tube support frame":

https://uppababy.com/strollers/full-size/vista-v2/greyson/

https://uppababy.com/strollers/full-size/vista-v2/jake/#details-specifications

132. The Infringing Products also include "a plurality of wheels comprising at least one front wheel and a plurality of back wheels":

https://uppababy.com/accessories/strollers-accessories/vista-lower-adapter/

133. The Infringing Products include "a first seat coupled along the first upper tube support frame and the second upper tube support frame at a first vertical position of the stroller frame":

https://uppababy.com/accessories/strollers-accessories/vista-lower-adapter/

134. The Infringing Products likewise include "a first seat attachment adapter coupled to the first front wheel support frame at a second vertical position of the stroller frame that is below the first vertical position":

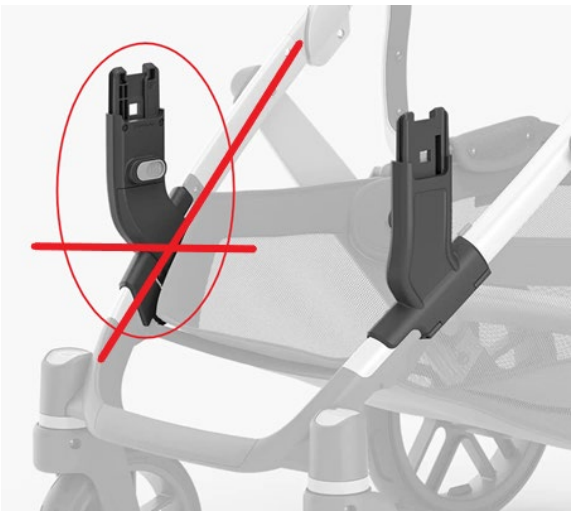

https://uppababy.com/accessories/strollers-accessories/vista-lower-adapter/

135. The Infringing Products also include "a second seat attachment adapter coupled to the second front wheel support frame at a third vertical position of the stroller frame that is below the first vertical position":

https://uppababy.com/accessories/strollers-accessories/vista-lower-adapter/

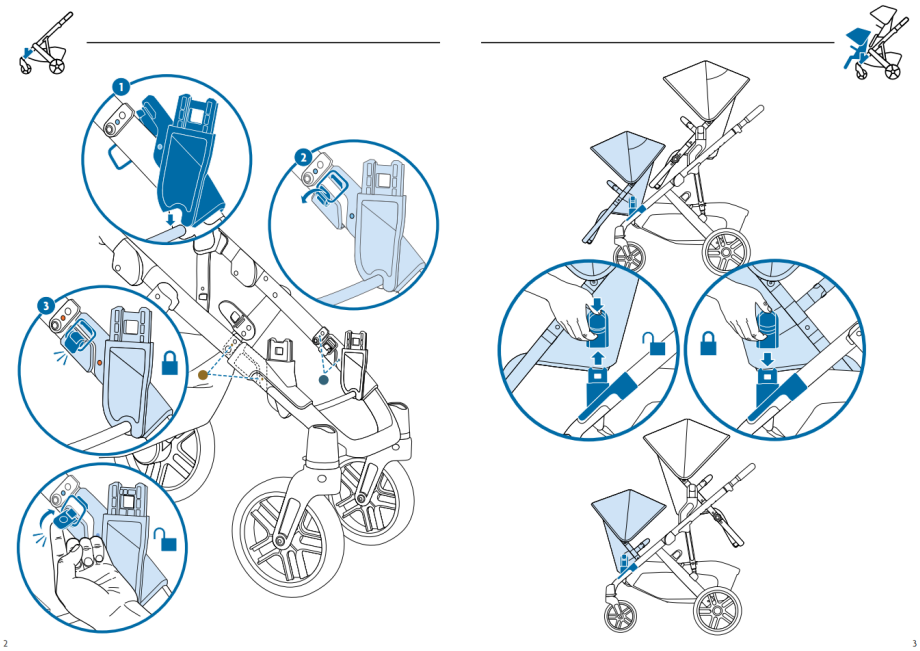

https://uppababy.com/wp-content/uploads/2023/12/0920-RBS_RumbleSeatV2Manual_010523.pdf

136. Finally, the Infringing Products include "a second seat [that] is removably coupled to the first seat attachment adapter and the second seat attachment adapter to position the second seat at a fourth vertical position that is below the first vertical position and wherein the second vertical position and the third vertical position are at a same vertical height":

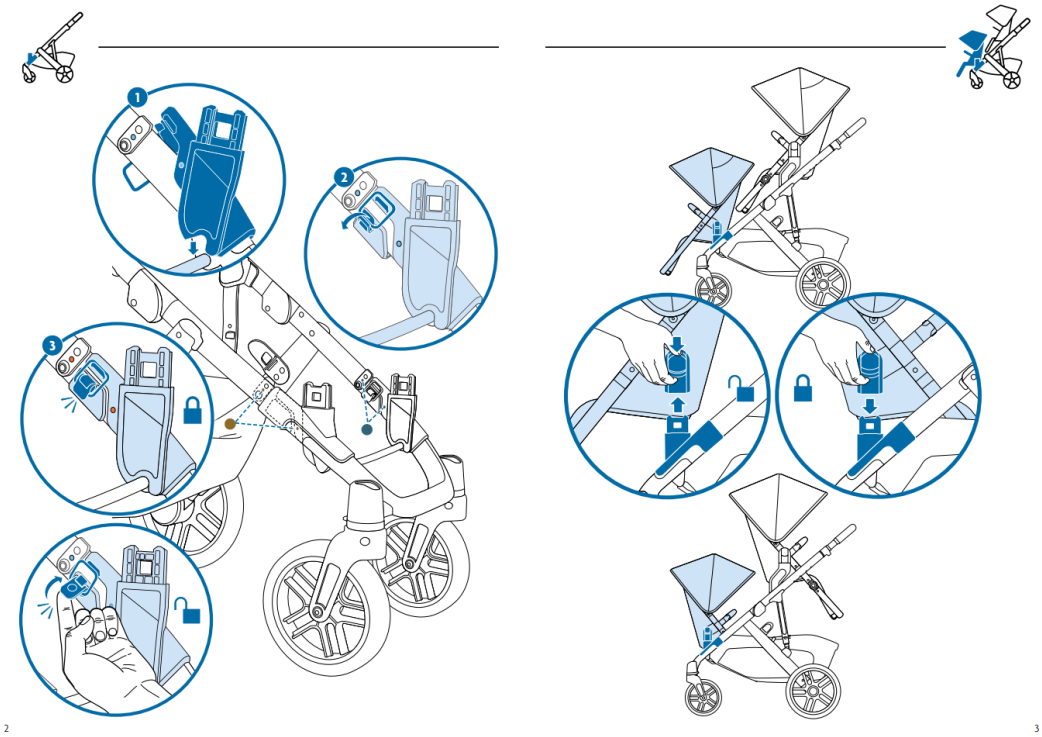

https://uppababy.com/wp-content/uploads/2023/12/0920-RBS_RumbleSeatV2Manual_010523.pdf

137. UPPAbaby does not have a license to practice the technology claimed by the ’568 Patent. UPPAbaby does not have any other authority to practice the technology claimed by the ’568 Patent.

138. UPPAbaby has had actual knowledge of at least the ’869 Patent, as well as its infringement of ’869 Patent by the Infringing Products, since at least as early as December 4, 2015, when Baby Jogger sent UPPAbaby a letter notifying it that its Vista stroller infringed, and continues to infringe, the ’869 Patent. Further, the application that issued as the ’568 Patent (U.S. Patent Application No. 16/832,429) was published on July 16, 2020, and thus was publicly available as of that date. As a result, UPPAbaby knew, should have known, or was willfully blind, of the additional patents in the same family as the ’869 Patent, including the ’568 Patent.

139. UPPAbaby has also had actual knowledge of the ’568 Patent and its infringement of the ’568 Patent by the Infringing Products, since at least as early as June 18, 2024, which is the date of filing of the original Complaint, or at the latest, since June 24, 2024, which is the date of service of the original Complaint. ECF Nos. 1, 6.

140. As a result, UPPAbaby’s infringement of the ’568 Patent has been and continues to be knowing, intentional, and willful.

141. At least because of UPPAbaby’s willful infringement of the ’568 Patent, this is an exceptional case, and Baby Jogger is entitled to an award of its reasonable attorneys’ fees pursuant to 35 U.S.C. § 285.

142. As a result of UPPAbaby’s infringement of the ’568 Patent, Baby Jogger has suffered, and will continue to suffer, damage including, but not limited to, monetary damages. Baby Jogger is entitled to recover from UPPAbaby damages adequate to compensate it for such infringement, which have yet to be determined.

COUNT SIX

(Induced Infringement of the ’568 Patent under 35 U.S.C. § 271(b))

143. Baby Jogger realleges and incorporates the preceding paragraphs 1-70 and 123-142 as set forth above.

144. UPPAbaby has had actual knowledge of at least the ’869 Patent and its infringement of the ’869 Patent by the Infringing Products, since at least as early as December 4, 2015, when Baby Jogger sent UPPAbaby a letter notifying it that its Vista stroller infringed, and continues to infringe, the ’869 Patent. Further, the application that issued as the ’568 Patent (U.S. Patent Application No. 16/832,429) was published on July 16, 2020, and thus was publicly available as of that date. As a result, UPPAbaby knew, should have known, or was willfully blind, of the additional patents in the same family as the ’869 Patent, including the ’568 Patent.

145. UPPAbaby has also had actual knowledge of the ’568 Patent and its infringement of the ’568 Patent by the Infringing Products, since at least as early as June 18, 2024, which is the date of filing of the original Complaint, or at the latest, since June 24, 2024, which is the date of service of the original Complaint. ECF Nos. 1, 6.

146. Despite such knowledge of the ’568 Patent, or being willfully blind to the existence of the ’568 Patent, UPPAbaby has provided, and continues to provide, the RumbleSeat, RumbleSeat V2, RumbleSeat V2+, and/or Vista Expansion Tool to its customers and, on information and belief, encourages and aids its customers to use these products in combination with the UPPAbaby Vista and/or Vista V2 stroller in a manner that infringes the ’568 Patent.

147. UPPAbaby has induced, and continues to induce, infringement of the ’568 Patent by actively, knowingly, and intentionally inducing its customers to directly infringe at least claims

1 and 7-9 of the ’568 Patent via use of its RumbleSeat, RumbleSeat V2, RumbleSeat V2+, and/or Vista Expansion Tool in combination with the UPPAbaby Vista and/or Vista V2 stroller.

148. UPPAbaby has induced, and continues to induce, its customers to directly infringe the ’568 Patent through activities such as marketing the Infringing Products to be used in combination, creating and distributing promotional and product literature, and offering technical support for the Infringing Products, each of which are designed to instruct, encourage, direct, enable, and facilitate the use of the RumbleSeat, RumbleSeat V2, RumbleSeat V2+, and/or Vista Expansion Tool in combination with the UPPAbaby Vista and/or Vista V2 stroller in a manner that infringes the ’568 Patent.

149. For example, UPPAbaby markets its Vista V2 stroller as “intuitively designed to ‘grow’ with your family! It starts as a single stroller but can easily transform to accommodate up to three children with added accessories and adapters…”[10] UPPAbaby also provides its customers with manuals that instruct, encourage, direct, enable, and facilitate the use of the RumbleSeat, RumbleSeat V2, RumbleSeat V2+, and/or Vista Expansion Tool in combination with the UPPAbaby Vista and/or Vista V2 stroller in a manner that infringes the ’568 Patent.[11]

150. On information and belief, UPPAbaby has knowingly and intentionally encouraged and aided its customers to directly infringe the ’568 Patent and continues to do so.

151. UPPAbaby’s customers do incorporate the RumbleSeat, RumbleSeat V2, RumbleSeat V2+, and/or Vista Expansion Tool with the UPPAbaby Vista and/or Vista V2 stroller in a manner that infringes the ’568 Patent.

---

[10] https://uppababy.com/strollers/full-size/vista-v2/jake/

[11] *See, e.g.*, https://uppababy.com/wp-content/uploads/2023/09/VistaV2_Manual_230831.pdf; https://uppababy.com/wp-content/uploads/2023/12/0920-RBS_RumbleSeatV2Manual_010523.pdf; https://uppababy.com/wp-content/uploads/2022/10/0918-RBS-USCA_MANUAL.pdf.

152. On information and belief, UPPAbaby specifically intended and intends that its actions will induce infringement of the ’568 Patent, or subjectively believes that its actions will result in infringement of the ’568 Patent. As a direct and proximate result of UPPAbaby’s inducement of infringement of ’568 Patent by its customers, Baby Jogger has been and continues to be damaged.

COUNT SEVEN

(Contributory Infringement of the ’568 Patent under 35 U.S.C. § 271(c))

153. Baby Jogger realleges and incorporates the preceding paragraphs 1-70 and 123-142 as set forth above.

154. UPPAbaby has had actual knowledge of at least the ’869 Patent and its infringement of the ’869 Patent by the Infringing Products, since at least as early as December 4, 2015, when Baby Jogger sent UPPAbaby a letter notifying it that its Vista stroller infringed, and continues to infringe, the ’869 Patent. Further, the application that issued as the ’568 Patent (U.S. Patent Application No. 16/832,429) was published on July 16, 2020, and thus was publicly available as of that date. As a result, UPPAbaby knew, should have known, or was willfully blind, of the additional patents in the same family as the ’869 Patent, including the ’568 Patent.

155. UPPAbaby has also had actual knowledge of the ’568 Patent and its infringement of the ’568 Patent by the Infringing Products, since at least as early as June 18, 2024, which is the date of filing of the original Complaint, or at the latest, since June 24, 2024, which is the date of service of the original Complaint. ECF Nos. 1, 6.

156. Despite such knowledge, UPPAbaby sells and/or offers for sale in the United States, or imports into the United States, the RumbleSeat, RumbleSeat V2, RumbleSeat V2+, and/or Vista Expansion Tool knowing that these components are especially made or adapted for

use in the infringement of the ’568 Patent. There is no other use for these components other than to be incorporated with the UPPAbaby Vista and/or Vista V2 stroller in a manner that infringes the ’568 Patent.

157. UPPAbaby’s customers who purchase a RumbleSeat, RumbleSeat V2, RumbleSeat V2+, and/or Vista Expansion Tool, do so with the sole purpose of incorporating these components with the UPPAbaby Vista and/or Vista V2 stroller in a manner that directly infringes the ’568 Patent and in fact do incorporate these components in a manner that directly infringes the ’568 Patent.

158. UPPAbaby has contributed, and continues to contribute, to the infringement of the ’568 Patent by third parties, including at least its customers, by selling and/or offering to sell in the United States, or importing into the United States, the RumbleSeat, RumbleSeat V2, RumbleSeat V2+, and/or Vista Expansion Tool, each of which are material components of the invention claimed in the ’568 Patent and are not staple articles of commerce suitable for substantial non-infringing use as they can only be used in combination with the UPPAbaby Vista and/or Vista V2 stroller.

159. As a direct and proximate result of UPPAbaby’s contributing to the infringement of ’568 Patent by its customers, Baby Jogger has been and continues to be damaged.

COUNT EIGHT

(Direct Infringement of the ’231 Patent under 35 U.S.C. § 271(a))

160. Baby Jogger realleges and incorporates the preceding paragraphs 1-70 as set forth above.

161. UPPAbaby has been and is directly infringing at least claims 1-5, 15-17, and 19-22 of the ’231 Patent, literally and/or under the doctrine of equivalents, by making, using, offering to

sell, and/or selling within the United States, and/or importing into the United States, the Infringing Products.

162. By way of example, the Infringing Products infringe at least claim 1 of the ’231 Patent because they contain each and every limitation of this claim.

163. Without conceding the preamble is a limitation, the Infringing Products each are “[a] stroller system for supporting a front stroller seat and a rear stroller seat”:

https://uppababy.com/accessories/strollers-accessories/vista-lower-adapter/

164. The Infringing Products include “a pair of rear wheels” and “a pair of front wheels”:

https://uppababy.com/accessories/strollers-accessories/vista-lower-adapter/

165. The Infringing Products also include "a frame including a handle portion, a rear wheel support portion, a front wheel support portion":

https://uppababy.com/accessories/strollers-accessories/vista-lower-adapter/

166. The Infringing Products also include "a folding mechanism connecting the front wheel support portion and the handle portion in both an unfolded configuration and in a folded configuration":

https://uppababy.com/accessories/strollers-accessories/vista-lower-adapter/

https://uppababy.com/strollers/full-size/vista-v2/jake/#details-specifications

167. The Infringing Products likewise include a stroller system "wherein the folding mechanism connects the rear wheel support portion to the front wheel support portion and the handle portion":

https://uppababy.com/accessories/strollers-accessories/vista-lower-adapter/

https://uppababy.com/strollers/full-size/vista-v2/jake/#details-specifications

168. The Infringing Products include a stroller system "wherein the frame includes a stroller seat support portion positioned at a first vertical position adjacent the handle portion":

https://uppababy.com/accessories/strollers-accessories/vista-lower-adapter/

169. The Infringing Products also include a stroller system "wherein the front wheel support portion and the handle portion are substantially parallel when the frame is in the unfolded configuration":

https://uppababy.com/accessories/strollers-accessories/vista-lower-adapter/

170. The Infringing Products include "a front seat attachment configured for attachment to the front wheel support portion at a second vertical position substantially lower than the first vertical position":

https://uppababy.com/accessories/strollers-accessories/vista-lower-adapter/

171. The Infringing Products also include a stroller system "wherein the front seat attachment is configured to releasably connect to and support the front stroller seat in either a forward-facing configuration or a backward-facing configuration":

https://uppababy.com/accessories/strollers-accessories/vista-lower-adapter/

https://uppababy.com/accessories/strollers-accessories/rumbleseat-v2-plus/jake/

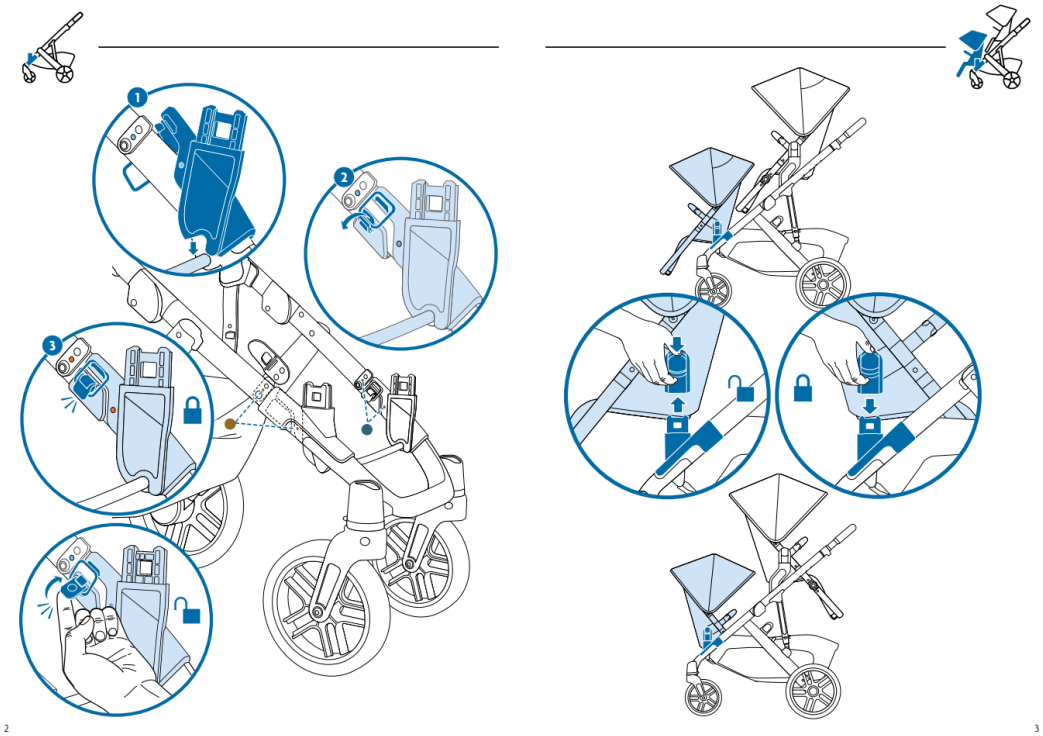

https://uppababy.com/wp-content/uploads/2023/12/0920-RBS_RumbleSeatV2Manual_010523.pdf

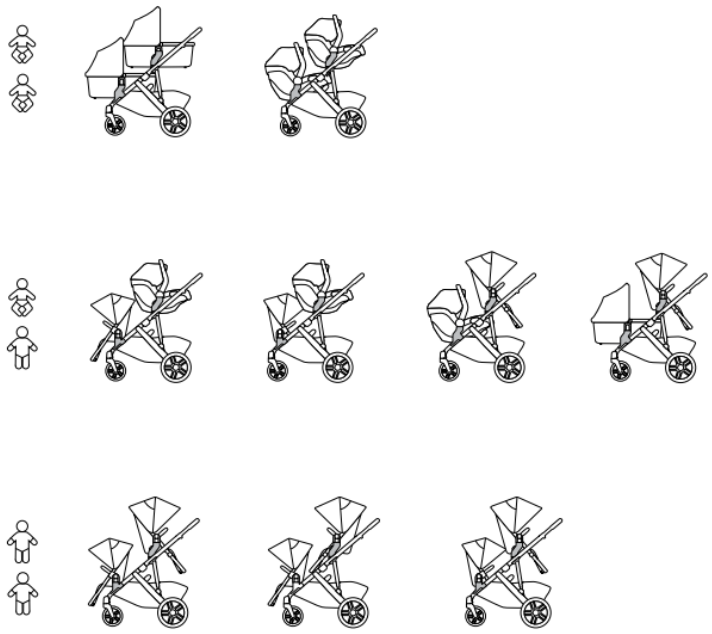

UPPAbaby Vista V2 Manual, at 45 (https://uppababy.com/wp-content/uploads/2023/09/VistaV2_Manual_230831.pdf).

172. The Infringing Products include a stroller system "wherein the front seat attachment is configured to support the front stroller seat substantially over the front wheels so that a center of gravity of the stroller system is between the front wheels and the rear wheels":

https://uppababy.com/accessories/strollers-accessories/rumbleseat-v2-plus/jake/

173. The Infringing Products also include a stroller system "wherein the rear wheel support portion extends diagonally from the front wheel support portion when the frame is in the unfolded configuration":

https://uppababy.com/accessories/strollers-accessories/vista-lower-adapter/

174. The Infringing Products also include a rear wheel support portion that "is disposed adjacent to both the front wheel support portion and the handle portion when the frame is in the folded configuration":

https://uppababy.com/strollers/full-size/vista-v2/jake/#details-specifications

175. The Infringing Products further include a stroller system "wherein the stroller seat support portion positioned at the first vertical position and the front seat attachment at the second vertical position create an inline descending configuration of the rear stroller seat and the front stroller seat":

https://uppababy.com/accessories/strollers-accessories/vista-lower-adapter/

https://uppababy.com/accessories/strollers-accessories/rumbleseat-v2-plus/jake/

176. UPPAbaby does not have a license to practice the technology claimed by the ’231 Patent. UPPAbaby does not have any other authority to practice the technology claimed by the ’231 Patent.

177. UPPAbaby has had actual knowledge of at least the ’869 Patent, as well as its infringement of ’869 Patent by the Infringing Products, since at least as early as December 4, 2015, when Baby Jogger sent UPPAbaby a letter notifying it that its Vista stroller infringed, and continues to infringe, the ’869 Patent. As a result, UPPAbaby knew, should have known, or was willfully blind, of the additional patents in the same family as the ’869 Patent, including the ’231 Patent.

178. UPPAbaby has also had actual knowledge of the ’231 Patent and its infringement of the ’231 Patent by the Infringing Products, since at least as early as June 18, 2024, which is the date of filing of the original Complaint, or at the latest, since June 24, 2024, which is the date of service of the original Complaint. ECF Nos. 1, 6.

179. As a result, UPPAbaby's infringement of the '231 Patent has been and continues to be knowing, intentional, and willful.

180. At least because of UPPAbaby's willful infringement of the '231 Patent, this is an exceptional case, and Baby Jogger is entitled to an award of its reasonable attorneys' fees pursuant to 35 U.S.C. § 285.

181. As a result of UPPAbaby's infringement of the '231 Patent, Baby Jogger has suffered, and will continue to suffer, damage including, but not limited to, monetary damages. Baby Jogger is entitled to recover from UPPAbaby damages adequate to compensate it for such infringement, which have yet to be determined.

COUNT NINE

(Induced Infringement of the '231 Patent under 35 U.S.C. § 271(b))

182. Baby Jogger realleges and incorporates the preceding paragraphs 1-70 and 160-181 as set forth above.

183. UPPAbaby has had actual knowledge of at least the '869 Patent and its infringement of the '869 Patent by the Infringing Products, since at least as early as December 4, 2015, when Baby Jogger sent UPPAbaby a letter notifying it that its Vista stroller infringed, and continues to infringe, the '869 Patent. As a result, UPPAbaby knew, should have known, or was willfully blind, of the additional patents in the same family as the '869 Patent, including the '231 Patent.

184. UPPAbaby has also had actual knowledge of the '231 Patent and its infringement of the '231 Patent, since at least as early as June 18, 2024, which the date of filing of the original Complaint, or at the latest, since June 24, 2024, which is the date of service of the original Complaint. ECF Nos. 1, 6.

185. Despite such knowledge of the ’231 Patent, or being willfully blind to the existence of the ’231 Patent, UPPAbaby has provided, and continues to provide, the RumbleSeat, RumbleSeat V2, RumbleSeat V2+, and/or Vista Expansion Tool to its customers and, on information and belief, encourages and aids its customers to use these products in combination with the UPPAbaby Vista and/or Vista V2 stroller in a manner that infringes the ’231 Patent.

186. UPPAbaby has induced, and continues to induce, infringement of the ’231 Patent by actively, knowingly, and intentionally inducing its customers to directly infringe at least claims 1-5, 15-17, and 19-22 of the ’231 Patent via use of its RumbleSeat, RumbleSeat V2, RumbleSeat V2+, and/or Vista Expansion Tool in combination with the UPPAbaby Vista and/or Vista V2 stroller.

187. UPPAbaby has induced, and continues to induce, its customers to directly infringe the ’231 Patent through activities such as marketing the Infringing Products to be used in combination, creating and distributing promotional and product literature, and offering technical support for the Infringing Products, each of which are designed to instruct, encourage, direct, enable, and facilitate the use of the RumbleSeat, RumbleSeat V2, RumbleSeat V2+, and/or Vista Expansion Tool in combination with the UPPAbaby Vista and/or Vista V2 stroller in a manner that infringes the ’231 Patent.

188. For example, UPPAbaby markets its Vista V2 stroller as “intuitively designed to ‘grow’ with your family! It starts as a single stroller but can easily transform to accommodate up to three children with added accessories and adapters…”[12] UPPAbaby also provides its customers with manuals that instruct, encourage, direct, enable, and facilitate the use of the RumbleSeat,

[12] https://uppababy.com/strollers/full-size/vista-v2/jake/

RumbleSeat V2, RumbleSeat V2+, and/or Vista Expansion Tool in combination with the UPPAbaby Vista and/or Vista V2 stroller in a manner that infringes the ’231 Patent.[13]

189. On information and belief, UPPAbaby has knowingly and intentionally encouraged and aided its customers to directly infringe the ’231 Patent and continues to do so.

190. UPPAbaby’s customers do incorporate the RumbleSeat, RumbleSeat V2, RumbleSeat V2+, and/or Vista Expansion Tool with the UPPAbaby Vista and/or Vista V2 stroller in a manner that infringes the ’231 Patent.

191. On information and belief, UPPAbaby specifically intended and intends that its actions will induce infringement of the ’231 Patent, or subjectively believes that its actions will result in infringement of the ’231 Patent. As a direct and proximate result of UPPAbaby’s inducement of infringement of ’231 Patent by its customers, Baby Jogger has been and continues to be damaged.

COUNT TEN

(Contributory Infringement of the ’231 Patent under 35 U.S.C. § 271(c))

192. Baby Jogger realleges and incorporates the preceding paragraphs 1-70 and 160-181 as set forth above.

193. UPPAbaby has had actual knowledge of at least the ’869 Patent and its infringement of the ’869 Patent by the Infringing Products, since at least as early as December 4, 2015, when Baby Jogger sent UPPAbaby a letter notifying it that its Vista stroller infringed, and continues to

[13] *See, e.g.*, https://uppababy.com/wp-content/uploads/2023/09/VistaV2_Manual_230831.pdf; https://uppababy.com/wp-content/uploads/2023/12/0920-RBS_RumbleSeatV2Manual_010523.pdf; https://uppababy.com/wp-content/uploads/2022/10/0918-RBS-USCA_MANUAL.pdf.

infringe, the ’869 Patent. As a result, UPPAbaby knew, should have known or was willfully blind, of the additional patents in the same family as the ’869 Patent, including the ’231 Patent.

194. UPPAbaby has also had actual knowledge of the ’231 Patent and its infringement of the ’231 Patent, since at least as early as June 18, 2024, which the date of filing of the original Complaint, or at the latest, since June 24, 2024, which is the date of service of the original Complaint. ECF Nos. 1, 6.

195. Despite such knowledge, UPPAbaby sells and/or offers for sale in the United States, or imports into the United States, the RumbleSeat, RumbleSeat V2, RumbleSeat V2+, and/or Vista Expansion Tool knowing that these components are especially made or adapted for use in the infringement of the ’231 Patent. There is no other use for these components other than to be incorporated with the UPPAbaby Vista and/or Vista V2 stroller in a manner that infringes the ’231 Patent.

196. UPPAbaby’s customers who purchase a RumbleSeat, RumbleSeat V2, RumbleSeat V2+, and/or Vista Expansion Tool, do so with the sole purpose of incorporating these components with the UPPAbaby Vista and/or Vista V2 stroller in a manner that directly infringes the ’231 Patent and in fact do incorporate these components in a manner that directly infringes the ’231 Patent.

197. UPPAbaby has contributed, and continues to contribute, to the infringement of the ’231 Patent by third parties, including at least its customers, by selling and/or offering to sell in the United States, or importing into the United States, the RumbleSeat, RumbleSeat V2, RumbleSeat V2+, and/or Vista Expansion Tool, each of which are material components of the invention claimed in the ’231 Patent and are not staple articles of commerce suitable for substantial

noninfringing use as they can only be used in combination with the UPPAbaby Vista and/or Vista V2 stroller.

198. As a direct and proximate result of UPPAbaby's contributing to the infringement of '231 Patent by its customers, Baby Jogger has been and continues to be damaged.

COUNT ELEVEN

(Direct Infringement of the '729 Patent under 35 U.S.C. § 271(a))

199. Baby Jogger realleges and incorporates the preceding paragraphs 1-70 as set forth above.

200. UPPAbaby has been and is directly infringing at least claims 1-5 and 15-22 of the '729 Patent, literally and/or under the doctrine of equivalents, by making, using, offering to sell, and/or selling within the United States, and/or importing into the United States, the Infringing Products.

201. By way of example, the Infringing Products infringe at least claim 1 of the '729 Patent because they contain each and every limitation of this claim.

202. Without conceding the preamble is a limitation, the Infringing Products each are "[a] stroller system for supporting a front stroller seat and a rear stroller seat":

https://uppababy.com/accessories/strollers-accessories/vista-lower-adapter/

203. The Infringing Products include "a pair of rear wheels" and "a pair of from wheels":

https://uppababy.com/accessories/strollers-accessories/vista-lower-adapter/

204. The Infringing Products further include "a frame including a handle portion, a rear wheel support portion, a front wheel support portion":

https://uppababy.com/accessories/strollers-accessories/vista-lower-adapter/

205. The Infringing Products likewise include "a folding mechanism connecting the front wheel support portion and the handle portion in both an unfolded configuration and in a folded configuration,":

https://uppababy.com/accessories/strollers-accessories/vista-lower-adapter/

https://uppababy.com/strollers/full-size/vista-v2/jake/#details-specifications

206. The Infringing Products also include a stroller system "wherein the frame includes a stroller seat support portion positioned at a first vertical position adjacent the handle portion":

https://uppababy.com/accessories/strollers-accessories/vista-lower-adapter/

207. The Infringing Products further include a frame "wherein the front wheel support portion and the handle portion are parallel when the frame is in the unfolded configuration":

https://uppababy.com/accessories/strollers-accessories/vista-lower-adapter/

208. The Infringing Products also include "a front seat attachment configured for attachment to the front wheel support portion at a second vertical position substantially lower than the first vertical position":

https://uppababy.com/accessories/strollers-accessories/vista-lower-adapter/

209. The Infringing Products likewise include a front seat attachment that "is configured to releasably connect to and support the front stroller seat in either a forward-facing configuration or a backward-facing configuration":

https://uppababy.com/accessories/strollers-accessories/vista-lower-adapter/

https://uppababy.com/accessories/strollers-accessories/rumbleseat-v2-plus/jake/

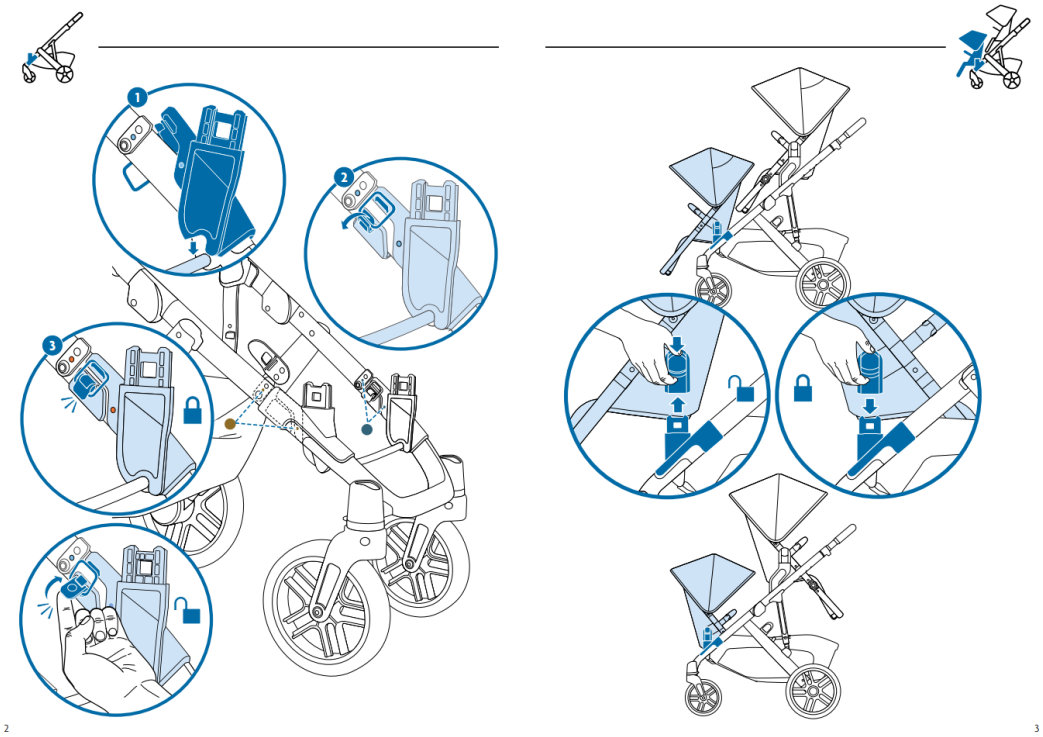

https://uppababy.com/wp-content/uploads/2023/12/0920-RBS_RumbleSeatV2Manual_010523.pdf

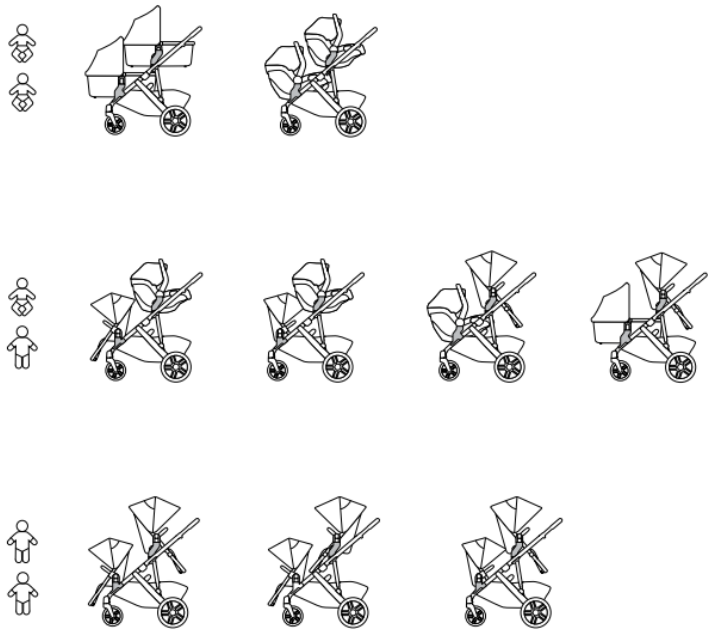

UPPAbaby Vista V2 Manual, at 45 (https://uppababy.com/wp-content/uploads/2023/09/VistaV2_Manual_230831.pdf).

210. The Infringing Products also include a front seat attachment that "is configured to support the front stroller seat substantially over the front wheels so that a center of gravity of the stroller system is between the front wheels and the rear wheels":

https://uppababy.com/accessories/strollers-accessories/rumbleseat-v2-plus/jake/

211. The Infringing Products further include a "rear wheel support portion [that] extends diagonally relative to the front wheel support portion when the frame is in the unfolded configuration":

https://uppababy.com/accessories/strollers-accessories/vista-lower-adapter/

212. The Infringing Products also include a rear wheel support portion that "is disposed adjacent to both the front wheel support portion and the handle portion when the frame is in the folded configuration":

https://uppababy.com/strollers/full-size/vista-v2/jake/#details-specifications

213. The Infringing Products further include a "stroller seat support portion positioned at the first vertical position and the front seat attachment at the second vertical position create an inline descending configuration of the rear stroller seat and the front stroller seat":

https://uppababy.com/accessories/strollers-accessories/vista-lower-adapter/

https://uppababy.com/accessories/strollers-accessories/rumbleseat-v2-plus/jake/

214. UPPAbaby does not have a license to practice the technology claimed by the ’729 Patent. UPPAbaby does not have any other authority to practice the technology claimed by the ’729 Patent.

215. UPPAbaby has had actual knowledge of at least the ’869 Patent, as well as its infringement of ’869 Patent by the Infringing Products, since at least as early as December 4, 2015, when Baby Jogger sent UPPAbaby a letter notifying it that its Vista stroller infringed, and continues to infringe, the ’869 Patent. As a result, UPPAbaby knew, should have known, or was willfully blind, of the additional patents in the same family as the ’869 Patent, including the ’729 Patent.

216. UPPAbaby has also had actual knowledge of the ’729 Patent and its infringement of the ’729 Patent by the Infringing Products, since at least as early as June 18, 2024, which is the date of filing of the original Complaint, or at the latest, since June 24, 2024, which is the date of service of the original Complaint. ECF Nos. 1, 6.

217. As a result, UPPAbaby’s infringement of the ’729 Patent has been and continues to be knowing, intentional, and willful.

218. At least because of UPPAbaby’s willful infringement of the ’729 Patent, this is an exceptional case, and Baby Jogger is entitled to an award of its reasonable attorneys’ fees pursuant to 35 U.S.C. § 285.

219. As a result of UPPAbaby’s infringement of the ’729 Patent, Baby Jogger has suffered, and will continue to suffer, damage including, but not limited to, monetary damages. Baby Jogger is entitled to recover from UPPAbaby damages adequate to compensate it for such infringement, which have yet to be determined.

COUNT TWELVE

(Induced Infringement of the ’729 Patent under 35 U.S.C. § 271(b))

220. Baby Jogger realleges and incorporates the preceding paragraphs 1-70 and 199-219 as set forth above.

221. UPPAbaby has had actual knowledge of at least the ’869 Patent and its infringement of the ’869 Patent by the Infringing Products, since at least as early as December 4, 2015, when Baby Jogger sent UPPAbaby a letter notifying it that its Vista stroller infringed, and continues to infringe, the ’869 Patent. Further, the application that issued as the ’729 Patent (U.S. Patent Application No. 18/051,053) was published on March 2, 2023, and thus was publicly available as of that date. As a result, UPPAbaby knew, should have known, or was willfully blind, of the additional patents in the same family as the ’869 Patent, including the ’729 Patent.

222. UPPAbaby has had actual knowledge of the ’729 Patent and its infringement of the ’729 Patent by the Infringing Products, since at least as early as June 18, 2024, which is the date of filing of the original Complaint, or at the latest, June 24, 2024, which is the date of service of the original Complaint. ECF Nos. 1, 6.

223. Despite such knowledge of the ’729 Patent, or being willfully blind to the existence of the ’729 Patent, UPPAbaby has provided, and continues to provide, the RumbleSeat, RumbleSeat V2, RumbleSeat V2+, and/or Vista Expansion Tool to its customers and, on information and belief, encourages and aids its customers to use these products in combination with the UPPAbaby Vista and/or Vista V2 stroller in a manner that infringes the ’729 Patent.

224. UPPAbaby has induced, and continues to induce, infringement of the ’729 Patent by actively, knowingly, and intentionally inducing its customers to directly infringe at least claims

1-5 and 15-22 of the ’729 Patent via use of its RumbleSeat, RumbleSeat V2, RumbleSeat V2+, and/or Vista Expansion Tool in combination with the UPPAbaby Vista and/or Vista V2 stroller.

225. UPPAbaby has induced, and continues to induce, its customers to directly infringe the ’729 Patent through activities such as marketing the Infringing Products to be used in combination, creating and distributing promotional and product literature, and offering technical support for the Infringing Products, each of which are designed to instruct, encourage, direct, enable, and facilitate the use of the RumbleSeat, RumbleSeat V2, RumbleSeat V2+, and/or Vista Expansion Tool in combination with the UPPAbaby Vista and/or Vista V2 stroller in a manner that infringes the ’729 Patent.

226. For example, UPPAbaby markets its Vista V2 stroller as “intuitively designed to ‘grow’ with your family! It starts as a single stroller but can easily transform to accommodate up to three children with added accessories and adapters…”[14] UPPAbaby also provides its customers with manuals that instruct, encourage, direct, enable, and facilitate the use of the RumbleSeat, RumbleSeat V2, RumbleSeat V2+, and/or Vista Expansion Tool in combination with the UPPAbaby Vista and/or Vista V2 stroller in a manner that infringes the ’729 Patent.[15]

227. On information and belief, UPPAbaby has knowingly and intentionally encouraged and aided its customers to directly infringe the ’729 Patent and continues to do so.

228. UPPAbaby’s customers do incorporate the RumbleSeat, RumbleSeat V2, RumbleSeat V2+, and/or Vista Expansion Tool with the UPPAbaby Vista and/or Vista V2 stroller in a manner that infringes the ’729 Patent.

---

[14] https://uppababy.com/strollers/full-size/vista-v2/jake/

[15] *See, e.g.*, https://uppababy.com/wp-content/uploads/2023/09/VistaV2_Manual_230831.pdf; https://uppababy.com/wp-content/uploads/2023/12/0920-RBS_RumbleSeatV2Manual_010523.pdf; https://uppababy.com/wp-content/uploads/2022/10/0918-RBS-USCA_MANUAL.pdf.

229. On information and belief, UPPAbaby specifically intended and intends that its actions will induce infringement of the ’729 Patent, or subjectively believes that its actions will result in infringement of the ’729 Patent. As a direct and proximate result of UPPAbaby’s inducement of infringement of ’729 Patent by its customers, Baby Jogger has been and continues to be damaged.

COUNT THIRTEEN

(Contributory Infringement of the ’729 Patent under 35 U.S.C. § 271(c))

230. Baby Jogger realleges and incorporates the preceding paragraphs 1-70 and 199-219 as set forth above.

231. UPPAbaby has had actual knowledge of at least the ’869 Patent and its infringement of the ’869 Patent by the Infringing Products, since at least as early as December 4, 2015, when Baby Jogger sent UPPAbaby a letter notifying it that its Vista stroller infringed, and continues to infringe, the ’869 Patent. Further, the application that issued as the ’729 Patent (U.S. Patent Application No. 18/051,053) was published on March 2, 2023, and thus was publicly available as of that date. As a result, UPPAbaby knew, should have known, or was willfully blind, of the additional patents in the same family as the ’869 Patent, including the ’729 Patent.

232. UPPAbaby has had actual knowledge of the ’729 Patent and its infringement of the ’729 Patent by the Infringing Products, since at least as early as June 18, 2024, which is the date of filing of the original Complaint, or at the latest, June 24, 2024, which is the date of service of the original Complaint. ECF Nos. 1, 6.

233. Despite such knowledge, UPPAbaby sells and/or offers for sale in the United States, or imports into the United States, the RumbleSeat, RumbleSeat V2, RumbleSeat V2+, and/or Vista Expansion Tool knowing that these components are especially made or adapted for

use in the infringement of the ’729 Patent. There is no other use for these components other than to be incorporated with the UPPAbaby Vista and/or Vista V2 stroller in a manner that infringes the ’729 Patent.

234. UPPAbaby’s customers who purchase a RumbleSeat, RumbleSeat V2, RumbleSeat V2+, and/or Vista Expansion Tool, do so with the sole purpose of incorporating these components with the UPPAbaby Vista and/or Vista V2 stroller in a manner that directly infringes the ’729 Patent and in fact do incorporate these components in a manner that directly infringes the ’729 Patent.

235. UPPAbaby has contributed, and continues to contribute, to the infringement of the ’729 Patent by third parties, including at least its customers, by selling and/or offering to sell in the United States, or importing into the United States, the RumbleSeat, RumbleSeat V2, RumbleSeat V2+, and/or Vista Expansion Tool, each of which are material components of the invention claimed in the ’729 Patent and are not staple articles of commerce suitable for substantial non-infringing use as they can only be used in combination with the UPPAbaby Vista and/or Vista V2 stroller.

236. As a direct and proximate result of UPPAbaby’s contributing to the infringement of ’729 Patent by its customers, Baby Jogger has been and continues to be damaged.

JURY TRIAL DEMAND

Pursuant to Rule 38(b) of the Federal Rules of Civil Procedure, Baby Jogger hereby demands a trial by jury on all issues so triable.

PRAYER FOR RELIEF

WHEREFORE, Baby Jogger respectfully requests that this Court enter judgment and provide relief as follows:

a. Entering judgment that UPPAbaby has infringed one or more claims of each of the Asserted Patents, in violation of 35 U.S.C. §§ 271(a)-(c);

b. Awarding damages adequate to compensate Baby Jogger for UPPAbaby's infringement of the Asserted Patents, together with pre-judgment and post-judgment interest and costs, pursuant to 35 U.S.C. § 284;

c. Ordering that UPPAbaby account for additional damages for any and all periods of infringement not included in the damages awarded by this Court or jury, including any post-verdict infringement;

d. Entering judgment that UPPAbaby has willfully infringed the Asserted Patents;

e. Trebling the damages awarded for UPPAbaby's infringement, pursuant to 35 U.S.C. § 284;

f. Declaring that this is an exceptional case under 35 U.S.C. § 285, and awarding Baby Jogger its reasonable attorneys' fees and costs incurred in this action;

g. Permanently enjoining UPPAbaby, and its respective offers, agents, servants, employees, attorneys, and all persons in active concert or participation with any of them directly or indirectly, from making, using, offering for sale, and/or selling within the United States, and/or importing into the United States, the Infringing Products and any products that infringe the Asserted Patents prior to the expiration of those patents, including any extensions; and

h. Awarding Baby Jogger such other equitable or legal relief as the Court may deem just and proper.

Respectfully submitted,

/s/ Michael M. Filbin

Wendy K. Venoit (BBO No. 568657)
Michael M. Filbin (BBO No. 705341)
COZEN O'CONNOR
200 State Street, Suite 1105
Boston, MA 02109
Tel: (617) 849-5002
wvenoit@cozen.com
mfilbin@cozen.com

John W. Harbin (Admitted *pro hac vice*)
Georgia State Bar No. 324130
Gregory J. Carlin (Admitted *pro hac vice*)
Georgia State Bar No. 455865
Walter Hill Levie III (Admitted *pro hac vice*)
Georgia State Bar No. 415569
Robert J. Leonard (Admitted *pro hac vice*)
Georgia State Bar No. 303694
MEUNIER CARLIN & CURFMAN LLC
999 Peachtree Street N.E., Suite 1300
Atlanta, Georgia 30309
Telephone: (404) 645-7700
Facsimile: (404) 645-7707
jharbin@mcciplaw.com
gcarlin@mcciplaw.com
tlevie@mcciplaw.com
rleonard@mcciplaw.com

Attorneys for Plaintiff Baby Jogger, LLC

Dated: September 27, 2024

CERTIFICATE OF SERVICE

I hereby certify that a true copy of the above document was served upon the attorney of record for each other party through the Court's electronic filing service on September 27, 2024.

Date: September 27, 2024

/s/ Michael M. Filbin
Michael M. Filbin