IN THE UNITED STATES DISTRICT COURT
FOR THE DISTRICT OF MASSACHUSETTS

BABY JOGGER, LLC, Plaintiff, v. MONAHAN PRODUCTS, LLC, D/B/A UPPABABY, Defendant.	Civil Action No. 1:24-CV-11582-ADB

PLAINTIFF BABY JOGGER, LLC'S
RESPONSIVE CLAIM CONSTRUCTION BRIEF

TABLE OF CONTENTS

I. INTRODUCTION 1
II. DISPUTED CLAIM TERMS 2
A. "Connector portion" 2
1. UPPAbaby improperly imports limitations into the claims 3
2. The prosecution history does not support UPPAbaby's proposed construction 5
B. "Rotated with respect to" 6
C. "Handle portion" 8
D. "Adjacent" 9
E. "Closer to" 14
F. "Substantially parallel" 17
1. The claim language of the '568 Patent is definite, as the scope of this claim is readily apparent to a POSITA 18
2. The claim language of the '231 Patent is definite, as the scope of this claim is readily apparent to a POSITA 20
III. CONCLUSION 20

TABLE OF AUTHORITIES

CASES **Page(s)**

BASF Corp. v. Johnson Matthey Inc.,
875 F.3d 1360 (Fed. Cir. 2017).....16

ClearOne, Inc. v. Shure Acquisition Holdings, Inc.,
35 F.4th 1345 (Fed. Cir. 2022) 16

Cordis Corp. v. Bos. Sci. Corp.,
561 F.3d 1319 (Fed. Cir. 2009).....6, 8, 9, 13

Deere & Co. v. Bush Hog, LLC,
703 F.3d 1349 (Fed. Cir. 2012).....16, 18, 19, 20

Ecolab, Inc. v. Envirochem, Inc.,
264 F.3d 1358 (Fed. Cir. 2001).....18

Intamin Ltd. v. Magnetar Techs., Corp.,
483 F.3d 1328 (Fed. Cir. 2007).....4

In re Katz Interactive Call Processing Patent Litig.,
639 F.3d 1303 (Fed. Cir. 2011).....11

Laitram, LLC v. Ashworth Bros.,
No. 2022-1044, 2023 WL 3449148 (Fed. Cir. May 15, 2023).....7

Littelfuse, Inc. v. Mersen USA EP Corp.,
29 F.4th 1376 (Fed. Cir. 2022) 4

MBO Labs., Inc. v. Becton, Dickinson & Co.,
474 F.3d 1323 (Fed. Cir. 2007).....7, 11

Nevro Corp. v. Bos. Sci. Corp.,
955 F.3d 35 (Fed. Cir. 2020).....16

Northern Telecom, Inc. v. Datapoint Corp.,
908 F.2d 931 (Fed. Cir. 1990).....15

Oatey Co. v. IPS Corp.,
514 F.3d 1271 (Fed. Cir. 2008).....11

On–Line Techs., Inc. v. Bodenseewerk Perkin–Elmer GmbH,
386 F.3d 1133 (Fed. Cir. 2004).....11

In re Packard,
751 F.3d 1307 (Fed. Cir. 2014).....16

Phillips v. AWH Corp.,
415 F.3d 1303 (Fed. Cir. 2005).....3, 9

PowerOasis, Inc. v. T-Mobile USA, Inc.,
522 F.3d 1299 (Fed. Cir. 2008).....16

Tinnus Enterprises, LLC v. Telebrands Corp.,
733 F. App'x 1011 (Fed. Cir. 2018) 15

STATUTE(S) **Page(s)**

35 U.S.C. § 112.....16

MOCKINGBIRD ET AL. EX1081
MOCKINGBIRD ET AL. V. BABY JOGGER
IPR2025-01095

I. INTRODUCTION

The claims of the Asserted Patents clearly and accurately describe the features of Plaintiff Baby Jogger, LLC's ("Baby Jogger") innovative single-to-double stroller using language that is both straightforward and commonly understood. Defendant Monahan Products, LLC d/b/a UPPAbaby ("UPPAbaby") attempts to cast doubt on this clarity by suggesting that Baby Jogger invented terminology to describe features of the claimed invention. This assertion is baseless. The claim terms are readily understood by a person of ordinary skill in the art ("POSITA") and reflect the invention's true scope. UPPAbaby's proposed constructions consistently attempt to improperly narrow the scope of the claims by importing extraneous limitations that are not found in the claim language or otherwise supported by the intrinsic record. Tellingly, UPPAbaby's opening brief fails to provide support for these narrowed interpretations. Accordingly, the disputed claim terms do not require construction and should be given their plain and ordinary meaning.

UPPAbaby's indefiniteness arguments are equally flawed. The claim terms "closer to" and "substantially parallel" are neither ambiguous nor imprecise; they are commonly understood words with well-understood meanings. A POSITA would readily comprehend these terms and the scope of the claims with reasonable certainty. UPPAbaby falls far short of satisfying the strict standard required to establish indefiniteness by clear and convincing evidence.

UPPAbaby's reliance on the Declaration of William Buddy Clark Concerning Claim Construction (ECF 58-10) does not alter the analysis. Mr. Clark acknowledged that he played no role in selecting the claim terms at issue and had minimal, if any, involvement in formulating UPPAbaby's proposed constructions.[1] Rather than offering an independent expert assessment, Mr.

[1] Ex. I, Deposition Transcript of William Clark ("Clark Tr.") at 21:23-25:16, 35:5-16. Documents labeled "Ex." are attached as exhibits to the concurrently filed Declaration of Robert J. Leonard in Support of Plaintiff's Responsive Claim Construction Brief.

MOCKINGBIRD ET AL. EX1081
MOCKINGBIRD ET AL. V. BABY JOGGER
IPR2025-01095

Clark simply adopted the positions taken by UPPAbaby. His declaration offers no new analysis or substantive basis that would warrant departing from the plain and ordinary meaning of the disputed claims or support a finding of indefiniteness.

Accordingly, the Court should adopt the plain and ordinary meaning of each disputed claim term and reject UPPAbaby's proposed constructions and indefiniteness challenges.

II. DISPUTED CLAIM TERMS

A. "Connector portion"

Baby Jogger's Proposed Construction	UPPAbaby's Proposed Construction
Does not require construction. Alternatively, plain and ordinary meaning, which is "feature that is capable of connecting to a stroller frame"	Male mating element that attaches by insertion into a corresponding part.

Contrary to UPPAbaby's position, "connector portion" is not a term Baby Jogger made up. *See* ECF 58 at 11.[2] The claim term "connector portion" means precisely what it says – it is the portion that connects to the stroller frame.[3] This claim language is unambiguous, and the specification confirms this understanding, consistently describing this feature as the portion that connects to the stroller frame. *See, e.g.*, ECF 57 at 13-15. In fact, UPPAbaby's expert agreed that the claim term "connector" was not ambiguous and meant "something connects to something else." Ex. I, Clark Tr. at 36:18-23. This is consistent with the plain and ordinary meaning of this claim term, which is a "feature that is capable of connecting to a stroller frame." In arguing that this term requires construction, UPPAbaby attempts to improperly import limitations into the claims that lack any support in the intrinsic record. No construction is necessary for this claim term.

---

[2] Unless stated otherwise, citations to the docket are to the docket page number as opposed to the document page number.

[3] In Baby Jogger's Opening Claim Construction Brief, it notes that claims of each of the Asserted Patent incorporate the claim term "connector portion," with the exception of the '568 Patent. ECF 57 at 12. To clarify, none of the ***Asserted Claims*** of the '568 Patent incorporate this claim language; this claim term is found in unasserted dependent claims 5, 14, 18.

1. UPPAbaby improperly imports limitations into the claims

UPPAbaby's proposed construction – "male mating element that attaches by insertion into a corresponding part" – is inconsistent with the intrinsic record. As confirmed by UPPAbaby's expert, the terms "male mating element" and "attaches by insertion into a corresponding part" are not found in the intrinsic record. Ex. I, Clark Tr. at 38:16-40:22, 55:5-12, 65:10-15. Not only is the language proposed by UPPAbaby not found in the intrinsic record, but the specification expressly contradicts its overly narrow construction, explaining that any number of different connections or attachments could be incorporated. ECF 57-5, '231 Patent, 4:30-33, 6:50-54.

UPPAbaby and its expert rely heavily on dependent claims that add additional limitations to the claimed attachment frame members as support for its proposed construction. ECF 58 at 11; ECF 58-10, ¶¶ 34-42. But in doing so, they attempt to import limitations from the dependent claims into the independent claims. For example, dependent claim 7 of the '869 Patent adds the limitation of a "slot for removably receiving the connection portion…." ECF 57-2, '869 Patent, 10:61-63. Dependent claim 10 of the '231 Patent and '729 Patent similarly add "left and right slots…configured to receive the first connector portion and the second connector portion." ECF 57-5, '231 Patent, 18:16-19; ECF 57-6, '729 Patent, 18:15-18. UPPAbaby and its expert argue that the existence of this slot limitation in the **dependent claims** means that the connector portion of the **independent claims** must also be configured to be "removably receiv[ed]" by the slot. ECF 58 at 11; ECF 58-10, ¶¶ 36-42. This argument is improper and fails for several reasons.

The relevant independent claims contain no language requiring a slot, a male mating element, or attachment by insertion into a corresponding part. In making this argument, UPPAbaby renders the dependent claims superfluous by improperly importing these additional limitations into the independent claims. *Phillips v. AWH Corp.*, 415 F.3d 1303, 1315 (Fed. Cir. 2005) ("the presence of a dependent claim that adds a particular limitation gives rise to a presumption that the

MOCKINGBIRD ET AL. EX1081
MOCKINGBIRD ET AL. V. BABY JOGGER
IPR2025-01095

limitation in question is not present in the independent claim."). UPPAbaby's expert acknowledged he had not considered this consequence. Ex. I, Clark Tr. at 43:25-46:22. While it may be reasonable to infer that the "connector portion" must be configured to be "removably receiv[ed]" by the slot for the dependent claims, there is no such requirement in the independent claims. Instead, the "connector portion" of the independent claims encompasses configurations in which they are received into a slot, but the claim language is not limited to this single embodiment. *Littelfuse, Inc. v. Mersen USA EP Corp.*, 29 F.4th 1376, 1380 (Fed. Cir. 2022) ("By definition, an independent claim is broader than a claim that depends from it…."); *Intamin Ltd. v. Magnetar Techs., Corp.*, 483 F.3d 1328, 1335 (Fed. Cir. 2007) ("An independent claim impliedly embraces more subject matter than its narrower dependent claim."). As the specification discloses, the connector portion can be removably connected to the stroller frame using any number of "clamping or attachment means." ECF 57-5, '231 Patent, 6:50-54. A clamping means is inconsistent with a male/female connection. While the specification explains that "connector portion 21 ***may be*** inserted into a cylindrical slot 18," this is simply one example of a connector portion. ECF 57-2, '869 Patent, 6:55-56 (emphasis added); ECF 57-5, '231 Patent, 6:40-41 (emphasis added).

The claim language that does not reference a "slot" also consistently use the terms "removably ***connecting***," "releasably ***connected***," or "removably ***attach***," when claiming the connector portion's relationship to the stroller frame.[4] The dependent claims that add the "slot" limitation instead use the phrase "removably ***receiving***" or "configured to ***receive***" when claiming the slot's relationship to the connector portion.[5] UPPAbaby's expert confirmed that the use of the

[4] *See, e.g.*, ECF 57-2, '869 Patent, 10:25-26, 10:34-35; ECF 57-3, '550 Patent, 10:33-34, 10:39-40; ECF 57-5, '231 Patent, 17:55-59; ECF 57-6, '729 Patent, 17:53-57.
[5] *See, e.g.*, ECF 57-2, '869 Patent, 10:61-63; ECF 57-5, '231 Patent, 18:16-19; ECF 57-6, '729 Patent, 18:15-18.

MOCKINGBIRD ET AL. EX1081
MOCKINGBIRD ET AL. V. BABY JOGGER
IPR2025-01095

term "receiving" in connection with the "slot" in the dependent claims, language not found in the independent claims, was important in understanding this claim language. Ex. I, Clark Tr. at 51:14-54:16; ECF 58-10, ¶ 36. This use of distinct language highlights the difference in the scope of these independent and dependent claims.

UPPAbaby also erroneously states in its brief that the specifications "do not show or describe any other embodiment of a 'connector portion' that is not a male mating element that attaches by insertion into a corresponding part." ECF 58 at 12. But the specification expressly contemplates a plethora of different clamps or attachments. ECF 57-5, '231 Patent, 6:50-54. Furthermore, while UPPAbaby and its expert selectively refer to certain example embodiments in the figures, they overlook those figures that do not contain a slot. ECF 57-5, '231 Patent, Figs. 8A, 8C-8H; Ex. I, Clark Tr. at 50:14-51:13.

2. The prosecution history does not support UPPAbaby's proposed construction

UPPAbaby misleadingly relies on excerpts of the prosecution history of U.S. Patent Application No. 12/631,375 ("'375 Application"), arguing that Baby Jogger was required to make further amendments after clarifying the connector portions were "reversibly" connecting to the frame. ECF 58 at 12-13. But Baby Jogger did not make any additional amendments that support UPPAbaby's proposed construction. Ex. J at BJvU0001159-66. The examiner cited U.S. Patent No. 7,475,900 ("Cheng"), a double stroller whose seat attachments are permanently attached to the frame and not reversibly connected. Ex. J at BJvU0001168-69. Responding to this argument, Baby Jogger pointed to these distinguishing features, noting that, unlike Cheng, the "connector portion" of the claimed invention "reversibly, or removably, connects to the attachment portion of the stroller." *Id.* at BJvU-0001168. It then provided an example of this reversible and removable connection, describing an embodiment in which the connector portion "***may simply be*** a frame

member that is received in a slot in the attachment portion of the stroller." *Id.* at BJvU-0001168-69 (emphasis added). This explanation in no way limited the invention to this embodiment, nor did it argue that a slot or a male mating element was a reason that distinguished it from Cheng. *See Cordis Corp. v. Bos. Sci. Corp.*, 561 F.3d 1319, 1329 (Fed. Cir. 2009) ("A disclaimer must be 'clear and unmistakable,' and unclear prosecution history cannot be used to limit claims."). The only amendments made to the claim language clarified that the seat attachment members were removable and reversible. Ex. J at BJvU-0001076-82, 1160-66. UPPAbaby's argument that Baby Jogger was forced to amend its claims more narrowly misrepresents the prosecution history.

UPPAbaby's arguments lack merit, no construction is necessary, and the plain and ordinary meaning of "connector portion" should be adopted.

B. "Rotated with respect to"

Baby Jogger's Proposed Construction	UPPAbaby's Proposed Construction
Does not require construction. Alternatively, plain and ordinary meaning, which is "one component rotated relative to another component"	Rotatably coupled at a common pivot point.

This claim term describes a situation where one component is rotated relative to another component. *See, e.g.*, Ex. I, Clark Tr. at 73:8-74:6. Here, the back wheel support frames are rotated relative to the upper tube support frames. ECF 57-4, '568 Patent, 17:35-38. Neither the claim language nor the specification contains additional requirements, such as rotation at a common pivot point. Instead, the specification describes embodiments in which these components can be directly or indirectly coupled, confirming this language is *not* limited to a common pivot point. ECF 57-4, '568 Patent, 9:38-44. Because the claim language means precisely what it says, no construction is necessary, and the plain and ordinary meaning should be adopted.

UPPAbaby's proposed construction again finds no support in the intrinsic record, as the terms "rotatably coupled at a common pivot point" are not found. *See, e.g.*, Ex. I, Clark Tr. at 74:7-

75:4. UPPAbaby primarily relies on example embodiments shown in the figures but is unable to demonstrate that the claim language should be limited only to these example embodiments. *See, e.g.*, *Laitram, LLC v. Ashworth Bros.*, No. 2022-1044, 2023 WL 3449148, at *6 (Fed. Cir. May 15, 2023) (declining to limit claim scope to example embodiments); *MBO Labs., Inc. v. Becton, Dickinson & Co.,* 474 F.3d 1323, 1333 (Fed. Cir. 2007) (same). UPPAbaby's expert confirmed that, other than the figures, there was nothing in the specification to support UPPAbaby's proposed construction. Ex. I, Clark Tr. at 79:1-80:5 ("So I have no other basis but to say they are like what is shown in that figure."). He was also unable to provide any support for the statement in his declaration that the specification of the '568 Patent "describes only rotational coupling between elements at a common pivot point." *Id.* at 81:17-82:6; ECF 58-10, ¶ 63. UPPAbaby's brief cites language from the specification discussing an exemplary embodiment in which components are "rotatably coupled and rotatably adjustable about one or more axes defined through the folding mechanism." ECF 58 at 14 (quoting ECF 57-4,'568 Patent, 9:44-49). But it fails to explain how this language imposes a limitation that requires a common pivot point. Moreover, it disregards the immediately preceding language describing embodiments in which components are indirectly coupled to the folding mechanism. ECF 57-4, '568 Patent, 9:40-44. This selective reading of the specification does not support UPPAbaby's overly narrow construction.

During prosecution of a different application, U.S. Patent Application No. 15/912,901 ("'901 Application"),[6] Baby Jogger distinguished the Cheng prior art from the claimed invention for multiple reasons, including that it lacked seat attachment adapters that were removably coupled to the stroller frame, and that the identified handle was not coupled to the upper tube support frames. Ex. K at BJvU-0002232. Baby Jogger explained that the examiner had improperly

[6] This application issued as U.S. Patent No. 10,730,543, which is not asserted in this litigation.

identified components of Cheng, and explained "element 31 is rotatable with respect to element, 32, which the Examiner alleges is the back wheel support frame. Element 31 does not rotate [with] response to element 10 of Cheng." Ex. K at BJvU-0002233. Notably, there is no discussion regarding a common pivot point. Contrary to UPPAbaby's assertion, nothing about this statement represents a clear and unmistakable limitation of the scope of the claim language to being "rotatably coupled at a common pivot point." *Cordis*, 561 F.3d at 1329.

UPPAbaby's arguments lack merit, no construction is necessary, and the plain and ordinary meaning of "rotated with respect to" should be adopted.

C. "Handle portion"

Baby Jogger's Proposed Construction	UPPAbaby's Proposed Construction
Does not require construction. Alternatively, plain and ordinary meaning, which is "portion of frame coupled to the left and right upper tube support frame"	Lateral frame portion that is grasped when pushing the stroller.

The intrinsic record is clear that the "handle portion" is a part of the stroller frame that connects to the upper tube support frame. *See, e.g.*, ECF 57-5, '231 Patent, 9:1-4, 17:14, Fig. 8A. This claim term has no special meaning, and the language is unambiguous. Thus, no construction is required. UPPAbaby again proposes a construction that lacks support in the intrinsic record, as the language "lateral frame portion" is never used. Ex. I, Clark Tr. at 91:11-24. UPPAbaby's brief erroneously argues that throughout the claims, "the handle portion is consistently used as a lateral frame portion that is grasped when pushing the stroller." ECF 58 at 18. But there is no language in any of the claims that supports this argument, as many of these terms are never used.

UPPAbaby relies on Figures 8A and 9 of the '231 Patent for support, but both figures depict a handle portion coupled to the left and right upper tube support frame, consistent with Baby Jogger's plain and ordinary meaning for this claim term. Neither figure shows a lateral frame portion. While the claimed handle portion may include a lateral frame portion that connects to the

opposite sides of the upper tube support frame, the claims are not limited to this feature. UPPAbaby's brief also fails to address the dependent claims, which add the limitation of a crossbar (or a lateral frame portion that is grasped when pushing the stroller) that UPPAbaby is attempting to import into the independent claims. ECF 57-5, '231 Patent, 18:32-39; ECF 57-6, '729 Patent, 18:31-38. Because the dependent claims add this claim limitation, it cannot be imported into the independent claims. *Phillips*, 415 F.3d at 1315.

UPPAbaby's reliance on the prosecution history again does not provide it with support for its proposed construction. During prosecution of the '901 Application, the examiner identified elements 411 and 421 of Cheng as the upper tube support frames. Ex. K at BJvU-0002232. Baby Jogger explained that these components could not be the upper tube support frames because they were not coupled to the "stroller handle" as was required by pending claims 14 and 18. Ex. K at BJvU-0002224-25, BJvU-0002232. Baby Jogger further stated that element 10 of Cheng must be the first and second upper tube support frames because that appeared to be where the stroller handle was coupled to the frame. *Id*. At no point in the prosecution history, however, does Baby Jogger limit the claim term "handle portion" to be restricted to a lateral frame portion. There is no discussion regarding a lateral frame portion in the prosecution history, let alone a clear and unmistakable restriction of claim scope. *Cordis*, 561 F.3d at 1329

UPPAbaby's arguments lack merit, no construction is necessary, and the plain and ordinary meaning of "handle portion" should be adopted.

D. "Adjacent"

Baby Jogger's Proposed Construction	UPPAbaby's Proposed Construction
Does not require construction. Alternatively, plain and ordinary meaning, which is "next to" or "nearby"	Next to and having contact with.

The claim term "adjacent" is an unambiguous term used to describe the relative location of claimed features of the invention. For example, as shown in at least Figures 9A-9F of the '869 Patent, the connector portions connect to the stroller frame adjacent (or next to) the front wheels of the stroller. ECF 57-2, '869 Patent, 10:23-27, 10:30-34. Nothing in the intrinsic record requires these components to be both next to **and** having contact with each other. While "adjacent" encompasses components that are "next to," "nearby," **or** in contact with each other, it does not require that the components be in contact. UPPAbaby's proposed construction should be rejected.

During his deposition, UPPAbaby's expert agreed that although the claims disclose connector portions *adjacent to* the front wheels, the figures did not show the connector portions *in contact with* the front wheels. Ex. I, Clark Tr. at 99:19-25. UPPAbaby's proposed construction is nonsensical, as the connector portions cannot be next to **and** having contact with the front wheels, as this would render the stroller inoperable. The same is true of claim 1 of the '231 Patent and '729 Patent, which provide "a stroller seat support portion positioned at a first vertical position adjacent the handle portion" and "the rear wheel support portion is disposed adjacent to both the front wheel support portion and the handle portion when the frame is in the folded configuration."[7] It would be illogical for the stroller seat support portion to be next to **and** having contact with the handle portion. Applying UPPAbaby's proposed construction for the "handle portion" would mean that a stroller seat would be attached to the crossbar (or the lateral frame portion, as phrased by UPPAbaby). The specification contains no requirement that the stroller seat be in contact with the handle portion, and the figures of the '231 Patent and '729 Patent expressly illustrate embodiments

[7] ECF 57-5, '231 Patent, 17:21-23, 17:39-42; ECF 57-6, '729 Patent, 17:19-21, 17:37-40.

MOCKINGBIRD ET AL. EX1081
MOCKINGBIRD ET AL. V. BABY JOGGER
IPR2025-01095

(*see, e.g.*, Figs. 8A-8H) where the stroller seat is **not** in contact with the handle portion. *Oatey Co. v. IPS Corp.*, 514 F.3d 1271, 1277 (Fed. Cir. 2008) ("where claims can reasonably [be] interpreted to include a specific embodiment, it is incorrect to construe the claims to exclude that embodiment…"). Nothing in the intrinsic record requires the rear wheel support portion, the front wheel support portion, and the handle portion to be in contact with each other when in the folded position. Figure 8B of the '231 Patent and '729 Patent illustrates the stroller in a folded configuration, showing these components positioned next to each other but without physical contact.

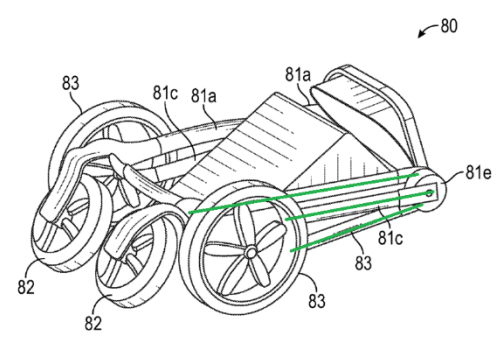

FIG. 8B

The Federal Circuit has previously rejected an argument that the term "adjacent" required components to be "contiguous or connected." *MBO Labs.*, 474 F.3d at 1333. In holding the proper construction was "next to," the court pointed to embodiments of the invention in which the relevant components were not "contiguous or connected." *Id*. The court reasoned that "a claim interpretation that excludes a preferred embodiment from the scope of the claim is rarely, if ever, correct." *Id*. (quoting *On–Line Techs., Inc. v. Bodenseewerk Perkin–Elmer GmbH,* 386 F.3d 1133, 1138 (Fed. Cir. 2004)). Adopting UPPAbaby's proposed construction would improperly exclude embodiments disclosed in the specification. *In re Katz Interactive Call Processing Patent Litig.*, 639 F.3d 1303, 1324 (Fed. Cir. 2011) ("there is a strong presumption against a claim construction that excludes a disclosed embodiment"); *Oatey*, 514 F.3d at 1277.

UPPAbaby attempts to support its proposed construction by relying on a single use of the phrase "substantially adjacent" in the specification of the '231 Patent. *See* ECF 58 at 21-24.

> In certain example embodiments, the removable seat attachment adapter 84 is capable of supporting a second stroller seat 85 such that a child in the second stroller seat 85 is substantially above the frame 81 of the stroller 80 that is substantially adjacent to the connection point of the second stroller seat 85.

ECF 57-5, '231 Patent, 10:60-65 (Notably, the specification of the '869 Patent does not use the phrase "substantially adjacent."). Despite the lack of support for this position in the intrinsic record, UPPAbaby concludes that this use confirms that "adjacent" must mean the components are in contact with one another. ECF 58 at 22. But this argument misconstrues the specification's use of the phrase "substantially adjacent." UPPAbaby incorrectly concludes that the discussion of the second stroller seat being "substantially above" the frame is shown in Figure 8A of the '231 Patent. *Id*. Nothing in the specification indicates that Figure 8A illustrates the referenced language. This is confirmed by the disclosure of identical Figure 8 from the '869 Patent, in which the specification contains no discussion of an embodiment in which any component is "substantially adjacent." *Compare* ECF 57-5, '231 Patent, Fig. 8A, *with* ECF 57-2, '869 Patent, Fig. 8.

This language also does not support UPPAbaby's narrow interpretation of the claim term "adjacent." The specification is describing an example embodiment where the child in the second stroller seat is "substantially above" the frame, and the frame is "substantially adjacent to the connection point of the second stroller seat." ECF 57-5, '231 Patent, 10:60-65. Because the second stroller seat is ***substantially*** above the frame, it makes sense in this embodiment that the frame would be ***substantially*** adjacent to the connection point of the second stroller, rather than being adjacent. The distinction between adjacent and substantially adjacent is simply a matter of degree of proximity. Substantially adjacent includes more flexibility in the relative location of components than using the term adjacent. Nothing in the intrinsic evidence supports UPPAbaby's conclusion that this single use of "substantially adjacent" in the specification of the '231 Patent narrows the plain and ordinary meaning of adjacent.

UPPAbaby's reliance on the prosecution history of the '375 Application is also misplaced.

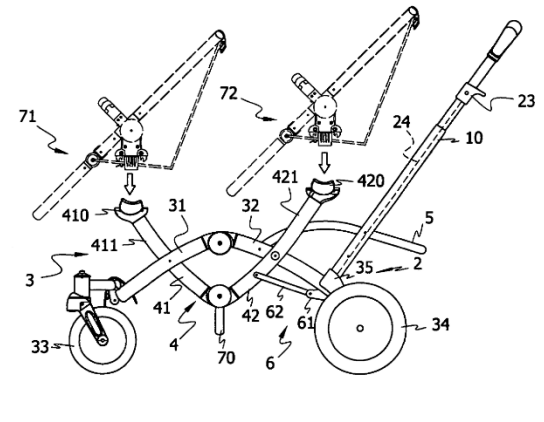

FIG. 5

During prosecution of the '375 Application, Baby Jogger distinguished the Cheng reference for having seat attachment members that were neither reversible nor removable. Ex. J at BJvU-0001169. As shown in Figure 5 of Cheng, the stroller is always a double stroller, as the seat support elements 410/420 are permanent components. Baby Jogger also noted that the seat support elements were not connected to the frame 31, but instead are connected to separate components, referred to as extension arms 411/421. *Id*. Thus, they are not connected to the frame *adjacent* to the front wheels 33. UPPAbaby and its expert interpret this as Baby Jogger taking the position that indirect connections cannot be adjacent. ECF 58 at 25; ECF 58-10, ¶ 115. However, Baby Jogger did not take such a position in the prosecution history. *Cordis*, 561 F.3d at 1329. Further, at his deposition, UPPAbaby's expert was unable to provide support for this theory. Ex. I, Clark Tr. at 113:11-117:3.

UPPAbaby's reliance on the prosecution history for the U.S. Patent Application No. 15/225,326 ("'326 Application")[8] is also misplaced. ECF 58 at 25. In its brief, UPPAbaby appears to argue that Baby Jogger admitted that "adjacent" meant both "next to" and "in contact with" one another. *Id*. But the portion of the prosecution history relied on by UPPAbaby contains only quotations from the referenced prior art. Ex. L at BJvU-0006635.[9] And at no point did Baby Jogger

[8] The '326 Application issued as U.S. Patent No. 9,944,305, which is not asserted in this case.
[9] UPPAbaby's opening brief references bates number BJvU-0006635 (ECF 58 at 25), but the exhibit submitted in support by UPPAbaby contains bates number BJvU-0006335 (ECF 58-5), which is the incorrect document. Baby Jogger has included the correct exhibit as part of its response.

take the position that "adjacent" means both next to **and** in contact with one another.

UPPAbaby's proposed construction of "adjacent" is unduly narrow and contrary to the term's plain and ordinary meaning. While two components in contact would be considered adjacent, it does not follow that two components ***must*** be in contact with each other to be adjacent. In other words, consistent with Baby Jogger's proposed alternative construction, adjacent can mean next to **or** having contact with, as opposed to next to **and** having contact with.

E. "Closer to"

Baby Jogger's Proposed Construction	UPPAbaby's Proposed Construction
Not indefinite. The relevant term is "closer to" which does not require construction. Alternatively, plain and ordinary meaning, which is "being nearer in space"	The term "closer" as used in the claims is indefinite.

Claims 1 and 7 of the '550 Patent describe the locations of claimed features of the stroller relative to other claimed features. The claim language describes the positioning of the first seat as closer to the handle portion and the second seat attachment as closer to the front wheels. ECF 57-3, '550 Patent, 10:24-29. Read together, the claim language is clear that the first seat is closer to the handle than it is to the front wheels, while the second seat attachment is closer to the front wheels than it is to the handle. Based on the claim language alone, a POSITA would understand the scope of the claims with reasonable certainty. This understanding is confirmed by the figures, which illustrate the positioning of the stroller seats. *See, e.g.*, ECF 57-3, '550 Patent, Figs. 8, 9A-9F; *see also* ECF 57-5, '231 Patent, 11:6-8 ("In certain example embodiments, the first stroller seat 86 can be located generally closer to the handle portion 81*d* than to the front wheels 82."). UPPAbaby's expert agreed that this is what the figures illustrate. Ex. I, Clark Tr. at 120:19-124:10.

The claim language also describes the location of the first and second connector portions relative to the left and right front wheels. ECF 57-3, '550 Patent, 10:33-40. When considered in the context of the entire claim, it is evident that the first connector portion is closer to the left front

wheel than it is to the right front wheel, and the second connector portion is closer to the right front wheel than it is to the left front wheel. The scope of this claim language is clear and definite.

As further evidence that this claim language is not indefinite, during prosecution, the examiner amended this language to place the application in condition for allowance. Ex. M at BJvU-0006261-65. To overcome existing prior art, the examiner proposed the amendments below, which Baby Jogger approved:

> first seat coupled to the stroller frame ~~along~~ at a first vertical position of the stroller frame closer to a handle of the stroller and configured to hold a first child in the stroller;
>
> a second seat attachment coupled to the stroller frame ~~along~~ at a second vertical position substantially below the first vertical position and closer to the front wheels. . .
>
> a first connector portion releasably connected to the stroller frame closer to a left front wheel. . .
>
> a second connector portion releasably connected to the stroller frame closer to a right front wheel. . .

Compare Ex. M at BJvU-0006240, *with* BJvU-0006262. While non-precedential, the Federal Circuit's holding in *Tinnus Enterprises, LLC v. Telebrands Corp.*, is instructive. In that case, the examiner added language to overcome prior art, placing the application in condition for allowance. *Tinnus,* 733 F. App'x 1011, 1020 (Fed. Cir. 2018). The Federal Circuit concluded that "[t]he examiner's own remarks confirm that the claim language informs a person of ordinary skill of the objective boundaries of the claim term." *Id.* The Federal Circuit further reasoned that there is a presumption that "an examiner would not introduce an indefinite term into a claim when he/she chooses to amend the claim for the very purpose of putting the application in a condition for allowance." *Id*. (citing *Northern Telecom, Inc. v. Datapoint Corp.*, 908 F.2d 931, 939 (Fed. Cir. 1990)). UPPAbaby fails to present any argument to overcome this presumption.

As the Federal Circuit has repeatedly confirmed, "relative terms…do not render patent

claims so unclear as to prevent a person of skill in the art from ascertaining the scope of the claim." *Deere & Co. v. Bush Hog, LLC*, 703 F.3d 1349, 1359 (Fed. Cir. 2012). The requirement of 35 U.S.C. § 112 ¶ 2, "is not a demand for unreasonable precision. The requirement, applied to the real world of modern technology, does not contemplate in every case a verbal precision of the kind found in mathematics." *In re Packard*, 751 F.3d 1307, 1313 (Fed. Cir. 2014). Further, UPPAbaby has the burden of proving indefiniteness by clear and convincing evidence. *BASF Corp. v. Johnson Matthey Inc.*, 875 F.3d 1360, 1365 (Fed. Cir. 2017). UPPAbaby cannot satisfy this strict burden.

UPPAbaby's feigned confusion concerning the scope of these claims is undercut by the intrinsic evidence. UPPAbaby argues that it is unclear what "closer [to]" is being measured relative to. ECF 58 at 26-27. But as discussed above, this argument lacks merit as the claim language and the specification are clear regarding the positioning of the claimed components. Further, the examiner's addition of this language so that the application was allowable demonstrates that this claim is definite. *See PowerOasis, Inc. v. T-Mobile USA, Inc.*, 522 F.3d 1299, 1304 (Fed. Cir. 2008) (PTO examiners are "assumed to have some expertise in interpreting the references and to be familiar from their work with the level of skill in the art and whose duty it is to issue only valid patents.") (quotation omitted). UPPAbaby incorrectly argues that the claim language is indefinite because, in its view, it can be interpreted in several ways. "Just because a term is susceptible to more than one meaning does not render it indefinite." *ClearOne, Inc. v. Shure Acquisition Holdings, Inc.*, 35 F.4th 1345, 1351 (Fed. Cir. 2022). "Such a test would render nearly every claim term indefinite so long as a party could manufacture a plausible construction." *Nevro Corp. v. Bos. Sci. Corp.*, 955 F.3d 35, 41 (Fed. Cir. 2020).

Finally, UPPAbaby incorrectly argues that the figures of the '550 Patent show the second seat attachment at vertical positions above, below, and approximately equal to the first seat. ECF

MOCKINGBIRD ET AL. EX1081
MOCKINGBIRD ET AL. V. BABY JOGGER
IPR2025-01095

58 at 28-29. This introduces an argument distinct from the dispute regarding the claim term "closer to," and misrepresents the claim language. The claim language provides "a second seat attachment ***coupled to the stroller frame at a second vertical position substantially below the first vertical position***…" ECF 57-3, '550 Patent, 10:27-29. Thus, the second vertical position is where the second seat attachment is coupled to the stroller frame. Each relevant embodiment disclosed in the figures illustrates the second vertical position substantially below the first vertical position. ECF 57-3, '550 Patent, Figs. 3, 5, 8, 9A-9F. This additional claim language provides even more context regarding the relative locations of the claimed components.

Because the intrinsic evidence here permits a POSITA to understand the scope of the claim language with reasonable certainty, these claims are definite.

F. "Substantially parallel"

Baby Jogger's Proposed Construction	UPPAbaby's Proposed Construction
Not indefinite. Does not require construction. Alternatively, plain and ordinary meaning, which is "the parallel relationship is not a strict relationship"	The term "substantially parallel" as used in the claims is indefinite.

Claim 1 of the '568 and '231 Patents uses the phrase "substantially parallel" to describe the relative alignment between components of the stroller. For claim 1 of the '568 Patent, that alignment is between the front wheel support frame and upper tube support frame when the stroller frame is unfolded. ECF 57-4, '568 Patent, 17:26-34. For claim 1 of the '231 Patent, that alignment is between the front wheel support portion and the handle portion when the stroller frame is unfolded. ECF 57-5, '231 Patent, 17:23-25. This claim language is not indefinite, as a POSITA would readily understand that the substantially parallel alignment of these components permits some deviation from strictly parallel. This is particularly true here, where the specification expressly defines the term "substantially parallel." ECF 57-4, '568 Patent, 3:67-4:3; ECF 54-5, '231 Patent, 3:52-55.

Federal Circuit case law is clear that mathematical precision or strict numerical boundaries are not required for a POSITA to ascertain the scope of a claim. *See, e.g.*, *Deere*, 703 F.3d at 1359; *Ecolab, Inc. v. Envirochem, Inc.*, 264 F.3d 1358, 1367 (Fed. Cir. 2001) ("[T]he term 'substantially' is a descriptive term commonly used in patent claims to 'avoid a strict numerical boundary to the specified parameter.'"). But that is precisely the position UPPAbaby takes, arguing there must be a numerical value that can be measured to determine what is substantially parallel. ECF 58 at 30.

1. The claim language of the '568 Patent is definite, as the scope of this claim is readily apparent to a POSITA

For claim 1 of the '568 Patent, UPPAbaby references Figure 8A and argues that the alignment of the front wheel support frame and upper tube support frame is neither parallel nor substantially parallel because these components are "*in line* with one another." ECF 58 at 31 (emphasis in original). This argument lacks merit as a POSITA would understand that two components oriented in the same direction, or approximately the same direction, would be considered parallel or substantially parallel to each other. This is particularly true here, when the claims are read in view of the specification, including the figures which provide clear illustrations of embodiments of the claimed invention. This claim language is definite as Figure 8A clearly shows an example of the alignment of the front wheel support frame and upper tube support frame when the frame is unfolded. UPPAbaby's expert conceded that these components were aligned in the same direction and had the same slope. Ex. I, Clark Tr. at 132:14-133:8. He further agreed that Figure 8A of the '568 Patent demonstrated to a POSITA how these components were aligned:

> Q. Okay. If we look at Figure 8A and the way that these components are presented, doesn't this demonstrate to a person of ordinary skill how the components could be aligned when the stroller is unfolded?
>
> A. It does.

Ex. I, Clark Tr. at 133:9-14. This reinforces that the claim language is definite.

UPPAbaby also points to Figure 9 of the ’568 Patent, which illustrates an embodiment in which the front wheel support frame and upper tube support frame are not strictly parallel but instead have a slight curvature when the stroller frame is unfolded. In other words, these components are substantially parallel to each other. Contrary to UPPAbaby’s position and as the Federal Circuit has explained, it is not necessary for the intrinsic record to provide a precise numerical value to measure what constitutes substantially parallel. *Deere*, 703 F.3d at 1359.

UPPAbaby points to the prosecution history for the ’568 Patent, noting that the terms “substantially parallel” and “when the stroller frame is unfolded from a folded configuration” were added to clarify the scope of the claimed invention and to distinguish it from cited prior art. ECF 58 at 32; Ex. N at BJvU-0003082-90, BJvU-0003205-15. But this provides further context for the scope of the claims, as Baby Jogger (and the examiner who allowed these claims) distinguished its invention from those having folded or curved frames, as illustrated below:

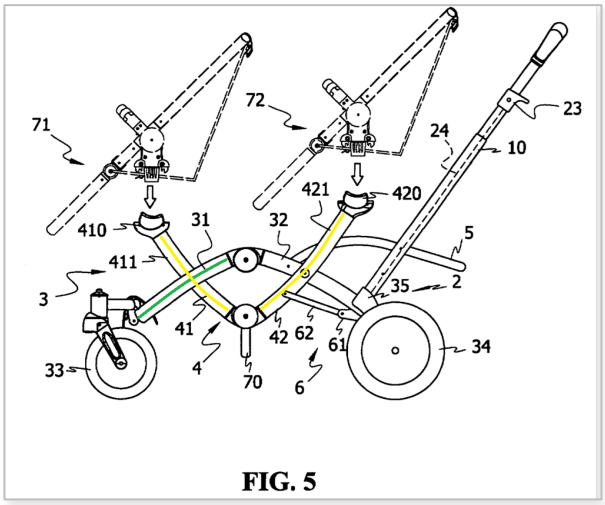

ECF 58-4, Cheng at Fig. 5

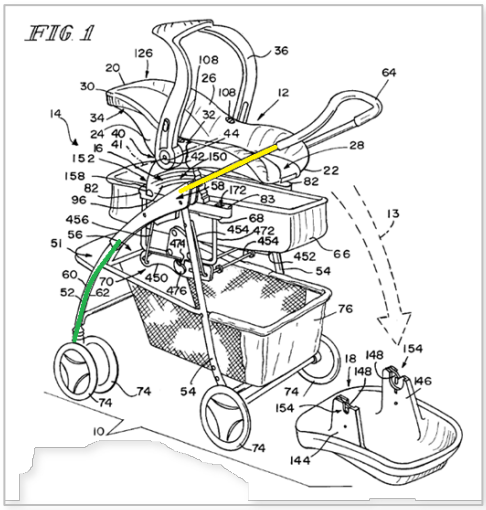

ECF 58-6, Cone at Fig. 1

Neither reference has a front wheel support frame that is substantially parallel to the upper tube support frame. For each of these reasons, the claim language here is definite.

2. The claim language of the '231 Patent is definite, as the scope of this claim is readily apparent to a POSITA

UPPAbaby's indefiniteness argument for claim 1 of the '231 Patent fails for many of the same reasons discussed above. UPPAbaby again seeks to require the claims to have mathematical precision that is not required under Federal Circuit law. *Deere*, 703 F.3d at 1359. Here, the front wheel support portion and the handle portion must be substantially parallel when the frame is in the unfolded configuration. As discussed above (*supra* Part II.C), the handle portion is a part of the stroller frame that connects to the upper tube support frame. *See, e.g.*, ECF 57-5, '231 Patent, 9:1-4, 17:14, Fig. 8A (labeled 81d). This claim language is definite, as Figure 8A clearly shows the alignment of the front wheel support frame and the handle portion when the frame is unfolded. UPPAbaby argues that these components are perpendicular to each other, relying on its erroneous proposed construction for the claim term "handle portion." Further, that Baby Jogger would include claim language aligning these components in a substantially parallel relationship when the frame is unfolded, is further evidence that UPPAbaby's proposed construction for "handle portion" should be rejected. Applying UPPAbaby's construction, this claim language would not make sense. Baby Jogger does not dispute that components that are perpendicular to each other are not parallel or substantially parallel. But that is not the situation here. UPPAbaby has failed to demonstrate by clear and convincing evidence that this claim language is indefinite.

III. CONCLUSION

For the foregoing reasons, and those in its Opening Claim Construction Brief (ECF 57), Baby Jogger respectfully requests that the Court find that the disputed claim terms be given their plain and ordinary meaning and, where necessary, are not indefinite.

MOCKINGBIRD ET AL. EX1081
MOCKINGBIRD ET AL. V. BABY JOGGER
IPR2025-01095

Respectfully submitted,

Dated: May 9, 2025

/s/ *Robert J. Leonard*
Wendy K. Venoit (BBO No. 568657)
Michael M. Filbin (BBO No. 705341)
COZEN O'CONNOR
200 State Street, Suite 1105
Boston, MA 02109
Telephone: (617) 849-5002
wvenoit@cozen.com
mfilbin@cozen.com

John W. Harbin (Admitted *pro hac vice*)
Georgia State Bar No. 324130
Gregory J. Carlin (Admitted *pro hac vice*)
Georgia State Bar No. 455865
Walter Hill Levie III (Admitted *pro hac vice*)
Georgia State Bar No. 415569
Robert J. Leonard (Admitted *pro hac vice*)
Georgia State Bar No. 303694
MEUNIER CARLIN & CURFMAN LLC
999 Peachtree Street N.E., Suite 1300
Atlanta, Georgia 30309
Telephone: (404) 645-7700
Facsimile: (404) 645-7707
jharbin@mcciplaw.com
gcarlin@mcciplaw.com
tlevie@mcciplaw.com
rleonard@mcciplaw.com

Attorneys for Plaintiff Baby Jogger, LLC

CERTIFICATE OF SERVICE

I certify that on May 9, 2025, I electronically filed the foregoing with the Clerk of the Court using the CM/ECF system, which automatically sends email notification of such filing to registered participants. Any other counsel of record will receive the foregoing via e-mail in PDF format.

/s/ *Robert J. Leonard*
Robert J. Leonard