IN THE UNITED STATES PATENT AND TRADEMARK OFFICE

In re Patent of:	Elenga et al.	
U.S. Patent No.:	8,860,337	Attorney Docket No. 50095-0178IP1
Issue Date:	October 14, 2014	
Appl. Serial No.:	13/345,607	
Filing Date:	January 6, 2012	
Title:	LINEAR VIBRATION MODULES AND LINEAR-RESONANT VIBRATION MODULES	

Mail Stop Patent Board
Patent Trial and Appeal Board
U.S. Patent and Trademark Office
P.O. Box 1450
Alexandria, VA 22313-1450

PETITION FOR *INTER PARTES* REVIEW OF UNITED STATES PATENT NO. 8,860,337 PURSUANT TO 35 U.S.C. §§ 311–319, 37 C.F.R. § 42

TABLE OF CONTENTS

I. INTRODUCTION 1

II. REQUIREMENTS FOR IPR 1
- **A.** Grounds for Standing 1
- **B.** Challenge and Relief Requested 1
- **C.** Claim Construction 2
  - 1. Means-Plus-Function Terms 2

III. '337 PATENT 6
- **A.** Brief Description 6
- **B.** Prosecution History 6

IV. APPLICATION OF PRIOR ART 7
- **A.** GROUND 1: Wakuda-Ramsay Renders Obvious Claims 1-4 (Plain-and-Ordinary Meaning and Patent Owner's Means-Plus-Function Construction) 7
  - 1. Wakuda 7
  - 2. Ramsay 9
  - 3. Wakuda-Ramsay Combination 10
  - 4. Analysis 13
- **B.** GROUND 2: Wakuda-Ramsay-Rossi-Aldrich Renders Obvious Claims 1-4 (Both Parties' Means-Plus-Function Constructions) 31
  - 1. Rossi 31
  - 2. Aldrich 31
  - 3. Wakuda-Ramsay-Rossi-Aldrich Combination 32
  - 4. Analysis 38
- **C.** GROUND 3A: Gregorio-Ramsay-Wakuda Renders Obvious Claims 1, 2, and 4 (Plain-and-Ordinary Meaning and Patent Owner's Means-Plus-Function Construction) 50
  - 1. Gregorio 50
  - 2. Gregorio-Ramsay-Wakuda Combination 53
  - 3. Analysis 57
- **D.** GROUND 3B: Gregorio-Ramsay-Tierling Renders Obvious Claims 2, 3, and 4 (Plain-and-Ordinary Meaning and Patent Owner's Means-Plus-Function Construction) 66
  - 1. Tierling 66
  - 2. Gregorio-Ramsay-Tierling 68
  - 3. Analysis 70

NINTENDO-1027, p. i
Nintendo v. Resonant
IPR2025-01098

E. GROUND 4A: Gregorio-Ramsay-Wakuda-Rossi-Aldrich Renders Obvious Claims 1, 2, and 4 (Both Parties' Means-Plus-Function Constructions) 75
1. Gregorio-Ramsay-Wakuda-Rossi-Aldrich 75
2. Analysis 79
F. GROUND 4B: Gregorio-Ramsay-Tierling-Rossi-Aldrich Renders Obvious Claims 2, 3, and 4 (Both Parties' Means-Plus-Function Constructions) 80

V. DISCRETIONARY CONSIDERATIONS 80

VI. PAYMENT OF FEES 86

VII. CONCLUSION 86

VIII. MANDATORY NOTICES UNDER 37 C.F.R § 42.8(a)(1) 86
A. Real Party-In-Interest Under 37 C.F.R. § 42.8(b)(1) 86
B. Related Matters Under 37 C.F.R. § 42.8(b)(2) 86
C. Lead And Back-Up Counsel Under 37 C.F.R. § 42.8(b)(3) 87
D. Service Information 87

NINTENDO-1027, p. ii
Nintendo v. Resonant
IPR2025-01098

LIST OF EXHIBITS

APPLE-1001	U.S. Patent No. 8,860,337
APPLE-1002	U.S. Patent No. 8,860,337 File History
APPLE-1003	Declaration of Blake Hannaford
APPLE-1004	U.S. Patent No. 7,843,277 to Pedro Gregorio, et al. ("Gregorio")
APPLE-1005	U.S. Patent No. 7,005,811 to Hiroshi Wakuda, et al. ("Wakuda")
APPLE-1006	U.S. Patent Application Publication. No. 2008/0294984 to Erin B. Ramsay, et al. ("Ramsay")
APPLE-1007	U.S. Patent Application Publication No. 2006/0109256 to Danny A. Grant, et al. ("Grant")
APPLE-1008	U.S. Patent Application Publication No. 2005/0134561 to Kollin M. Tierling, et al. ("Tierling")
APPLE-1009	U.S. Patent Publication No. 2008/0246532 ("Cosper")
APPLE-1010	U.S. Patent Application Publication No. 2008/0198139 to Robert Andre Lacroix, et al. ("Lacroix")
APPLE-1011	U.S. Patent Application Publication No. 2005/0134562 to Danny Grant, et al.
APPLE-1012	C. McLyman, *Transformer and Inductor Design Handbook*, Marcel Dekker, Third Edition, Revised and Expanded, 2004
APPLE-1013	U.S. Patent No. 6,088,017 to Mark R. Tremblay, et al.
APPLE-1014	U.S. Patent No. 8,686,952 to Bobby Burrough, et al.

APPLE-1015	U.S. Patent No. 8,207,832 to Jue Byung Yun, et al.
APPLE-1016	U.S. Patent No. 8,203,640 to Jong Hwan Kim, et al.
APPLE-1017	U.S. Patent Application Publication No. 2007/0285216 to Kollin M. Tierling, et al.
APPLE-1018	Thorsten A. Kern, *Engineering Haptic Devices: A Beginner's Guide for Engineers*, Springer, 2009
APPLE-1019	U.S. Patent No. 6,982,696 to Erik J. Shahoian
APPLE-1020	U.S. Patent No. 4,879,641 to Domenico Rossi, et al. ("Rossi")
APPLE-1021	Jack Aldrich, et al, *Controller for Driving a Piezoelectric Actuator at Resonance*, NASA Tech Briefs, April 2008 ("Aldrich")
APPLE-1022	Declaration of June Munford re Aldrich
APPLE-1023	U.S. Patent No. 7,027,032 to Louis B. Rosenberg, et al. ("Rosenberg")
APPLE-1024	U.S. Patent No. 5,736,797 to Ryo Motohashi, et al. ("Motohashi")
APPLE-1025	U.S. Patent No. 5,955,799 to Hidetoshi Amaya, et al. ("Amaya")
APPLE-1026	J. Peckol, *Embedded Systems, A contemporary Design Tool*, 2008 ("Peckol")
APPLE-1027	Corrosion - two case studies: aluminium and iron, Primary Connections: Linking science with literacy, available at https://www.primaryconnections.org.au/themes/custom/connections/assets/SBR/data/Chem/sub/corrosion/corrosion.htm#:~:text=When%20it%20starts%20to%20corrode,keep%20attacking%20the%20underlying%20iron (retrieved 2/12/2024)

APPLE-1028	How to Protect Aluminum From Corrosion, OneMonroe, available at https://monroeengineering.com/blog/how-to-protect-aluminum-from-corrosion/ (retrieved 2/12/2024)
APPLE-1029	Electrical Conductivity of Materials, Blue Sea Systems, https://www.bluesea.com/resources/108/Electrical_Conductivity_of_Materials (retrieved 2/12/2024)
APPLE-1030	Thermal Conductivity, available at hyperphysics.phy-astr.gsu.edu/hbase/Tables/thrcn.html (retrieved 2/12/2024)
APPLE-1031	U.S. Patent No. 8,134,437 to Elliot Brooks
APPLE-1032	Magnetic Materials, Phys 251; archived at Wayback Machine; citing a capture dated March 23, 2002 (https://web.archive.org/web/20020323183824/http://webphysics.iupui.edu/webscience/physics_archive/magneticmaterials.html)
APPLE-1033	Resonant Systems Proposed Claim Constructions, 7-23-cv-00077 (WDTX) (Feb. 15, 2024)
APPLE-1034	Apple, Inc. Proposed Claim Constructions, 7-23-cv-00077 (WDTX) (Feb. 15, 2024)
APPLE-1035	Types of Magnetism, DolTPoMS, Department of Materials Science and Metallurgy, University of Cambridge; archived at Wayback Machine; citing a capture dated October 9, 2006 (https://web.archive.org/web/20061015000000*/https://www.doitpoms.ac.uk/tlplib/ferromagnetic/types.php)
APPLE-1036	Motion to Transfer Venue, 7-23-cv-00077 (WDTX)
APPLE-1037	Moskowitz, B.M. (1991). Hitchhiker's Guide to Magnetism. In Environmental Magnetism Workshop, pp. 1–38. Minneapolis: The Institute for Rock Magnetism and the Global Paleorecords Research Training Group

APPLE-1038	Resistance and Ohm's Law; archived at Wayback Machine; citing a capture dated February 18, 1999 (https://web.archive.org/web/19990218085938/https://physics.bu.edu/~duffy/PY106/Resistance.html)
APPLE-1039	[RESERVED]
APPLE-1040	U.S. Patent Publication No. 2011/0133682 ("Egger")
APPLE-1041	U.S. Patent Publication No. 2008/0001484 ("Fuller")
APPLE-1042	U.S. Patent Publication No. 2006/0145547 ("Kraus")
APPLE-1043	U.S. Patent Publication No. 2005/0275294 ("Izumi")
APPLE-1044	[RESERVED]
APPLE-1045	[RESERVED]
APPLE-1046	Apple, Inc. Opening Claim Construction Brief, 7-23-cv-00077 (WDTX) (March 21, 2024)
APPLE-1047	Resonant Systems, Inc's Responsive Claim Construction Brief, 7-23-cv-00077 (WDTX) (April 11, 2024)

LISTING OF CLAIMS

Claim 1	
[1pre]	A linear vibration module comprising:
[1a]	a housing;
[1b]	a moveable component;
[1c]	a power supply;
[1d]	user-input features;
[1e]	a driving component that drives the moveable component in each of two opposite directions within the housing;
[1f]	a control component that controls supply of power from the power supply to the driving component to cause the moveable component to oscillate at a frequency and an amplitude specified by user input received from the user-input features; and
[1g]	flux paths comprising a paramagnetic material that is shaped and positioned to reduce the reluctance of one or more magnetic circuits within the linear vibration module.
Claim 2	
[2pre]	A linear vibration module comprising:
[2a]	a housing;
[2b]	a moveable component;
[2c]	a power supply;
[2d]	user-input features;
[2e]	a driving component that drives the moveable component in each of two opposite directions within the housing; and
[2f]	a control component that controls supply of power from the power supply to the driving component to cause the moveable component to

	oscillate at a frequency and an amplitude specified by user input received from the user-input features,
[2g]	wherein the control component drives simultaneous oscillation of the moveable component at two or more frequencies to generate complex vibration modes.
Claim 3	
[3]	The linear vibration module of claim 2 wherein the complex vibration modes include: a primary oscillation frequency modulated by a modulating oscillation frequency; a beat frequency; and an aperiodic oscillation waveform.
Claim 4	
[4pre]	A linear vibration module comprising:
[4a]	a housing;
[4b]	a moveable component;
[4c]	a power supply;
[4d]	user-input features;
[4e]	a driving component that drives the moveable component in each of two opposite directions within the housing; and
[4f]	a control component that controls supply of power from the power supply to the driving component to cause the moveable component to oscillate at a frequency and an amplitude that are independently specified by user input received from the user-input features.

I. INTRODUCTION

Apple Inc. ("Apple" or "Petitioner") petitions for IPR of claims 1-4 ("Challenged Claims") of U.S. Patent No. 8,860,337 ("the '337 patent").

II. REQUIREMENTS FOR IPR

A. Grounds for Standing

Apple certifies that the '337 patent is available for IPR and that Petitioner is not barred or estopped from requesting this review challenging the Challenged Claims on the below-identified grounds.

B. Challenge and Relief Requested

The Challenged Claims are invalid based on the grounds below. Dr. Blake Hannaford provides supporting testimony in his Declaration (APPLE-1003).

Ground	Claims	§103
1	1-4	Wakuda, Ramsay
2	1-4	Wakuda, Ramsay, Rossi, Aldrich
3A	1, 2, 4	Gregorio, Ramsay, Wakuda
3B	2, 3, 4	Gregorio, Ramsay, Tierling
4A	1, 2, 4	Gregorio, Ramsay, Wakuda, Rossi, Aldrich
4B	2, 3, 4	Gregorio, Ramsay, Tierling, Rossi, Aldrich

Each applied reference pre-dates U.S. provisional application 61/179,109, filed on May 18, 2009 ("Critical Date"), which is the earliest filed application from which the '337 patent claims priority. Petitioner does not concede that the Critical

Date is May 18, 2009, but has applied references that pre-date the Critical Date and qualify as prior art as shown below.

Reference	Date	Pre-AIA Section
Gregorio	12/16/2008 (filed), 11/30/2010 (published)	§102(e)
Wakuda	2/28/2006	§102(b)
Tierling	6/23/2005	§102(b)
Ramsay	11/27/2008	§102(a)
Rossi	11/7/1989	§102(b)
Aldrich	4/2008 (APPLE-1022)	§102(b)

C. Claim Construction

All claim terms should be construed according to the *Phillips* standard. The Board has repeatedly explained that "claim terms need only be construed to the extent necessary to resolve the controversy." *Wellman, Inc. v. Eastman Chem. Co.*, 642 F.3d 1355, 1361 (Fed. Cir. 2011). As the prior art discloses the claims under each of the constructions offered in the Petition, the Board need not construe the claims to resolve unpatentability. *Id.*

1. Means-Plus-Function Terms

Certain claims recite "driving component" and "control component" as discussed below. These terms do not recite "means for" and thus a presumption exists that these terms are not subject to 35 U.S.C. §112(¶6). Although Patent Owner currently agrees in co-pending litigation that the terms "control component"

and "driving component" should be interpreted according to the means-plus-function construction, Patent Owner initially asserted that these terms are under the plain-and-ordinary meaning interpretation. APPLE-1046, 5, 8; APPLE-1033, 1-2, 4. In view of Patent Owner's inconsistent positions, this Petition demonstrates unpatentability by applying both the plain-and-ordinary meaning and the means-plus-function meaning of these terms. Indeed, the Petition's plain-and-ordinary meaning interpretation (Grounds 1, 3A-3B) and means-plus-function interpretation (Grounds 2, 4A-4B) cover all of Patent Owner's various means-plus-function treatments of the terms.

The corresponding analysis and construction under 35 U.S.C. §112(¶6) for each term is provided below. Regardless of the interpretation adopted, the instant record demonstrates that the implicated terms are plainly satisfied in view of the overlap between the prior art cited herein and the '337 patent specification. *General Electric Co. v Vestas Wind Systems A/S*, IPR2018-00928, Paper 9, 12-16 (PTAB Nov. 5, 2018) ("the rule does not prohibit a petitioner from submitting more than one construction"); *Intel Corp. v Qualcomm Inc.*, IPR2018-01340, Paper 8, 11-13 (PTAB Jan. 15, 2019); APPLE-1003, [21]-[29].

(a) "control component"

As agreed by Patent Owner in co-pending litigation, the term "control component" in claim 2 is a means-plus-function limitation because it uses non-

structural general placeholder ("component") defined by a specified function ("controls supply of power from the power supply to the driving component to cause the moveable component to oscillate at a frequency and an amplitude specified by user input received from the user-input features" and "drives simultaneous oscillation of the moveable component at two or more frequencies to generate complex vibration modes"). This Petition treats "control component" in claim 2 as including one of the switches shown in Figures 5A-6 and described at 5:45-65, 6:2-8 and the processor (also referred to as microprocessor, microcontroller, or CPU) that performs the algorithm shown in Figures 7A-7C and described at 6:43-8:30 and 13:3-41, and equivalents of this structure. 37 CFR §42.104(b)(3); APPLE-1046, 12-13; APPLE-1034, 5; APPLE-1003, [25].

Similarly, claims 1 and 4 recite that the "control component" performs a specified function ("controls supply of power from the power supply to the driving component to cause the moveable component to oscillate at a frequency and an amplitude [that are independently] specified by user input received from the user-input features"). This Petition treats "control component" in claims 1 and 4 as including one of the switches shown in Figures 5A-6 and described at 5:45-65, 6:2-8 and the processor (also referred to as microprocessor, microcontroller, or CPU) that performs the algorithm shown in Figures 7A-7C and described at 6:43-8:30, and equivalents of this structure. APPLE-1034, 5; APPLE-1003, [24].

Grounds 2 and 4A-4B demonstrate unpatentability under the means-plus-function interpretation.

While agreeing on the means-plus-function treatment as to claim 2 in co-pending litigation, Patent Owner identifies an alternative means-plus-function construction that only includes some unspecified part of the disclosed algorithm of the '337 patent. APPLE-1046, 12-13; APPLE-1047, 14-19. Regardless, as discussed below, the claims are also unpatentable under Patent Owner's various means-plus-function positions as to the "control component." *Infra*, Grounds 1 ([2f]-[2g]), 2 ([2f]-[2g]), 3A ([2f]-[2g]), 4A ([2f]-[2g]); APPLE-1003, [26]-[27].

(b) "driving component"

As agreed by Patent Owner in co-pending litigation, the term "driving component that drives the moveable component to oscillate within the housing" is a means-plus-function limitation because it uses a non-structural generic placeholder ("component") defined only by functional limitations ("driv[ing] the moveable component to oscillate within the housing"). The '337 patent describes the following structures that perform the recited function when they receive alternating current: "a coil of conductive wire 420" (Figures 4A-4G); "coil 514" (Figures 5A-5B); "coil 626" (Figure 6); "electromagnet" (Figures 10-11); "additional coils 1202 and 1204" (Figure 12); "coils 1302 and 1304" (Figure 13); "driving coils 1412 and 1414" (Figure 14); "coil 1510" (Figures 15-17); "stator

coils" (Figures 24A-25). APPLE-1001, 5:2-34, 5:54-59, 6:32-35, 9:11-52, 9:64-10:22, 14:5-9. APPLE-1003, [28]-[29]. For the purpose of analyzing the prior art grounds, the Petition treats these structures and their equivalents as the corresponding structure.

Regardless of whether this term is subject to §112(¶6) or plain-and-ordinary meaning, all Grounds set forth why this element was provided in the prior art publications.

III. '337 PATENT

A. Brief Description

The '337 patent provides "vibration modules that can be incorporated into a wide variety of different types of electromechanical devices and systems to produce vibrations of selected amplitudes and frequencies over a wide range of amplitude/frequency space." APPLE-1001, 1:14-19; APPLE-1003, [36]-[45]. "[T]he vibrational forces are produced by a linear oscillation of a weight or component within the LVM [linear vibration module]." *Id.*, 4:17-32.

B. Prosecution History

The Examiner issued one office action with prior art rejections and indication of allowable claims. APPLE-1002, 114-118. In response, Applicant rewrote the allowable claims in independent form without substantive argument, which subsequently led to allowance. *Id.*, 141-146, 153-157; APPLE-1003, [46]-

[56].

IV. APPLICATION OF PRIOR ART

A. GROUND 1: Wakuda-Ramsay Renders Obvious Claims 1-4 (Plain-and-Ordinary Meaning and Patent Owner's Means-Plus-Function Construction)

1. Wakuda

Wakuda provides "a vibration generator system, which can generate vibrations at a frequency that can be bodily sensed by humans, while being small in size, and which makes setting of a configuration of vibrations easy." APPLE-1005, 2:13-17; APPLE-1003, [64]-[66]. Wakuda's "vibration generator means 1" includes "cylindrical-shaped casing 2," "covers 3," "coil 5," "movable body 6" including weight 7 and magnet M, and "energizing members 9" (e.g., "cone coil springs"). *Id.*, 4:30-5:24.

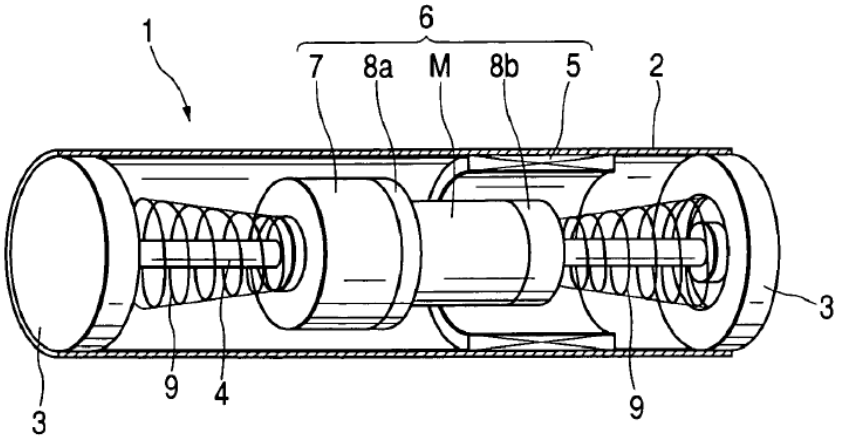

APPLE-1005, Figure 1A

Wakuda generates "drive signal S1" for driving the movable body, which includes "an accumulation signal S1a" that "excites resonant vibrations at the

natural frequency in the movable body 6," and "a damping signal S1b" thereafter. APPLE-1005, 7:9-17, 8:40-48, Figure 4. Referring to Figure 5, "where the accumulation signal S1a and the damping signal S1b are made consecutive and signals composed of a set of the accumulation signal S1a and the damping signal S1b are given at a cycle Te," "the movable body 6 vibrates at the natural frequency (resonance frequency), its amplitude increasing with time for the accumulation signal S1a, and damping with time for the damping signal S1b." *Id.*, 9:12-15. "[A] line connecting peaks of amplitude of the movable body 6 together is shown as an envelope E, the envelope E increasing or decreasing according to the cycle Te of the accumulation signal S1a and the damping signal S1b, and a frequency fe of the envelope E corresponding to 1/Te." *Id.*, 9:15-20. As such, "[a] frequency of the envelope is in a lower band than a natural frequency. The envelope is varied whereby changes in intensity of vibrations are given to humans. Since changes in intensity of vibrations are easy to be bodily sensed as changes in feeling of pressure and the frequency of the envelope is in a frequency band, which can be bodily sensed effectively, humans can surely detect vibrations." *Id.*, 2:29-40.

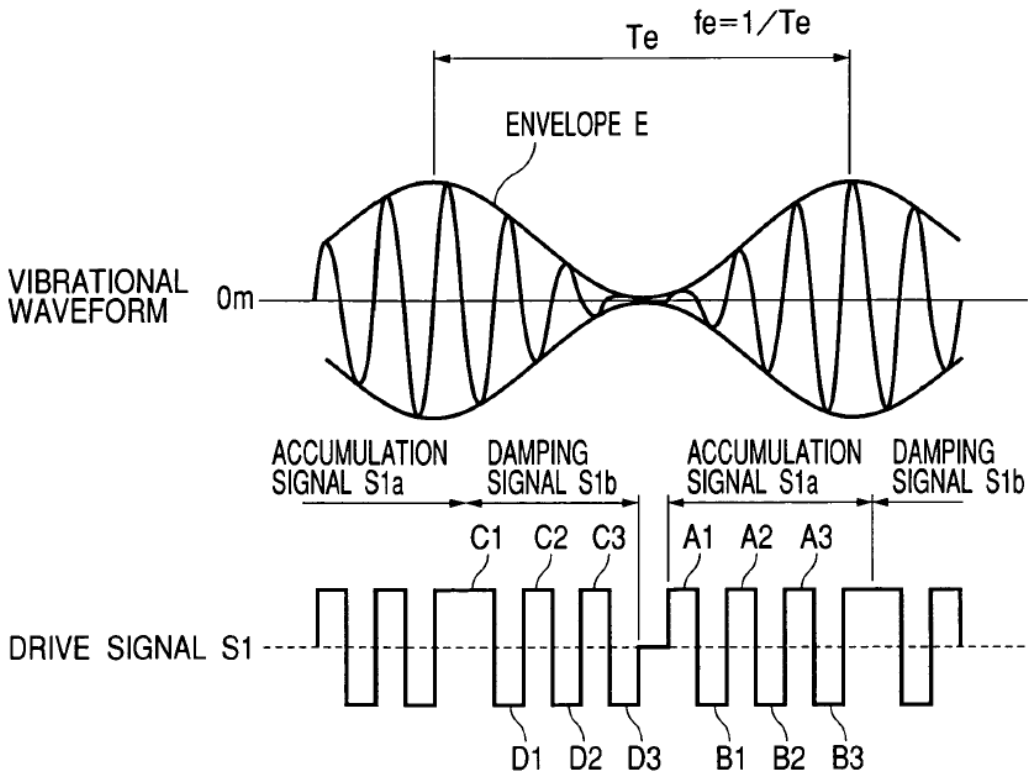

APPLE-1005, Figure 5

2. Ramsay

Ramsay provides techniques for "enabling a regular user of an end user device, such as a cellular telephone, to customize parameters associated with haptic effects applied to the user by the end user device." APPLE-1006, Abstract; APPLE-1003, [67]-[70]. "[T]he user may access programmable haptic design software 30 via GUI 24" to modify "parameters or characteristics of a haptic output" that "include a frequency of vibration and amplitude of vibration. *Id.*, [0030]-[0035], [0046], [0053], Figure 4. Ramsay also can "enable[] the user to enter one or more frequencies for the haptic track or even continually changing

frequencies to be played along the length of the haptic track," and "combine or mix different haptic tracks together if desired to provide a fuller haptic experience." *Id.*, [0015], [0030], [0037], [0046]-[0047].

3. Wakuda-Ramsay Combination

In the predictable combination, Wakuda's system is implemented to enable a user to specify parameters (e.g., frequency and amplitude) associated with haptic effects, according to Ramsay. APPLE-1003, [92]-[93]. The resulting system provides Wakuda's "small-sized terminal devices, such as portable telephones, PDA, portable game equipment[]," that are implemented to store the user-specified haptic effects to be selected and used in generating desired haptic feedback. *Id.*; APPLE-1005, 1:11-14. Further, Wakuda-Ramsay's terminal device includes "input/output devices" equipped in Ramsay's "end user device" similar to Wakuda's terminal device. APPLE-1003, [93]; APPLE-1006, [0019], [0022]-[0024]. Ramsay modifies Wakuda's system to embed "[s]oftware and systems" "according to the teachings [of Ramsay], to lead a user through the process of entering and/or modify[ing] parameters and characteristics of haptic tracks." APPLE-1006, [0015]; APPLE-1003, [93]. Particularly, the memory device in Wakuda-Ramsay (e.g., Ramsay's memory) would store "a software program for enabling an end user to create and/or modify haptic effects, the software program of which can be executed by processor,' and would "also store haptic track files

created or modified by the user and [] also store mixed track files, which include multiple haptic tracks combined together." APPLE-1006, [0025]-[0028]; APPLE-1003, [93]. Further, the resulting system would allow users to "access[] programmable haptic design software 30 via GUI 24 and open[] a file to be edited," and to "interact with programmable haptic design software 30 by input and output mechanisms of GUI," as taught by Ramsay. APPLE-1006, [0037]; APPLE-1003, [93].

A person of ordinary skill in the art (POSITA)[1] would have been motivated and found it obvious to modify Wakuda's vibration generator system to be user-configurable as described in Ramsay for several reasons. APPLE-1003, [94]. As discussed in Ramsay, a POSITA would have recognized that the capability of modifying characteristics of haptic feedback was normally limited to professional designers, and that end users "typically [did] not have the option on the device itself to modify characteristics of haptic feedback." APPLE-1006, [0014]; APPLE-1003, [94]. Therefore, a POSITA would have looked for references like Ramsay to expand the functionalities of haptic devices and allow end users to freely create and customize haptic effects. APPLE-1003, [94]; APPLE-1006, [0014]-[0015]. With Ramsay's teachings, a POSITA would have been motivated

[1] APPLE-1003, [30]-[31] (defining a POSITA).

to provide Wakuda's system with Ramsay's user tools to offer flexibility in customizing haptic effects by allowing users to conveniently "create or modify the haptic effect files directly on the device." APPLE-1003, [94]. The resulting system would also benefit from Ramsay's GUI that displays haptic tracks and offers various, easy-to-use mechanisms for adjusting haptic parameters. *Id.*; APPLE-1006, [0053]-[0057].

Further, Wakuda-Ramsay enables the resulting system to "provide a fuller haptic experience" by allowing users to "combine or mix different haptic tracks together if desired" according to Ramsay. APPLE-1006, [0030], [0047]. A POSITA would have recognized that vibrant haptic effects would result from the combination that enables independent controlling of the frequency and amplitude for oscillation. APPLE-1003, [95] (citing APPLE-1018, 224).

A POSITA would have had a reasonable expectation of success in making the proposed modifications because Wakuda and Ramsay describe the same techniques for controlling a linear actuator to produce desired output. APPLE-1003, [96]; APPLE-1005, 3:42-44; APPLE-1006, [0026]. Indeed, a POSITA would have recognized that Wakuda-Ramsay requires only routine knowledge of software implementation techniques, which were well within the POSITA's skill. APPLE-1003, [97]. The proposed modification merely involves implementing Ramsay's software solutions in Wakuda's hardware setup without substantially

changing Wakuda's other structures. *Id.* The combination modifies Wakuda's system only to the extent that it is necessary to implement Ramsay's software tools, and Wakuda's system would otherwise remain unchanged and perform its intended operations. *Id*., [98]. Further, a POSITA would have recognized that Wakuda's and Ramsay's purposes (e.g., providing vibrational feedback) are compatible, and Wakuda-Ramsay would have accomplished those purposes in a similar way that each of Wakuda and Ramsay achieves. *Id.* The intended operations in each of Wakuda and Ramsay would be achievable in parallel to receive the benefits described by each reference. *Id.* Therefore, combining Wakuda and Ramsay was merely the application of known techniques (Ramsay's software solution for user-customization of haptic effects) to a known device (Wakuda's vibration generator system) ready for improvement to yield predictable results (benefits articulated above). *KSR Int'l Co. v. Teleflex Inc.* 550 U.S. 398, 417 (2007).

4. Analysis

[1pre]

Wakuda-Ramsay provides a linear vibration module, such as Wakuda's "bodily sensed vibration generator system mountable on small-sized information terminal devices, such as portable telephones, PDA, portable game equipment." APPLE-1005, 1:11-16, 3:43-45 ("the movable body reciprocates linearly");

APPLE-1003, [99]-[101]. According to Wakuda, the resulting system includes "vibration generator means 1" that includes "casing 2," "covers 3," "coil 5," "movable body 6," and "control means 10." APPLE-1005, 4:30-5:24, 6:11-62. The linear vibration module in the resulting system further includes "input/output devices" as taught by Ramsay. APPLE-1003, [100]; APPLE-1006, [0022]-[0024]; §IV.A.3.

[1a]

Wakuda-Ramsay provides a housing ("casing 2") within the resulting system. APPLE-1003, [102]-[103]; APPLE-1005, 4:34-38.

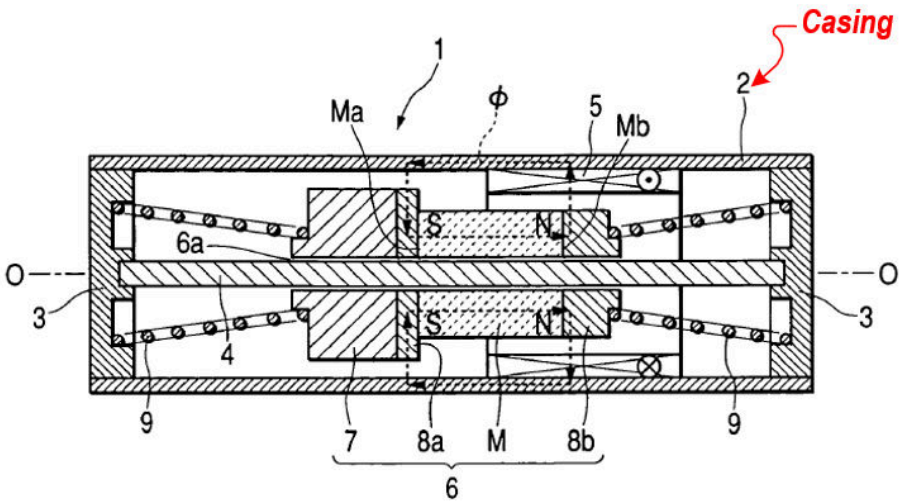

APPLE-1005, Figure 1B[2]

[1b]

Wakuda-Ramsay provides a moveable component ("movable body 6"

[2] All annotations in the figures herein are added unless otherwise indicated.

including "weight 7" and "magnet M"). APPLE-1003, [104]; APPLE-1005, 4:48-57.

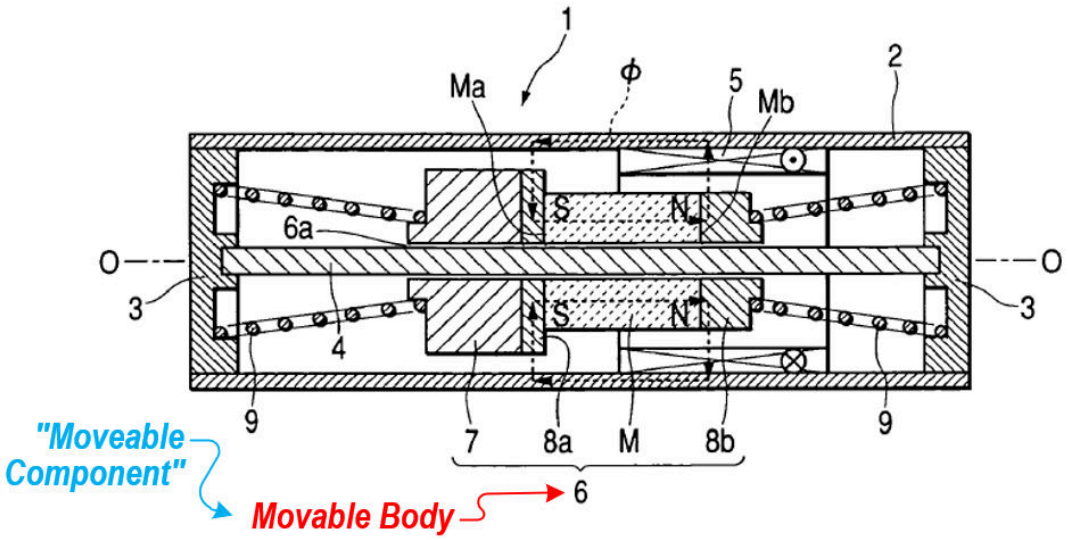

APPLE-1005, Figure 2

[1c]

Wakuda-Ramsay provides a power supply that supplies current to "coil 5." APPLE-1005, 4:42-47. Referring to Figure 1 below, Wakuda describes that current is supplied to the coil to generate a magnetic force. *Id.*, 6:4-10. To do so, a POSITA would have understood and found obvious that Wakuda's system includes a power supply. APPLE-1003, [105].

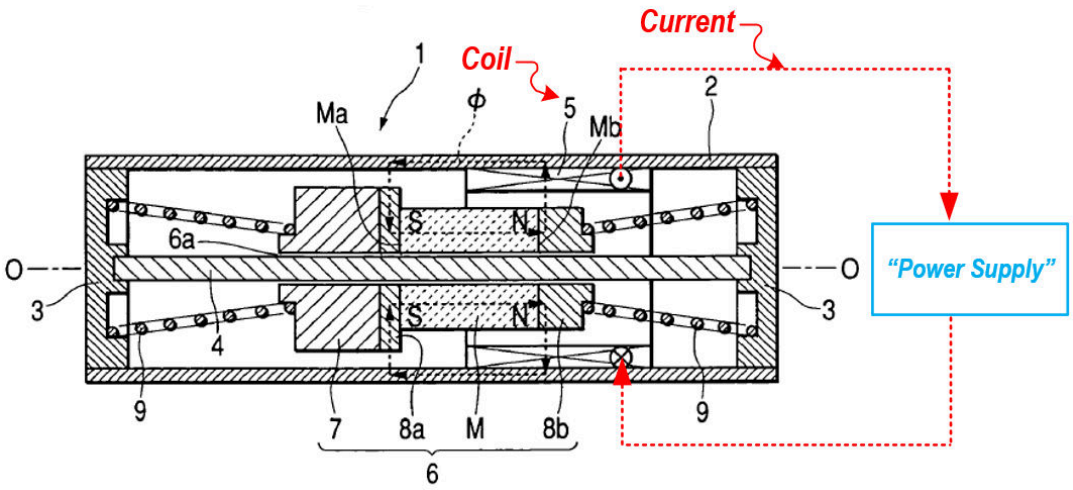

APPLE-1005, Figure 2

Indeed, "terminal devices, such as portable telephones, PDA, portable game equipment[]" were well-known to include a battery or connect to a power source to supply power to components internal to the devices. APPLE-1005, 1:11-14; APPLE-1003, [106] (citing APPLE-1019 and APPLE-1007).

[1d]

Wakuda-Ramsay includes user-input features ("input/output device") as provided in Wakuda's "terminal devices, such as portable telephones, PDA, portable game equipment[]." APPLE-1005, 1:11-16; APPLE-1003, [107]-[108] (citing APPLE-1010). Similar to Wakuda's terminal devices, Ramsay describes "end user device," such as "mobile handset, cell phone, personal digital assistant (PDA)," which includes "input/output devices." APPLE-1006, [0019], [0022], [0024] ("keyboards, keypads," "touch screen," "touch pads, buttons, sliders").

[1e]

Wakuda-Ramsay provides the driving component ("coil"), which generates a driving force in each of two opposite directions, such as X1 and X2 directions in Wakuda's Figure 1A. APPLE-1003, [109]; APPLE-1005, 6:4-10, Figures 1A-1B.

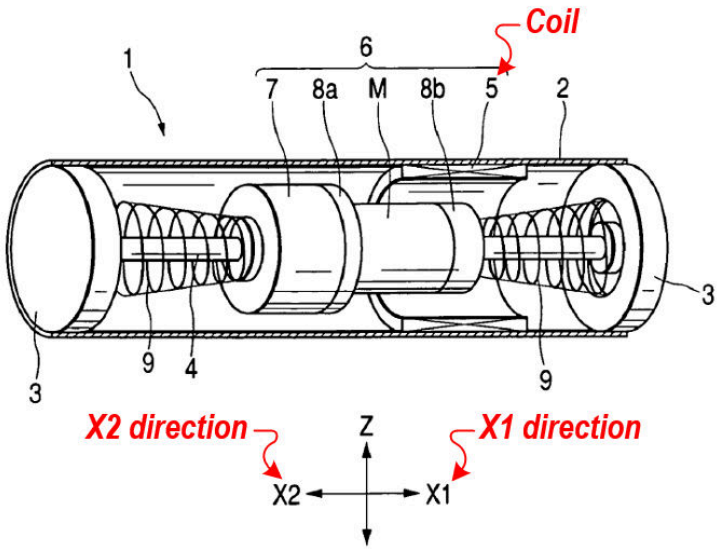

APPLE-1005, Figure 1A

[1f]

Wakuda-Ramsay provides a control component ("control means 10"). APPLE-1003, [110]; APPLE-1005, 6:23-39. Wakuda's control means includes "signal generation means 12" that "generates a drive signal S1 on the basis of a command from the vibration control means 14 to output the same to the drive means 13." APPLE-1005, 6:23-39. According to the drive signal S1, the drive means 13 provides "a drive current having a predetermined waveform ... to the terminal Ta1 and the terminal Ta2 of the coil 5." *Id.* Because the drive means supplies the drive current to the coil of the vibration generating means, a POSITA

would have readily understood and found obvious that the drive means includes, or is coupled to, the power supply ([1c]), and that the control means (control component) controls, via the drive signal, the supply of current (supply of power) from the power supply, which is included in or coupled to the drive means, to the coil (moveable component ([1b])). APPLE-1003, [110]; APPLE-1005, Figures 3-4 (below). Indeed, "the signal generation means 12 performs control, such as switching of current direction of the drive signal S1," which is an apparent example of controlling supply of power from the power supply to the driving component. APPLE-1005, 6:45-47; APPLE-1003, [110].

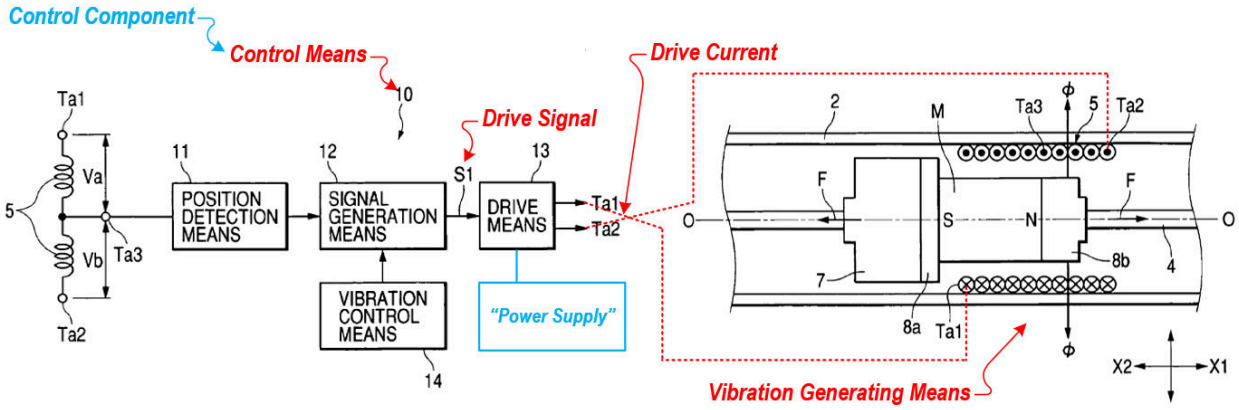

APPLE-1005, Figures 3 and 4

As discussed in [1c], Wakuda describes applying current in opposite directions (X1 and X2 directions) to generate driving forces in opposite directions and cause the movable component to oscillate. APPLE-1003, [111]; APPLE-1005, 6:4-10. Further, Wakuda describes that the oscillation occurs at a frequency and an

amplitude because the drive signal is configured such that "a vibrational waveform of the movable body makes an envelope" and "the envelope can be changed in frequency and amplitude, so that it becomes possible to generate a variety of vibrations." APPLE-1005, Abstract, 2:18-46, 9:12-10:42.

In the resulting system, the frequency and amplitude are specified by user input received from the user-input features (Ramsay's on-device user interface allowing a user to input frequency and amplitude). APPLE-1003, [112]; APPLE-1006, [0005], [0015]. Particularly, the Wakuda-Ramsay vibration module includes "on-device" GUI with a menu option, as taught by Ramsay. APPLE-1006, [0015], [0024], [0032], [0053]; APPLE-1003, [112]-[113]. Through GUI, "[c]ertain parameters or characteristics of a haptic output or haptic track can be created, entered, changed, modified, etc." and such "modifiable parameters may include a frequency of vibration and amplitude of vibration." APPLE-1006, [0030]-[0033], [0046], [0053]-[0055]; APPLE-1003, [112].

[1g]

Wakuda-Ramsay's vibration module includes flux paths, as taught by Wakuda. APPLE-1003, [114]. Wakuda renders obvious a magnetic flux created in the resulting actuator—Wakuda's "vibration generating means" structure. §IV.A.3. Referring to Figure 1B below, Wakuda's "magnetic flux φ generated by the magnet M" defines a magnetic path through the yoke members 8a, 8b and the

casing 2. APPLE-1005, 5:56-64. Notably, to create this magnetic path, Wakuda requires that the casing 2 and the yoke members 8a, 8b of the Wakuda-Ramsay's actuator be "made of a magnetic substance." *Id.*, 4:34-36, 4:51-54.

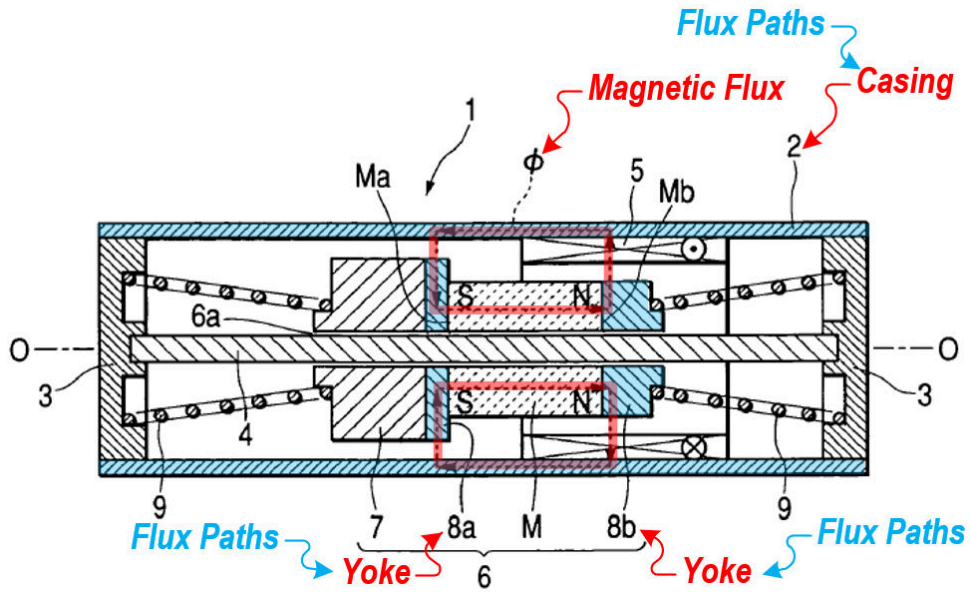

APPLE-1005, Figure 1B

A POSITA would have understood and found obvious that, in the resulting actuator, the casing, alone or along with the yoke members, corresponds to the flux paths because the casing and the yoke members are made of magnetic substance/material, thereby reducing the reluctance of the magnetic path defined at the actuator (i.e., magnetic circuits within the vibration module) despite air gaps between the actuator components (e.g., Wakuda's casing and movable body). APPLE-1003, [115]; APPLE-1005, 4:34-54. Indeed, the concept that air gap increases reluctance of a magnetic circuit was well-known, and thus it was well-

known and obvious to shape and position the actuator components (or materials thereof) that define a magnetic path so as to reduce magnetic reluctance and increase magnetic flux. APPLE-1003, [115] (citing APPLE-1012).

Additionally, a POSITA would have understood and found obvious that a paramagnetic material was beneficially used for the "magnetic material" for the casing and yoke members of the Wakuda-Ramsay's actuator. APPLE-1003, [116]; APPLE-1005, 4:34-54, 5:56-64. Indeed, paramagnetic materials are one of a few categorical options for magnetic materials. APPLE-1003, [116] (citing APPLE-1032 (describing paramagnets as one of four types of magnetic material), APPLE-1035, APPLE-1037). By way of example, a POSITA would have readily recognized that aluminum was a known example paramagnetic material and widely used for the housing of haptic feedback actuators and devices employing the actuators, which can become part of a magnetic path. APPLE-1003, [116] (citing APPLE-1031, APPLE-1013).

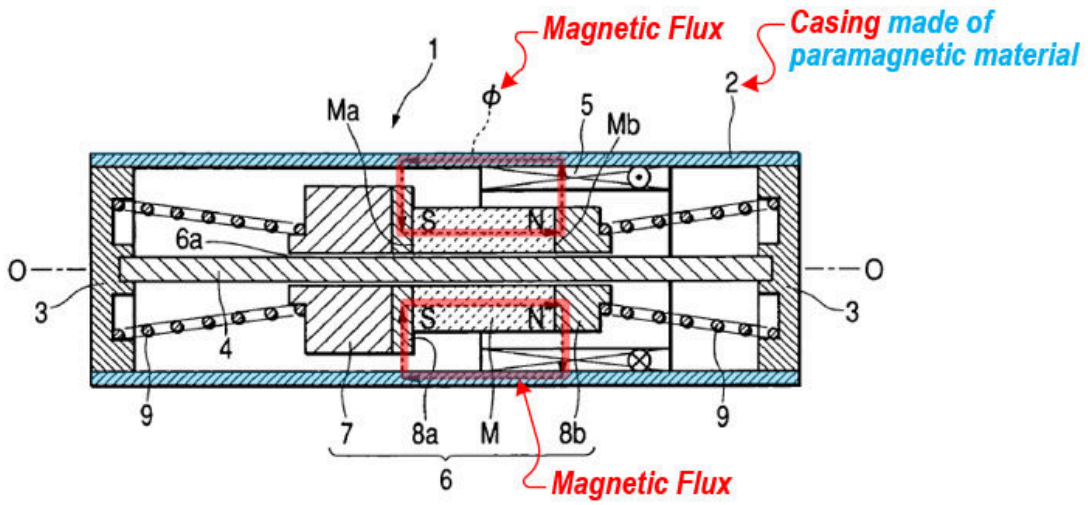

APPLE-1005, Figure 1B

Several reasons would have motivated a POSITA to implement the casing of Wakuda-Ramsay's actuator using a paramagnetic material (e.g., aluminum). APPLE-1003, [117]. As described above, Wakuda-Ramsay includes the casing "made of a magnetic substance." APPLE-1005, 4:34-36, 5:59-64. Therefore, a POSITA would have investigated example magnetic materials for the casing such that the casing defines a part of the magnetic flux, as taught by Wakuda. APPLE-1003, [117]-[118]. As described above, a paramagnetic material was a well-known type of "magnetic substance" mentioned in Wakuda and provided adequate permeability to define the magnetic flux as identified in Wakuda. *Id.* (citing APPLE-ex, APPLE-1035, APPLE-1037).

Further, well-known paramagnetic materials (e.g., aluminum) were lighter than other popular magnetic materials like iron and steel, making it a superior

choice for applications where weight matters, such as Wakuda-Ramsay's portable handheld device. APPLE-1003, [119]. A POSITA would have been motivated to use a paramagnetic material in the resulting system to better serve the objectives of Wakuda—namely, making portable handheld devices of small form factor. *Id.*; APPLE-1005, 1:11-14.

Moreover, paramagnetic materials (e.g., aluminum) were well-known to be naturally resistant to rust and corrosion, giving it a longer lifespan in harsh environments compared to other popular magnetic materials like iron and steel. APPLE-1003, [120] (citing APPLE-1027, APPLE-1028). Therefore, a POSITA would have been motivated to choose such paramagnetic materials for the casing of portable handheld devices, which are intended to be frequently exposed to various daily environments (e.g., high/low temperature, humidity, etc.). *Id.*

Additionally, paramagnetic materials (e.g., aluminum) were excellent conductors of electricity and heat, making it suitable for various electrical applications such as the Wakuda-Ramsay's actuator system. APPLE-1003, [121] (citing APPLE-1029, APPLE-1030).

Lastly, the implementation of Wakuda-Ramsay's actuator to use paramagnetic materials would have been predictable because doing so was the application of known techniques (known materials for actuator elements) to a known device (Wakuda-Ramsay's actuator) ready for improvement to yield

predictable results (benefits articulated above). *KSR*, 550 U.S. 417. A POSITA would have had a reasonable expectation of success in making the proposed modifications because the modifications would have been implemented by merely applying paramagnetic materials to Wakuda-Ramsay's actuator. APPLE-1003, [122]. The combination would modify Wakuda-Ramsay's actuator only to the extent that it is necessary to implement the material of the casing of the actuator, and Wakuda-Ramsay's actuator would otherwise remain unchanged and perform intended operations. *Id.*

Notably, the "magnetic path, along which the flux pass inside the casing 2 made of a magnetic substance" in the resulting system achieves the same function as the '337 patent's "paramagnetic flux paths." APPLE-1003, [123]; APPLE-1005, 5:59-64; APPLE-1001, 13:52-67 ("lower-resistance path for magnetic flux, providing that they have adequate permeability and size to avoid saturation"); *In re Kuhle*, 526 F.2d 553, 555 (CCPA 1975) (use of claimed feature solves no stated problem and presents no unexpected result and "would be an obvious matter of design choice within the skill of the art"); *Ex parte Maeda*, Appeal No. 2010-009814 (Oct. 23, 2012) (informative). In fact, the '337 patent offers no evidence of unexpected results or a difference in function when using paramagnetic materials to define flux paths, other than what has been already achieved by Wakuda-Ramsay's solution ("magnetic substance" for casing). APPLE-1003,

[123]; *In re Chu,* 66 F.3d 292, 298-99 (Fed. Cir. 1995) ("design choice" is appropriate where the applicant fails to set forth any reasons why the differences between the claimed invention and the prior art would result in a different function); *Ex parte Spangler*, Appeal No. 2018-003800 (Feb. 20, 2019) (informative) (affirming the examiner's obviousness rejection, which determined that claimed relative lengths and locations of two claimed components were a matter of obvious design choice because the specification did not suggest that the relative lengths or locations were critical to the claimed invention).

[2pre]-[2f]

Supra, [1pre]-[1f]; APPLE-1003, [124].

[2g]

Wakuda-Ramsay renders obvious that the control component ([2f]) causes the moveable component to simultaneously oscillate at multiple frequencies to thereby generate complex vibration modes. APPLE-1003, [125]. For example, Wakuda's vibration generator system operates the movable body at two frequencies, such as a natural/resonant frequency and an envelope frequency that is lower than the natural frequency. APPLE-1005, 2:18-46, 9:12-10:42, Figures 5-6.

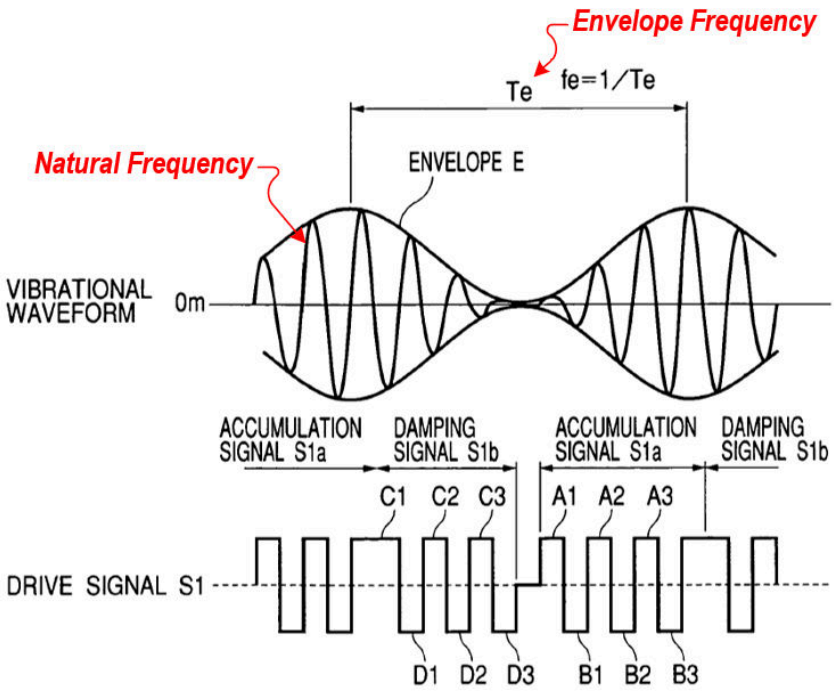

APPLE-1005, Figure 5

Additionally, Ramsay describes that "one or more frequencies" can be entered for each haptic track. APPLE-1006, [0046]. Further, Ramsay enables users to "combine or mix different haptic tracks together if desired to provide a fuller haptic experience," and such mixed track files can be stored in memory. *Id.*, [0030], [0027]. When multiple haptic tracks are mixed to overlap with one another in time, "two or more haptic tracks can be programmed to be simultaneous or partially overlapping in time in any desirable manner." *Id.*, [0047]. Through these, a POSITA would have understood and found obvious that the Wakuda-Ramsay system drives simultaneous oscillation of the movable component at two or more frequencies, as included in a single haptic track or in a mixed track that

combines multiple haptic tracks having different frequencies. APPLE-1003, [126]. A POSITA would also have recognized and found obvious that Ramsay's single haptic track having multiple frequencies or mixed haptic tracks with different frequencies combined would generate complex vibration modes, which would results in "a fuller haptic experience." *Id.*; APPLE-1006, [0030].

Notably, Wakuda-Ramsay's disclosure satisfies one of Patent Owner's means-plus-function constructions of "control component" in claim 2 alleged in co-pending litigation. APPLE-1003, [127]; APPLE-1046, 12 (Patent Owner alternatively identifies "microcontroller with internal or external memory; processor; CPU; microprocessor; and equivalents thereof" as the corresponding structure). Particularly, a POSITA would have understood and found obvious that, in Wakuda-Ramsay, Wakuda's control component ("control means") is implemented based on Ramsay's teachings of processor and memory. APPLE-1003, [127]. For example, Ramsay's "end user device 10" includes "processor 14" and "memory 16" as the control component for operating "haptic actuating device 18." APPLE-1006, [0020], [0022]. "[P]rocessor 14 controls the functions of end user device 10 and can execute software stored in memory 16," which stores "[f]iles associated with haptic effects". *Id.*, [0024], [0027]. Further, Wakuda-Ramsay's "[p]rocessor 14 may be a general-purpose or specific-purpose processor or microcontroller" and execute "programmable haptic design software" that "can

be implemented in hardware, software, firmware, or a combination thereof" using, for example, "discrete logic circuitry, an application specific integrated circuit (ASIC), a programmable gate array (PGA), a field programmable gate array (FPGA), etc., or any combination thereof." APPLE-1006, [0025], [0043].

[3]

Wakuda-Ramsay's complex vibration modes include a primary oscillation frequency (natural/resonance frequency) modulated by a modulating oscillation frequency (lower envelope frequency in [2g]); a beat frequency (the difference between the resonance frequency and the lower envelope frequency); and an aperiodic oscillation waveform (irregular waveform illustrated in Wakuda's Figure 6). APPLE-1003, [128].

Particularly, Wakuda's "vibrational waveform of the movable body 6" includes a natural/resonance frequency (primary frequency) and an envelope frequency defined by "a line connecting peaks of amplitude of the movable body 6 together" and adjustable to be "bodily sensed." APPLE-1005, 9:12-48, Figure 5; APPLE-1003, [129]. Further, like the '337 patent, the difference between the higher resonance frequency and the lower envelope frequency is the beat frequency. APPLE-1003, [129] (citing APPLE-1001, 13:13-41, Figures 22A-23; APPLE-1005, 2:29-46).

Further, Wakuda contemplates the waveform of the envelope to be freely

adjusted to be irregular and therefore aperiodic, by "changing contents of an accumulation signal S1a and a damping signal S1b" to create various feedback sensations. APPLE-1003, [130]; APPLE-1005, 9:49-62, 3:12-14, Figure 6 (illustrating "the envelope E is shaped to abruptly rise and gently converge.").

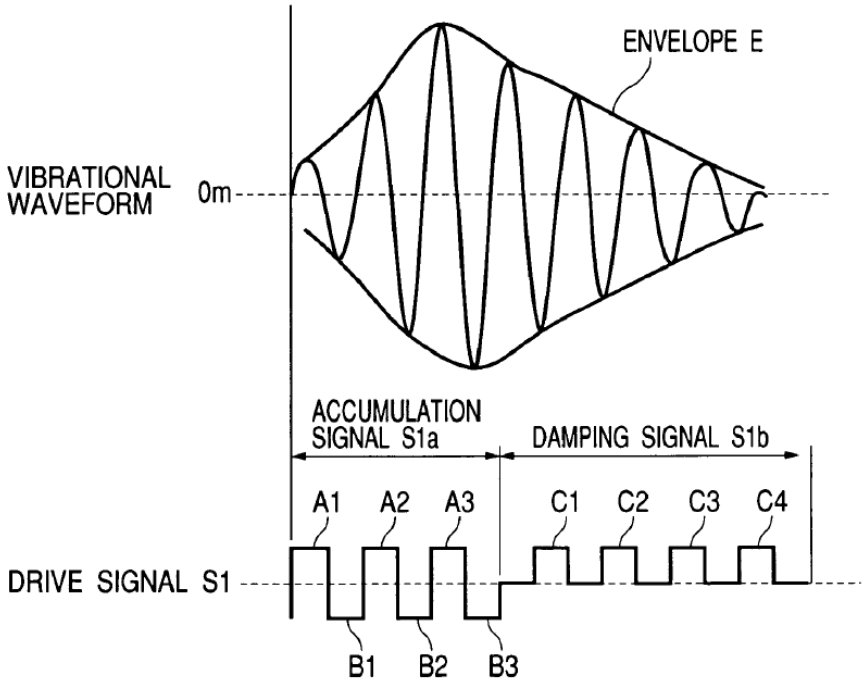

APPLE-1005, Figure 6

It also would have been obvious to use Wakuda-Ramsay's system to generate complex vibration modes that include additional aperiodic waveforms wherein the resonance frequency changes irregularly over time. APPLE-1003, [131]. The resonant frequency of an actuator was well-known to change depending on various factors, such as user's interaction with a haptic-enabled device. *Id.* (citing APPLE-1004, 3:50-4:5, 2:5-9). Therefore, the resonant

frequency of the Wakuda-Ramsay system's complex vibration mode would have obviously varied when, for example, the user aperiodically changes the position of the device, how the device is held, and/or the shape of the device. APPLE-1003, [131]. The resulting waveform would have been an aperiodic waveform according to the irregular change of the resonance frequency. *Id*.

[4pre]-[4e]

Supra, [1pre]-[1e]; APPLE-1003, [132].

[4f]

As discussed in [1f] above, Wakuda-Ramsay's control component controls supply of power from the power supply to the driving component to cause the moveable component to oscillate at a frequency and an amplitude specified by user input received from the user-input features. APPLE-1003, [133]. In Wakuda-Ramsay, such frequency and amplitude parameters are independently specified by user input received from the user-input features. *Id.* Particularly, Wakuda-Ramsay enables a user to independently enter and modify "a frequency of vibration and amplitude of vibration" through "on-device" GUI. [1f]; APPLE-1006, [0015], [0024], [0030]-[0033], [0046], [0053]-[0055]; APPLE-1003, [134]. Indeed, the resulting system "enables user to modify such features as … magnitude," and "[i]n addition, ... enables the user to enter one or more frequencies for the haptic track." *Id.*, [0046], [0054] ("'magnitude' may be called amplitude"); APPLE-1003, [134].

B. GROUND 2: Wakuda-Ramsay-Rossi-Aldrich Renders Obvious Claims 1-4 (Both Parties' Means-Plus-Function Constructions)

1. Rossi

Rossi's H-bridge switching circuit includes "two pairs of analog switches arranged in a bridge configuration." APPLE-1020, Abstract; 1:65-3:55, Figures 4, 6, cls. 1, 3, 4. The H-bridge circuit includes a "driving signal IN1" input, which is split, and a portion passed through an "inverter I" to generate an internal "driving signal IN1" and an "inverted signal thereof $\overline{\text{IN1}}$." *Id.*; APPLE-1003, [74]-[79].

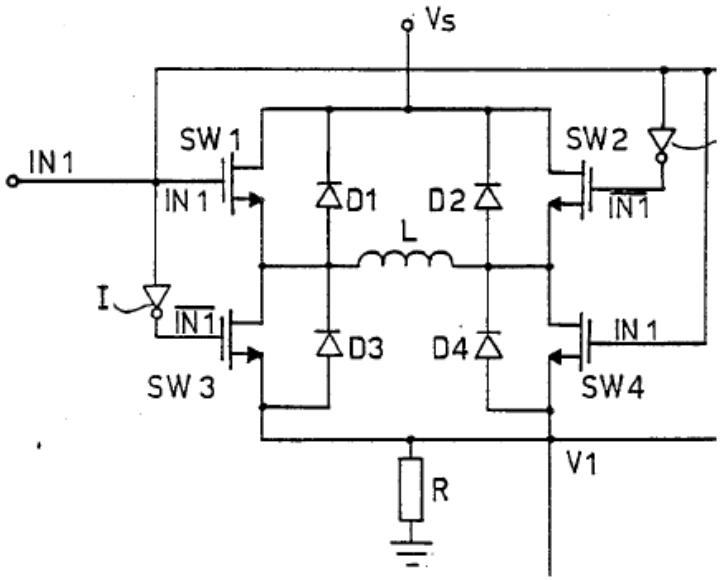

APPLE-1020, Figure 6 (partial)

2. Aldrich

Aldrich describes a feedback control algorithm to drive an actuator to "one of the resonance peaks and eventually to oscillate about the peak." APPLE-1021,

11-12; APPLE-1003, [80]-[83]. The drive frequency is incremented or decremented. *Id.* If the increment or decrement results in an increased output (e.g., current/voltage ratio), the direction of change (increase or decrease) of frequency is accepted and another such change (increment or decrement) is made during the following sampling period. *Id.* If, on the other hand, the increment or decrement results in a decrease in output, the direction of change of frequency during the following sampling period is reversed. *Id.* This process is repeated during oscillation to maintain oscillation about a resonant frequency. *Id.*

3. Wakuda-Ramsay-Rossi-Aldrich Combination

(a) Wakuda-Ramsay-Rossi

In the predictable combination, Wakuda-Ramsay's actuator system includes a switch (e.g., H-bridge switch circuit) having a control signal input, splitter and control signal inverter, in accordance with Rossi, that receives the control signal from the processor, in accordance with Wakuda-Ramsay's feedback control. APPLE-1003, [135]-[137]. Such a configuration would have yielded the predictable result of oscillating the actuator's magnet by switching the polarity of drive signals generated based on Wakuda-Ramsay closed-loop concepts for feedback control. *Id.*

Several reasons would have motivated a POSITA to implement Rossi's switch in the Wakuda-Ramsay system. APPLE-1003, [138]-[144]. First, although

Wakuda describes applying current through the coil in opposite directions to oscillate the movable body, Wakuda-Ramsay does not expressly disclose specifics of a circuit for switching the current flow. APPLE-1005, 6:4-10. Therefore, a POSITA would have investigated other teachings like Rossi that demonstrated the conventional knowledge of implementing such a circuit to provide oscillating power, in furtherance of Wakuda-Ramsay's objectives. *Id.*, [138]-[139]; APPLE-1005, 6:4-10; APPLE-1020, 1:65-2:11, 3:43-55, Figures 4, 6. Indeed, an H-bridge switch was a well-known example circuit to implement a change in current flow to oscillate the movable body in a system like Wakuda-Ramsay's. APPLE-1003, [138]; APPLE-1023, 7:47-50 ("well-known H-bridge circuit").

A POSITA would have recognized the benefits from Rossi's straightforward teachings of providing complementary drive signals for respective sets of the four H-bridge transistors, such that current/voltage is applied in one of two opposite directions through the coil. APPLE-1003, [139]-[142]; APPLE-1020, Abstract, 1:65-3:54; Figures 4, 6. Rossi explicitly indicates the predictable benefit of a configuration that is effective to "functionally switch the load L between the supply node Vs, and virtual ground nodes," thereby reliably driving the movable magnet head of the actuator. APPLE-1020, 2:4-12.

Second, a POSITA would have been motivated to combine Wakuda-Ramsay and Rossi to avail the system of a simple, cost-effective, and reliable circuit design.

APPLE-1003, [143]. A POSITA would have recognized that Rossi's controlling the four transistors of the H-bridge using a control signal from the "processor" that is split and inverted would reliably result in complementary internal signals, which promotes simplicity in the control signal generation and the circuit to deliver the drive signal to the coil. *Id.*

Third, a POSITA would have recognized that combining Rossi and Wakuda-Ramsay was the application of known techniques (Rossi's H-bridge circuit implementation) to a known device (Wakuda-Ramsay's system that switches polarity of current) ready for improvement to yield predictable results (benefits articulated above). *KSR*, 550 U.S. at 417. A POSITA would have had a reasonable expectation of success in making the proposed modifications based on the similarity of the function of the H-Bridge switch circuit in Rossi and Wakuda-Ramsay, and because the modifications would have been implemented largely through routine circuit design considerations and software instructions for generating the control signal. APPLE-1003, [144].

(b) Wakuda-Ramsay-Rossi-Aldrich

In the predictable combination, Aldrich's control algorithm is implemented in Wakuda-Ramsay-Rossi's system that utilizes sensor feedback to control vibration output about a resonant frequency. APPLE-1003, [145]. In the combined system, sensor outputs would be processed using Aldrich's control

algorithm techniques, thereby achieving Wakuda's goal of "generat[ing] a drive signal S1 tracking the resonance frequency of the movable body." *Id.*; APPLE-1005, 10:27-32, 6:48-55. For example, to generate control signals that maintain oscillation at/near resonance, the drive frequency would be incremented or decremented, and a currently measured vibration strength parameter, would be compared with a previously measured vibration strength parameter. APPLE-1003, [145]; APPLE-1021, 2. According to Aldrich, if the increment or decrement results in an increased vibration strength, the direction of change (increase or decrease, respectively) of frequency is accepted and another such change (increment or decrement, respectively) is made during the following sampling period. *Id.* If the increment or decrement results in a decrease in vibration strength, the direction of change of frequency during the following sampling period is reversed. *Id.*

Further, the resulting system would implement Aldrich's hill-climb technique using a Boolean value to indicate whether the frequency was being increased. APPLE-1003, [146]. The use of Boolean values to track such a parameter was conventional, and would have been selected as a matter of routine implementation based on Aldrich's switching between incrementing and decrementing frequency. *Id.* (citing APPLE-1026, 29). Indeed, based on Aldrich's description of reversing the direction of frequency change, a POSITA would have

predictably utilized a Boolean variable to track the direction of frequency change. *Id.*; APPLE-1021, 2.

Additionally, the resulting system would implement Aldrich's hill-climb technique in a feedback control loop in which local variables are set to default variables. APPLE-1003, [147]. A POSITA would have recognized and found it obvious to set local variables to default values so that the control signal is generated to produce oscillation, which is then adjusted as appropriate through feedback control. *Id.* A POSITA would have been motivated to set default values for specific local variables to facilitate initiation of the actuator close to expected and/or user-selected operating parameters. *Id.*

Further, a POSITA would have been prompted to utilize integer values when processing sensor signals. In the combined system, the sensor signals are an integer value, which facilitates digitally processing the signals, and efficient computation and processing of the force values represented by the sensor signals. APPLE-1003, [148]; APPLE-1021, 2. The use of integer values amounted to a mere design choice (between integer or non-integer values). APPLE-1003, [148]. Moreover, a POSITA would have readily recognized the efficiency and effectiveness of utilizing an integer value associated with the sensor signals. *Id.*

Multiple reasons would have prompted a POSITA to implement Aldrich's "hill-climbing" control algorithm in the Wakuda-Ramsay-Rossi system. APPLE-

1003, [149]-[150]. Particularly, the Wakuda-Ramsay-Rossi-Aldrich combination utilizes a known feedback algorithm for targeting a resonant frequency, thereby improving the resulting system with the known benefits from the algorithm. APPLE-1003, [151]. Although Wakuda describes detecting a position of the movable body to generate a drive signal for driving the movable body in the manner that tracks the resonant frequency of the movable body, Wakuda generally lacks implementation details of doing so. *Id.*; APPLE-1005, 6:40-62, 10:22-42. Understanding the shortage of details and thus attempting to implement and improve Wakuda-Ramsay-Rossi's monitoring/adjusting method, a POSITA would have predictably looked to other teachings like Aldrich for such details, especially where Aldrich explicitly describes driving an actuator at/near resonance using known control algorithms. APPLE-1003, [151]; APPLE-1021, 1-3.

Further, the Wakuda-Ramsay-Rossi-Aldrich combination would implement feedback control according to Aldrich's technique that continuously updates the control outputs throughout operation of the system. APPLE-1003, [152]. Aldrich's algorithm continuously facilitates comparison of current and previous parameters throughout device operation so that the control outputs (e.g., frequency of the control signal) can be adjusted to maintain oscillation at/near resonance frequency, furthering the explicit objectives of Wakuda-Ramsay-Rossi and Aldrich. *Id.*

This combination was the application of known techniques (Aldrich's "hill-climbing" feedback control algorithm) to a known system (Wakuda-Ramsay-Rossi's system that uses feedback control) ready for improvement to yield predictable results (benefits articulated above). *KSR*, 550 U.S. at 417; APPLE-1003, [153].

Moreover, a POSITA would have had a reasonable expectation of success in making the proposed modifications based on the applicability of Aldrich's method to Wakuda-Ramsay-Rossi's resonant system architectures, and because the modifications would be largely implemented via software executed by the microprocessor. APPLE-1003, [154]. In the combined system, sensor outputs would be received and processed by Wakuda-Ramsay-Rossi's processor using at least Aldrich's "hill-climbing control algorithm" "to find and remain within the vicinity of the resonance." APPLE-1021, 2. For example, it would have been obvious to a POSITA to modify Wakuda-Ramsay-Rossi's processor to include a control program based on Aldrich's algorithm. APPLE-1003, [154]. Implementing Aldrich's algorithm as a control program for applying continuous feedback control about a resonant frequency would have been a routine software change, requiring application of known coding techniques. *Id.*

4. Analysis

[1pre]-[1e], [1g]

Supra, Ground 1, [1pre]-[1e], [1g] (explaining that Wakuda-Ramsay discloses the same limitations); APPLE-1003, [155]-[157], [190].

[1f]

Under the means-plus-function construction (§II.C.1), the Wakuda-Ramsay-Rossi-Aldrich combination's vibration module includes the recited control component. APPLE-1003, [158].

First, the resulting system would include "processor 14" and "memory 16" as the control component, as taught in Ramsay. Ground 1 ([1f]); APPLE-1006, [0020]-[0024], [0027]; APPLE-1003, [159].

Further, the combination includes a switch (e.g., H-bridge switch) according to Rossi. APPLE-1003, [160]. A POSITA would have found obvious that, based on the Wakuda-Ramsay-Rossi-Aldrich combination, the processor is programmed to provide a control output to the H-bridge switch for controlling the direction of the drive signal through the coil. *Id.* For example, a control signal is output from the processor to a transistor of the H-bridge switch to control whether the transistor is in an open or closed state, providing the direction signal. *Id.* In the resulting system, the switch receives a directional signal (e.g., at "IN1") that selects a corresponding direction of the opposite directions in which the driving component drives the moveable component. *Id.*; APPLE-1020, 1:65-2:15; 3:44-55.

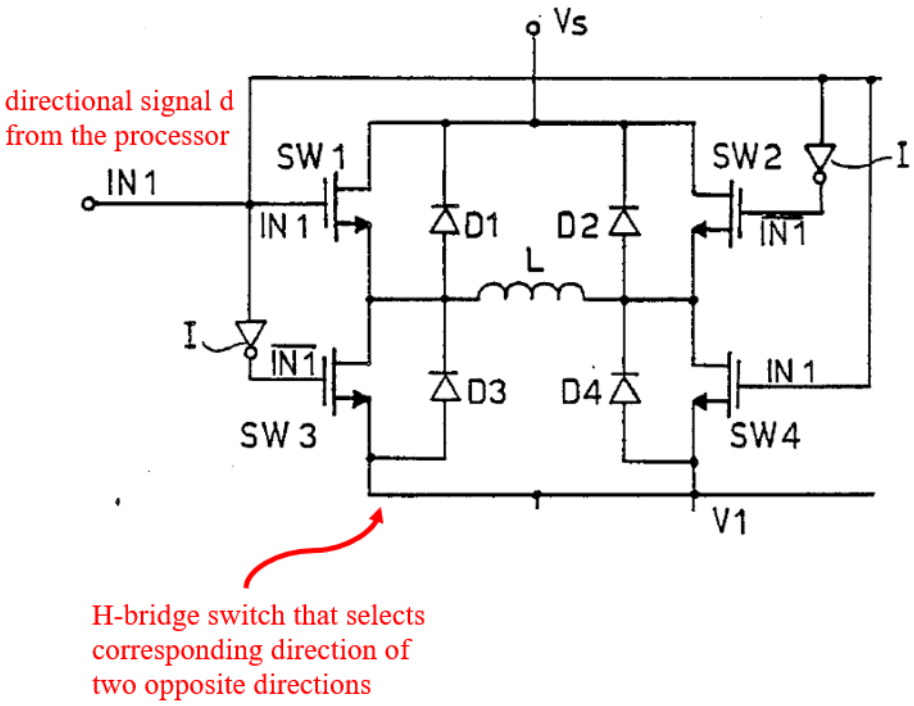

APPLE-1020, Figure 6 (partial)

Moreover, the Wakuda-Ramsay-Rossi-Aldrich combination provides that the processor is programmed with the algorithm described in Figures 7A-7C of the ’337 patent under the means-plus-function construction. §II.C.1; APPLE-1003, [161].

Step 702 of the ’337 patent’s algorithm begins execution upon a power-on event. APPLE-1001, 6:48-50. In the combined system, the software instructions of the processor similarly begins execution upon a power-on event invoked by a user through a power button or other user control. APPLE-1003, [162]. Indeed, the combined system includes user-input features as taught by Wakuda-Ramsay

([1d]), which a POSITA would have readily recognized included a power on/off button and were used to power on/off the system. *Id.*

In the '337 patent's step 702, "various local variables are [then] set to default values." APPLE-1001, 6:50-61. Similarly, the software of the processor in the combined system sets the same local variables to default values. APPLE-1003, [163]-[165], [84]-[85] (citing APPLE-1024, APPLE-1006); §IV.C.3.(b) (describing the POSITA's motivation for this implementation). Further, in the combined system, the default values (e.g., mode and strength) include values representing selections made by user input to the user-input features, as taught by Ramsay. *Id.* In the resulting system, the set-point values (e.g., default values or values representing user-selections) include variables consistent with the seven variables recite by the '337 patent, according to the means-plus-function construction. APPLE-1003, [166]-[167].

For example, the combination includes a current operational ***mode*** of the device. APPLE-1003, [168]-[172]. Indeed, the combined system uses multiple different "haptic tracks" (operational modes) based on haptic parameters including frequency and amplitude as taught by Ramsay. *Id.*; APPLE-1006, [0028], [0030], [0034], [0042], [0049], [0058]. Particularly, Ramsay describes "ROM 28 may be configured to store a library of preset haptic tracks." APPLE-1006, [0028]. Accordingly, the combined system would operate based on one of the stored pre-

defined haptic effects (***default operational mode***), such as an effect in which feedback control maintains oscillation at the mechanical resonant frequency, when initialized. APPLE-1003, [168]-[171] (describing predictable benefits of a variable to indicate to the control program the operational mode). Further, the combined system would operate based on one of the haptic tracks (i.e., mode) created or modified by the user through GUI (i.e., the mode set to values representing selections made by user input to the user-input features), as taught by Ramsay. *Id.*; §IV.A.2-3. Additionally, the combined system includes one or more alternative or complex modes of operation that systematically and/or periodically alter the frequency or produce various complex, multi-component vibrational modes. APPLE-1003, [172] (describing example multi-component vibrational techniques that "combine haptic tracks" and/or that systematically/periodically alter the output over time); APPLE-1006, [0035]-[0039], [0047], [0057]-[0059]. For example, as discussed above, Ramsay describes multiple haptic tracks being mixed to drive simultaneous oscillation of the movable component at two or more frequencies. Ground 1, [2g]. Ramsay also describes "a library of preset haptic tracks" having different haptic parameters and/or that are combined. APPLE-1006, [0028].

The combination includes a ***strength*** variable (magnitude). APPLE-1003, [173]. For example, Ramsay describes that a magnitude variable is user-configurable through GUI. APPLE-1006, [0022]-[0026], [0030]-[0033], [0046],

[0053]-[0055]; §IV.A.2-3; Ground 1, [1f]; APPLE-1003, [173], [86]-[91] (citing APPLE-1023, APPLE-1025). Accordingly, the combined system operates based on one of the strength settings (as part of the predefined or user-configured haptic effects) when it is powered on. APPLE-1003, [173]-[174].

The combination also includes ***sensed values*** that include previously-sensed (lv0) and currently-sensed (lv1) vibrational strength values. APPLE-1003, [175]. The combined system includes a currently sensed vibration strength value and a previously sensed vibration strength value that are compared in carrying out the control algorithm. *Id.*; APPLE-1021, 12 (describing evaluation of frequency change results in increase or decrease of vibration output). The variables are initialized with default values that provide a starting point for operation (e.g., zero). APPLE-1003, [175].

The combination includes a ***frequency*** (freq) at which current is changed in the coil, and the directional ***control signal*** (d) from the processor. APPLE-1003, [176]; APPLE-1021, 1-3 ("excitation frequency"). In the combination, the frequency variable is initialized with default values to provide a starting point for operation (e.g., based on the stored "haptic effect" or "haptic track," or an assumed resonant frequency). APPLE-1003, [176]. For example, Wakuda describes use of a default frequency value upon initialization based on "the natural frequency (resonance frequency) of the movable body 6" that is "determined by a mass of the

movable body 6 and the spring constants (spring constants in the neutral position shown in FIG. 1) of the energizing members 9." APPLE-1005, 7:26-43. Further, the directional signal, for example, is initialized with a default value (e.g., high or low), which is then reversed during operation to induce oscillation according to the feedback control program. APPLE-1003, [176] (describing obvious design choice of initialize direction signal d as high or low) (citing APPLE-1019, APPLE-1020).

The combination includes a ***Boolean value*** (inc) that indicates that the frequency is being increased. APPLE-1003, [177]. The Boolean value tracks the status of frequency increase/decrease to implement the comparison in accordance with Aldrich's control algorithm, as a matter of routine implementation. *Id.* (citing APPLE-1026).

In the '337 patent's step 704, the control program "waits for the next event." APPLE-1001, 6:61-65. In the combined system, the software executing on the microprocessor waits for the next event, such as a sensor input to be used in determining the control signal, or a user input to power down the device or modify haptic effect characteristics. APPLE-1003, [178]; APPLE-1006, [0022]-[0026], [0030]-[0033], [0046], [0053]-[0055]; Ground 1, [1f], [4f]. When sensor signals are received by the microprocessor, the control outputs are adjusted accordingly. APPLE-1003, [178] (citing APPLE-1005, 6:40-47). Indeed, use of a loop or event handler in a feedback control system were known and a conventional technique

readily implemented by a POSITA in order to operate in accordance with the respective event. APPLE-1003, [179] (citing APPLE-1026).

In the '337 patent's step 712, the control program algorithm calls a "monitor" routine," which is illustrated in Figure 7B. APPLE-1001, 7:19-21. The "monitor" routine is a simple and known routine for implementing a feedback loop to maintain operation of a vibration module at or near resonance. APPLE-1003, [180]. The combined system executes the same algorithm. §IV.D.3 (Wakuda-Ramsay-Rossi-Aldrich combination). Particularly, a POSITA would have found it obvious, especially based on Aldrich's feedback control to operate at a resonant frequency, to compare vibration parameters while incrementing or decrementing the drive frequency. APPLE-1003, [180].

The combined system includes one or more sensors, as taught by Wakuda. APPLE-1003, [181]. For example, Wakuda describe a closed-loop control to "generate a drive signal S1 tracking the resonance frequency of the movable body 6." APPLE-1005, 10:31-32; APPLE-1003, [181]. For example, Wakuda's "position detection means 11 detects that the movable body 6 has reached the neutral position ... that is, a middle point in the reciprocation stroke." *Id.*, 6:23-47. The detection signal of the middle point" is provided to the signal generation means 12, and "the signal generation means 12 performs control, such as switching of current direction of the drive signal S1." *Id.* Therefore, the software executed

by the microprocessor in the combined system receives signals from the sensors, indicative of vibrational strength, and compares a current sensed vibration strength value and a previous sense vibration strength value to tune the input frequency about a resonant frequency, consistent with steps 736-750 of Figure 7B of the '337 patent. APPLE-1003, [181]; APPLE-1021, 1-3.

For example, in accordance with Aldrich's suggestions, a current sensed vibration strength value at an incrementally increased control signal frequency is compared with a previous sensed vibration strength value. APPLE-1003, [182]. When the vibration strength has increased with increased frequency input, "then the direction of change . . . of frequency is accepted and another such change . . . is made during the following sampling period." APPLE-1021, 2. This is the same as steps 738-740 of the '337 patent. APPLE-1003, [182].

Similarly, when the vibration strength has not increased with increased frequency input, the control program determines that the resonant frequency has been exceeded. APPLE-1003, [183]; APPLE-1021, 2. The "direction of change of frequency during the following sampling period is reversed," such that the frequency is decremented, and the process continues. APPLE-1021, 2. This is the same as steps 742-744 of the '337 patent. APPLE-1003, [183]. The combined system proceeds in a similar manner when decrementing the input frequency, following steps 746-752 of the '337 patent. APPLE-1003, [184].

In the combined system, the currently and previously sensed sensor signals are processed and stored as integer values. As discussed above, the use of integer values amounts to a known technique mere design choice (e.g., between integer or non-integer values). §IV.B.3 (Wakuda-Ramsay-Rossi-Aldrich combination); APPLE-1003, [185].

In the '337 patent's step 714, the control program calls a "control" routine, which is illustrated in Figure 7C, "when the event corresponds to a change in the user input through the user interface." APPLE-1001, 7:21-24, 8:10-22. In the combined system, the user input provides a change in vibration strength (e.g., in accordance with Ramsay), and the user input is received during a monitoring period so that the input is processed and implemented. APPLE-1003, [186]-[188]. Particularly, the software executing on the microprocessor outputs a corresponding control signal to the power supply in accordance with the user unput. *Id.*

In the '337 patent's step 718, the control program determines whether there has been a power down event. APPLE-1001, 7:24-28. Similar to the power on event described above, a POSITA would have readily recognized that the combined system executes a power-down event in response to user input (e.g., Wakuda-Ramsay's user-input features) that turns the device "off." APPLE-1003, [189].

[2pre]-[2e]

Supra, [1pre]-[1e]; APPLE-1003, [191]-[195].

[2f]-[2g]

As discussed in §II.C.1, under the means-plus-function construction, the corresponding structure for "control component" in claim 2 is identical to the corresponding structure for "control component" in claims 1 and 4, except that the algorithm is further designed for the additional function of "driving simultaneous oscillation of the moveable component at two or more frequencies to generate complex vibration modes." Such additional algorithm is described at column 13 of the '337 patent. APPLE-1001, 13:3-41; APPLE-1003, [192].

As discussed in [1f] above, the Wakuda-Ramsay-Rossi-Aldrich combination provides the additional algorithm for the "complex vibration modes." APPLE-1003, [193]-[194]. For example, the resulting system includes one or more alternative or complex modes of operation that systematically and/or periodically alter the frequency or produce various complex, multi-component vibrational modes. *Id.*; Ground 2 ([1f]); APPLE-1006, [0035]-[0039], [0047], [0057]-[0059].

In the co-pending litigation, Patent Owner alleged the "control component" in claim 2 as a means-plus-function limitation and identified the corresponding structure as "microcontroller with internal or external memory; processor; CPU; microprocessor; and equivalents thereof" and "[if an algorithm is required] [w]here the corresponding structure is a processor, CPU, or microprocessor, the

processor/CPU/microprocessor is programmed with an algorithm comprising the following steps: (a) set the mode and strength to values representing selections made by user input to the user input features; (b) provide a corresponding output to the power supply so that the power supply provides a corresponding output to the driving component; and (c) drive simultaneous oscillation of the moveable component at two or more frequencies." APPLE-1046, 12-13; APPLE-1047, 14-19. Notably, this means-plus-function interpretation is covered by this Petition's mapping based on the Wakuda-Ramsay-Rossi-Aldrich combination above because Patent Owner's interpretation is a broader version of the '337 patent's disclosed algorithm. §II.C.1; APPLE-1003, [195].

[3]

Supra, Ground 1, [3] (explaining that Wakuda-Ramsay discloses the same limitations); APPLE-1003, [196].

[4pre]-[4e]

Supra, [1pre]-[1e]; APPLE-1003, [197].

[4f]

As discussed in §II.C.1, under the means-plus-function construction, the corresponding structure for "control component" in claim 4 is identical to the corresponding structure for "control component" in claim 1. Therefore, the same analysis of [1f] applies here. Ground 2 ([1f]); APPLE-1003, [198].

C. GROUND 3A: Gregorio-Ramsay-Wakuda Renders Obvious Claims 1, 2, and 4 (Plain-and-Ordinary Meaning and Patent Owner's Means-Plus-Function Construction)

1. Gregorio

Gregorio discloses "a system that drives an LRA [Linear Resonant Actuator] to generate vibrotactile haptic feedback on a user interface." APPLE-1004, 2:3-5; APPLE-1003, [57]-[63]. Gregorio's system determines "the resonant frequency of the LRA ... during a drive period and the drive signal can be adjusted to maximize the haptic feedback based on the determined resonant frequency." *Id.*, 3:1-11, 3:58-64, 2:5-9.

Gregorio's "haptically-enabled system 10" can be "a handheld device, such as a cellular telephone, PDA, computer tablet, etc." and "includes a touch sensitive surface 11 or other type of user interface mounted within a housing 15." *Id.*, 2:10-14, 3:1-4, Figure 1.

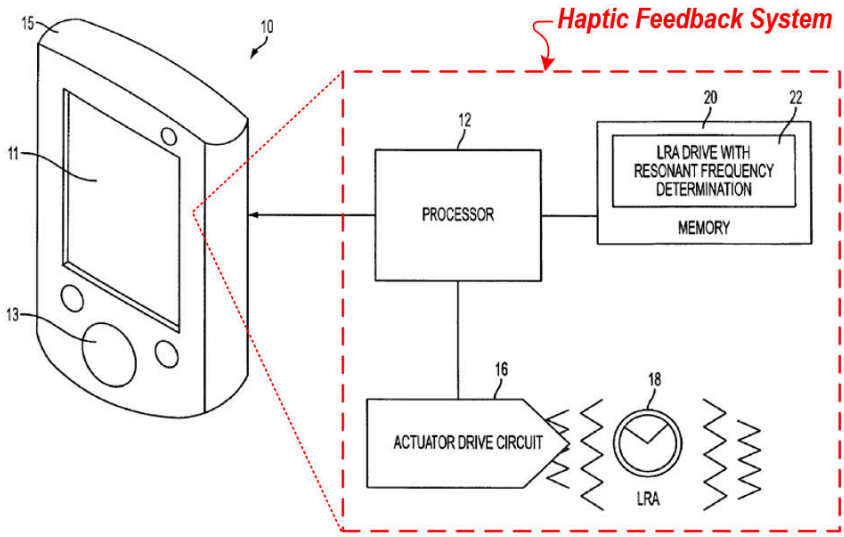

APPLE-1004, Figure 1

Gregorio's "haptic feedback system," which is "[i]nternal to system 10," includes "processor 12," "memory 20," "actuator drive circuit 16," and "LRA actuator 18." *Id.*, 2:14-20. The processor "decide[s] what haptic effects are to be played and the order in which the effects are played based on high level parameters," and "outputs the control signals to drive circuit 16 which includes electronic components and circuitry used to supply LRA 18 with the required electrical current and voltage to cause the desired haptic effects." *Id.*, 2:25-28, 2:36-39. "[M]emory 20 includes ... instructions that, when executed by processor 12, generate drive signals for LRA 18 while also determining the resonant frequency of LRA 18 and adjusting the drive signals accordingly." *Id.*, 2:44-50.

The LRA includes "a casing 25, a magnet/mass 27, a linear spring 26, and an electric coil 28." APPLE-1004, 3:12-14, Figure 2 (below). "[W]hen current flows thru coil 28 a magnetic field forms around coil 28 which in interaction with the magnetic field of magnet 27 pushes or pulls on magnet 27." *Id.*, 3:17-21.

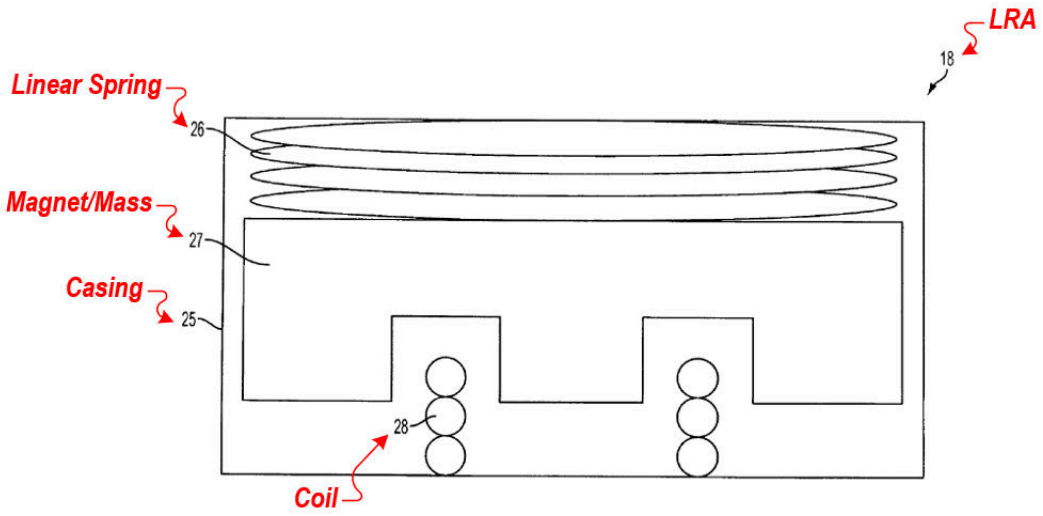

APPLE-1004, Figure 2

Gregorio's system performs "a continuous loop during a drive cycle that includes a drive period and a monitoring period." APPLE-1004, 4:15-20. The system "constantly and dynamically determines the resonant frequency of LRA 18 while during a monitoring period of a drive signal cycle." *Id.*, 3:65-67. "[D]uring the monitoring period (approximately 10%) of the drive cycle, drive circuit 16 'listens' or monitors and receives magnetic back EMF (i.e., the voltage generated by the internal motion inside LRA 18) from LRA 18." *Id.*, 4:24-28. The received back EMF is "used to determine the resonant frequency of the LRA." *Id.*, 4:2-5. "The subsequent drive pulses are then adjusted to account for the resonant frequency." *Id.*, 6:8-9. Gregorio's system can also use "sensing coil, Hall sensor, optical sensor or other type of sensing device that is located in proximity to mass 27 for detecting the position of mass 27." *Id.*, 4:7-14.

2. Gregorio-Ramsay-Wakuda Combination

(a) Gregorio-Ramsay

Similar to Wakuda-Ramsay (§IV.A.3), Gregorio-Ramsay implements Gregorio's system to enable a user to specify parameters (e.g., frequency and amplitude) associated with haptic effects, as taught by Ramsay. APPLE-1003, [199]. Particularly, the resulting system stores the user-specified haptic effects to be selected and used in generating desired haptic feedback. *Id.* Ramsay modifies Gregorio's haptically-enabled system to embed "[s]oftware and systems" "according to the teachings [of Ramsay], to lead a user through the process of entering and/or modify parameters and characteristics of haptic tracks." APPLE-1006, [0015]; APPLE-1003, [199]. Particularly, Gregorio-Ramsay's memory device (e.g., Gregorio's memory device or Ramsay's memory) stores "a software program for enabling an end user to create and/or modify haptic effects, the software program of which can be executed by processor," and "also store[s] haptic track files created or modified by the user and [] also store[s] mixed track files, which include multiple haptic tracks combined together." APPLE-1006, [0025]-[0028]; APPLE-1003, [199]. Further, the resulting system allows users to "access[] programmable haptic design software 30 via GUI 24 and open[] a file to be edited," and to "interact with programmable haptic design software 30 by input and output mechanisms of GUI," as taught by Ramsay. APPLE-1006, [0037];

APPLE-1003, [199].

The reasons (e.g., enabling users to customize haptic effects and combine haptic effects with multiple amplitudes and frequencies for "fuller haptic experience") discussed for Wakuda-Ramsay (§IV.A.3) would have similarly motivated a POSITA to modify Gregorio's system to be user-configurable as described in Ramsay. APPLE-1003, [200]-[203].

Further, a POSITA would have had a reasonable expectation of success in making the proposed modifications given that Gregorio and Ramsay describe the same techniques for controlling a linear actuator to produce desired output. APPLE-1003, [204]; APPLE-1004, 2:3-9; APPLE-1006, [0026]. Gregorio-Ramsay requires only routine knowledge of software implementation techniques, which were well within the POSITA's skill. APPLE-1003, [204]-[205]. Indeed, Gregorio and Ramsay, assigned to the same company, share similar structures and operations that are compatible. *Id.* Further, a POSITA would have recognized that Gregorio's and Ramsay's purposes (e.g., providing haptic feedback) are compatible, and Gregorio-Ramsay would have accomplished those in a similar way that each of Gregorio-Wakuda and Ramsay achieves. *Id.* Therefore, combining Gregorio and Ramsay was merely the application of known techniques (Ramsay's software solution for user's customization of haptic effects) to a known device (Gregorio's haptically-enabled system) ready for improvement to yield

predictable results (benefits articulated above). *KSR*, 550 U.S. 417.

(b) Gregorio-Ramsay-Wakuda

In the predictable combination, Gregorio-Ramsay's LRA would have been implemented based on Wakuda's "vibration generating means" structure. APPLE-1003, [206]. The modified LRA would have operated in a manner described in Wakuda, similar to Gregorio's operation. *Id.*; APPLE-1005, 5:51-6:10; APPLE-1004, 3:17-28. In the resulting system, Gregorio-Ramsay's system including "casing 25," "coil 28," "magnet/mass 27," and "spring 26" is implemented according to Wakuda's teachings of "cylindrical-shaped casing 2," "coil 5," "movable body 6," and "energizing members 9," respectively. APPLE-1003, [206]; APPLE-1004, 3:12-28, Figure 2; APPLE-1005, 4:33-5:64, Figure 1B.

Several reasons would have motivated a POSITA to implement Gregorio-Ramsay's haptic feedback system, particularly its LRA, according to Wakuda's vibration generator system, particularly its vibration generator means. APPLE-1003, [207]. Because Gregorio's description of the main components of the LRA (Figure 2) is only at a high level, a POSITA would have naturally looked to other references like Wakuda for implementation details. *Id.* Wakuda provides an implementation of the components of a linear vibration generator system that are similar to those of Gregorio's LRA, and the operations are also similar based on the magnetic fields of the coil and the magnet. *Id.*; APPLE-1004, 3:12-28, Figure

2; APPLE-1005, 4:33-5:64, Figure 1B.

A POSITA would have readily recognized that the resulting system maintains Gregorio's benefits in implementing Gregorio's system based on Wakuda's similar teachings. APPLE-1003, [208]. Indeed, Gregorio contemplates its system as "a handheld device, such as a cellular telephone, PDA, computer tablet." APPLE-1004, 3:1-2. Wakuda's vibration generating means are "mountable on small-sized information terminal devices, such as portable telephones, PDA." APPLE-1005, 1:11-14. Therefore, a POSITA would have readily recognized that Gregorio-Ramsay's system directly benefits from Wakuda's teachings and would have been naturally motivated for the combination. APPLE-1003, [208]-[209].

This evidence is consistent with the law, which confirms that a POSITA would have been prompted to combine Gregorio-Ramsay and Wakuda when doing so was the application of known techniques (Wakuda's vibration generator) to a known system (Gregorio-Ramsay's similar haptic feedback system) ready for improvement to yield predictable results (benefits articulated above). *KSR*, 550 U.S. at 417. A POSITA would have had a reasonable expectation of success in making the proposed modifications based on the similarity of Gregorio-Ramsay's and Wakuda's system architectures. APPLE-1003, [210]-[211]. Gregorio-Ramsay-Wakuda does not change the hallmark aspects of either reference because

the combination would modify Gregorio-Ramsay's actuator only to the extent that it is necessary to implement Wakuda's actuator, and Gregorio-Ramsay's techniques would otherwise remain unchanged and perform intended operations (e.g., monitoring a resonant frequency and adjusting the haptic feedback accordingly). *Id.*

3. Analysis

[1pre]

Gregorio-Ramsay-Wakuda provides a linear vibration module, such as the combination of the "haptic feedback system" including "processor 12," "actuator drive circuit 16," "LRA [Linear Resonant Actuator] 18," and "memory 20" and the "user interface" including "touch sensitive surface 11" and "mechanical keys/buttons 13," as taught by Gregorio. APPLE-1003, [212]-[214]; APPLE-1004, 2:10-20.

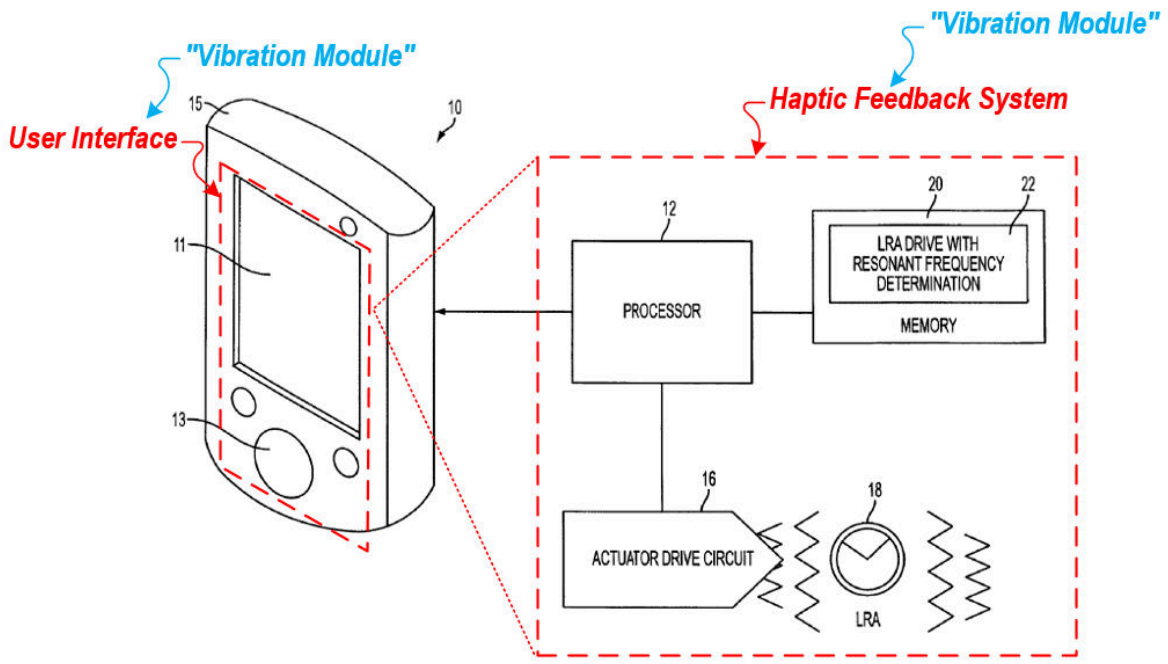

APPLE-1004, Figure 1

[1a]

Gregorio-Ramsay-Wakuda's vibration module includes a housing ("casing 25"), as taught by Gregorio. APPLE-1004, 3:13-15, Figure 2; APPLE-1003, [215]-[216].

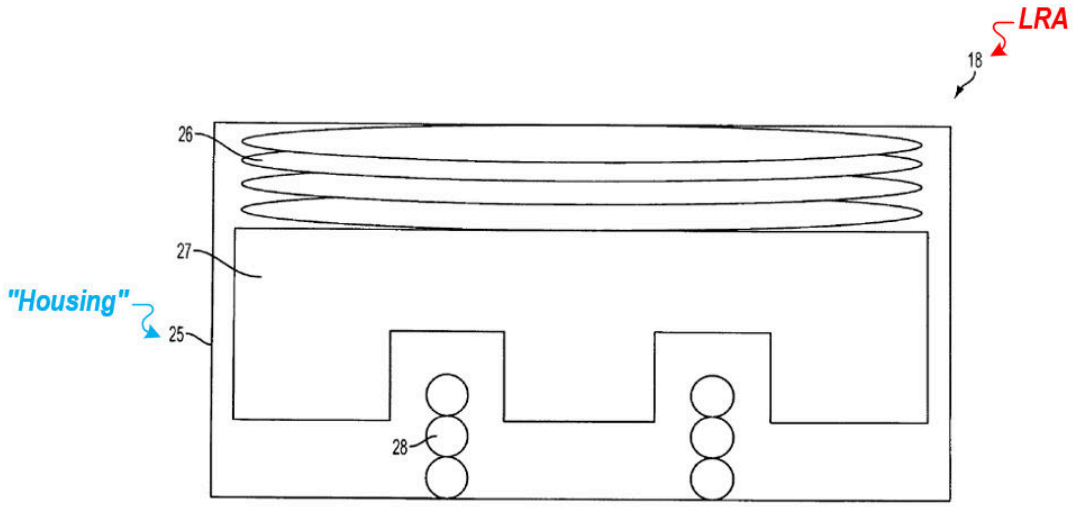

APPLE-1004, Figure 2

[1b]

Gregorio-Ramsay-Wakuda's vibration module includes a moveable component ("magnet/mass 27"), as taught by Gregorio. APPLE-1004, 3:12-14; APPLE-1003, [217]. Like the movable component in the '337 patent, magnet/mass 27 can be pushed or pulled by the interaction between the magnetic field of the magnet 27 and the magnetic field around the coil 28. APPLE-1004, 3:17-21.

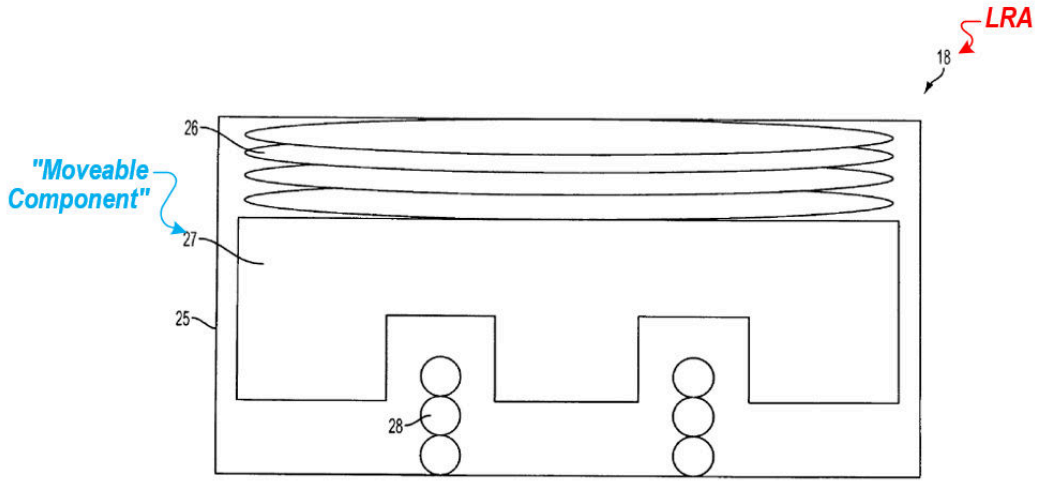

APPLE-1004, Figure 2

[1c]

Gregorio-Ramsay-Wakuda's vibration module includes a power supply ("actuator drive circuit 16"), "which includes electronic components and circuitry used to supply LRA 18 with the required electrical current and voltage to cause the desired haptic effects," as taught by Gregorio. APPLE-1004, 2:18-20-39, 3:17-20;

APPLE-1003, [218]. Because electric power is defined by current and voltage, a POSITA would have understood that actuator drive circuit 16 corresponds to, or is coupled to, a power supply. APPLE-1003, [218]; APPLE-1038, 1-2. Gregorio also describes "current generator 422" as a power supply to convert a pulse to current that flows into LRA 18. *Id.*, 5:49-53; APPLE-1003, [219]-[220] (citing APPLE-1007).

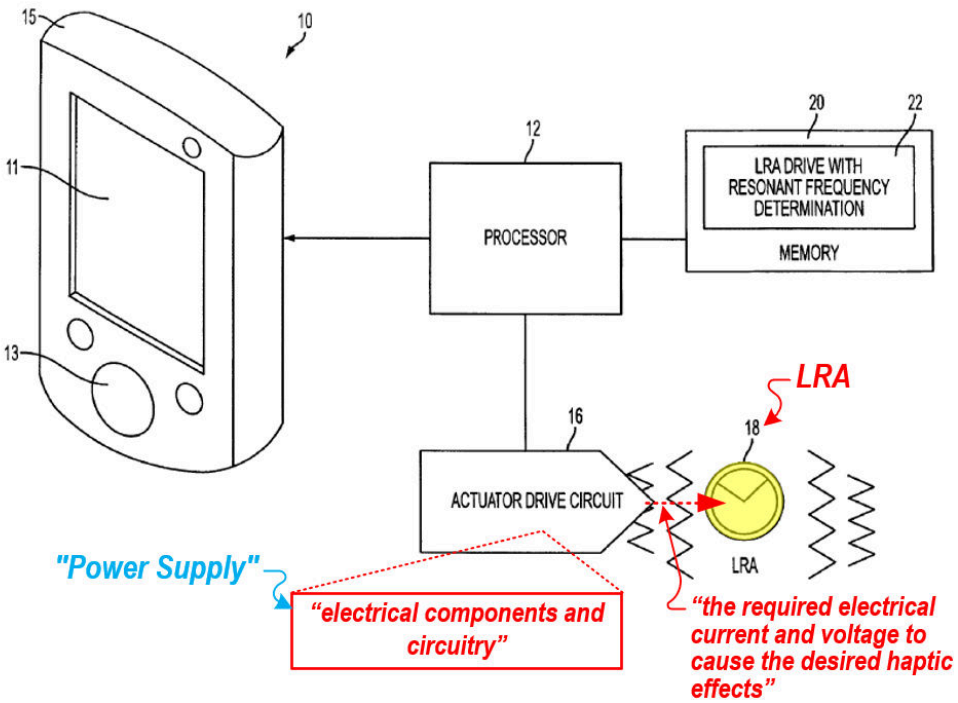

APPLE-1004, Figure 1

[1d]

Gregorio-Ramsay-Wakuda's vibration module includes user-input features ("touch sensitive surface 11" that "generates and displays images for the user to interact with, such as keys, dials, etc." and/or "mechanical keys/buttons 13"), as

taught by Gregorio. APPLE-1004, 2:10-14, 2:64-67; APPLE-1003, [221].

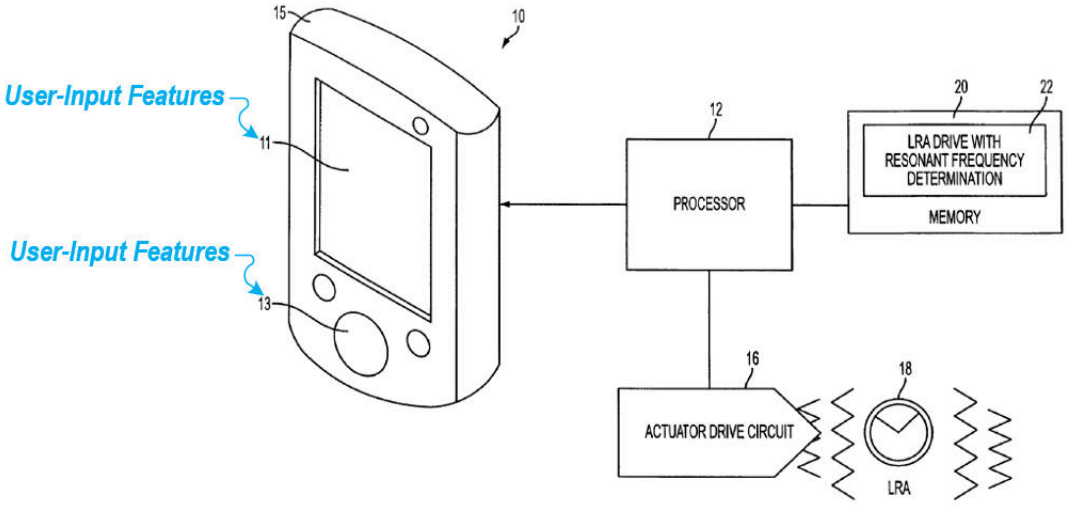

APPLE-1004, Figure 1

Further, Gregorio-Ramsay-Wakuda's user input features further include "input/output device" and "graphical user interface (GUI)" providing a menu option, as taught by Ramsay. APPLE-1003, [222]; APPLE-1006, [0024], [0032], [0053], [0015].

[1e]

Gregorio-Ramsay-Wakuda's vibration module includes a driving component ("electric coil") that drives the moveable component ("movement/oscillation of magnet") to oscillate within the housing ("casing") "when current flows thru coil 28 [and] a magnetic field forms around coil 28," as taught by Gregorio. APPLE-1004, 3:12-28, 2:10-20; APPLE-1003, [223]-[224].

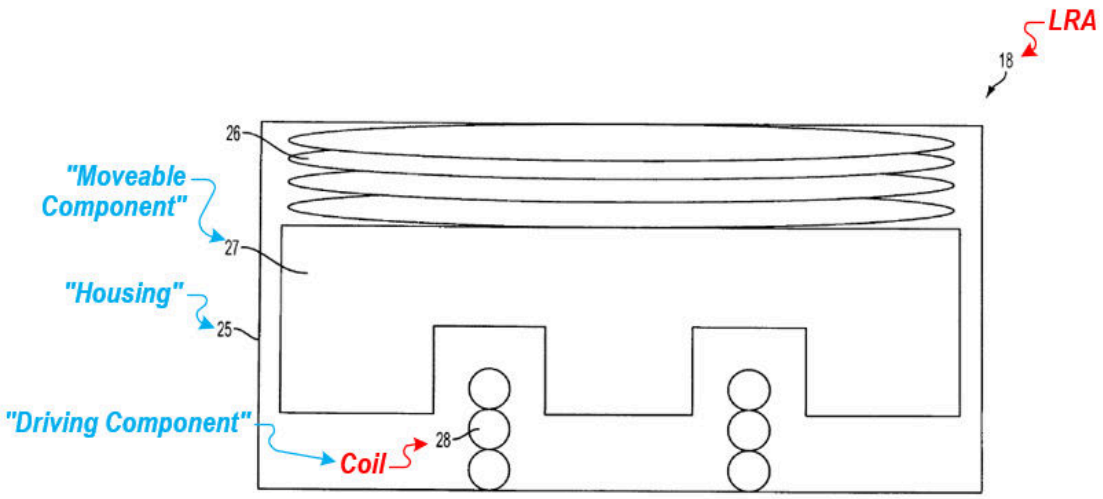

APPLE-1004, Figure 2

[1f]

Gregorio-Ramsay-Wakuda's vibration module includes a control component (combination of "processor," "memory," and either "LRA Drive with Resonant Frequency Determination module" or circuit 400) that controls the supply of power from the power supply ("actuator drive circuit") to the driving component ("coil") to cause the moveable component ("movement/oscillation of magnet") to oscillate at a frequency (high-level frequency, assumed resonance frequency, or determined resonance frequency) and an amplitude (high level "magnitude," "desired amplitude," or "present amplitude") specified by user input received from the user-input features (Gregorio-Ramsay's on-device user interface allowing the user to separately input frequency and amplitude). APPLE-1006, [0005], [0015]; APPLE-1003, [225]-[231].

Gregorio's "processor 12," coupled to "memory 20," controls "actuator

drive circuit 16" to provide desired haptic effects via LRA 18. APPLE-1004, 2:18-20. In providing the haptic effects, the processor controls supply of power from the power supply to the driving component. APPLE-1003, [226]. According to the control signals from the processor, the "electronic components and circuitry" of the actuator drive circuit 16 (power supply) supplies the "required electrical current and voltage" (power) to the coil 28 (driving component) of LRA 18, thereby causing the magnet 27 (moveable component) to oscillate. *Id.*; APPLE-1004, 2:36-39, 3:12-28.

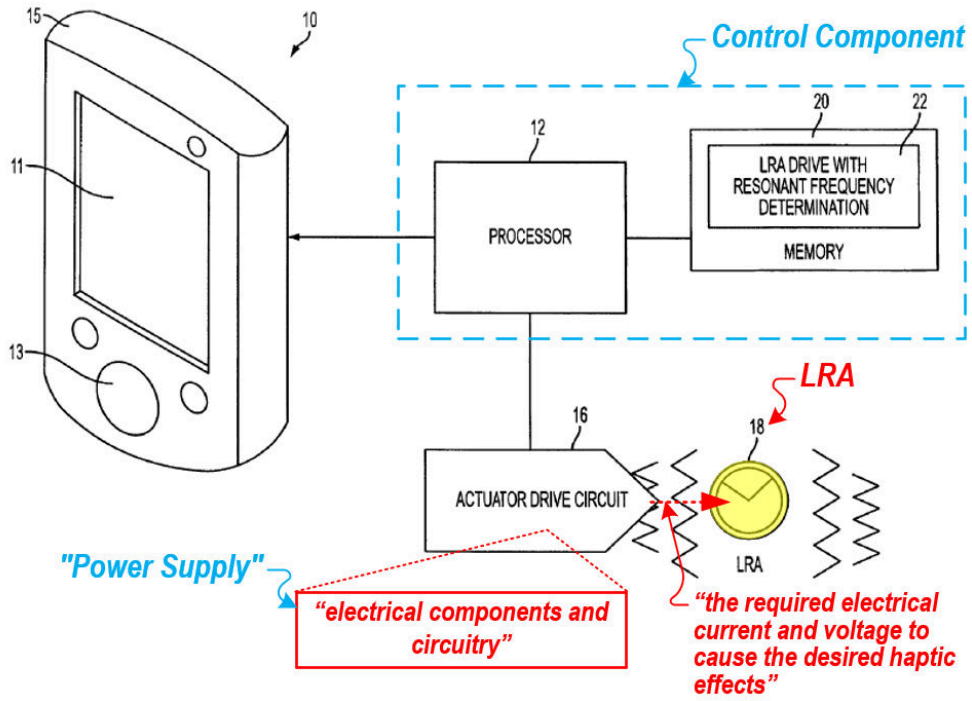

APPLE-1004, Figure 1

In Gregorio, "[m]emory 20 stores instructions executed by processor 12 … include[ing] an LRA Drive with Resonant Frequency Determination module 22

which are instructions that, when executed by processor 12, generate drive signals for LRA 18." APPLE-1004, 2:44-50, 4:28-31. These instructions include the assumed resonant frequency, the "desired amplitude," and the "present amplitude," which are stored in memory at least when "the desired amplitude is compared to the present amplitude." APPLE-1004, 4:20-22, 4:49-65; APPLE-1003, [227].

In Gregorio-Ramsay-Wakuda, those high-level frequency and amplitude parameters are specified by user input received from the user-input features (Gregorio-Ramsay's on-device user interface that allows the user to separately input frequency and amplitude). APPLE-1003, [231]; APPLE-1006, [0005], [0015]. Particularly, the Gregorio-Ramsay-Wakuda vibration module includes "on-device" GUI with a menu option, as taught by Ramsay. APPLE-1006, [0015], [0024], [0032], [0053]; APPLE-1003, [231]. Through Ramsay's GUI, "[c]ertain parameters or characteristics of a haptic output or haptic track can be created, entered, changed, modified, etc." and such "modifiable parameters may include a frequency of vibration and amplitude of vibration." APPLE-1006, [0030], [0033], [0046], [0053]-[0055]. Therefore, in the resulting system, the user can set and modify various parameters including "a frequency of vibration and amplitude of vibration" through GUI, as taught by Ramsay. APPLE-1003, [231].

[1g]

The Gregorio-Ramsay-Wakuda vibration module includes the flux paths, as

taught by Wakuda. APPLE-1003, [232]. Because of the similarity in implementing Gregorio-Ramsay-Wakuda (Ground 3A) and Wakuda-Ramsay (Ground 1) based on Wakuda's teachings of flux paths, the analysis of Ground 1 ([1g]) based on Wakuda and supporting evidence similarly applies for Gregorio-Ramsay-Wakuda. APPLE-1003, [232]-[242].

[2pre]-[2f], [4pre]-[4e]

Supra, [1pre]-[1f]; APPLE-1003, [243], [247].

[2g]

Gregorio-Ramsay-Wakuda renders obvious that the control component ([2f]) causes the moveable component to simultaneously oscillate at multiple frequencies to thereby generate complex vibration modes, as taught by Ramsay and Wakuda. APPLE-1003, [244]-[245]; §IV.A.4 (Ground 1, [2g]) (describing Ramsay and Wakuda render obvious the same limitations).

Notably, Gregorio-Ramsay-Wakuda's disclosure satisfies Patent Owner's means-plus-function construction of "control component" in claim 2 alleged in co-pending litigation. APPLE-1003, [246]; APPLE-1046, 12. Gregorio describes that "[p]rocessor 12 may be any type of general purpose processor, or could be a processor specifically designed to provide haptic effects, such as an application-specific integrated circuit ('ASIC')." APPLE-1004, 2:20-23, 4:31-36. Ramsay provides a similar disclosure. APPLE-1006, [0025], [0043]; §IV.A.4 ([2g]);

APPLE-1003, [246].

[4f]

As discussed in [1f] above, Gregorio-Ramsay-Wakuda's control component controls supply of power from the power supply to the driving component to cause the moveable component to oscillate at a frequency and an amplitude specified by user input received from the user-input features. APPLE-1003, [248]. In Gregorio-Ramsay-Wakuda, such frequency and amplitude parameters are independently specified by user input received from the user-input features. *Id.* Particularly, Gregorio-Ramsay-Wakuda enables a user to independently enter and modify "a frequency of vibration and amplitude of vibration" through "on-device" GUI. [1f]; APPLE-1006, [0015], [0024], [0030]-[0033], [0046], [0053]-[0055]; APPLE-1003, [249]. Indeed, the resulting system "enables user to modify such features as the … magnitude," and "[i]n addition, ... enables the user to enter one or more frequencies for the haptic track." *Id.*, [0046], [0054]; APPLE-1003, [249].

D. GROUND 3B: Gregorio-Ramsay-Tierling Renders Obvious Claims 2, 3, and 4 (Plain-and-Ordinary Meaning and Patent Owner's Means-Plus-Function Construction)

1. Tierling

Tierling provides "mapping drive signals to haptic sensations" at user interface devices, such as wireless phone. APPLE-1008, [0002]-[0003]; APPLE-1003, [71]-[73]. Tierling's "[e]ffect mappings ... can alter or control effect

components or parameters of a haptic sensation, such as amplitude, waveshape, frequency, phase, duration, or delay of the haptic feedback to be output by a haptic device." *Id.*, [0031]. Such effect parameters can be controlled "by way of synthesis or other combination" and "output simultaneously or in sequence." *Id.* "In cases where haptic feedback components are synthesized, the frequency of a first component can be modulated by the frequency of a second component." *Id.*

In one implementation, Tierling's system operates at both "a desired output frequency and a resonant frequency of a haptic device," which are superimposed on each other. APPLE-1008, [0110]-[0112], Figures 9-10. Therefore, Tierling's harmonic haptic device can be driven "without losing the low-frequency components." *Id.*

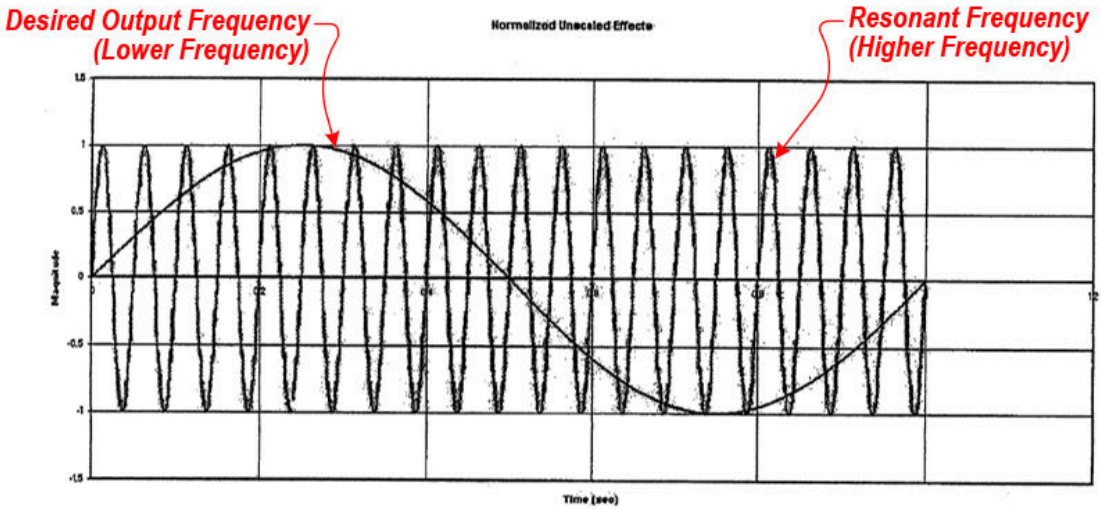

APPLE-1008, Figure 9

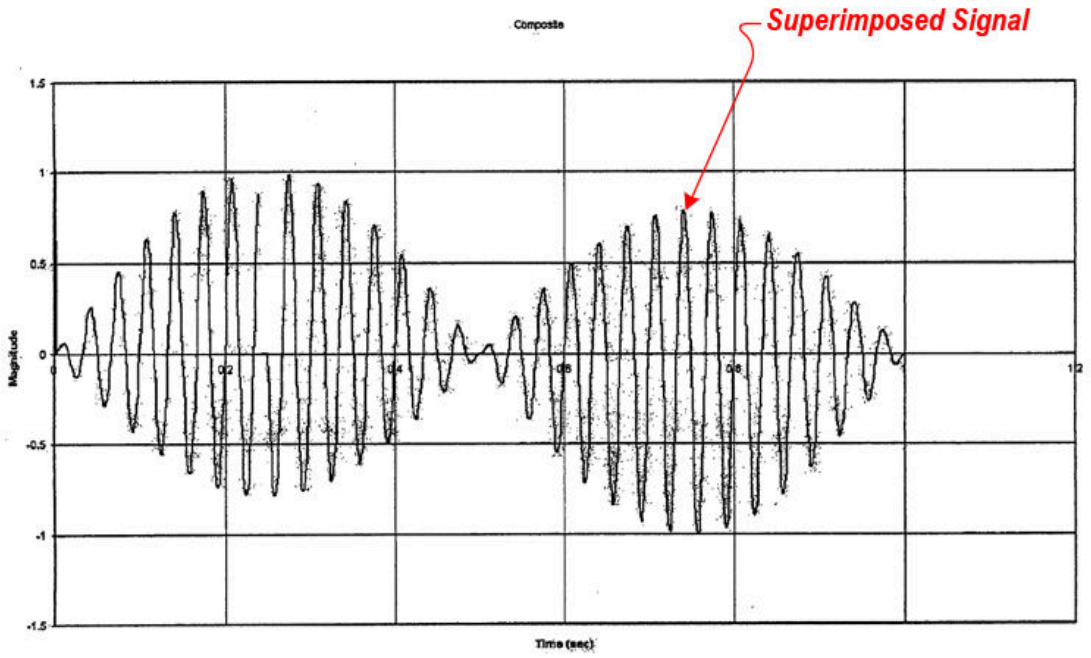

APPLE-1008, Figure 10

2. Gregorio-Ramsay-Tierling

In the predictable combination, Gregorio-Ramsay's system plays Tierling's haptic effects using Tierling's effect mapping functionalities. APPLE-1003, [250]. A POSITA would have been motivated to play Tierling's haptic effects using Gregorio-Ramsay's system because Gregorio-Ramsay refers to haptic effects, which are based on the resonance frequency and high-level parameters such as magnitude, frequency, duration, but provides no specific examples of a desired haptic effect. *Id.* Accordingly, a POSITA would have naturally investigated other references like Tierling (from the same assignee as Gregorio's and Ramsay's) for examples of desired haptic effects that are based on the resonance frequency and high-level parameters. *Id.*; APPLE-1008, [0031].

The resulting system would have benefited from Tierling's effect mapping technique, which "can drive a harmonic haptic device," like Gregorio's LRA, "without losing the low-frequency components" "by multiplying the low frequency desired output sinusoidal waveform with the higher frequency resonant mode waveform." APPLE-1008, [0110], [0030]-[0031]; APPLE-1003, [251] (citing APPLE-1017).

Gregorio-Ramsay-Tierling was the application of a known technique (Tierling's effect mapping) to a known system (Gregorio-Ramsay's haptic feedback system) ready for improvement to yield predictable results (benefits articulated above). *KSR*, 550 U.S. at 417. A POSITA would have appreciated that Gregorio-Ramsay-Tierling does not change the relevant features of either reference. APPLE-1003, [252].

A POSITA would have had a reasonable expectation of success in making these modifications based on the structural similarity in Gregorio-Ramsay and Tierling (owned by the same company) and because the modifications would have been implemented largely through incorporating software instructions for executing Tierling's functionalities. APPLE-1003, [253]. Furthermore, the combination modifies Gregorio-Ramsay's system only to the extent that it is necessary to implement the software functionalities of Tierling, and Gregorio-Ramsay's system otherwise remains unchanged and performs its intended

operations. *Id.*

3. Analysis

[2pre]-[2f], [4pre]-[4f]

Supra, Ground 3A, [2pre]-[2f], [4pre]-[4f] (explaining the same limitations are taught by Gregorio-Ramsay); APPLE-1003, [254], [262].

[2g]

Gregorio-Ramsay-Tierling's control component (Gregorio-Ramsay's control component modified to include Tierling's effect mapping functionality) drives simultaneous oscillation of the movable component (Gregorio-Ramsay's magnet/mass) at two or more frequencies (the resonance frequency and a frequency lower than the resonant frequency) to generate complex vibration modes (shown below). APPLE-1003, [255].

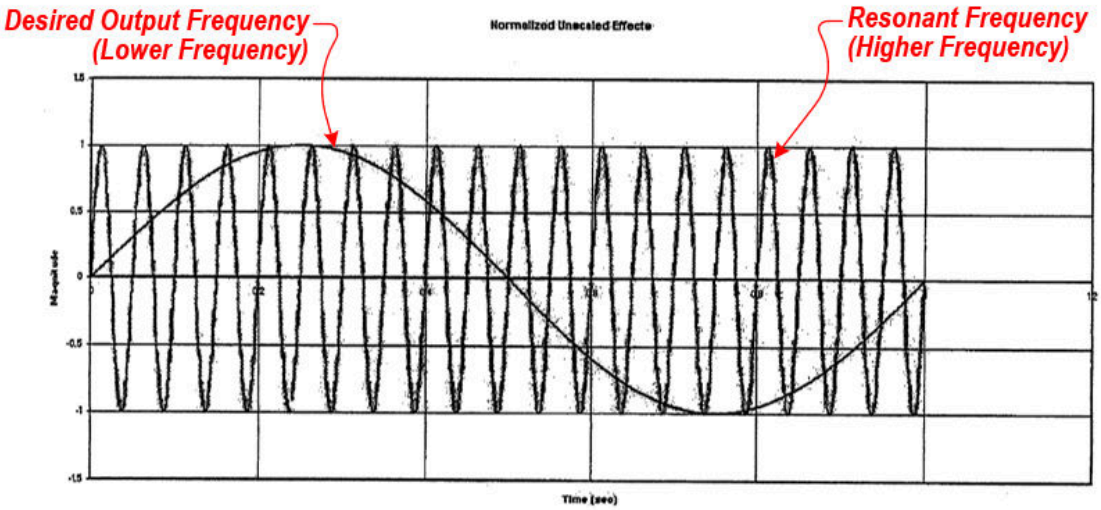

APPLE-1008, Figure 9

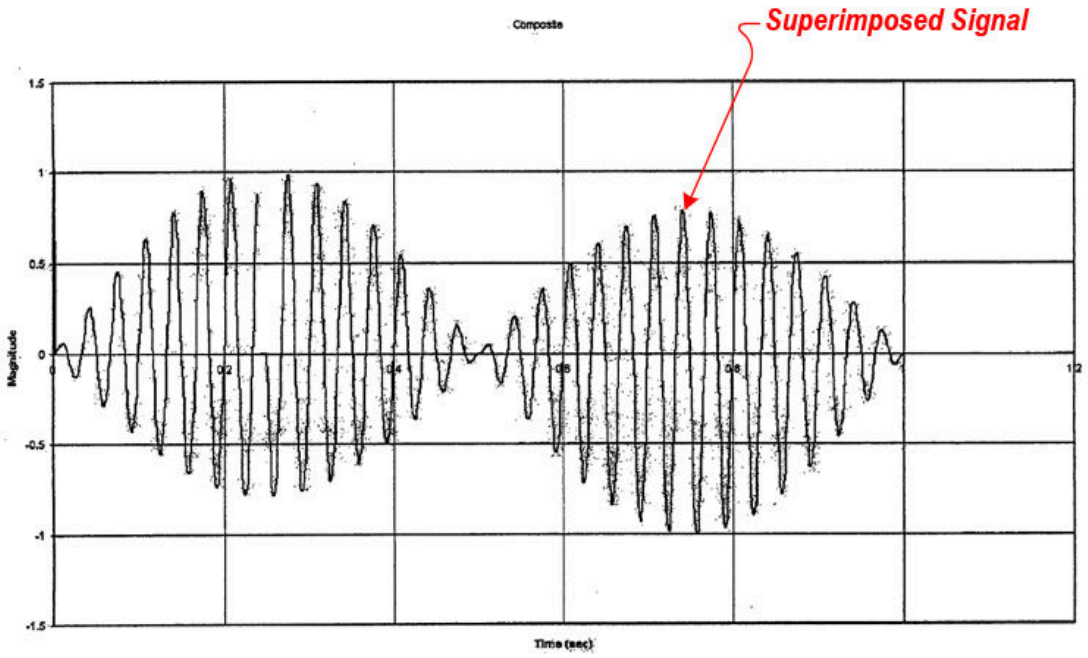

APPLE-1008, Figure 10

Tierling describes "a desired output sinusoidal response having a frequency of approximately 1 Hz <u>superimposed</u> on a higher frequency resonant mode of a harmonic haptic device." APPLE-1008, [0108] ("multiplying the low-frequency desired output sinusoidal waveform with the higher frequency resonant mode waveform ... in real-time"), [0031]; APPLE-1003, [256].

Notably, Tierling's superimposed signal matches the '337 patent's "complex vibrational mode in which two driving frequencies combine to produce a lower-frequency beat-wave form," as illustrated in Figures 22B-23. APPLE-1001, 13:14-41; APPLE-1003, [257].

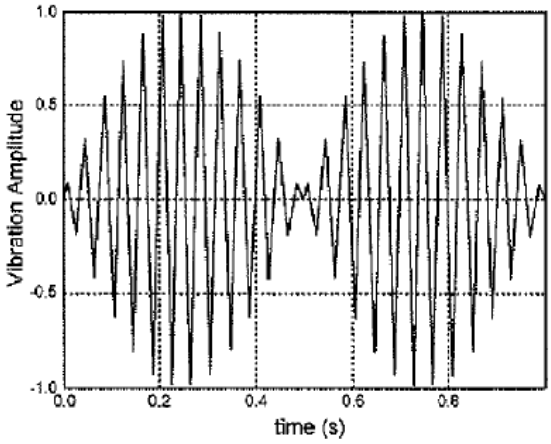

APPLE-1001, Figure 22B

[3]

Gregorio-Ramsay-Tierling's complex vibration modes include a primary oscillation frequency (the resonance frequency) modulated by a modulating oscillation frequency (a lower desired frequency in [2]); a beat frequency (the difference between the resonance frequency and the lower desired frequency); and an aperiodic oscillation waveform (the waveform having illustrated an irregular amplitude as illustrated in Tierling's Figure 10). APPLE-1003, [258].

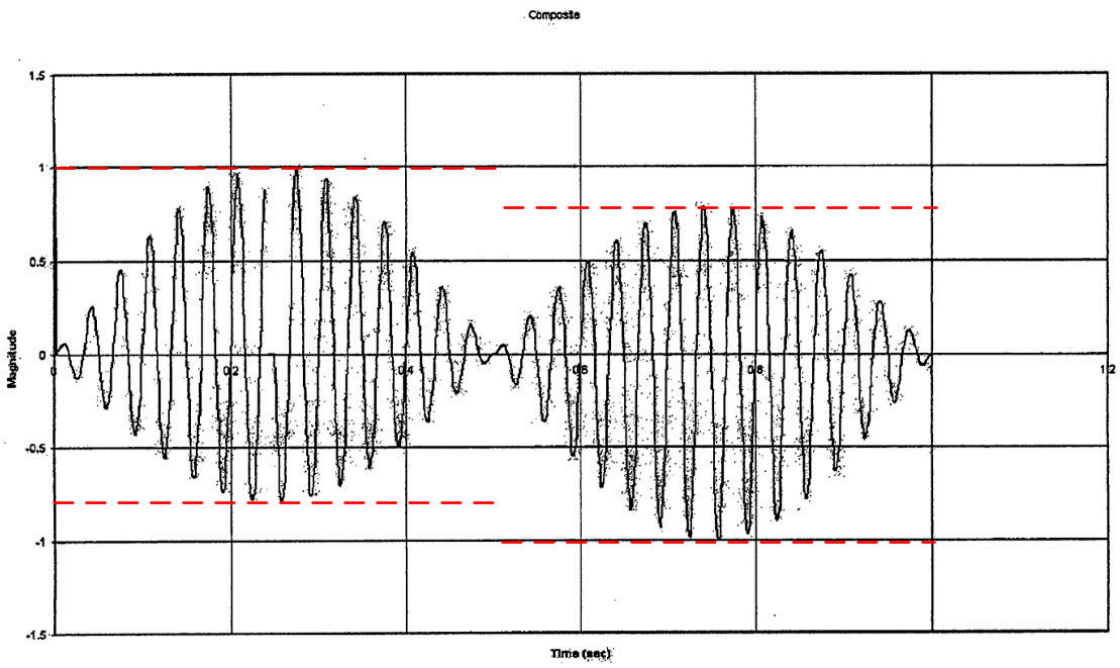

APPLE-1008, Figure 10

As discussed in [2g] above, "the frequency of a first component [a higher resonance frequency] can be modulated by the frequency of a second component [a lower, desired frequency]." APPLE-1008, [0031], [0110]-[0112] ("frequency domain envelope modulation"); Figures 9-10. As in the '337 patent, the difference between the higher resonance frequency and the lower, desired frequency is the beat frequency. APPLE-1003, [259] (comparing APPLE-1008, Figure 10, [0110]-[0112] with APPLE-1001, 13:29-31, Figure 23).

Further, as shown in Figure 10 above, the amplitude of the beat frequency (indicated by red dashed lines) is irregular and therefore aperiodic. APPLE-1003, [259]-[260]. Additionally, Tierling's effect mapper uses three different

transformation matrices—(1) "an initiation transformation matrix" to provide "initiation transformed effect instructions, such as a lead-in effect," (2) "a sustaining transformation matrix that transforms the incoming effect instructions 502 into transformed effect instructions," providing "the middle portion of each of the transformed effect instructions," and (3) "a termination transformation matrix that transforms the effect instructions into termination transformed effect instructions," providing "such termination effects as a braking pulse, or the like." APPLE-1008, [0096]-[0098]. A POSITA would have readily understood that Tierling's three different transformation matrices were designed to provide different haptic effects during each cycle (based on different amplitudes and frequencies, etc.), thereby generating an aperiodic oscillation waveform. APPLE-1003, [260].

It also would have been obvious to use Gregorio-Ramsay's system to generate complex vibration modes that include additional aperiodic waveforms wherein the resonance frequency changes irregularly over time. APPLE-1003, [261]. It was well-known that the resonant frequency of an actuator can change depending on various factors, such as a user's interaction with a haptic-enabled device. *Id.* (citing APPLE-1004, 3:50-4:5, 2:5-9). As a result, it would have been obvious to vary the resonant frequency of Gregorio-Ramsay-Tierling's complex vibration mode when, for example, the user aperiodically changes the position of

the device, how the device is held, and/or the shape of the device. APPLE-1003, [261]. The resulting waveform would have been an aperiodic waveform because the resonance frequency would change irregularly. *Id*.

E. GROUND 4A: Gregorio-Ramsay-Wakuda-Rossi-Aldrich Renders Obvious Claims 1, 2, and 4 (Both Parties' Means-Plus-Function Constructions)

1. Gregorio-Ramsay-Wakuda-Rossi-Aldrich

(a) Gregorio-Ramsay-Wakuda-Rossi

Similar to Wakuda-Ramsay-Rossi (§IV.B.3.(a)), Gregorio-Ramsay-Wakuda's actuator system includes a switch (e.g., H-bridge switch circuit) having a control signal input, splitter and control signal inverter, in accordance with Rossi, that receives the control signal from the processor, in accordance with Gregorio-Ramsay-Wakuda's feedback control. APPLE-1003, [263]-[265]. Such a configuration would have yielded the predictable result of oscillating the actuator's magnet by switching the polarity of drive signals generated based on Gregorio-Ramsay-Wakuda closed-loop concepts for feedback control. *Id.* Indeed, Gregorio describes applying current through the coil in opposite directions to "push[] or pull[] on magnet." APPLE-1004, 3:17-21. Further, an H-bridge switch was a well-known example circuit to implement a change in "current flow direction/polarity" for "push" and "pull" actions in a system, like Gregorio-Ramsay-Wakuda's. APPLE-1003, [266]; APPLE-1023, 7:47-50 ("well-known H-

bridge circuit"). Although Gregorio-Ramsay-Wakuda does not explicitly describe complete implementation details of a switching circuit, prior art systems such as Rossi demonstrated the conventional knowledge of implementing such a circuit to provide oscillating power. APPLE-1003, [267]-[268]; APPLE-1020, 1:65-2:11, 3:43-55, Figures 4, 6.

Given the similarity between Gregorio-Ramsay-Wakuda (§IV.C.2) and Wakuda-Ramsay (§IV.A.3), the reasons discussed for Wakuda-Ramsay-Rossi (§IV.C.3.(a)) would have similarly motivated a POSITA to modify Gregorio-Ramsay-Wakuda's system based on Rossi's teachings of switch. APPLE-1003, [269]-[271]. A POSITA would have recognized that combining Rossi and Gregorio-Ramsay-Wakuda was the application of known techniques (Rossi's H-bridge circuit implementation) to a known device (Gregorio-Ramsay-Wakuda's system that switches polarity of current) ready for improvement to yield predictable results (benefits articulated above). *KSR*, 550 U.S. at 417. A POSITA would have had a reasonable expectation of success in making the proposed modifications based on the similarity of the function of the H-Bridge switch circuit in Rossi and Gregorio-Ramsay-Wakuda, and because the modifications would have been implemented largely through routine circuit design considerations and software instructions for generating the control signal. APPLE-1003, [272].

(b) Gregorio-Ramsay-Wakuda-Rossi-Aldrich

Similar to Wakuda-Ramsay-Rossi-Aldrich (§IV.B.3.(b)), Aldrich's control algorithm is implemented in Gregorio-Ramsay-Wakuda-Rossi's system that utilizes sensor feedback to control vibration output about a resonant frequency. APPLE-1003, [273]. In the combined system, sensor outputs would be processed using Aldrich's control algorithm techniques, which replace Gregorio's operation based on "monitoring period." *Id.*; APPLE-1004, 4:22-28, 5:53-55; *Intel Corporation v. PACT XPP Schweiz AG*, 61 F.4th 1373, 1381 (Fed. Cir. March 13, 2023) (reversing Board and finding that Petitioner "just had to show that [secondary reference's feature] was a 'suitable option' to replace [primary reference's feature]," and not that it was an "'improvement' in the categorical sense"). For example, to generate control signals that maintain oscillation at/near resonance, the drive frequency would be incremented or decremented, and a currently measured vibration strength parameter, such as the measured "LRA vibration amplitude" (APPLE-1004 at 4:42-48), would be compared with a previously measured vibration strength parameter. APPLE-1003, [273]; APPLE-1021, 2. Given the similarity in implementing Gregorio-Ramsay-Wakuda-Rossi (§IV.E.1.(a)) and Wakuda-Ramsay-Rossi (§IV.B.3.(a)) based on Aldrich's "hill-climbing" control, the analysis of modifying Wakuda-Ramsay-Rossi based on Aldrich (§IV.B.3(b)) similarly applies for combining Gregorio-Ramsay-Wakuda-Rossi with Aldrich. APPLE-1003, [274]-[284].

Although Gregorio already describes a technique of monitoring sensor outputs to determine a resonant frequency and adjusting the control signal to maintain oscillation at/near resonance (APPLE-1004, 3:65-5:55), Gregorio's technique introduces a "monitoring period (approximately 10%) of the drive cycle," during which "drive circuit 16 'listens' or monitors and receives magnetic back EMF (i.e., the voltage generated by the internal motion inside LRA 18) from LRA 18." APPLE-1004, 4:22-28. During the monitoring period, a drive pulse is not applied to the actuator. *Id.*; *see also* 5:53-55. Therefore, a POSITA would have readily recognized that the monitoring period would create a period as part of the drive cycle where a user receives no or reduced haptic feedback depending on the duration of the period. APPLE-1003, [280]-[281]. Further, a POSITA would have understood that Gregorio's monitoring period would only receive weak EMF signals of the moving mass because the movement of the mass significantly decreases in amplitude during the monitoring period. *Id.*; APPLE-1004, 5:63-65. Understanding these shortcomings and attempting to improve Gregorio-Ramsay-Wakuda-Rossi's monitoring/adjusting method in an alternative way, a POSITA would have looked to other teachings like Aldrich for such details, especially where Aldrich explicitly describes driving an actuator at/near resonance using such control algorithm techniques. APPLE-1003, [281]; APPLE-1021, 1-3.

A POSITA would have had a reasonable expectation of success in making the proposed modifications based on the applicability of Aldrich's method to the resonant system architectures in Gregorio-Ramsay-Wakuda-Rossi, and because the modifications would be largely implemented via software executed by the microprocessor. APPLE-1003, [284].

2. Analysis

[1pre]-[1e], [1g], [2pre]-[2e], [4pre]-[4e]

Supra, Ground 3A, [1pre]-[1e], [1g], [2pre]-[2e], [4pre]-[4e] (explaining the same limitations based on Gregorio-Ramsay-Wakuda); APPLE-1003, [285]-[287], [322]-[323], [328].

[1f], [2f]-[2g], [4f]

Under the means-plus-function construction (§II.C.1), Gregorio-Ramsay-Wakuda-Rossi-Aldrich's vibration module includes the recited control component. As shown in [1pre], the resulting system includes "processor" coupled to memory, as in Gregorio's "haptic feedback system." Ground 3A; APPLE-1004, 2:18-21; APPLE-1003, [288].

Given the similarity between Gregorio-Ramsay-Wakuda-Rossi-Aldrich's system (§IV.E.1.(b)) and Wakuda-Ramsay-Rossi-Aldrich's system (§IV.B.3.(b)), the analysis of Ground 2 ([1f], [2f]-[2g], [4f]) based on Rossi, Aldrich, and supporting evidence similarly applies for Gregorio-Ramsay-Wakuda-Rossi-

Aldrich. APPLE-1003, [289]-[321], [324]-[327], [329].

F. GROUND 4B: Gregorio-Ramsay-Tierling-Rossi-Aldrich Renders Obvious Claims 2, 3, and 4 (Both Parties' Means-Plus-Function Constructions)

Except for the means-plus-function construction discussed in Ground 4A, Ground 4B is substantially the same as Ground 3B. APPLE-1003, [330]-[331].

Additionally, under the means-plus-function construction, Gregorio-Ramsay-Tierling-Rossi-Aldrich provides the additional algorithm for "complex vibration modes" in claim 2, based on Tierling's teachings. APPLE-1003, [332]; Ground 3B ([2g]); APPLE-1008, [0108], [0031], Figures 9-10. Similarly, Gregorio-Ramsay-Tierling-Rossi-Aldrich covers Patent Owner's means-plus-function construction in claim 2 because Patent Owner's interpretation is broader than the '337 patent's algorithm. §II.C.1; Ground 4A ([2f]-[2g]); APPLE-1003, [332].

V. DISCRETIONARY CONSIDERATIONS

A. The *General Plastic* Factors Favor Institution—§314(a)

The '337 patent is currently being challenged in pre-instituted IPR2024-00569 filed by Sony Interactive Entertainment Inc. et al. ("Sony"). The instant petition is entirely distinct—it is being filed by an entirely separate party, and this petition uses completely different prior art, claim construction, and priority date treatment than were used in the earlier petitions by Samsung and Sony. *Compare*

IPR2024-00569, Paper 1, 8-11 *with* §II.B-C. For these reasons, the *General Plastic* factors favor institution. *General Plastic Industrial Co. v. Canon Kabushiki Kaisha*, IPR2016-01357, Paper 19, 16 (PTAB Sept. 6, 2017) (precedential as to section II.B.4.i).

1. Factors 1, 2, 4, and 5: Apple Never Petitioned This Patent

Apple is a separate company from Sony sued separately by Patent Owner in separate Courts. The Apple and Sony products Patent Owner accuses of infringing the '337 patent are not related to one another. Moreover, Apple and Sony did not cooperate in any way in preparing either the previously filed IPR2024-00569 or this petition. Unlike in *Valve I* and *II*, Apple is a wholly separate and unrelated entity from Sony, and the record is devoid of evidence that the companies share accused products—or even suppliers or components. *Valve Corp. v. Elec. Scripting Prods., Inc.*, No. IPR2019-00062, Paper 11, at 9-10 (PTAB Apr. 2, 2019) ("*Valve I*"); *Valve Corp. v. Elec. Scripting Prods., Inc.*, No. IPR2019-00064, Paper 10, at 10 (PTAB May 1, 2019) ("*Valve II*"). In fact, these facts are nearly opposite facts to those present in the Board's precedential Valve decision.

Because the evidence does not show a significant relationship between Apple and Sony, "*General Plastic* factors 1, 2, 4, and 5 weigh against discretionary denial." *Volkswagen Group of America, Inc. v. Neo Wireless LLC*, IPR2022-

01537, Paper 8 at 11 (PTAB May 5, 2023). Where, as here, "there is no indication of a significant relationship under *Valve* and factor 1 between Petitioner and the" prior petitioner, "Petitioner did not file a second petition following-on to a first petition under factors 2, 4, and 5." *Id.* "In other words, this is not a case where we need to address concerns that Petitioner is 'strategically stag[ing] [its] prior art and arguments in multiple petitions' in order to refine its positions based on lessons learned from Petitioner's filing of an earlier petition." *Id.* (citing *General Plastic*, Paper 19 at 17; *Code200, UAB v. Bright Data, Ltd.*, IPR2022- 00861, Paper 18 at 5 (PTAB Aug. 23, 2022) (precedential)).

While developing defenses against three other patents in the co-pending litigation (§VIII.B), Apple has independently uncovered at least Rossi and Aldrich, which supply non-cumulative evidence supporting strong motivation rationales with Wakuda, Gregorio and Ramsay under different claim constructions than Sony's.

Sony's petition in IPR2024-00569 was filed on February 16, 2024, less than two months before the instant petition is filed. During the pendency of Sony's petition, Petitioner was still vetting the prior art and worked diligently on refining Grounds 1-4 in the intervening months.

2. Factor 3: The Different Prior Art at Issue Between the Proceedings Ensures No Advantage Is Gained

No POPR has been filed in IPR2024-00569. As noted above, the prior art references relied upon in IPR2024-00569 are entirely distinct from the prior art references that form the basis for this Petition. Thus, knowledge of the arguments raised in the petition of IPR2024-00569 does not confer any advantage to Apple.

3. Factors 6 and 7: The Distinct Grounds and Lack of Significant Relationship Ensure the Board's Resources and Ability to Render a Decision Within the Statutory Timeframe Are Not Significantly Impacted

There are no common prior art references between this petition and IPR2024-00569. Moreover, because Apple and Sony share no significant relationship, the rights of Apple to pursue this petition will not in any way be impacted by the outcome of IPR2024-00569. Thus, any Final Written Decision in IPR2024-00569 is unlikely to have a significant impact on the merits or conduct of an instituted IPR from this petition. And while the Board will expend resources necessary to hear this alternative petition, the expenditure of those resources is justified by Apple's independent and distinct basis under §314 to file an IPR petition and the fees that Apple is paying to have this petition heard on the merits.

Furthermore, it's entirely possible for Patent Owner to settle with Sony and seek termination of IPR2024-00569 at any time during its pendency, after Apple's statutory bar date. Apple's basis under §314 to have the Board consider the patentability of the '337 patent should not be put in tension with and potentially

curtailed by Patent Owner and Sony's distinct right to settle their dispute outside of Apple's control.

B. The *Advanced Bionics* Test Favors Institution—§325(d)

Each of the Petition's references was not considered during prosecution and is not cumulative of the references considered. This Petition thus does not involve the same or substantially the same art or arguments previously presented, ending the *Advanced Bionics* inquiry in favor of institution. *Advanced Bionics, LLC v. MED-EL Elektromedizinische Geräte GmbH*, IPR2019-01469, Paper 6 at 8-9 (precedential).

C. The *Fintiv* Factors Favor Institution—§314(a)

This Petition's merits are compelling, and the evidence presented herein is substantial, counseling against discretionary denial under *Fintiv*.

Factor 1 is neutral or favors institution. Apple has requested a stay pending resolution of a Motion to Transfer to the Northern District of California. While the PTAB does not infer how the district court would rule should a stay be requested, the pending motion at least increases the likelihood of a stay. *Hulu LLC v. SITO Mobile R&D IP, LLC*, IPR2021-00298, Paper 11, 10-11 (May 19, 2021).

Factor 2 favors institution. The Board will likely issue its Final Written Decision around October/November 2025, within about two months of the currently-scheduled trial date (August 4, 2025) and likely before the media time-

to-trial in WDTX (October 2025, based on median time of 28.3 months). The currently-scheduled trial date is uncertain and subject to change due to a number of factors. Indeed, the case was recently transferred from the docket of Judge Counts to the docket of Judge Albright, with the impact on the schedule not yet resolved. Moreover, a Motion to Transfer to the Northern District of California, and a Motion to Stay while the transfer motion is considered, both remain pending. APPLE-1036.

Factor 3 favors institution because Petitioner has diligently filed this Petition nearly two months ahead of the one-year time bar, while the litigation remains in its early stages. By the anticipated institution deadline in October 2024, the co-pending litigation will still be in early stages—expert and fact discovery will be months away from concluding. *Id.* Moreover, a Motion to Transfer Venue is still pending. APPLE-1036.

Factors 4 and 5 are neutral. Resolution is expected around the time of a decision in the District Court, which mitigates against duplication of effort and serves efficiency and integrity goals. The same parties are in the co-pending litigation.

Factor 6 favors institution because this petition's merits are compelling for the reasons described herein, which demonstrates unpatentability of the claims based on multiple grounds and claim constructions.

VI. PAYMENT OF FEES

Petitioner authorizes the Office to charge any fees to Deposit Account No. 06-1050.

VII. CONCLUSION

Petitioner requests IPR and cancellation of the Challenged Claims.

VIII. MANDATORY NOTICES UNDER 37 C.F.R § 42.8(a)(1)

A. Real Party-In-Interest Under 37 C.F.R. § 42.8(b)(1)

Apple Inc. is the petitioner and real party-in-interest.

B. Related Matters Under 37 C.F.R. § 42.8(b)(2)

Petitioner is not aware of any disclaimers, reexamination certificates or petitions for inter partes review for the ’337 Patent. The ’337 Patent is the subject of *Resonant Systems, Inc. d/b/a Revel HMI v. Apple, Inc.*, 7-23-cv-00077 (WDTX) filed June 1, 2023. The ’337 Patent is the subject of *Resonant Systems, Inc. v. Samsung Electronics Co., Ltd. et al.* 2-22-cv-00423 (EDTX) filed October 26, 2022, *Resonant Systems, Inc. v. Sony Group Corporation (Japan) et al.* 2-22-cv-00424 (EDTX) filed October 26, 2022.

Samsung Electronics Co., Ltd. et al v. Resonant Systems, Inc. IPR2023-00993 (PTAB) filed June 14, 2023; *Samsung Electronics Co., Ltd. et al v. Resonant Systems, Inc.* IPR2023-01025 (PTAB) filed June 14, 2023.

C. Lead And Back-Up Counsel Under 37 C.F.R. § 42.8(b)(3)

Petitioner provides the following designation of counsel.

Lead Counsel	Backup counsel
W. Karl Renner, Reg. No. 41,265 Fish & Richardson P.C. 60 South Sixth Street Minneapolis, MN 55402 Tel: 202-783-5070 Fax: 877-769-7945 Email: IPR50095-0178IP1@fr.com	Thomas Rozylowicz, Reg. No. 50,620 Sangki Park, Reg. No. 77,261 Fish & Richardson P.C. 60 South Sixth Street Minneapolis, MN 55402 Tel: 202-783-5070 Fax: 877-769-7945 Email: IPR50095-0178IP1@fr.com

D. Service Information

Please address all correspondence and service to the address listed above.

Petitioner consents to electronic service by email at IPR50095-0178IP1@fr.com.

Respectfully submitted,

Dated: April 12, 2024

/Thomas A. Rozylowicz/
W. Karl Renner, Reg. No. 41,265
Thomas Rozylowicz, Reg. No. 50,620
Sangki Park, Reg. No. 77,261
Fish & Richardson P.C.
60 South Sixth Street
Minneapolis, MN 55402
T: 202-783-5070
F: 877-769-7945

(Control No. IPR2024-00807)

Attorneys for Petitioner

CERTIFICATION UNDER 37 CFR § 42.24

Under the provisions of 37 CFR § 42.24(d), the undersigned hereby certifies that the word count for the foregoing Petition for *Inter Partes* Review totals 13,994 words, which is less than the 14,000 allowed under 37 CFR § 42.24.

Dated: April 12, 2024

/Thomas A. Rozylowicz/

W. Karl Renner, Reg. No. 41,265
Thomas Rozylowicz, Reg. No. 50,620
Sangki Park, Reg. No. 77,261
Fish & Richardson P.C.
60 South Sixth Street
Minneapolis, MN 55402
T: 202-783-5070
F: 877-769-7945

(Control No. IPR2024-00807)

Attorneys for Petitioner

CERTIFICATE OF SERVICE

Pursuant to 37 CFR §§ 42.6(e)(4)(i) *et seq.* and 42.105(b), the undersigned certifies that on April 12, 2024, a complete and entire copy of this Petition for *Inter Partes* Review and all supporting exhibits were provided via Federal Express, to the Patent Owner by serving the correspondence address of record as follows:

WESTMAN CHAMPLIN & KOEHLER, P.A.
121 South Eighth Street
Suite 1100
Minneapolis, MN 55402
(612) 334-3222

/Crena Pacheco/

Crena Pacheco
Fish & Richardson P.C.
60 South Sixth Street
Minneapolis, MN 55402
pacheco@fr.com