US005809979A

United States Patent [19]

Tsuda et al.

[11] **Patent Number: 5,809,979**

[45] **Date of Patent: Sep. 22, 1998**

[54] **FUEL SUPPLYING DEVICE FOR ENGINE**

[75] Inventors: **Hiroyuki Tsuda**; **Kiyoharu Kimoto**; **Yoshio Shinno**, all of Sakai, Japan

[73] Assignee: **Kubota Corporation**, Osaka, Japan

[21] Appl. No.: **931,471**

[22] Filed: **Sep. 16, 1997**

[30] **Foreign Application Priority Data**

Feb. 10, 1997 [JP] Japan 9-026817

[51] **Int. Cl.**[6] **F02M 21/02**

[52] **U.S. Cl.** **123/525**; 48/144

[58] **Field of Search** ..... 123/525, 527; 48/144, 199 R

[56] **References Cited**

U.S. PATENT DOCUMENTS

3,539,313 11/1970 Phipps 48/144
4,111,176 9/1978 Fenton et al. ..... 123/198 DB
4,254,064 3/1981 Bernauer et al. ..... 261/64 E
5,527,367 6/1996 Harada 123/527

FOREIGN PATENT DOCUMENTS

7-103006 4/1995 Japan .

Primary Examiner—John T. Kwon
Attorney, Agent, or Firm—Bacon & Thomas, PLLC

[57] **ABSTRACT**

A fuel supplying device for an engine comprises a carburetor (**1**) having a mixing body (**2**) in which a venturi passage (**3**) is provided, a float chamber (**4**) being arranged in the mixing body (**2**), a liquid fuel nozzle (**5**) communicating with the float chamber (**4**), a liquid fuel nozzle outlet (**6**) facing the venturi passage (**3**). The mixing body (**2**) is provided with a gaseous fuel nozzle (**7**). The liquid fuel nozzle outlet (**6**) and a gaseous fuel nozzle outlet (**8**) are faced to the same venturi passage (**3**) so as to be able to supply the alternative of a liquid fuel or a gaseous fuel.

19 Claims, 8 Drawing Sheets

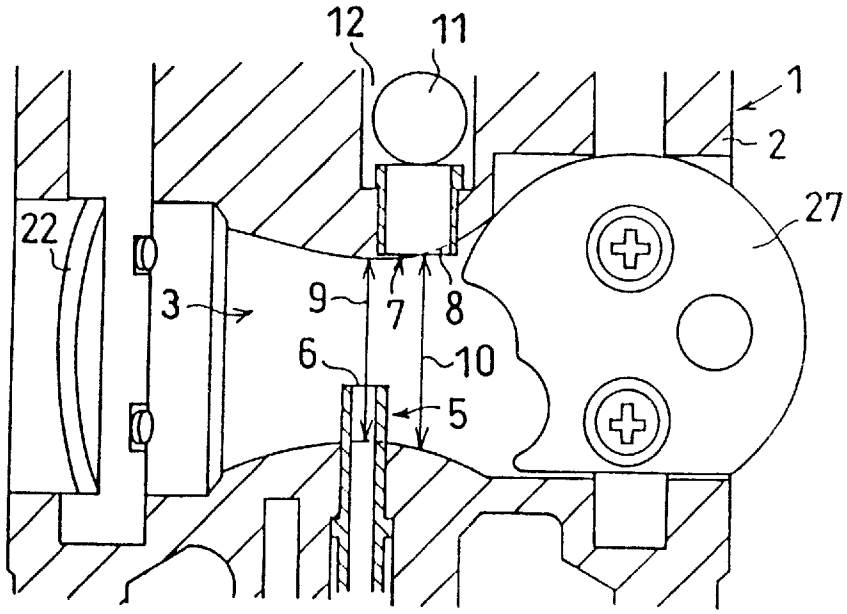

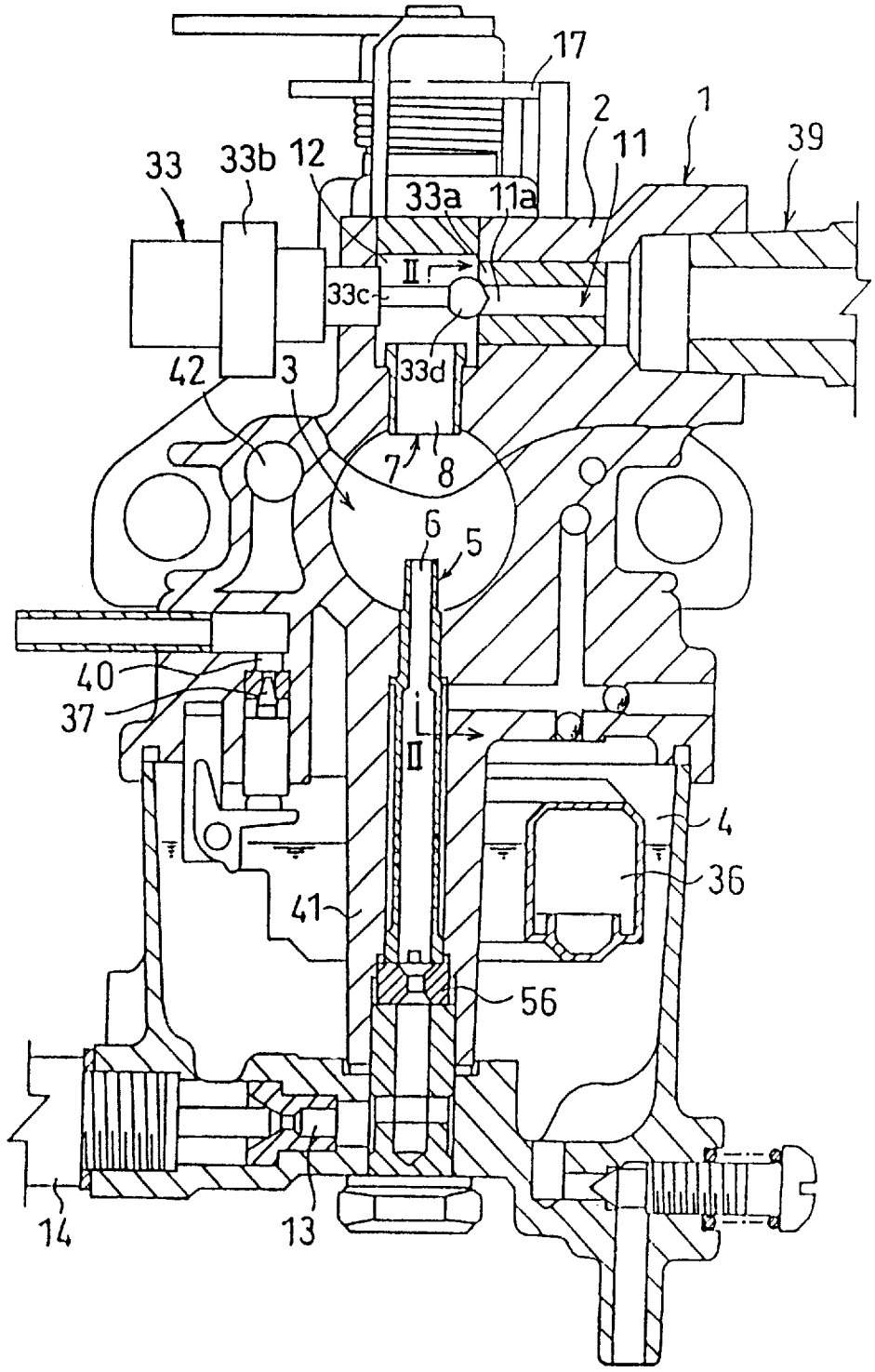
17
2
1
39
33
33b
12
11
33a
11a
II
33c
33d
42
3
7
8
6
5
40
37
II
4
36
41
56
14
13

FIG. 1

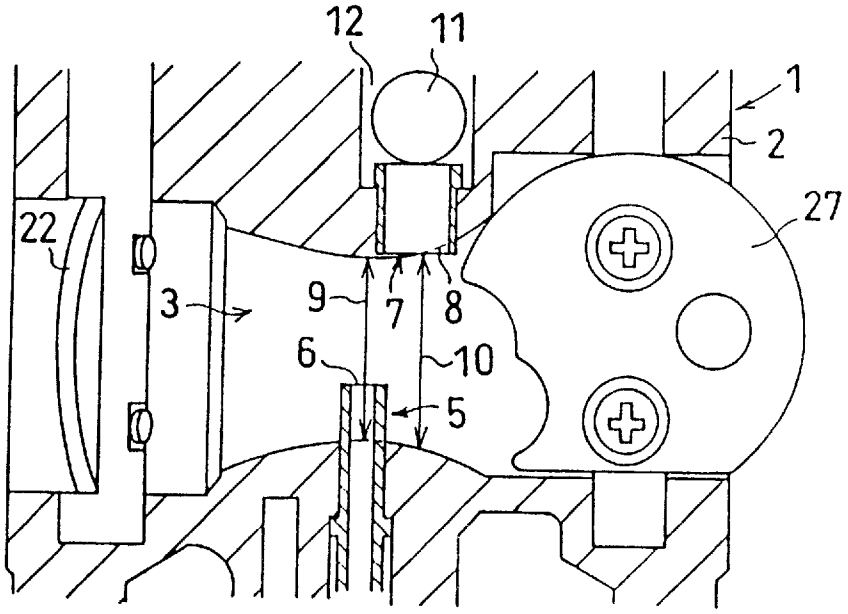

FIG. 2

FIG. 3

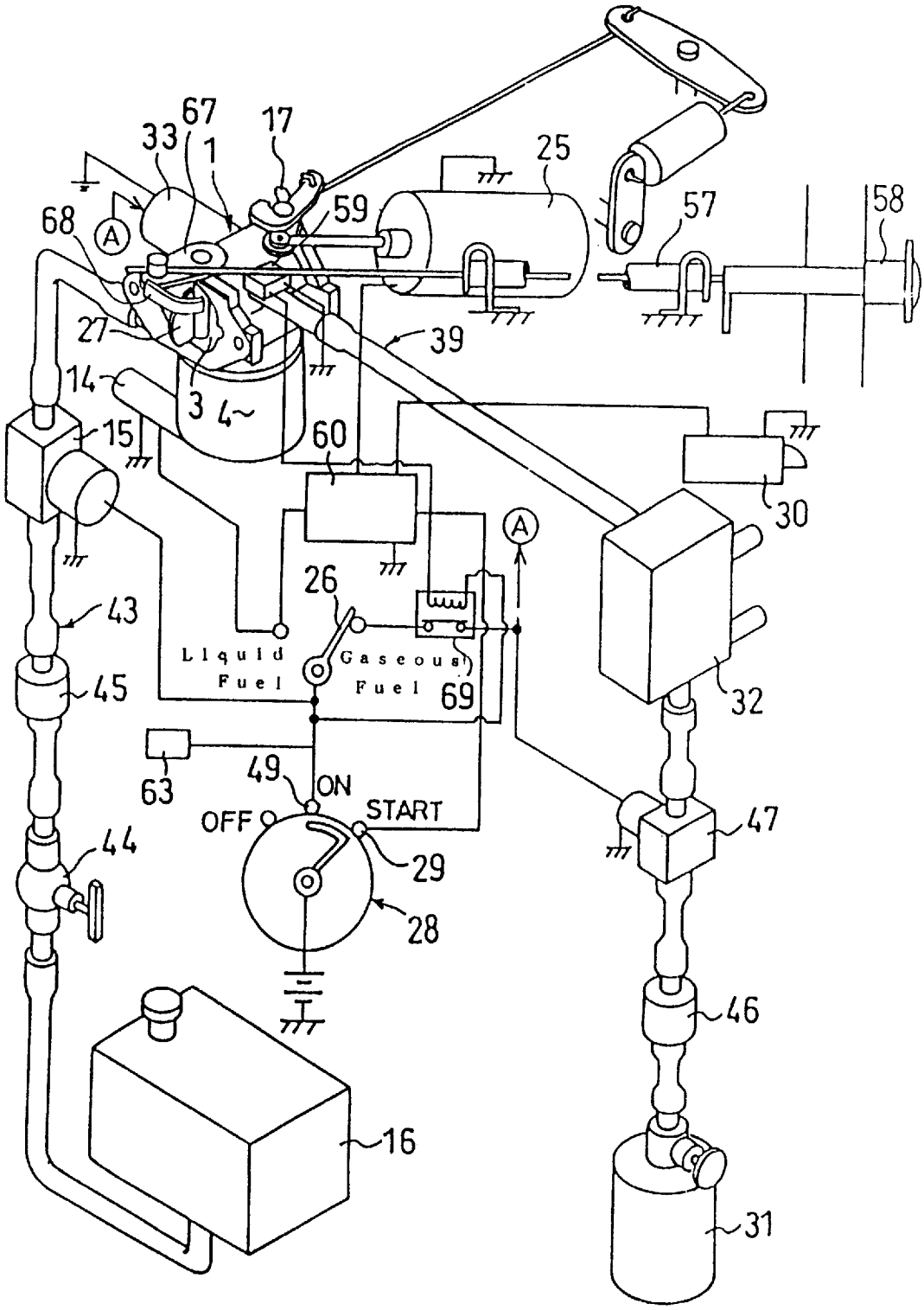
67
33
1
17
25
68
59
57
58
27
39
14
3
4
15
60
30
26
43
Liquid Fuel
Gaseous Fuel
69
45
32
63
49
ON
OFF
START
47
44
29
28
46
16
31

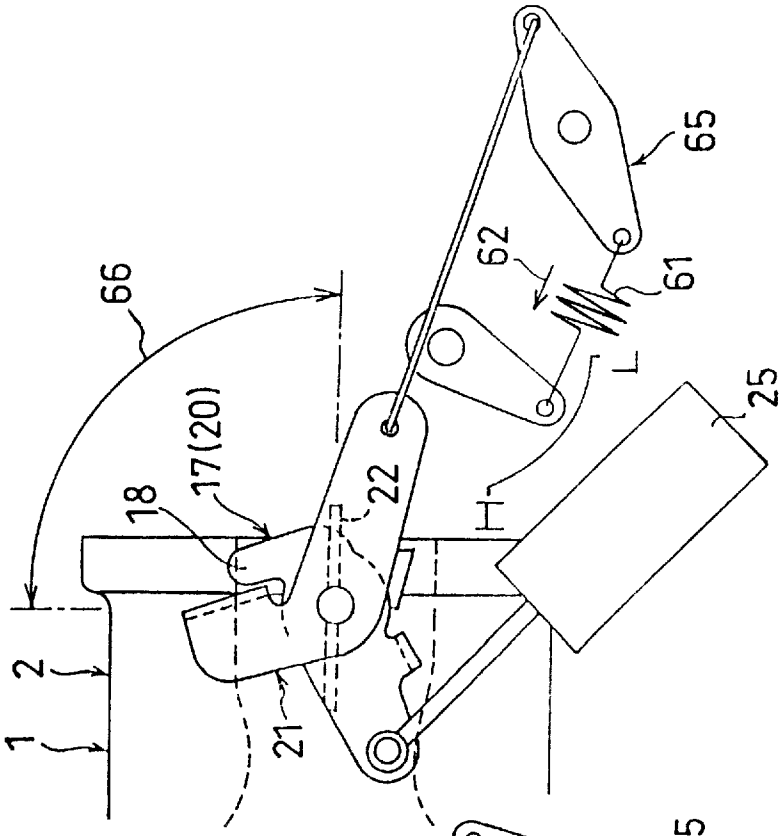
66
17(20)
18
22
21
1
2
65
62
61
L
H
25

FIG. 4(B)

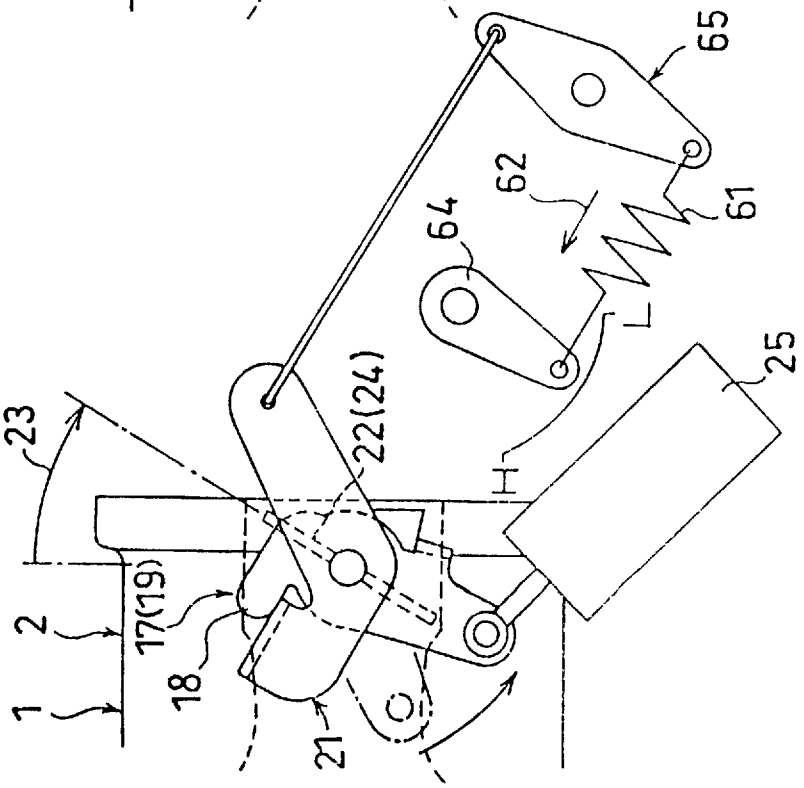
23
17(19)
18
22(24)
21
1
2
64
62
61
65
L
H
25

FIG. 4(A)

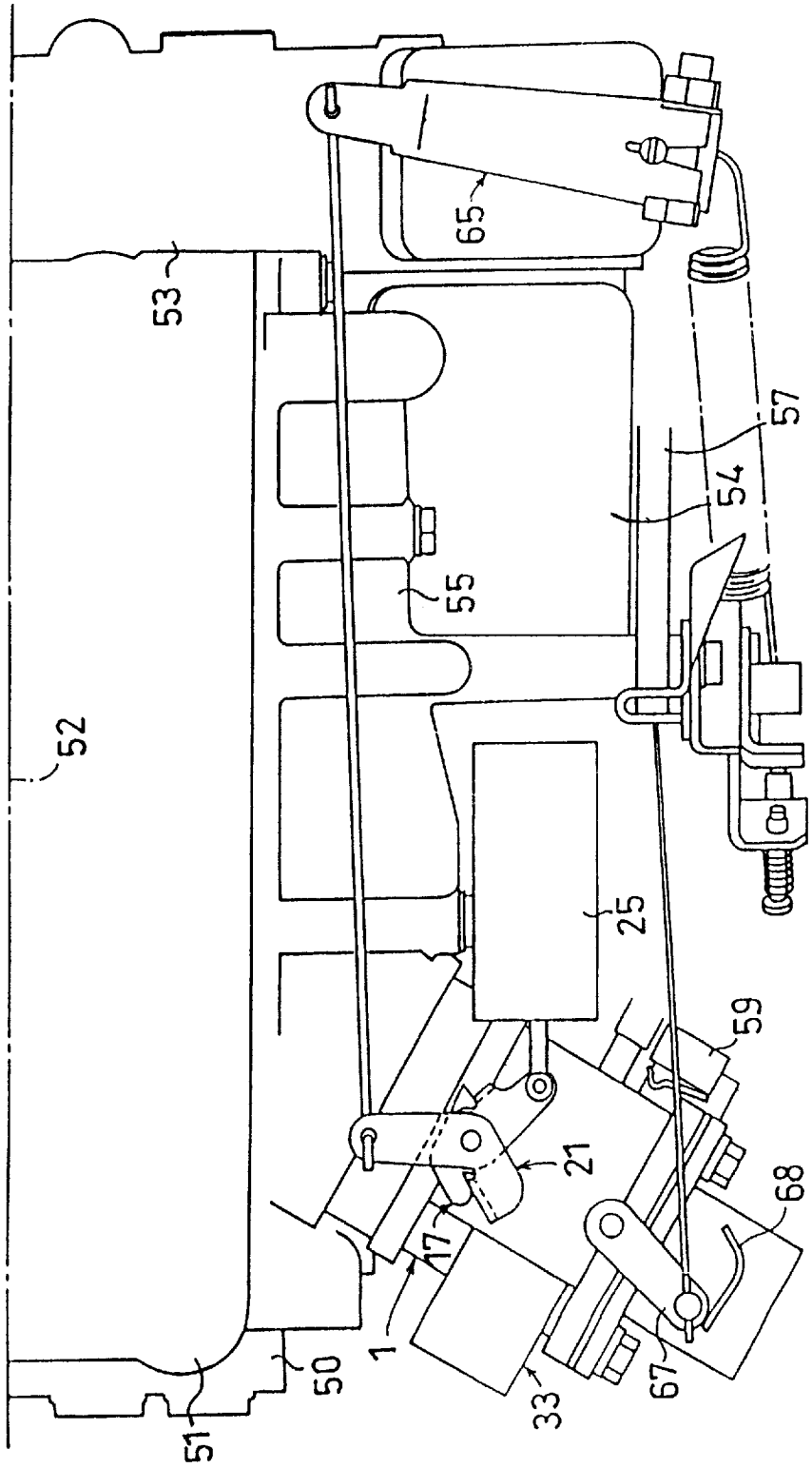

FIG. 5

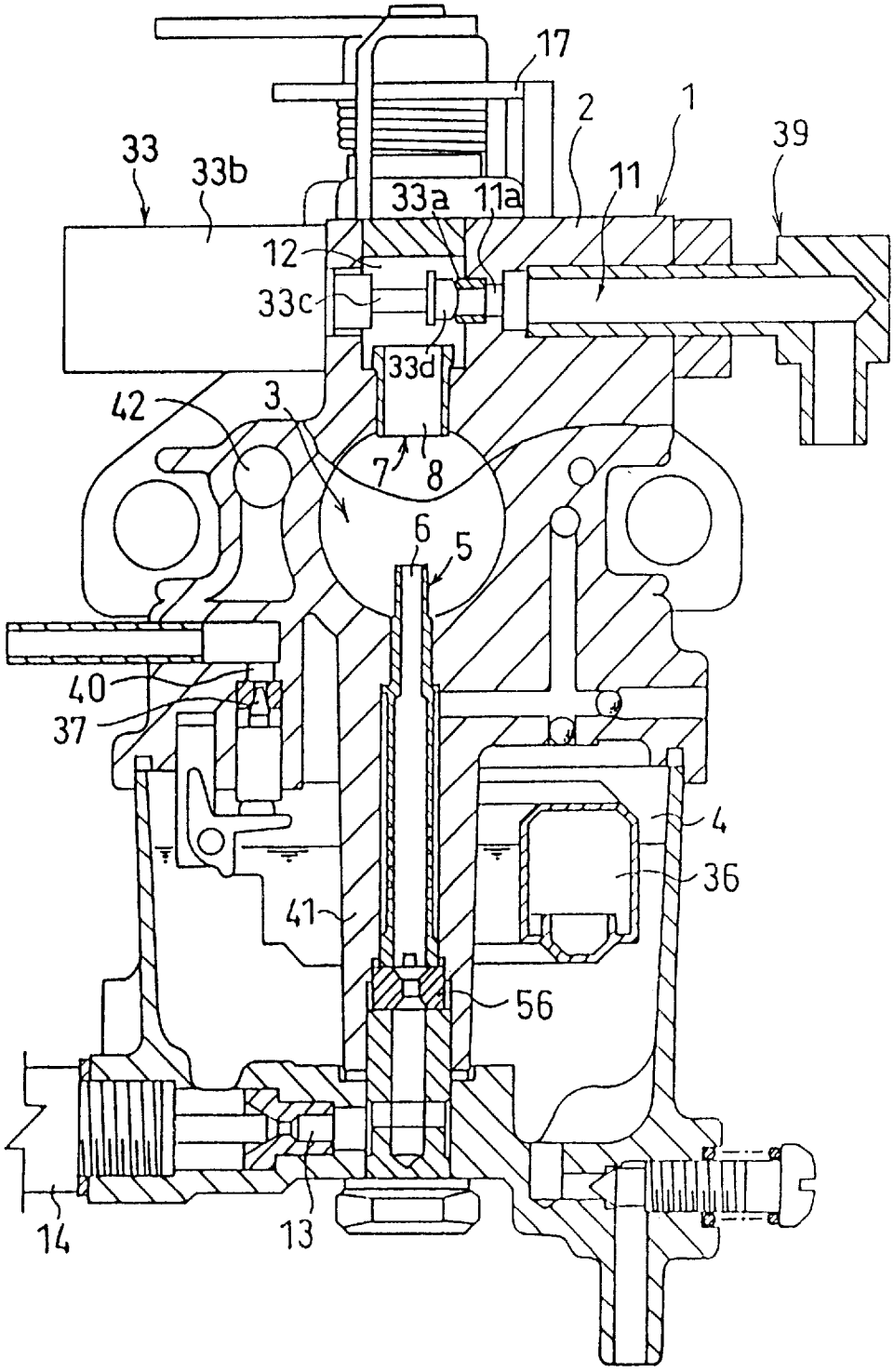

FIG. 6

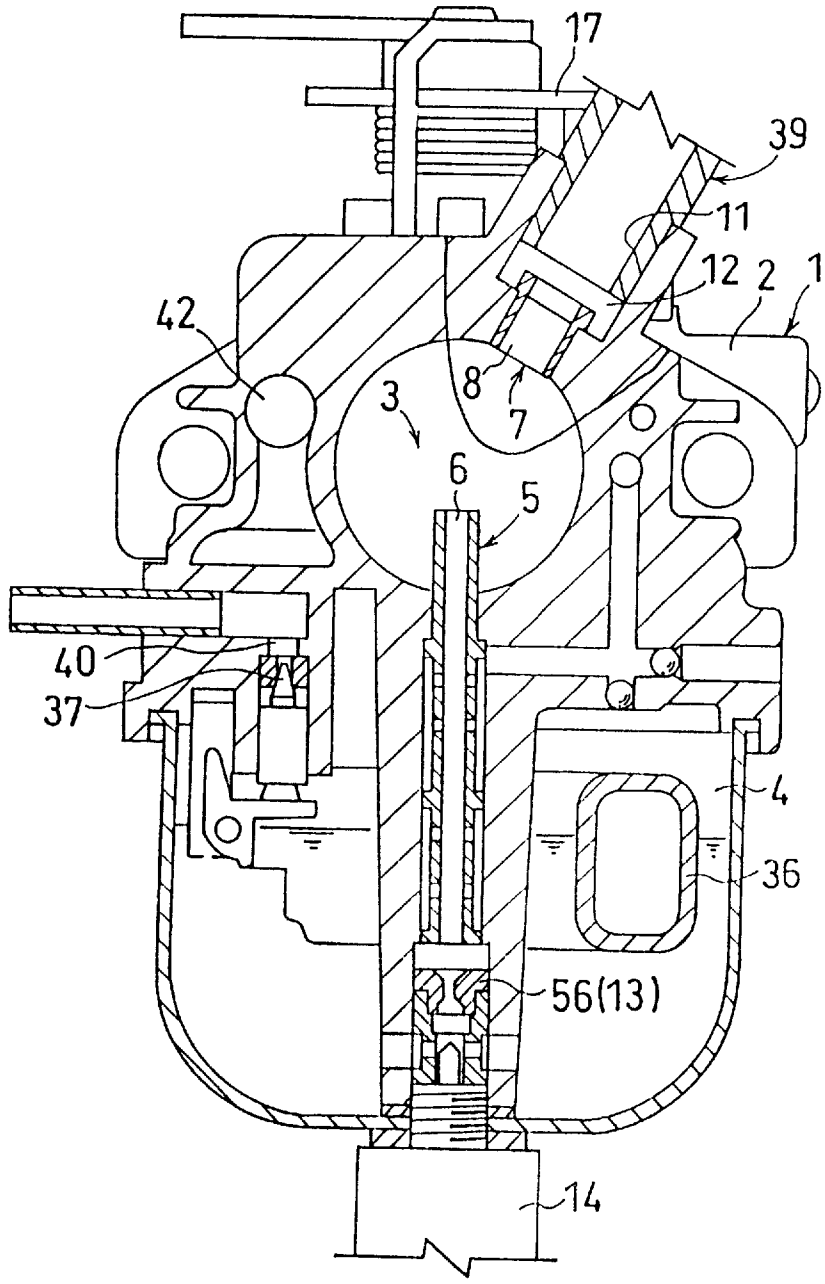

FIG. 7

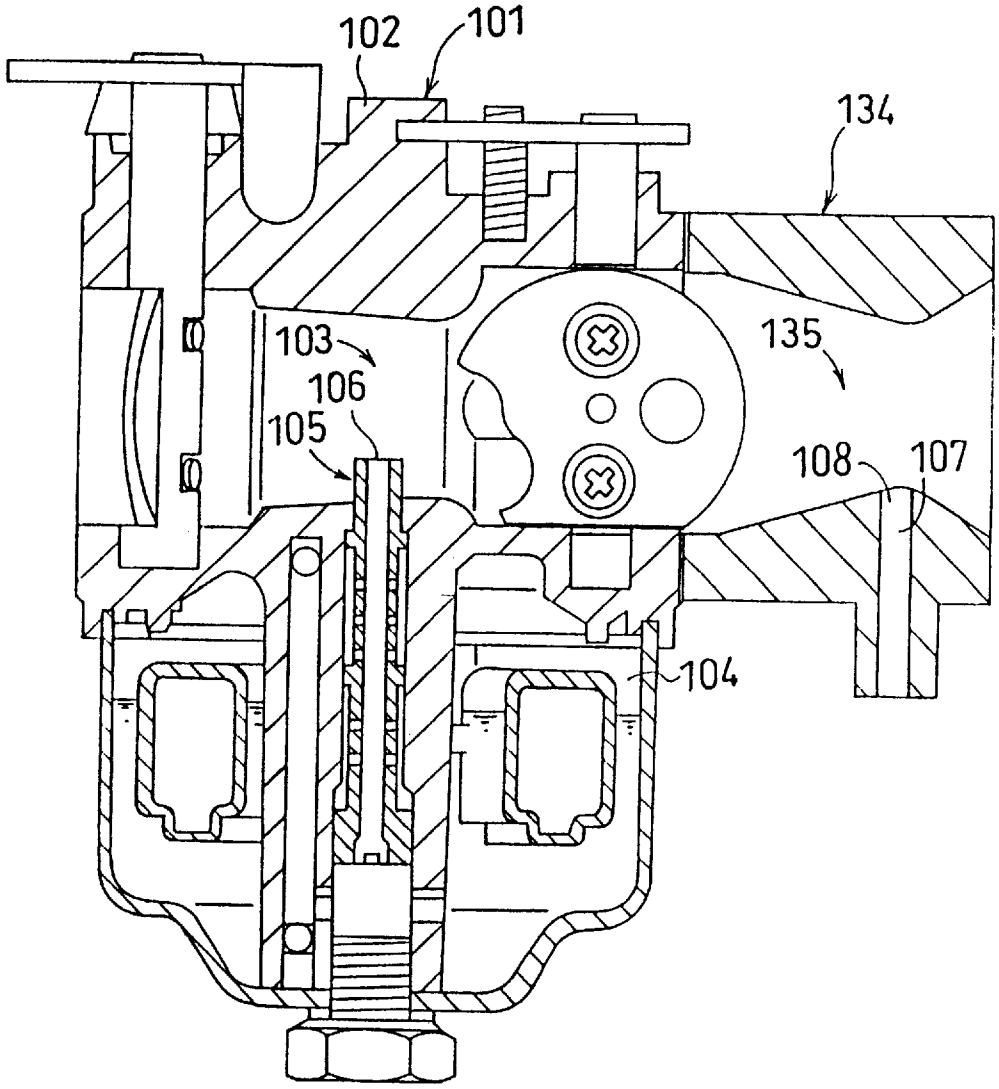

FIG. 8
PRIOR ART

FUEL SUPPLYING DEVICE FOR ENGINE

BACKGROUND OF THE INVENTION

1. Field of the Invention

The present invention relates to a fuel supplying device for an engine.

2. Description of Prior Art

FIG. **8** shows a prior art of a fuel supplying device for an engine. This prior art comprises a carburetor **101** having a mixing body **102** in which a venturi passage **103** is provided, a float chamber **104** being arranged in the mixing body **102**, a liquid fuel nozzle **105** communicating with the float chamber **104**, a liquid fuel nozzle outlet **106** facing the venturi passage **103**, as well as the present invention.

The prior art connects a gas mixer **134** to the carburetor **101** in series on an intake upstream side thereof and provides a gaseous fuel nozzle **107** in the gas mixer **134**. A gaseous fuel nozzle outlet **108** is faced to a venturi passage **135** of the gas mixer **134** so as to be able to supply the alternative of a liquid fuel or a gaseous fuel.

The foregoing prior art has the following problems.

The venturi passage **103** of the carburetor **101** is arranged in series with the venturi passage **135** of the gas mixer **134** to produce a two-step throttling resistance, which increases an intake resistance and therefore lowers a filling efficiency of introduced air with the result of decreasing an output.

The positioning of the gas mixer **134** on the intake upstream side of the carburetor **101** disturbs an air current introduced into the venturi passage **103** of the carburetor **101** to thereby lower the accuracy of metering the liquid fuel.

The use of both the carburetor **101** and the gas mixer **134** enlarges the device.

SUMMARY OF THE INVENTION

The present invention relates to a fuel supplying device for an engine. And it has an object to provide a device capable of obtaining a high output, enhancing the accuracy of metering a liquid fuel and being made compact.

The present invention is constructed as follows.

A carburetor **1** has a mixing body **2** in which a venturi passage **3** is provided. A float chamber **4** is arranged in the mixing body **2**. A liquid fuel nozzle **5** is communicated with the float chamber **4** and a liquid fuel nozzle outlet **6** is faced to the venturi passage **3**.

Then the mixing body **2** is provided with a gaseous fuel nozzle **7**. The liquid fuel nozzle outlet **6** and a gaseous fuel nozzle outlet **8** are faced to the same venturi passage **3** so as to be able to supply the alternative of a liquid fuel or a gaseous fuel.

The above-mentioned invention presents the following effects.

Removing the gas mixer can decrease the intake resistance and increase the air filling efficiency to result in obtaining a high output.

Since no gas mixer needs to be provided on the intake upstream side of the carburetor **1**, any turbulence hardly occurs in an introduced air current flowing through the venturi passage **3** of the carburetor **1** to result in the possibility of enhancing the accuracy of metering the liquid fuel.

Necessity of no gas mixer can also make the device compact.

BRIEF DESCRIPTION OF THE DRAWINGS

FIG. **1** is a vertical sectional view of a carburetor to be used for an engine of a first embodiment of the present invention.

FIG. **2** is a sectional view taken along a line II—II of FIG. **1**.

FIG. **3** is a perspective view of a fuel supplying device to be used for the first embodiment.

FIG. **4** is a plan view of a principal part of a carburetor to be used for the first embodiment; FIG. **4**(A) is a view showing a valve opening degree setting lever in a posture for setting gas start; and FIG. **4**(B) is a view showing the valve opening degree setting lever in a posture for cancelling the gas start.

FIG. **5** is a plan view of a principal part of the engine of the first embodiment.

FIG. **6** is a view showing a second embodiment which corresponds to FIG. **1**.

FIG. **7** is a view showing a third embodiment which corresponds to FIG. **1**.

FIG. **8** is a vertical sectional view of a carburetor according to a prior art.

DESCRIPTION OF THE PREFERRED EMBODIMENTS

Embodiments of the present invention will be explained with reference to the attached drawings.

FIGS. **1** to **5** explain an engine of high tension ignition type according to a first embodiment of the present invention. This engine is constructed as follows.

As shown in FIG. **5**, a cylinder head **51** is assembled onto a cylinder block **50**. When taking a direction of a crank axis **52** as a front and rear direction, a timing transmission case **53** is assembled to the cylinder block **50** and the cylinder head **51** in front of them. A valve gear cam case **54** is disposed on a lateral side of the cylinder block **50**. The valve gear cam case **54** is connected at its front portion to the timing transmission case **53**. An intake manifold **55** is assembled to a lateral side of the cylinder head **51** and a carburetor **1** is attached to a rear portion of the latter.

The carburetor **1** is constructed as follows.

As shown in FIG. **1**, the carburetor **1** has a mixing body **2** in which a venturi passage **3** is provided. A float chamber **4** is arranged in the mixing body **2**. A liquid fuel nozzle **5** is communicated with the float chamber **4**. A liquid fuel nozzle outlet **6** is faced to the venturi passage **3**.

Arranged below the mixing body **2** is the float chamber **4** accommodating a float **36** therein. A needle valve **37** mounted on the float **36** is adjusted to open or close a port **40** for supplying a liquid fuel to the float chamber **4**. The mixing body **2** is provided with an air vent **42**, through which an intake passage (not shown) on an intake upstream side of the mixing body **2** communicates with the float chamber **4**.

Vertically provided from the mixing body **2** into the float chamber **4** is a nozzle accommodating boss **41**, into which a liquid fuel nozzle **5** is fitted. An upper end of the liquid fuel nozzle **5** projects into the venturi passage **3**. There is arranged below the liquid fuel nozzle **5** a jet **56** for metering the liquid fuel. An inner bottom portion of the float chamber **4** is provided with a liquid fuel inlet **13**, through which the float chamber **4** communicates with the liquid fuel nozzle **5**. Laterally arranged at a lower portion of the float chamber **4** is a liquid fuel valve **14** for opening or closing the inlet **13**. As shown in FIG. **2**, the venturi passage **3** has a choke valve **27** arranged on its intake upstream side and a throttle valve **22** disposed on its intake downstream side.

In order to obtain a high output, this first embodiment provides a gaseous fuel nozzle **7** in the mixing body **2** and

faces the liquid fuel nozzle outlet **6** and a gaseous fuel nozzle outlet **8** to the same venturi passage **3** so as to be able to supply the alternative of a liquid fuel or a gaseous fuel, as shown in FIG. **1**. This arrangement dispenses with the gas mixer to thereby decrease an intake resistance and increase an air filling efficiency with the result of obtaining a high output. Further, it removes the provision of the gas mixer on the intake upstream side of the carburetor **1**, so that any turbulence hardly occurs in an introduced air current flowing through the venturi passage **3** of the carburetor **1** to result in enhancing the accuracy of metering the liquid fuel. Additionally, necessity of no gas mixer can make the device compact.

As shown in FIG. **3**, this embodiment provides an liquid fuel supply passage **43** so as to feed the liquid fuel from a liquid fuel supply source **16** into the float chamber **4**. A liquid fuel cock **44**, a liquid fuel filter **45** and an electrically operated liquid fuel pump **15** are arranged in the mentioned order from the supply source **16** in the liquid fuel supply passage **43**. Further, a gaseous fuel supply passage **39** is provided to feed a gaseous fuel from a gaseous fuel supply source **31** to the carburetor **1**. A gaseous fuel filter **46**, an upstream gaseous fuel valve **47** of electromagnetic type, a vaporizer **32** and a downstream gaseous fuel valve **33** of electromagnetic type are arranged in the mentioned order from the supply source **31** in the gaseous fuel supply passage **39**.

This embodiment connects a fuel change-over means **26** to an ON position **49** of a key switch **28** as shown in FIG. **3** so as to change a gaseous fuel supply over to a liquid fuel supply or vice versa. The change-over means **26** is associated with a liquid fuel valve **14** and two gaseous fuel valves **47** and **33**. In a case where with the change-over means **26** in a gaseous fuel supply state, the key switch **28** is at an engine start position **29** or the ON position **49**, the two valves **47** and **33** are kept open through energizing to thereby supply the gaseous fuel to the venturi passage **3**. In this case, the liquid fuel valve **14** is not energized to keep itself closed and therefore the liquid fuel is not fed to the venturi passage **3**.

On the other hand, in a case where with the change-over means **26** in a liquid fuel supply state, the key switch **28** is at the engine start position **29** or the ON position **49**, the liquid fuel valve **14** is kept open through energizing to thereby supply the liquid fuel to the venturi passage **3**. In this case, the two valves **47** and **33** are not energized to keep themselves closed and therefore the gaseous fuel is not fed to the venturi passage **3**. An ignition device **63** is connected to the ON position **49** of the key switch **28**. When the key switch **28** is moved to the ON position **49** or the engine start position **29**, the ignition device **63** is operated.

In order to enhance the accuracy of metering the gaseous fuel, this embodiment faces the gaseous fuel nozzle outlet **8** to a passage portion having an inner diameter **10** larger than an inner diameter **9** of a passage portion to which the liquid fuel nozzle outlet **6** is opposed, as shown in FIG. **2**. This arrangement makes a negative pressure produced at the passage portion facing the nozzle outlet **8** smaller than that generated at the passage portion opposite to the nozzle outlet **6**, which results in the possibility of adapting the device to a suction of a gaseous fuel small in the mass and thereby enhancing the accuracy of metering the gaseous fuel.

This embodiment has arranged the gaseous fuel nozzle outlet **8** further upstream than the liquid fuel nozzle outlet **6** in an intake direction as shown in FIG. **2** so as to inhibit the liquid fuel from stagnating in the gaseous fuel supply passage **39**. Owing to this arrangement, the liquid fuel sucked into the venturi passage **3** from the nozzle **5** encounters a difficulty in entering the nozzle **7** positioned upstream in the intake direction. Thus it is hard for the liquid fuel to stagnate in the gaseous fuel supply passage **39** positioned upstream of the nozzle **7**. If a large amount of liquid fuel stagnates in the gaseous fuel supply passage **39**, much liquid fuel is pushed out of the supply passage **39** into the venturi passage **3** when commencing the gaseous fuel supply, flowed into a combustion chamber as it is to thereby probably cause an accident fire. However, since this embodiment makes it hard for the liquid fuel to stagnate in the gaseous fuel supply passage **39**, such an accident fire can be prevented.

Further, as shown in FIG. **1**, the gaseous fuel nozzle **7** is directed vertically downward toward the venturi passage **3**. This makes the liquid fuel adhered to an inner portion of such gaseous fuel nozzle **7** flow down into the venturi passage **3** by gravity to result in the possibility of more effectively inhibiting the liquid fuel from stagnating in the gaseous fuel supply passage **39**. It is also effective to incline the nozzle **7** downward toward the venturi passage **3** like a third embodiment as shown in FIG. **7**.

This first embodiment directs a gaseous fuel introduction passage **11** into the gaseous fuel nozzle **7** horizontally as shown in FIG. **1**. However, the introduction passage **11** may be inclined downward toward the nozzle **7** like the third embodiment shown in FIG. **7** or directed vertically downward. This arrangement makes the liquid fuel adhered to an inner portion of the thus oriented introduction passage **11** flow down toward the nozzle **7** by gravity to thereby more effectively prevent the liquid fuel from stagnating in the gaseous fuel supply passage **39**.

Besides, there is arranged an expansion chamber **12** having an imaginary gaseous fuel passage larger than the gaseous fuel nozzle **7** in sectional area between the nozzle **7** and the introduction passage **11**, as shown in FIG. **1**. According to this arrangement, even if an introduced air including a mist of liquid fuel enters the nozzle **7**, its flow speed decreases within the expansion chamber **12** and a large mist of liquid fuel drops down by gravity to be separated from the introduced air. This can more effectively prevent the liquid fuel from stagnating in the gaseous fuel supply passage **39**.

In addition, as shown in FIG. **1**, the gaseous fuel introduction passage **11** is connected to the gaseous fuel nozzle **7** via the expansion chamber **12** in a bent form. Owing to this arrangement, most of the air entered from the nozzle **7** into the expansion chamber **12** passes through the expansion chamber **12** along a direction in which the nozzle **7** is formed. Therefore, the air hardly enters the introduction passage **11** connected to the nozzle **7** in the bent form to thereby more effectively inhibit the liquid fuel from stagnating in the gaseous fuel supply passage **39**.

Since the expansion chamber **12** is situated at a joint portion through which the introduction passage **11** is connected to the nozzle **7** in the bent form, a resistance at the joint portion can be decreased to smoothly pass the gaseous fuel with the result of enhancing the accuracy of metering the gaseous fuel.

In order to inhibit the operation condition and the exhaust gas property from degrading when changing over to the gaseous fuel supply, as shown in FIG. **1**, this first embodiment provides the liquid fuel inlet **13** between the float chamber **4** and the liquid fuel nozzle **5** and further provides the liquid fuel valve **14** for opening or closing the inlet **13**.

The valve **14** is opened during the liquid fuel supply and it is closed during the gaseous fuel supply. Owing to this arrangement, when changing the liquid fuel supply over to the gaseous fuel supply, no liquid fuel is sucked into the venturi passage **3** after a small amount of liquid fuel remaining in the liquid fuel nozzle **5** having been sucked into the venturi passage **3**. In consequence, the air-mixture concentration of the gaseous fuel can be optimized within a short period of time after having changed over to the gaseous fuel supply to result in the possibility of inhibiting the operation condition and the exhaust gas property from degrading.

This first embodiment operates the liquid fuel pump **15** even during the gaseous fuel supply to feed the liquid fuel from the liquid fuel supply source **16** to the float chamber **4** of the carburetor **1** as shown in FIG. **3** so as to prevent the needle valve **37** of the float **36** from wearing off. Thanks to this arrangement, as shown in FIG. **1**, even if the liquid fuel within the float chamber **4** evaporates and flows out of the air vent **42** and the like, the liquid fuel pump **15** supplements the liquid fuel into the float chamber **4** and therefore the float chamber **4** is most unlikely to become empty. Should the float chamber **4** become empty, the float **36** vigorously moves up and down because of the vibration of the engine, thereby damaging the needle valve **37** of the float **36**. However, this embodiment removes the likelihood that the float chamber **4** becomes empty and therefore can prevent the needle valve **37** of the float **36** from being damaged. The liquid fuel pump **15** is connected directly to the ON position **49** of the key switch **28** without bypassing the fuel change-over means **26**. Thus the liquid fuel pump **15** is being operated even during the gaseous fuel supply.

In order to smoothly start the engine with the gaseous fuel, this embodiment provides a valve opening degree setting lever **17** outside the mixing body **2** and further arranges a butting portion **18** in this setting lever **17**. The setting lever **17** is adjusted to be able to change from a gas start setting posture **19** to a gas start cancelling posture **20** or vice versa. When switching over the setting lever **17** to the gas start setting posture **19** and receiving a throttle input lever **21** by the butting portion **18**, the throttle valve **22** takes a gas start optimum posture **24** with a predetermined opening degree **23**. On the other hand, when the setting lever **17** is switched over to the gas start cancelling posture **20**, the butting portion **18** is adjusted to retreat to a position where it does not interfere with the throttle input lever **21**.

This arrangement can make the throttle valve **22** take the gas start optimum posture **24** with the predetermined opening degree **23** when starting the engine with the gaseous fuel. If the opening degree of the throttle valve **22** is too small when starting the engine with the gaseous fuel, an insufficient amount of air-mixture is supplied to the combustion chamber. On the other hand, if the opening degree of the throttle valve is too large, there is caused a case where the concentration of the air-mixture to be supplied to the combustion chamber becomes too thin to smoothly start the engine. However, this embodiment can place the throttle valve **22** in the gas start optimum posture **24**, so that it is possible to smoothly start the engine with the gaseous fuel.

Further, when the valve opening degree setting lever **17** is switched over to the gas start cancelling posture **20** after the engine start with the gaseous fuel has finished, the butting portion **18** retreats to the position where it does not interfere with the throttle input lever **21**. Consequently, the valve opening degree setting lever **17** does not disturb the movement of the throttle valve **22** during the normal operation with the gaseous fuel as well as when starting or normally operating the engine with the liquid fuel. In other words, it is possible to open or close the throttle valve **22** over a whole range.

This embodiment adjusts the butting portion **18** so as to receive the throttle input lever **21** trying to rotate in a direction for totally opening the throttle valve **22**. When a speed controlling means **64** is operated to a high speed side H, the throttle input lever **21** is urged toward the direction for totally opening the throttle valve **22** through a force **62** of a governor spring **61** of a mechanical governor **65**. The opening degree **23** for placing the throttle valve **22** in the gas start optimum posture **24** is set depending on an engine adopting this carburetor **1**. In this embodiment, the opening degree of the completely closed posture of the throttle valve **22** is set to 0 degrees and that of the totally opened posture, to 90 degrees. Further, the above-mentioned opening degree **23** is set to 30 degrees.

In order to start the engine with the gaseous fuel by a simple operation, this embodiment interlockingly connects the valve opening degree setting lever **17** to an electrically operated actuator **25** as shown in FIG. **3**. With the fuel change-over means **26** in the gaseous fuel supply state and the opening degree of the choke valve **27** being not less than a predetermined value, when the key switch **28** is moved to the engine start position **29**, a starter **30** and the actuator **25** are adjusted to operate to place the setting lever **17** in the gas start setting posture **19**. This adjustment can operate the starter **30** and the actuator **25** only by moving the key switch **28** to the engine start position **29** when the engine start with the gaseous fuel is proper or when the opening degree of the choke valve **27** is not less than the predetermined value. Thus it is possible to easily start the engine with the gaseous fuel.

In this embodiment, when the key switch **28** is moved from the engine start position **29** to the ON position **49**, the starter **30** stops and the actuator **25** returns the valve opening degree setting lever **17** to the gas start cancelling posture **20** after an elapse of a predetermined set time. As shown in FIG. **3**, the fuel change-over means **26** and the engine start position **29** of the key switch **28** are interlocked to the starter **30** and the actuator **25** through a control means **60** to effect the foregoing control. A microcomputer is employed for the control means **60**.

In order not to start the engine when the engine start with the gaseous fuel is improper, as shown in FIG. **3**, with the fuel change-over means **26** in the gaseous fuel supply state and the opening degree of the choke valve **27** being below the predetermined value, this embodiment does not operate the starter **30** even if the key switch **28** is moved to the engine start position **29**. This arrangement does not operate the starter **30** and therefore cannot start the engine when the engine start with the gaseous fuel is improper or when the opening degree of the choke valve **27** is below the predetermined value. Should the gaseous fuel start the engine with the opening degree of the choke valve **27** being below the predetermined value, there is a fear that the air-mixture of the gaseous fuel becomes so thick that it degrades the exhaust gas property. But this embodiment does not operate the starter **30** when the opening degree of the choke valve **27** is below the predetermined value. Therefore, it can prevent the exhaust gas property from degrading and at the same time warn an operator that the opening degree of the choke valve **27** is inappropriate. Such a control is performed by the control means **60**.

In order to smoothly start the engine with the liquid fuel, with the fuel change-over means **26** in the liquid fuel supply state, this embodiment operates the starter **30** but it does not operate the actuator **25** when the key switch **28** is moved to the engine start position **29**, thereby maintaining the valve opening degree setting lever **17** in the gas start cancelling posture **20**, as shown in FIG. **3**.

This arrangement keeps the setting lever **17** in the gas start cancelling posture **20** at the time of starting the engine with the liquid fuel as shown in FIG. **4** to result in the possibility of smoothly starting the engine with the liquid fuel without disturbing the supply of the air-mixture of the liquid fuel to the combustion chamber by the opening limit of the throttle valve **22**. The control means **60** performs such a control.

This embodiment provides the gaseous fuel valve **33** downstream of the vaporizer **32** for gasifying a fuel from the gaseous fuel supply source **31** and feeding the gasified fuel to the gaseous fuel nozzle **7** as shown in FIG. **3**, and it further opens the gaseous fuel valve **33** during the gaseous fuel supply but closes the same during the liquid fuel supply so as to optimize the air-mixture concentration of the liquid fuel within a short period of time when changed over to the liquid fuel supply. This arrangement removes a likelihood that the gaseous fuel is sucked into the venturi passage **3** after a small amount of gaseous fuel remaining downstream of the gaseous fuel valve **33** having been sucked into the venturi passage **3** when the gaseous fuel supply is changed over to the liquid fuel supply. Consequently, it is possible to optimize the air-mixture concentration of the liquid fuel within a short period of time after having been changed over to the liquid fuel supply and inhibit the operation condition and the exhaust gas property from degrading. In addition, even if the choke valve **27** is about to be completely closed when starting the engine with the liquid fuel, the gaseous fuel valve **33** is closed and therefore a large negative pressure produced in the venturi passage **3** does not influence on the vaporizer **32**, which prevents a diaphragm or the like arranged within the vaporizer **32** from being damaged. The control means **60** conducts such a control.

This embodiment attaches the gaseous fuel valve **33** to the mixing body **2** so as to optimize the air-mixture concentration of the liquid fuel within a short period of time after having been changed over to the liquid fuel supply. The vaporizer **32** is equipped with a pressure regulating portion and serves also as a regulator.

According to the above construction, when the gaseous fuel supply is changed over to the liquid fuel supply, the gaseous fuel is not sucked into the venturi passage **3** after an extremely small amount of gaseous fuel remaining downstream of the gaseous fuel valve **33** having been sucked into the venturi passage **3**. Consequently, the air-mixture concentration of the liquid fuel can be optimized within a short period of time after having changed over to the liquid fuel supply, so that the operation condition can be prevented from degrading as well as the exhaust gas property. Moreover, there is hardly occurred a failure to mount the gaseous fuel valve **33** within the gaseous fuel supply passage **39**.

In order to prevent the liquid fuel from stagnating in the gaseous fuel supply passage **39**, this first embodiments directs the gaseous fuel nozzle **7** downward toward the venturi passage **3** and provides in the mixing body **2** the gaseous fuel introduction passage **11** for introducing the gaseous fuel from the vaporizer **32** to the gaseous fuel supply nozzle **7**. Further, it provides above the gaseous fuel nozzle **7** the expansion chamber **12** having an imaginary gaseous fuel passage larger than the gaseous fuel nozzle **7** in sectional area, which communicates the gaseous fuel introduction passage **11** with the gaseous fuel nozzle **7**. A seat **33***a* of the gaseous fuel valve **33** is arranged in an outlet **11***a* of the gaseous fuel introduction passage **11**, which outlet **11***a* faces the expansion chamber **12**.

According to the above construction, the expansion chamber **12** being provided above the gaseous fuel nozzle **7**, even if the introduced air including the liquid fuel enters the gaseous fuel nozzle **7** during the liquid fuel supply, the flow speed of this air decreases within the expansion chamber **12** and large liquid drops fall down by gravity. And these falling down liquid drops return to the venturi passage **3** through the downwardly directed nozzle **7**. Further, since the seat **33***a* of the gaseous fuel valve **33** is arranged in the outlet **11***a* of the gaseous fuel introduction passage **11**, the liquid fuel does not enter the introduction passage **11**. Therefore, the liquid fuel scarcely stagnates in the gaseous fuel supply passage **39** while being supplied. If the liquid fuel stagnates in the supply passage **39**, the stagnating liquid fuel is pushed out of the supply passage **39** into the venturi passage **3** when commencing the gaseous fuel supply, and flowed into the combustion chamber as it is to lead to a likelihood of causing an accident fire. The present invention hardly causes the liquid fuel to stagnate in the gaseous fuel supply passage **39** to result in the possibility of preventing such an accident fire from happening.

This embodiment constructs the gaseous fuel valve **33** from a linear actuator **33***b*, a valve body **33***d* attached to a front end of an output rod **33***c* of the linear actuator **33***b* and the valve seat **33***a*. The linear actuator **33***b* reciprocates the valve body **33***d* within the expansion chamber **12** to open or close the gaseous fuel valve **33**. According to this construction, the expansion chamber **12** can be effectively used as a valve chamber, which in turn can attach the gaseous fuel valve **33** to the carburetor **1** compactly.

This embodiment is constructed as follows so as not to start the engine if the engine start with the gaseous fuel is improper.

As shown in FIG. **3**, in a case where the choke valve **27** has an opening degree not less than the predetermined value to take an almost totally opened posture with the fuel change-over means **26** in the gaseous fuel supply state, the gaseous fuel valve **33** is adjusted to be opened. On the other hand, provided that the choke valve **27** has an opening degree below the predetermined value to take an almost completely closed posture even with the fuel change-over means **26** in the gaseous fuel supply state, the gaseous fuel valve **33** is adjusted to be closed. As the opening degree of the choke valve **27** has a larger value, the choke valve **27** comes closer to the totally opened posture.

According to the above construction, when the engine start with the gaseous fuel is improper or when the choke valve **27** has an opening degree below the predetermined value to take an almost completely closed posture, the gaseous fuel valve **33** is closed to make the engine start impossible. Should the engine be started with the gaseous fuel while the choke valve **27** is being almost completely closed, the air-mixture concentration of the gaseous fuel becomes so thick that it causes a likelihood of degrading the exhaust gas property. However, since this embodiment does not start the engine with the choke valve **27** almost closed, it can prevent the exhaust gas property from degrading and at the same time warn the operator that the posture of the choke valve **27** is improper.

As shown in FIG. **3**, the choke valve **27** is interlockingly connected to a choke valve operating member **58** through a push-pull wire **57** and its input arm **67** is provided with a pushing piece **68**, to which a means **59** for detecting the opening degree of the choke valve **27** is opposed. Depending on whether or not the pushing piece **68** contacts with the detecting means **59**, the present invention can detect the opening degree of the choke valve **27** is either not less than or below the predetermined value. The fuel change-over

means **26** is provided with a relay **69**, which is associated with the detecting means **59**. When the detecting means **59** detects the opening degree of the choke valve **27** to be below the predetermined value, the relay **69** becomes OFF to deenergize the gaseous fuel valves **47** and **33** even with the fuel change-over means **26** in the gaseous fuel supply state and therefore keep them closed.

This embodiment attaches to the mixing body **2** the gaseous fuel valve **33** and the means **59** for detecting the opening degree of the choke valve **27**. Consequently, it is very seldom to fail to attach them.

A second embodiment shown in FIG. **6** has the same construction as that of the first embodiment except that the downstream gaseous fuel valve **33** and the gaseous fuel supply passage **39** are different from those of the first embodiment in shape. In FIG. **6**, the same elements as those of the first embodiment are designated by the same numerals.

A third embodiment shown in FIG. **7** inclines the gaseous fuel nozzle **7** downward toward the venturi passage **3** and slants the gaseous fuel introduction passage **11** downward toward the nozzle **7**. It further connects the introduction passage **11** to the nozzle **7** straightly through the expansion chamber **12**. Besides, the liquid fuel metering jet **56** accommodated within the nozzle accommodating boss **41** is adjusted to serve also as the liquid fuel inlet **13**. The liquid fuel valve **14** for opening or closing the inlet **13** is arranged vertically at a lower portion of the float chamber **4**. A downstream gas valve (not shown) is provided at a half-way portion of the gaseous fuel supply passage **39**. The other construction is the same as that of the first embodiment. In FIG. **7**, the same elements as those of the first embodiment are designated by the same numerals.

What is claimed is:

1. A fuel supplying device for an engine, comprising a carburetor (**1**) having a mixing body (**2**) in which a venturi passage (**3**) is provided, a float chamber (**4**) being arranged in the mixing body (**2**), a liquid fuel nozzle (**5**) communicating with the float chamber (**4**), a liquid fuel nozzle outlet (**6**) facing the venturi passage (**3**), wherein

the mixing body (**2**) is provided with a gaseous fuel nozzle (**7**), the liquid fuel nozzle outlet (**6**) and a gaseous fuel nozzle outlet (**8**) facing the same venturi passage (**3**) so as to be able to supply the alternative of a liquid fuel or a gaseous fuel.

2. A fuel supplying device as set forth in claim **1**, wherein the gaseous fuel nozzle outlet (**8**) faces a passage portion having an inner diameter (**10**) larger than an inner diameter (**9**) of a passage portion opposed to the liquid fuel nozzle outlet (**6**).

3. A fuel supplying device as set forth in claim **1**, wherein the gaseous fuel nozzle outlet (**8**) is arranged further upstream than the liquid fuel nozzle outlet (**6**) in a intake direction.

4. A fuel supplying device as set forth in claim **1**, wherein the gaseous fuel nozzle (**7**) is directed vertically downward or inclined downward toward the venturi passage (**3**).

5. A fuel supplying device as set forth in claim **1**, wherein an gaseous fuel introduction passage (**11**) into the gaseous fuel nozzle (**7**) is inclined downward or directed vertically downward toward the gaseous fuel nozzle (**7**).

6. A fuel supplying device as set forth in claim **1**, wherein there is arranged between the gaseous fuel nozzle (**7**) and a gaseous fuel introduction passage (**11**) an expansion chamber (**12**) having an imaginary gaseous fuel passage larger than the gaseous fuel nozzle (**7**) in sectional area.

7. A fuel supplying device as set forth in claim **6**, wherein the expansion chamber (**12**) connects the gaseous fuel introduction passage (**11**) to the gaseous fuel nozzle (**7**) in a bent form.

8. A fuel supplying device as set forth in claim **1**, wherein a liquid fuel inlet (**13**) is provided between the float chamber (**4**) and the liquid fuel nozzle (**5**) and a liquid fuel valve (**14**) for opening or closing the inlet (**13**) is also provided, the liquid fuel valve (**14**) being opened during a liquid fuel supply and it being closed during a gaseous fuel supply.

9. A fuel supplying device as set forth in claim **8**, wherein a liquid fuel pump (**15**) is operated even during the gaseous fuel supply so as to feed a liquid fuel from a liquid fuel supply source (**16**) to the float chamber (**4**) of the carburetor (**1**).

10. A fuel supplying device as set forth in claim **1**, wherein a valve opening degree setting lever (**17**) is arranged outside the mixing body (**2**) and provided with a butting portion (**18**) so as to switch over the setting lever (**17**) from a gas start setting posture (**19**) to a gas start cancelling posture (**20**) or vice versa, a throttle valve (**22**) being placed in a gas start optimum posture (**24**) with a predetermined opening degree (**23**) when switching over the setting lever (**17**) to the gas start setting posture (**19**) and receiving a throttle input lever (**21**) by the butting portion (**18**) and on the other hand the butting portion (**18**) retreating to a position where it does not interfere with the throttle input lever (**21**) when switching over the setting lever (**17**) to the gas start cancelling posture (**20**).

11. A fuel supplying device as set forth in claim **10**, wherein the valve opening degree setting lever (**17**) is interlockingly connected to an electrically operated actuator (**25**), with a fuel change-over means (**26**) in a gaseous fuel supply state and an opening degree of a choke valve (**27**) being not less than a predetermined value, a starter (**30**) and the actuator (**25**) being operated to place the setting lever (**17**) in the gas start setting posture (**19**) when a key switch (**28**) is moved to an engine start position (**29**).

12. A fuel supplying device as set forth in claim **11**, wherein with the fuel change-over means (**26**) in the gaseous fuel supply state and an opening degree of the choke valve (**27**) being below the predetermined value, the starter (**30**) is not operated even when the key switch (**28**) is moved to the engine start position (**29**).

13. A fuel supplying device as set forth in claim **11**, wherein with the fuel change-over means (**26**) in a liquid fuel supply state, when the key switch (**28**) is moved to the engine start position (**29**), the starter (**30**) is operated but the actuator (**25**) is not operated to thereby maintain the valve opening degree setting lever (**17**) in the gas start cancelling posture (**20**).

14. A fuel supplying device as set forth in claim **1**, wherein a gaseous fuel valve (**33**) is arranged downstream of a vaporizer (**32**) for gasifying a fuel from a gaseous fuel supply source (**31**) and feeding the gasified fuel to the gaseous fuel nozzle (**7**), the gaseous fuel valve (**33**) being opened during a gaseous fuel supply but it being closed during a liquid fuel supply.

15. A fuel supplying device as set forth in claim **14**, wherein the gaseous fuel valve (**33**) is attached to the mixing body (**2**).

16. A fuel supplying device as set forth in claim **15**, wherein the gaseous fuel nozzle (**7**) is directed downward toward the venturi passage (**3**), the mixing body (**2**) being provided with a gaseous fuel introduction passage (**11**) for introducing the gaseous fuel from the vaporizer (**32**) into the gaseous fuel nozzle (**7**), there being arranged above the gaseous fuel nozzle (**7**) an expansion chamber (**12**) having an imaginary gaseous fuel passage larger than the gaseous fuel nozzle (**7**) in sectional area, which communicates the introduction passage (**11**) with the nozzle (**7**), a valve seat

(**33***a*) being arranged in an outlet (**11***a*) of the gaseous fuel introduction passage (**11**).

17. A fuel supplying device as set forth in claim **15**, wherein the gaseous fuel valve (**33**) is constructed from a linear actuator (**33***b*), a valve body (**33***d*) attached to a front end of an output rod (**33***c*) of the linear actuator (**33***b*) and the valve seat (**33***a*), the linear actuator (**33***b*) reciprocating the valve body (**33***d*) within the expansion chamber (**12**) so as to open or close the gaseous fuel valve (**33**).

18. A fuel supplying device as set forth in claim **14**, wherein the gaseous fuel valve (**33**) is opened when a choke valve (**27**) has an opening degree not less than a predetermined value to take an almost totally opened posture with a fuel change-over means (**26**) in a gaseous fuel supply state and it is closed when the choke valve (**27**) has an opening degree below the predetermined value to take an almost completely closed posture even with the fuel change-over means (**26**) in the gaseous fuel supply state.

19. A fuel supplying device as set forth in claim **18**, wherein the gaseous fuel valve (**33**) and a means (**59**) for detecting the opening degree of the choke valve (**27**) are attached to the mixing body. (**2**).

* * * * *