US008955869B2

(12) **United States Patent**
Zehfuss

(10) **Patent No.: US 8,955,869 B2**
(45) **Date of Patent: Feb. 17, 2015**

(54) **SEAT ATTACHMENT FOR A STROLLER**

(71) Applicant: **Mark Zehfuss**, Glen Allen, VA (US)

(72) Inventor: **Mark Zehfuss**, Glen Allen, VA (US)

(73) Assignee: **Baby Jogger, LLC**, Richmond, VA (US)

(*) Notice: Subject to any disclaimer, the term of this patent is extended or adjusted under 35 U.S.C. 154(b) by 0 days.

(21) Appl. No.: **14/261,558**

(22) Filed: **Apr. 25, 2014**

(65) **Prior Publication Data**

US 2014/0333039 A1 Nov. 13, 2014

Related U.S. Application Data

(63) Continuation of application No. 12/631,375, filed on Dec. 4, 2009, now abandoned.

(60) Provisional application No. 61/119,920, filed on Dec. 4, 2008.

(51) **Int. Cl.**

B62B 1/00	(2006.01)
A47C 13/00	(2006.01)
A47C 15/00	(2006.01)
B62B 9/28	(2006.01)
B62B 7/00	(2006.01)

(52) **U.S. Cl.**
CPC .. ***B62B 9/28*** (2013.01); ***B62B 7/006*** (2013.01)
USPC **280/648**; 280/650; 280/647; 280/642; 280/643; 297/130; 297/243

(58) **Field of Classification Search**
USPC 280/650, 657, 647, 648, 658, 639, 642, 280/643; 297/130, 232, 243, 463.1
See application file for complete search history.

(56) **References Cited**

U.S. PATENT DOCUMENTS

6,045,145	A	4/2000	Lan	
6,286,844	B1	9/2001	Cone, II et al.	
6,513,827	B1	2/2003	Barenbrug	
6,851,693	B2	2/2005	Haeggberg	
6,923,467	B2	8/2005	Hsia	
7,249,779	B2	7/2007	Ehrenreich et al.	
7,311,323	B1 *	12/2007	Lan	280/642
7,320,471	B2	1/2008	Maciejczyk	
7,367,581	B2	5/2008	Yang	
7,377,537	B2 *	5/2008	Li	280/650
7,475,900	B2 *	1/2009	Cheng	280/642
7,481,439	B2	1/2009	Thompson	
7,497,461	B2	3/2009	Emerson	
7,681,894	B2 *	3/2010	Santamaria	280/47.38
7,766,366	B2	8/2010	Li	
7,938,435	B2	5/2011	Sousa et al.	
8,029,007	B2	10/2011	Jones et al.	
8,033,554	B2 *	10/2011	Vieira et al.	280/47.38
8,061,732	B2 *	11/2011	Song et al.	280/650
8,231,136	B2 *	7/2012	Fiore, Jr.	280/648
8,444,171	B2 *	5/2013	Smith et al.	280/649

(Continued)

Primary Examiner — J. Allen Shriver, II
Assistant Examiner — James M Dolak
(74) *Attorney, Agent, or Firm* — Bernard G. Pike; Pike IP Law, PLLC

(57) **ABSTRACT**

The invention relates to a seat attachment for a stroller, single stroller and double strollers. Such a seat attachment may be used to reversibly convert a single stroller into a double stroller. More specifically, versions of the seat attachment relate to a seat attachment for a stroller capable of supporting a seat such as, but not limited to, a stroller seat, a baby seat, bassinet, a pram, a car seat, or a baby carrier, for example. The seat may be supported in front of a permanent seat of the stroller.

30 Claims, 10 Drawing Sheets

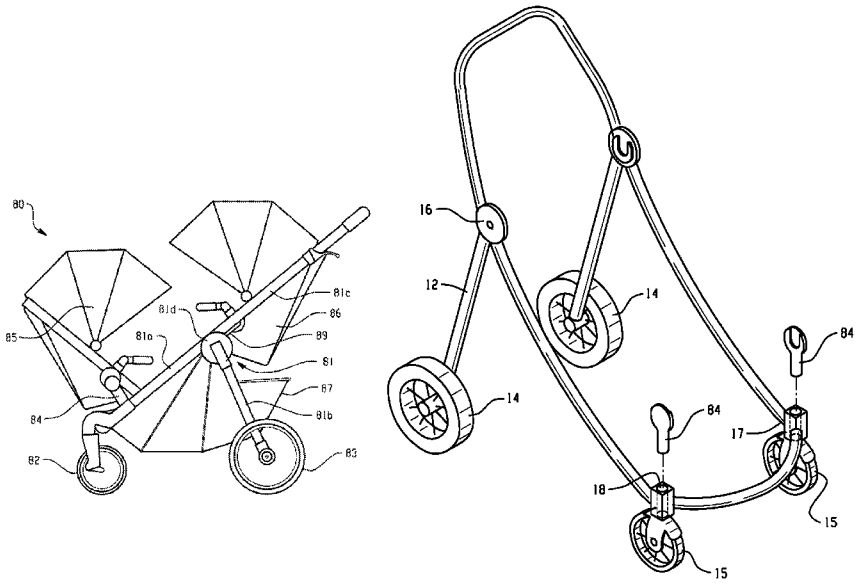

(56) **References Cited**

U.S. PATENT DOCUMENTS

8,458,880	B2 *	6/2013	Fiore, Jr.	29/426.5
8,696,016	B2 *	4/2014	Homan et al.	280/647
8,733,784	B2 *	5/2014	Kobayashi	280/647
8,764,048	B1 *	7/2014	Ahnert et al.	280/658
2001/0033069	A1	10/2001	Ivers	
2006/0001226	A1	1/2006	Refsum	
2006/0131841	A1	6/2006	Huang	
2007/0090619	A1	4/2007	Lundh	
2008/0224451	A1	9/2008	Vegt	
2008/0231022	A1	9/2008	Hu et al.	

* cited by examiner

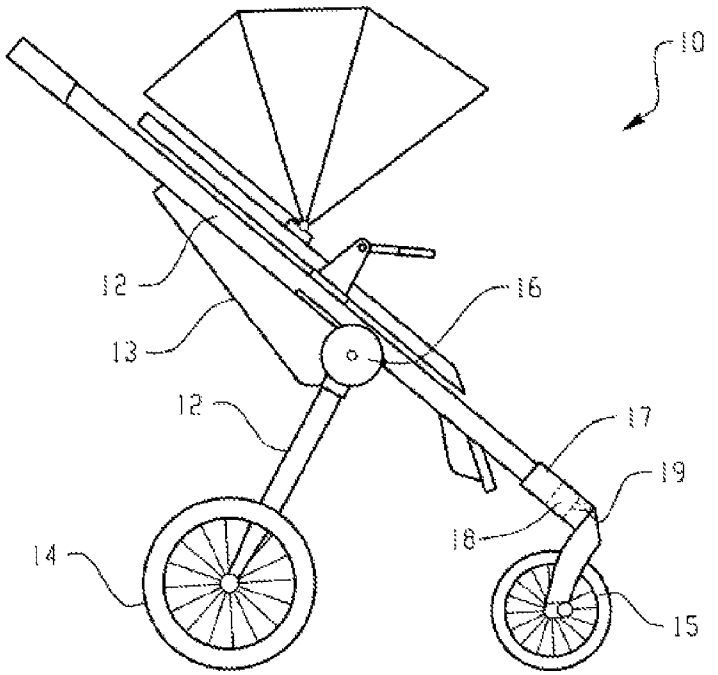

Fig. 1

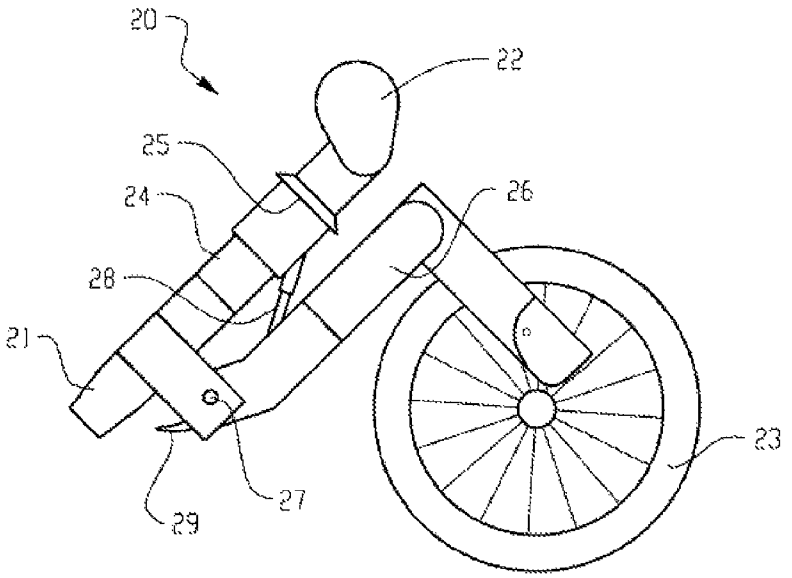

Fig. 2

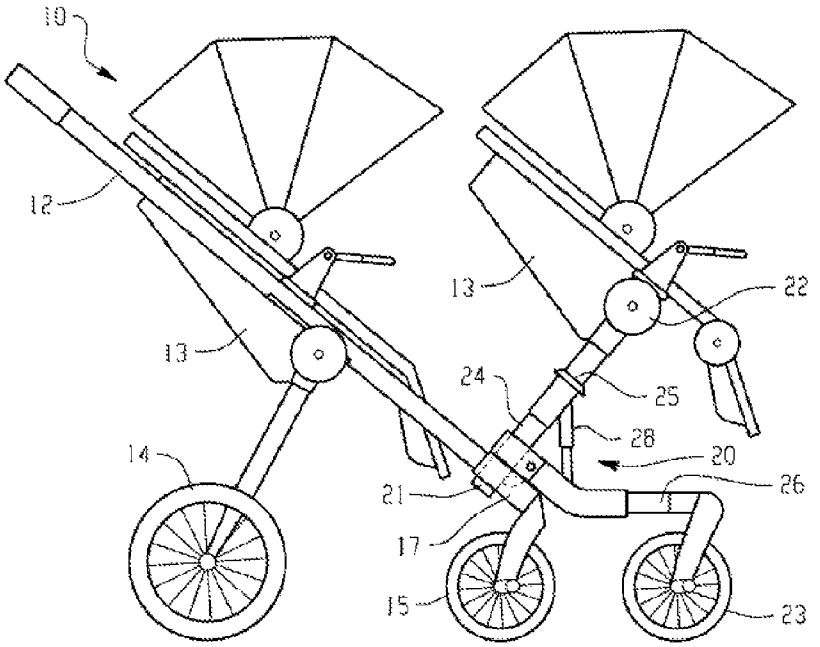

Fig. 3

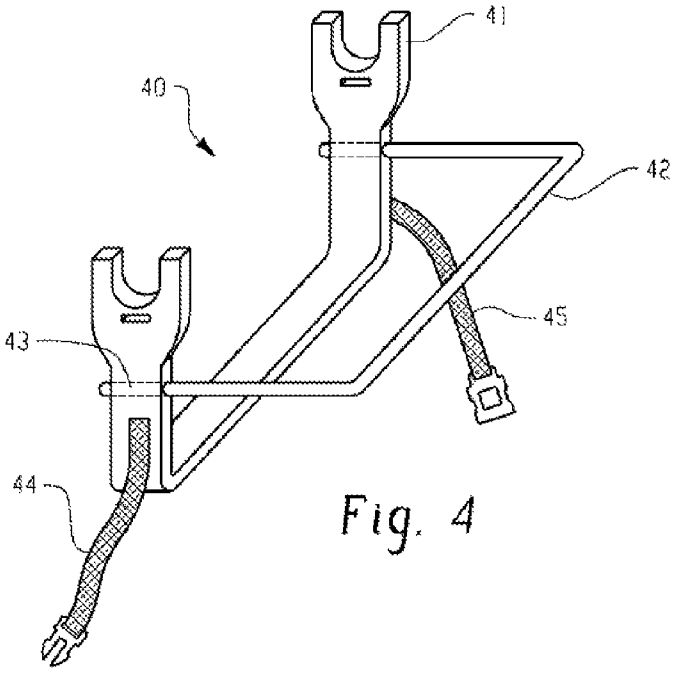

Fig. 4

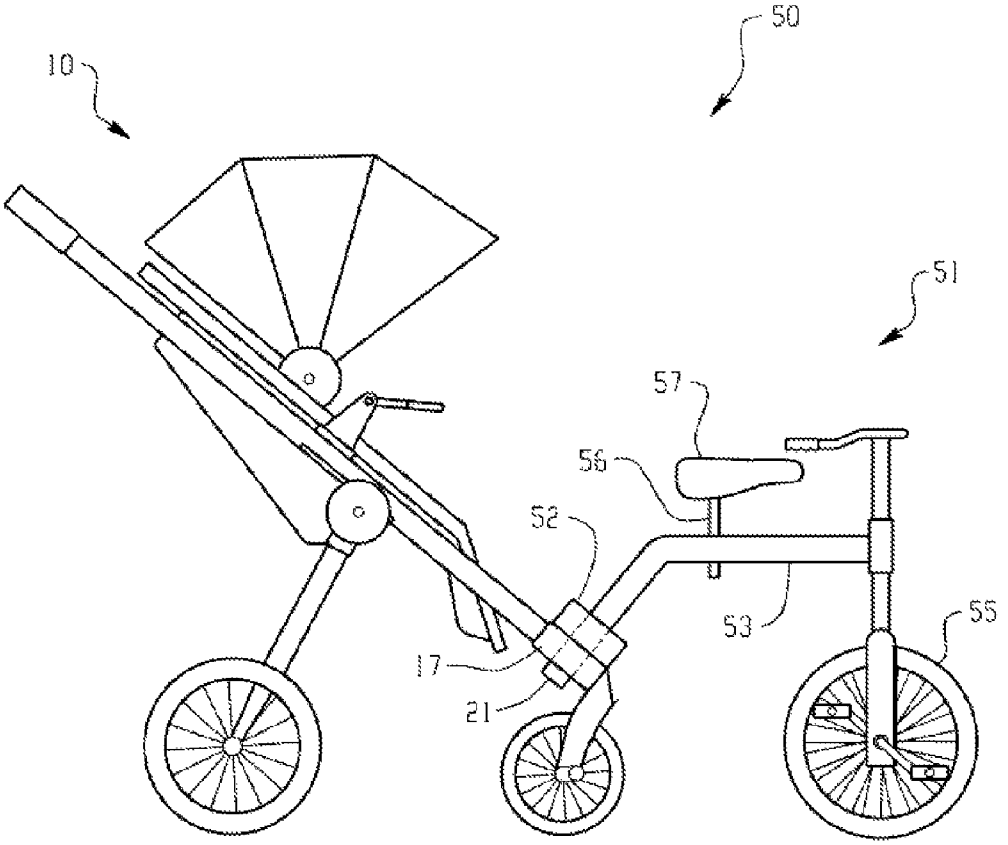

Fig. 5

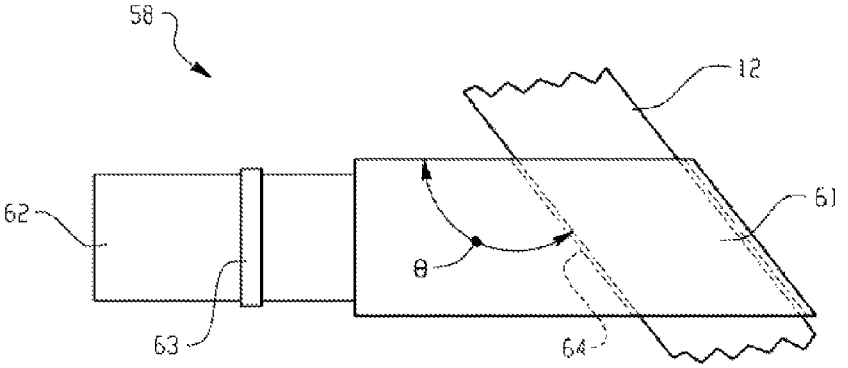

Fig. 6A

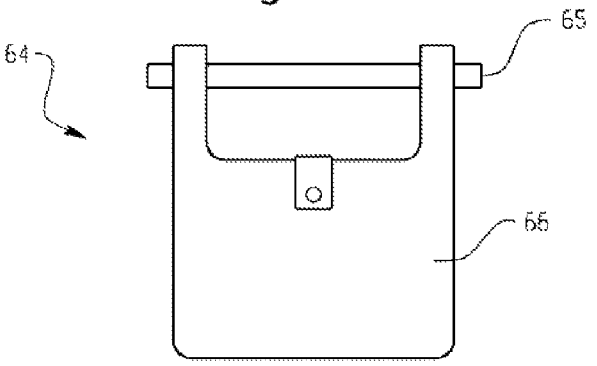

Fig. 6B

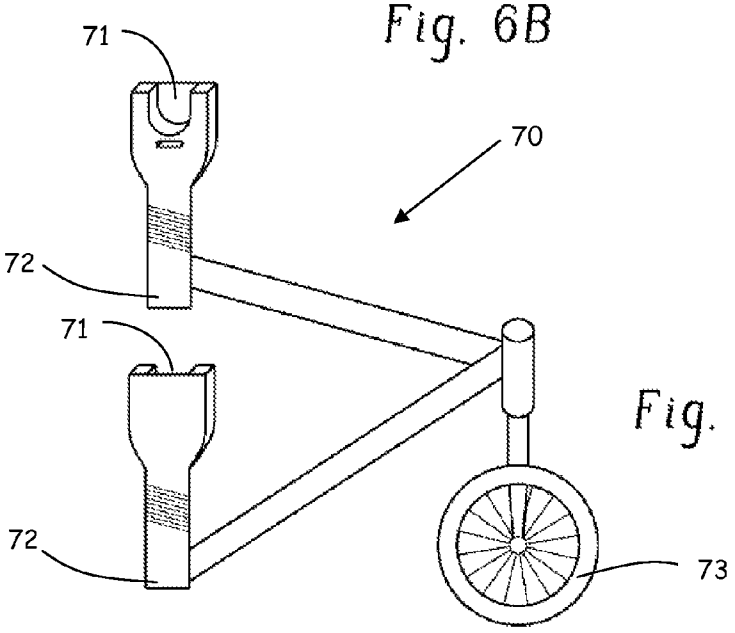

Fig. 7

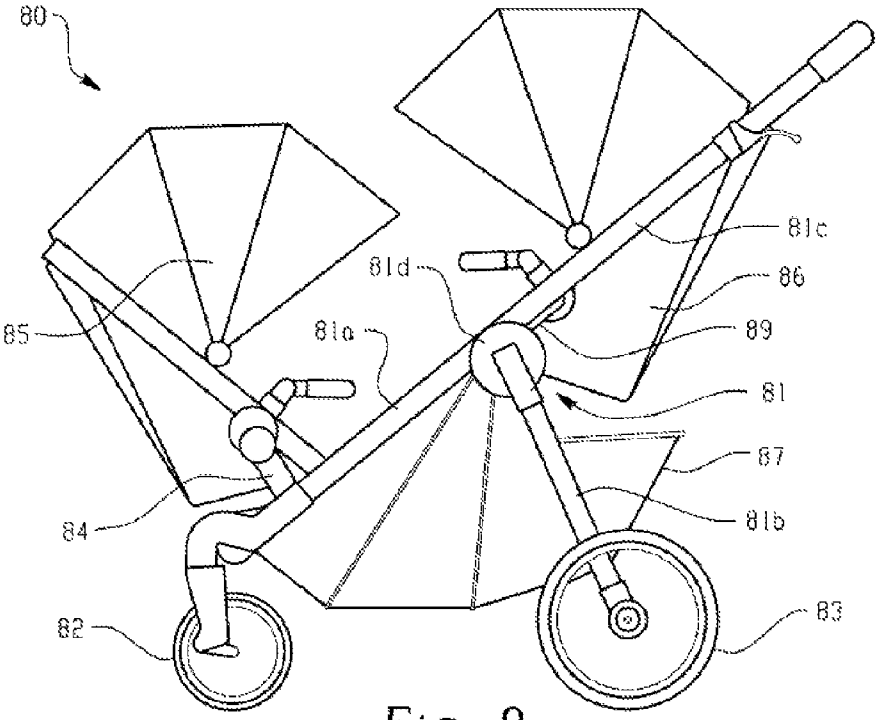
80
81c
81d
86
85
81a
89
81
87
84
81b
82
83

Fig. 8

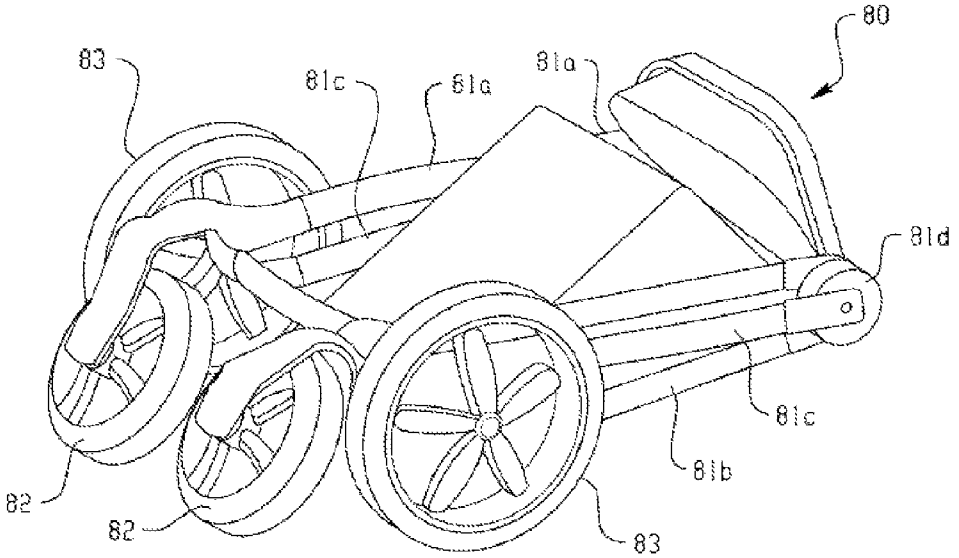
80
83
81c
81a
81a
81d
81c
81b
82
82
83

Fig. 8A

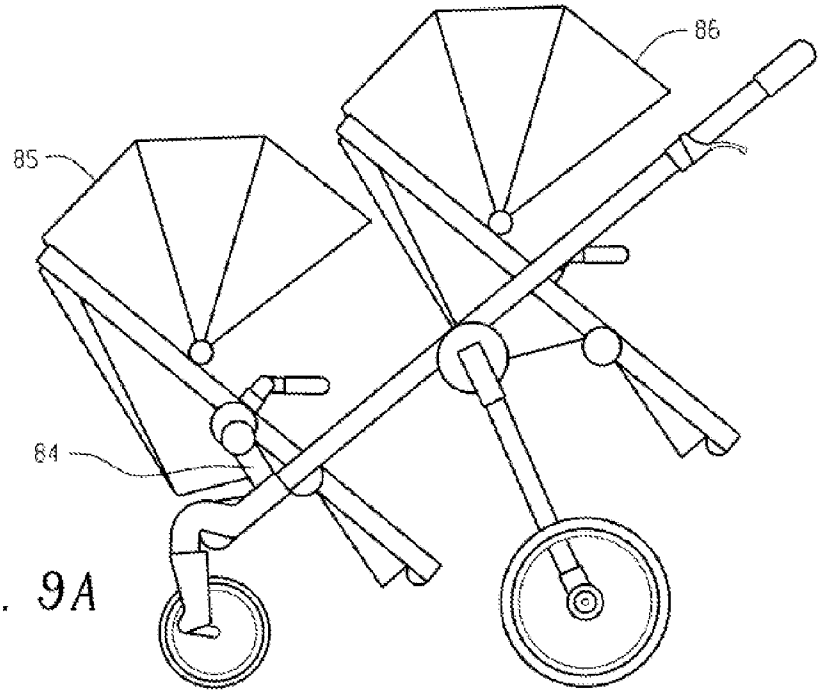

Fig. 9A

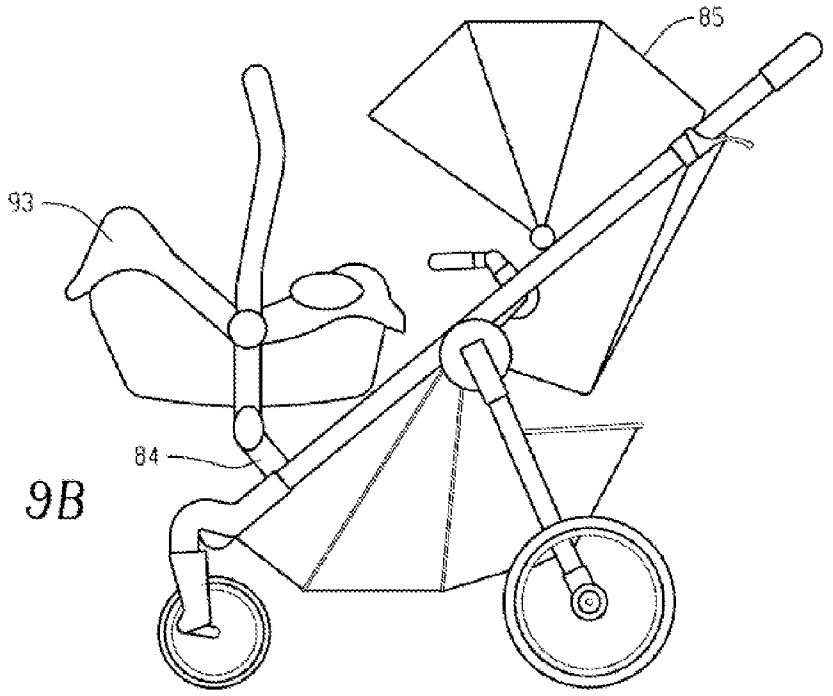

Fig. 9B

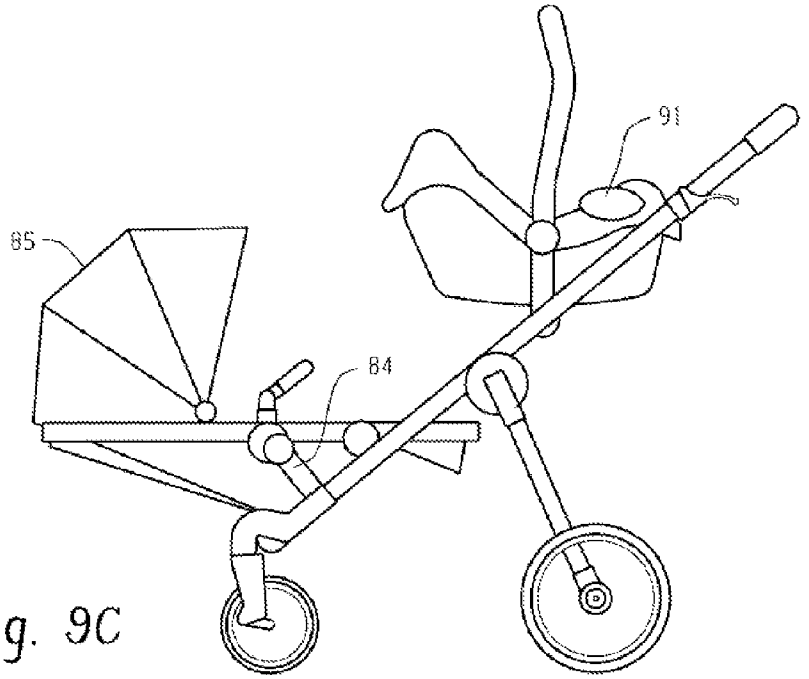

Fig. 9C

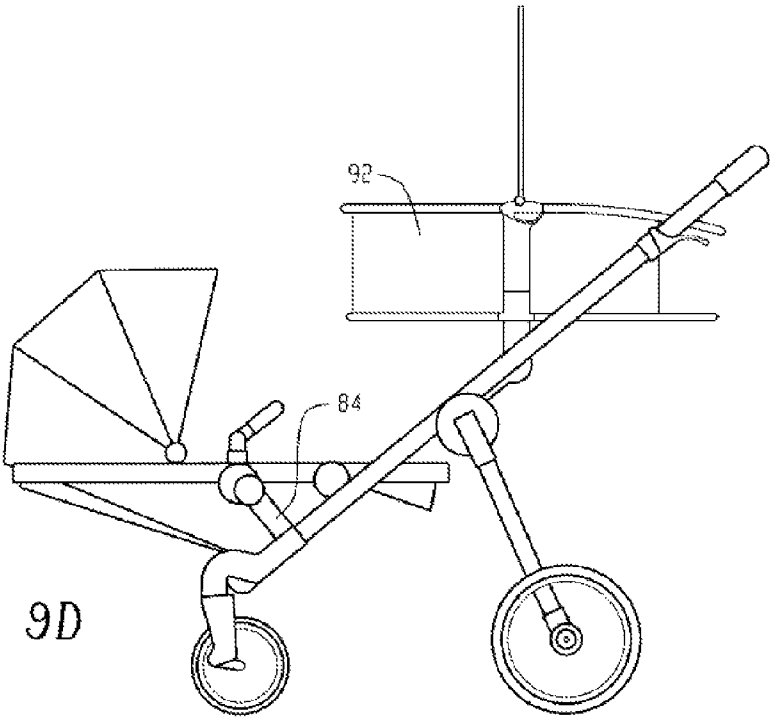

Fig. 9D

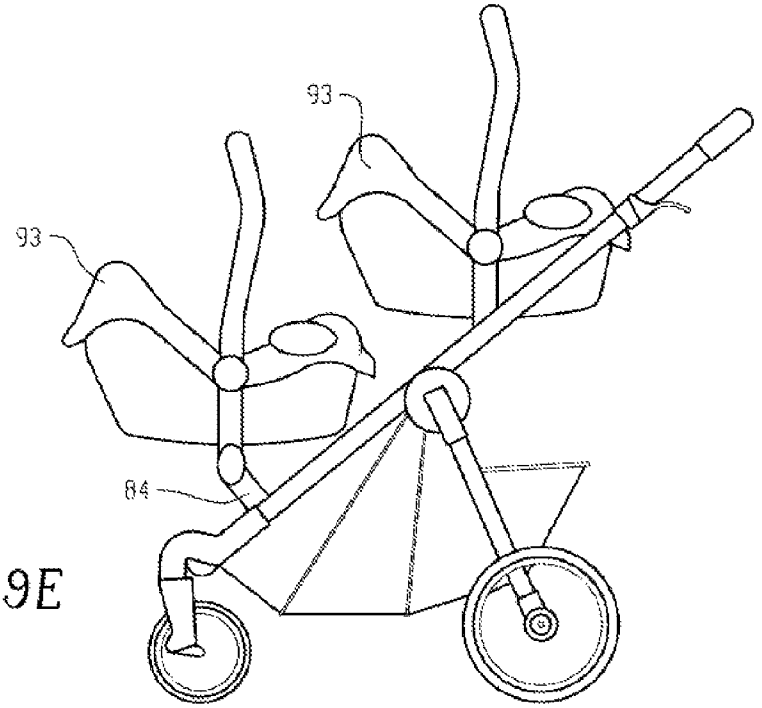

Fig. 9E

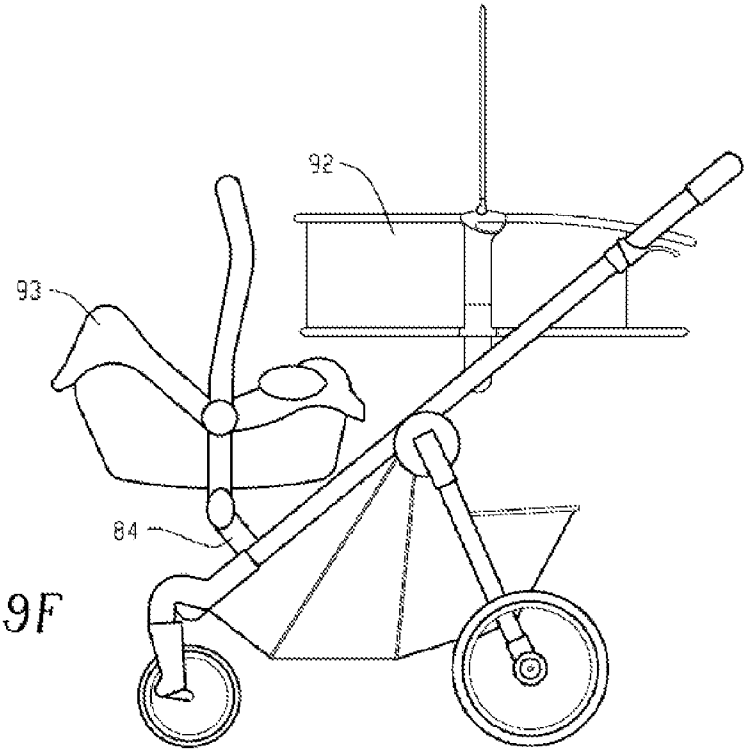

Fig. 9F

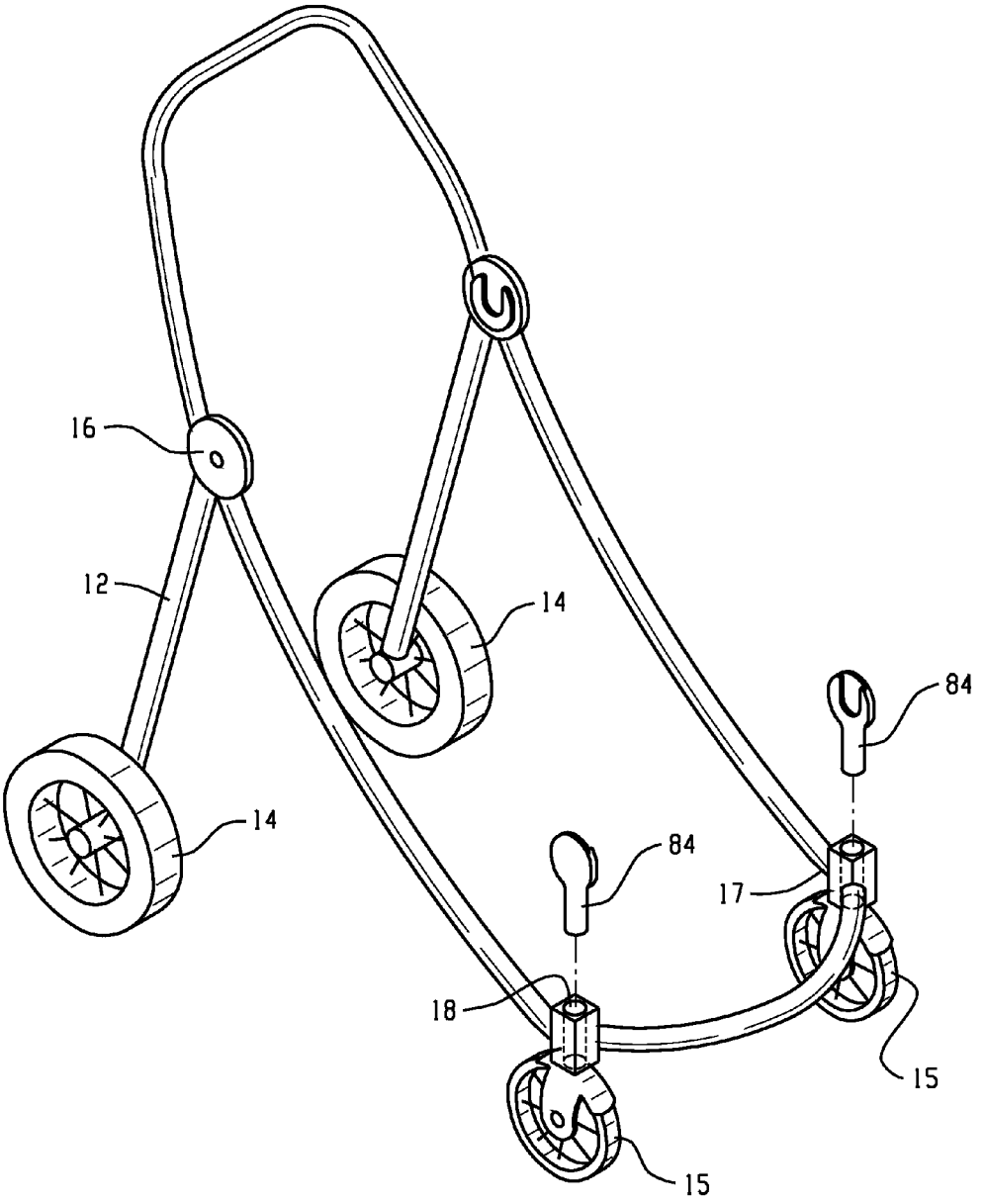

Fig. 10

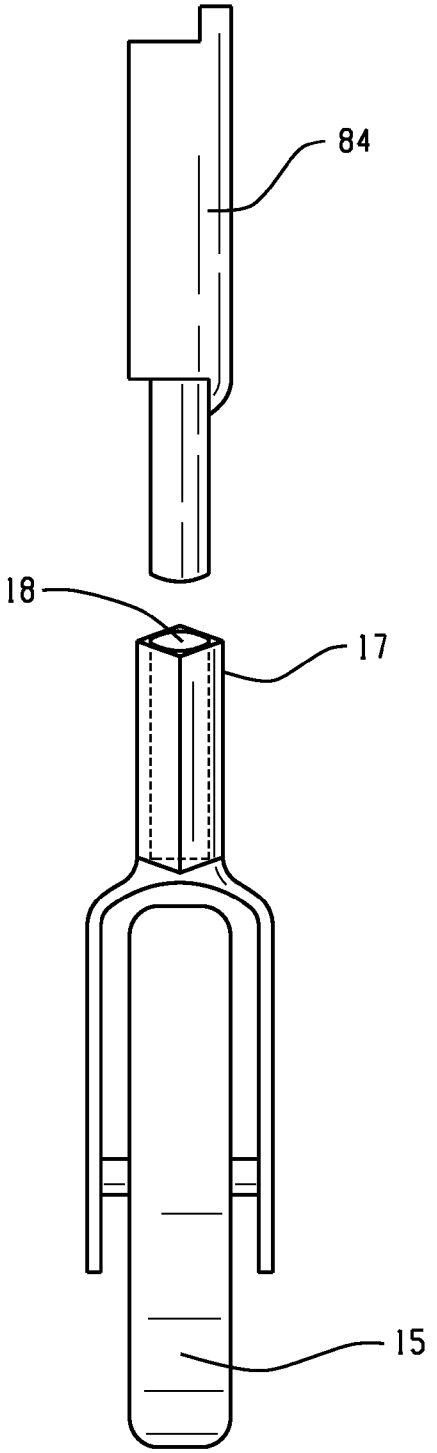

Fig. 11

SEAT ATTACHMENT FOR A STROLLER

RELATED APPLICATIONS

This U.S. patent application claims priority under 35 U.S.C. §120 to U.S. patent application Ser. No. 12/361,375 filed on Dec. 4, 2009 which claims priority to U.S. Provisional Patent Application Ser. No. 61/119,920 filed on Dec. 4, 2008 and both of which are hereby incorporated by reference in its entirety.

TECHNICAL FIELD

The invention is directed to a seat attachment for a stroller, single stroller and double strollers. Such a seat attachment may be used to convert a single stroller into a double stroller. More specifically, embodiments of the invention are directed to a seat attachment for a stroller capable of supporting a seat such as, but not limited to, a stroller seat, a baby seat, bassinet, a pram, a car seat, or a baby carrier, for example. Embodiments of the seat attachment are capable of reversibly converting a single stroller into a double stroller.

BACKGROUND

Parents with multiple young children may have difficulty transporting their children from place to place. Children are slow, easily distracted and, therefore, may lag behind their parents while the parents are trying to complete shopping tasks or get exercise in a limited amount of time. In response, many parents have purchased double strollers allowing the parent or other guardian to push two children simultaneously and thus allow them to more efficiently run errands, take walks, or jog. As such, a double stroller allows the parents or guardians more freedom than they would have with only a single stroller, especially while trying to manage two sleeping children.

Though double strollers have certain advantages, double strollers also have disadvantages. Double strollers are substantially larger than single strollers and are, therefore, more difficult to maneuver through doors and down aisles in stores. Typically, the benefits of being able to accommodate two children greatly offset these disadvantages. However, when the parent or guardian has only one child with them, the benefits of the double stroller are not realized but the disadvantages still exist.

Therefore, parents often buy two or more strollers to use at different times; a single stroller for times when they only have one child with them and a double stroller for when they need a stroller that will accommodate two children. This often creates its own set of problems. The multiple strollers must be stored and there is seldom room for both a folded double stroller and a folded single stroller in the trunk of a typical car or back of a sport utility vehicle.

Stroller manufacturers have attempted to solve this problem by providing a place for a second child to stand on the back of a single stroller or attachments that provide another seat for the second child that hangs under and slightly behind the seat of the single stroller. This provides a second seat for a child but the child is tucked close to the back of the front seat which may be uncomfortable, reduce the capacity of the under seat storage, and prevent the parent from hanging a bag on the handle bars.

There exists a need for a single stroller that may be conveniently converted to a double stroller. There is also a need for a conversion kit that converts the single stroller into a full double stroller that is capable of accommodating two children without loss of convenience for the parent or guardian.

SUMMARY OF THE INVENTION

Strollers are typically single strollers (strollers having one seat for transporting one child) or may also be double strollers (strollers having two seats for transporting two children). Embodiments of the invention are directed to a seat attachment for a stroller comprising a connector portion capable of connecting directly to a stroller frame or to an attachment frame member connected to the stroller frame; and a seat support element capable of supporting a seat. In certain embodiments, the attachment for a stroller comprises an attachment frame member having a first end and a second end. The first end may be capable of connecting the seat attachment to a stroller frame and the second end may be capable of connecting to the seat support element. The seat support element is thus capable of supporting a seat on the stroller. In more specific embodiments, the seat may be supported in either a forward or backward position.

Another embodiment comprises a stroller and seat attachment for the stroller, wherein the stroller comprises an attachment frame member connected to the frame of the stroller and the seat attachment for the stroller comprises a connector portion. The attachment frame member and the connector portion comprise components that are capable of being securely connected together. In certain embodiments, the attachment frame member and the connector portion comprise components that are capable of being securely and releasably connected together. In this manner, the seat attachment may be attached to the stroller and a seat, as defined above, may be connected to the seat attachment, thus reversibly converting the single stroller into a double stroller.

In a further embodiment, the seat attachment for the stroller further comprises at least one wheel. The wheel may be connected to the seat attachment by a wheel support frame which may be rigidly attached or may be pivotally attached to the seat attachment. The wheel support frame may be connected to any section of the seat attachment, preferably the wheel support frame is pivotally connected to the back portion of the seat attachment in an area adjacent to the connector portion or connected near the middle of the attachment portion.

Embodiments of the seat attachment for a stroller may further comprise a folding mechanism. The folding mechanism may comprise a sliding member slidingly connected to the attachment portion and a folding frame member or strut having a first end connected to the sliding member and a second end connected to the wheel support frame. The folding mechanism allows the wheel support frame to pivot from a first position (in-use position), to a second position (a folded position). The attachment for the stroller also may comprise a locking mechanism that secures the attachment to a stroller in the in-use position and unlocks the attachment to allow the attachment to be connected or removed from the stroller when in the folded position. The locking mechanism may be a small protrusion attached to the wheel support frame that engages a corresponding aperture in the stroller or the stroller attachment portion to secure the attachment to the stroller. In the folded position, the protrusion is not engaged in the aperture.

A further aspect is directed to a double stroller. The double stroller may comprise a frame, wherein the frame comprises a handle portion, a front wheel support portion, a back wheel support portion, and a folding mechanism. Embodiments of the double stroller comprise a stroller frame comprising wheels, the frame, a first seat and a connector portion con-

nected to the frame. The double stroller may further comprise a seat attachment frame comprising a wheel, a second seat, and a second attachment portion capable of connecting to the connector portion of the stroller frame. The second attachment portion may be releasably connected to the connector portion. Further, the second seat may be releasably connected to the seat attachment frame and is capable of supporting the second seat in either a forward or backward position.

A further embodiment of the double stroller comprises a first seat attachment capable of releasably supporting a first child seat and a second seat attachment capable of releasably supporting a second child seat. The seat attachments may comprise two seat connector portions for supporting the seat on both sides.

A still further embodiment of the double stroller comprises at least one first seat attachment adjacent to the front wheel support portion and a second seat attachment adjacent to each folding mechanism and/or the handle portion. The first seat attachment may be above at least one front wheel connected to the wheel support portion.

A still further embodiment of the stroller comprises a frame, at least one front wheel, at least one rear wheel, a first stroller seat with at least one first attachment portion permanently attached to the frame; and at least one releasably connected second seat attachment portion capable of supporting a second seat in front of the first stroller seat. As in other embodiments, the seat attachment may comprise two seat connectors. Either or both seat attachment portions may be a single part with two seat connectors or two separate pieces each comprising a seat connector.

In any of the above embodiments, the stroller, double stroller or attachment may comprise one or more of the following features; a sleeve for removably receiving the attachment portion. The seat attachment portion may comprise a protrusion having a complementary shape to the sleeve for inserting into the sleeve. Further, the second seat may be integral to the seat attachment.

Aspects of the stroller, double stroller and attachment are presented in various embodiments, however one skilled in the art will understand various variation and interchangeability of the components of the various embodiments which are intended to be included in the scope of the invention.

BRIEF DESCRIPTION OF THE FIGURES

FIG. **1** shows an embodiment of a single stroller;

FIG. **2** shows an embodiment of a seat attachment to convert a single stroller into a double stroller;

FIG. **3** shows the combination of the single stroller of FIG. **1** attached to the seat attachment of FIG. **2**;

FIG. **4** shows an embodiment of a seat attachment capable of supporting a car seat on an attachment of FIG. **2**;

FIG. **5** shows a combination of the single stroller of FIG. **1** attached to an embodiment of the attachment in the form of a tricycle-like riding device;

FIG. **6**A shows an accessory attachment for supporting an accessory on a stroller; FIG. **6**B shows a bag or purse for attaching to the accessory attachment of FIG. **6**A;

FIG. **7** shows an attachment for supporting a seat comprising one wheel;

FIGS. **8** and **8**A show an embodiment of a stroller that is capable of being converted from a single stroller to a double stroller comprising an attachment portion that does not comprise a wheel;

FIGS. **9**A, **9**B, **9**C, **9**D, **9**E, and **9**F show various configurations of the embodiments of the stroller shown in FIG. **8**;

FIG. **10** shows a stroller with left and right attachment frame members for attaching a second seat; and

FIG. **11** shows an attachment frame member with a cylindrical post to be received in a slot in a stroller frame.

DESCRIPTION

The invention relates to an accessory, attachment, or conversion kit (hereinafter "seat attachment") for a stroller. As discussed above, parents or guardians may find themselves in a situation wherein it is more convenient to transport two children in a stroller, but at the same time find it inconvenient to have both a single stroller and double stroller. Embodiments of the seat attachment solve this problem. In one aspect, an embodiment of the seat attachment for a stroller is capable of converting a single stroller into a double stroller. The seat attachment may support a seat such as, but not limited to, a stroller seat, a baby seat, a bassinet, a pram, a baby carrier, or a car seat, for example. Therefore, the parent or guardian does not require both a single stroller and a double stroller. A stroller configured to receive a seat attachment for converting a single stroller into a double stroller provides convenience to the user. The single stroller may be connected to a double stroller by attaching the seat attachment to the single stroller and then attaching the second seat. As such, an embodiment of the seat attachment for converting a single stroller into a double stroller comprises at least one connector portion capable of connecting to a stroller frame and a seat support element capable of supporting a seat. The seat attachment may optionally comprise at least one wheel for additional support and stability, however, for more convenience, embodiments of the attachment do not include a wheel. In certain embodiments, a wheel may stabilize the double stroller, but in other embodiments of the attachment the wheel may not be desirable or necessary. Additional embodiments of the attachment comprise a cart, wagon, tricycle-like attachment, or other riding toy that may be connected to the stroller, for example. A tricycle-like attachment would allow a child to ride or be pushed in front of the stroller.

A side view of an embodiment a single stroller **10** is shown in FIG. **1**. As a note, FIG. **1** shows only one side of the single stroller **10**, however, most components include a complementary component on the other side of the single stroller but are not shown in FIG. **1**. The single stroller **10** comprises a frame **12** that supports seat **13**. The frame **12** may, optionally, include at least one, preferably two, folding mechanism **16** that allows the stroller **10** to be folded to a more convenient size for storing or transporting the stroller **10**.

In this embodiment, the seat **13** is shown as a typical stroller seat, however, other types of seats may be used in a single stroller. The seat **13** may be permanently affixed to the frame **12** or releasably connected such that it is capable of being removed and substituted with a different seat. As used herein, "releasably connected" or "releasably attached" means the connection is not a permanent connection and that the connection is capable being of connected and disconnected by the user of the stroller without requiring special tools or special skills. Releasable connections include, but are not limited to, buttons, snaps, friction fittings, interference fits, threaded connections, locking tabs, keyed connections, other fasteners, or the like. On stroller **10** of FIG. **1**, the frame **12** is supported on a pair of back wheels **14** and a pair of front wheels **15**. In this embodiment, back wheels **14** are fixed and do not swivel or pivot on the frame. The pair of front wheels **15** on the single stroller **10** pivot to make turning the single stroller **10** easier and more convenient. Though, pivoting wheels may be preferred in certain strollers, strollers with

fixed non-pivoting wheels are also common. It should be noted that a single stroller does not require pairs of front or rear wheels and either the front pair of wheels **15** or the back pair of wheels **14** may be substituted with a single wheel. Conventionally, many single strollers, including umbrella strollers, jogging strollers, all-terrain strollers, as well as other strollers may only include one front wheel. Embodiments of the seat attachment of the invention may be capable of converting any style of stroller to a double stroller, including strollers with one or two front wheels.

The embodiment of the stroller **10** comprises two attachment portions **17**. The connector portions are preferably on the front of the stroller to allow the seat attachment and the seat to be connected to the front of the stroller **10**. The attachment portions **17** allow a seat attachment such as the seat attachment for converting the single stroller **10** to a double stroller, as shown in FIG. **3**, to be connected to the stroller. Only one seat attachment is shown in FIG. **3**, the stroller **10** would use two seat attachments as shown in FIG. **3** or one seat attachment comprising two seat support elements. The embodiment of the stroller **10** has a left side and right side attachment portions **17**. An embodiment of a seat attachment of stroller **10** will comprise corresponding connector portions capable of connecting to the stroller frame at the attachment portions **17**. Though the seat attachment for the stroller is described in relation to a single stroller, the attachment may similarly be attached to a double stroller. Embodiments of the seat attachment may therefore be used to convert a double stroller into a triple stroller, if desired.

An embodiment of a seat attachment **20** of the invention is shown in FIG. **2**. The seat attachment of FIG. **2** is in an unlocked and folded configuration. The seat attachment **20** comprises a pair of connector portions **21** capable of connecting to the attachment frame members **24**, two seat attachment elements **22** capable of supporting a seat; and a wheel **23**. In this embodiment, the connector portions are connected to the rear of the seat attachment **20** allowing the seat attachment **20** to be connected to the front of a stroller, such as stroller **10** shown in FIG. **1**. Other embodiments of the seat attachment may include more than one wheel, one connector portion, one seat support element, or combinations of these elements. In an embodiment of the stroller with one wheel, the attachment frame member may be on the forks of the front wheel, for example.

The seat attachment **20** comprises a wheel support frame **26** connecting the wheel **23** to the attachment frame member **24** of the attachment **20**. Each attachment frame member **24** has a first and a second end. The first end is capable of connecting to a stroller frame and the second end is connected to the seat support element **22**. The embodiment of the seat attachment **20** comprises a wheel support frame **26** that is pivotally connected to two attachment frame members **24**. The wheel support frame **26** or the attachment frame **24** may span the width of the stroller between the two attachment portions **17**. The pivotal connection **27** allows the seat attachment to be folded and conveniently stored or transported but is not necessary for the invention. The pivotal connection is optional and provides more convenience, however, embodiments of the attachment may comprise a releasably connected wheel support frame or a rigid frame that may be incorporated to produce a seat attachment that has greater strength for use in situations wherein a stronger seat attachment may be desired such as with all-terrain or jogging strollers, for example. The wheel support frame may be connected at any point on the attachment frame, preferably the wheel support frame is connected near the connector portion **21** or near the middle of the attachment frame **24**.

An embodiment of the seat attachment without a wheel may include connector portion **21** or attachment frame member **24**, and seat attachment member **22**, for example. In such an embodiment, there would be no need for pivotal connection **27**, wheel support frame **26**, sliding connector **25**, or wheel **23**. FIG. **1**A shows a top view of an embodiment of an attachment portion and FIG. **2**A shows a cross-sectional view of an embodiment of a connector portion

The seat attachment **20** comprises a folding mechanism comprising a sliding connector **25** connected to a first end of strut **28**. A second end of strut **28** is pivotally connected to wheel support frame **26**. In such an embodiment, the sliding connector **25** may be moved between a first position and a second position on the attachment frame member **24**. As the sliding connector **25** is moved, strut **28** pushes the wheel support frame **26** from an in-use position to a storage position. The storage position is more compact as shown in FIG. **2**. In addition, the embodiment of the seat attachment **20** comprises a locking mechanism **27** that is capable of securing the seat attachment **20** to a stroller, such as stroller **10** shown in FIG. **1**. The locking mechanism **29** is engaged by moving the sliding connector **25** to the in-use position in which the wheel support frame **28** and wheel **23** are extended. In an embodiment of the seat attachment **20** for the stroller **10**, the wheel of the seat attachment **20** is pivotally connected to the connector portion and when the wheel is in the in-use position the releasable connection is locked and when the wheel **23** is moved to the storage position, the releasable connection is unlocked allowing the seat attachment **20** to be removed from stroller **10**. The seat attachment **20** may be stored and stroller **10** may be conveniently used as a single stroller. As designed, the seat attachment **20** may be reconnected to stroller **10** for use as a double stroller. In any embodiment of the invention, the seat attachment portion may be secured into position on the stroller frame and a locking mechanism may be used with an embodiment with or without the wheel. Either the seat attachment or the stroller frame may comprise a locking mechanism for securing the stroller and seat attachment together. The locking mechanism may be any mechanism capable of securing the components together during use and may be a friction locking device, threaded connection, peg in a hole, or an interference locking device such as a pin in a hole or, for example. In embodiment **20** shown in FIG. **2**, the locking mechanism **29** pivots with wheel support frame **26** as the attachment **20** is moved from an unfolded position to a folded position. The locking mechanism **29** may slide into a hole or notch in the attachment frame member of stroller **10** shown in FIG. **1**. As such, the attachment **20** may be attached to stroller **10** by positioning attachment portion **21** of attachment **20** in slot **18** of attachment portion **17** of stroller **10**. The sliding connector **25** may be moved to the in-use position, wheel support frame is moved and locking mechanism **29** is positioned into locking slot **19** of stroller **10**.

The connector portion **21** of the embodiment of the seat attachment **20** has a cylindrical shape. The connector portion **21** may be inserted into a cylindrical slot **18** of the attachment portion **17** of stroller **10** of FIG. **1** to secure the seat attachment and convert the single stroller into a double stroller, as shown in FIG. **3**. Other embodiments of the seat attachment may include any type of connector portion. The connector portion may be of a solid or tubular construction and may be any cross-sectional shape including, but not limited to, circular, polygonal, square, rectangular, and triangular, for example. Other attachment mechanisms may be utilized to connect the seat attachment to the stroller such as, but not limited to, a U-shaped bracket, a U-bolt, a pipe clamp, O-shaped bracket, screw, bolt, or other clamping or attach-

ment means. The attachment frame member of the stroller has a complimentary and cooperating shape that allows the connector portion to be secured to the attachment portion of the stroller.

In FIG. **3**, the seat attachment **20** of FIG. **2** is shown connected to the single stroller **10** of FIG. **1** forming a double stroller. The double stroller configuration is shown with two stroller seats **13** in an inline configuration, though the other configurations, such as a stroller seat and a bassinet or a pram may also be supported on the double stroller. Further, the seat support element of the seat attachment may be capable of supporting the front stroller seat in either a forward or backward position.

The embodiment of the stroller **10** is shown only as an example of one type of stroller, the frame of the stroller may be any of many possible configurations. Embodiments of the accessory of the invention may be configured to be used on any such configuration of a stroller. For example, a different embodiment of the baby stroller may not include two front wheels, may not include a folding mechanism or may only include only one folding mechanism. In addition, the baby stroller may include additional features not included in baby stroller **10**. For example, the stroller may optionally comprise fixed front wheels, an entirely different frame configuration, or a storage basket underneath the seat of the stroller.

The seat support member may be any configuration capable of supporting the seat on the seat attachment. Another embodiment of a seat support member for use with a car seat or other baby seat is shown in FIG. **4**. The embodiment of the seat support member **40** of FIG. **4** comprises a main support **41**. The main support **41** comprises a cradle for supporting a central portion of the seat. Another portion of the seat may rest against support bar **42**. In this embodiment, support bar **42** may be adjusted to accommodate seats of different shapes and sizes. Support bar **42** may be slid within aperture **43** and locked in place when in the desired position to support a certain seat. The seat is, therefore, supported on two main supports **41** and support bar **42**. The seat may be further secured in the seat attachment member **40** by wrapping belts **44** and **45** around the seat and locking the belts in this position with a buckle or other securing means.

Another embodiment of a seat attachment for a stroller is shown in FIG. **5**. The combination **50** comprises stroller **10** and seat attachment **51**. Seat attachment **51** is a tricycle-like attachment comprising a connector portion **52**, a frame **53** with a seat support element **56**, a seat **57**, and wheel **55**. The tricycle-like attachment may be attached to stroller **10** to allow one child to be pushed in the stroller **10** and one child to ride the seat attachment **51**. The seat attachment may be other shapes also such as cars, trucks, or animal shapes, for example.

The embodiment of the stroller **10** of FIG. **5** comprises an additional accessory attachment portion **58**. The accessory attachment portion **58** attaches to a frame member of stroller **10**. An embodiment of the accessory attachment portion **58** is shown on FIG. **6**A. This embodiment is particularly useful for attaching a bag or purse **64**, as shown in FIG. **6**B, to stroller **10**.

When using a stroller, parents or guardians typically carry other items, such as purses, grocery bags, cell phones, diapers, cleaning wipes, or other personal or baby related items. Some strollers have bottom storage baskets for placing such items. However, these storage baskets can be inconvenient to access or some light weight strollers do not include such storage. Therefore, users of the stroller may hang purses or shopping bags on the handle of the stroller. This is convenient in that the bag is easy to access, but the weight of the bag on the handle may cause the stroller to be unbalanced and increase the tendency of the stroller to topple backwards. A heavy bag hung from the handle of a stroller may cause the stroller to tip backwards even with a child in the seat. The problem is worse if the stroller is facing uphill, on uneven terrain, being pushed up a curb, or occupied by a small child. The attachment portion may be attached to the frame of a stroller by any of the clamping or attachment methods described above, for example. Preferably, accessory attachment **58** is attached near the center of gravity of the stroller **10** to avoid creating an unbalanced condition of the stroller. An embodiment of the accessory attachment **58** is shown in FIG. **6**A. Accessory attachment **58** is shown connected to stroller frame **12** of stroller **10** in FIG. **1** near the folding mechanism. Embodiments of the accessory comprise a first end **61** for connecting to a stroller frame and a second end **62** for releasably connecting to the accessory. The first end **61** comprises an aperture **64** that may be connected to frame **12** of the stroller **10**. In certain embodiments, the aperture **64** is on an angle—such that when the axis of the accessory attachment portion **58** is substantially horizontal. The accessory attachment **58** may, optionally, comprise a rib for securing the accessory to the accessory attachment **58**. The rib as shown in FIG. **6**A may be replaced with any other locking element or securing means including a friction fitting, a screwed fitting, interference fitting, for example.

One example of an accessory for attaching to an accessory attachment **58** is shown in FIG. **6**B. The accessory is a bag or purse **64**. The accessory includes an attachment portion **65** that is capable of being secured to the attachment portion **62** on the accessory attachment **58**. The bag or purse **64** may be secured on stroller **10** by securing attachment portion **65** to attachment portion **62**. The attachment portion **65**, as shown, slides over the cylindrical attachment portion **62** of accessory attachment **58**. Attachment portion **65** may include an interior annular recess that receives rib **63** securing the bag or purse **58** to stroller **10**. The bag or purse **64** is thus secured to the stroller **10** in a center portion of the stroller as viewed from the side. Therefore, the bag or purse **64** is conveniently secured to stroller **10** while not contributing to an unbalanced condition of the stroller **10**.

Another embodiment of the seat attachment **70** comprises two seat attachment members **71**, two connector portions **72** and a wheel **73**. The two seat attachment members and the wheel are in triangular relationship. The wheel **73** provides additional stability to a stroller connected to the seat attachment **70** if a heavier child is placed in a seat attached to the seat attachment members.

A further embodiment of the stroller **80** is shown in FIG. **8**. Stroller **80** may be easily converted from a single stroller comprising one seat to a double stroller comprising two seats without addition of another wheel on the attachment. Stroller **80** comprises a frame **81** capable of supporting the stroller seat **86**. In this embodiment, the frame **81** comprises a front wheel support portion **81***a*, a back wheel support portion **81***b*, and a handle portion **81***c*. The frame **81** of the embodiment of the stroller **80** further comprises a folding mechanism **81***d* that connects front wheel support portion **81***a*, a back wheel support portion **81***b*, and a handle portion **81***c*. The folding mechanism **81***d* allows the stroller to be folded in a more compact size for storing or transportation. FIG. **8**A shows stroller **80** in a folded configuration.

Stroller **80** further comprises at least one front wheel **82** (both front wheels **82** of stroller **80** may be seen in FIG. **8**A), at least one rear wheel **83** (both rear wheels **83** of stroller **80** may be seen in FIG. **8**A), a stroller seat **86**, and a seat support portion **84** capable of supporting a second seat in front of the

stroller seat. The stroller **80** may further comprise a storage basket **87**. Seat support portion may be of any design capable of securely supporting a seat on the stroller. For example, the seat support portion **84** may be similar to seat support portion **20** shown in FIG. **2** without the wheel **23**, the strut **28**, pivotal connection **27**, and/or the wheel support frame **26**. Preferably, the seat support portion is capable of supporting a seat such that a child in the seat is substantially above the frame of the stroller. This provides easier access to the seat, does not block access to the storage basket, allows more versatile configurations of the seats, allows more variety of seats to be attached to the frame, and allows the parent or other guardian to more easily monitor and see the child in each seat.

Stroller **80** comprises a stroller seat **86**. The stroller seat **86** is located adjacent to handle portion. The stroller seat **86** may be fixedly attached or removably attached to frame **81**. In embodiments of the stroller **80** wherein stroller seat **86** is removably attached to frame **81**, the stroller seat **86** may be removed and replaced in a backward facing configuration with a second stroller seat **85** connected with seat attachment **84**, see FIG. **9**A, the second stroller seat be replaced by a infant carrier **93** and the stroller seat facing forward, see FIG. **9**B or the child carrier **91** may be positioned in the first seat position and the stroller seat **85** in the second seat position, see FIG. **9**C, or the child carrier **91** may be replaced with a pram **92**, see FIG. **9**D. In another configuration of the double stroller, two child carriers **93** may connected to the stroller frame **81**, see FIG. **9**E, or one of the child carriers **93** may be replaced with a pram or bassinet **92** as shown in FIG. **9**F. Embodiments of the stroller **80** may comprise a second seat support element **89** adjacent to the handle portion. A stroller **80** comprising a second seat support element **89** allows the seat to be easily removed and reconfigured to a different orientation or replaced with a different style seat as shown in FIGS. **9**A to **9**F.

Embodiment of the stroller **80** comprises a first seat support element **84**. The seat support element **84** is connected to the stroller **80** front wheel support frame **81***a*. The seat support element **84** is adjacent to the front wheel support portion **81***a* of frame **81**. The seat support element is capable of supporting a second stroller seat **85** in front of the stroller seat **86**. This provides convenience and versatility to a user of stroller **80**. Seat support element may be fixedly attached or removably attached to front wheel support portion **81***a*. The front seat **85** may be positioned substantially over the front wheels so the stroller remains stable. Preferably, the seats should be positioned such that the center of gravity of the stroller is between the front and rear wheels. If not an additional wheel may be placed on the attachment as previously described. Seat support element **84** comprises a seat connector **88**. Seat connector **88** may be a multipurpose general connector that allows different seats to be interchanged on the seat support element **84**. Any style seat may be configured to connect to the seat connector, such as but not limited to, a stroller seat, a baby seat, a bassinet, a pram, a baby carrier, or a car seat, for example.

An embodiment of the stroller attachment comprises a connector portion, and a seat support element. The connector portion is capable of connecting the seat attachment to the frame.

In the embodiment shown in FIG. **8**, stroller **80** comprises a first stroller seat **86** and a second stroller seat **85**. Stroller seat **86** is shown in the forward facing configuration and second stroller seat **85** is shown in a backward facing configuration. The seat support element **84** is capable of supporting the seat above the front wheel **82** connected to the wheel support portion **81***a*. Preferably, the front seat is located substantially over the front wheels and the back seat is located substantially over the rear wheels.

Though it can not be seen in the side view of FIG. **8**, a typical embodiment of the stroller will comprise two seat connector portions. One seat connector portion will support each side of the seat. The connector portion may be one piece or multiple parts.

FIGS. **9**A through **9**F show various configurations that are possible with the stroller of the invention. These configurations are not to be considered to be all available configurations of the stroller and one skilled in the art would recognize many additional possibilities based upon this specification and set of drawings. From the foregoing it will be appreciated that, although specific embodiments of the invention have been described herein for purposes of illustration, various modifications may be made without deviating from the spirit and scope of the invention. Accordingly, the invention is not limited except as by the appended claims.

The invention claimed is:

1. A seat attachment for a stroller, comprising:

a separate left attachment portion, wherein the left attachment portion comprises:

a connector portion capable of removably connecting to a stroller frame adjacent a left front wheel of the stroller and a left seat support element removably connecting a seat in either a forward or backward position; and

a separate right attachment portion, wherein the right attachment portion comprises:

a connector portion capable of removably connecting to a stroller frame adjacent a right front wheel of the stroller and a right seat support element removably connecting the seat in either a forward or backward position between the left and right support elements.

2. The seat attachment for a stroller of claim **1**, wherein the seat is a baby seat, a car seat, a stroller seat, a bassinet, or a pram.

3. The seat attachment for a stroller of claim **1**, wherein each attachment portion has a first end and a second end.

4. The seat attachment for a stroller of claim **3**, wherein the first end is capable of connecting to the stroller frame.

5. The seat attachment for a stroller of claim **4**, wherein the second end is connected to the seat.

6. A stroller, comprising:

a frame;

two front wheels;

at least one rear wheel;

a stroller seat; and

two attachment frame members connected to the frame adjacent to the front wheels, wherein the attachment frame members are capable of removably receiving and supporting separate right and left seat attachment portions, wherein each of the seat attachment portions comprises a connector portion for removably connecting to the attachment frame member and a seat support element for removably connecting a stroller seat between the seat attachment portions.

7. The stroller of claim **6**, wherein the attachment frame members comprise a slot for removably receiving the connector portion of the seat attachment portion.

8. The stroller of claim **6**, wherein the frame of the stroller is capable of supporting a second seat and the second seat is selected from a stroller seat, an infant carrier, a bassinet, a pram, or a car seat.

9. A stroller, comprising:

a first stroller seat reversibly and removably connected to a stroller frame having a left front wheel and a right front wheel;

two attachment frame members attached to the stroller frame, wherein one attachment frame member is connected adjacent to the left front wheel and the other attachment frame member is connected adjacent to the right front wheel, and

separate left and right seat attachment portions for converting the stroller into a double stroller, the seat attachment comprising:

a connector portion capable of removably connecting to one of the attachment frame members above a respective front wheel of the stroller, and

a seat support element removably connecting a second stroller seat in either a forward or backward position.

10. The stroller of claim **9**, wherein the first stroller seat is releasably connected in a backward position.

11. The stroller of claim **10**, wherein the second stroller seat is one of a stroller seat, a car seat, or a bassinet.

12. The stroller of claim **9**, wherein the second seat is a bassinet or a car seat.

13. The stroller of claim **9**, wherein the frame further comprises two folding mechanisms.

14. The stroller of claim **10**, wherein the first seat comprises a releasable connection including a button or a locking tab.

15. The stroller of claim **12**, comprising a pair of back wheels.

16. The stroller of claim **15**, wherein the front wheels pivot and the back wheels are fixed.

17. The stroller of claim **9**, wherein one of the two attachment frame members is a right side attachment frame member and the other attachment frame member is a left attachment frame member.

18. The stroller of claim **9**, wherein each of the connector portions has a cylindrical shape.

19. The stroller of claim **18**, wherein the attachment frame member has a cylindrical slot.

20. The stroller of claim **19**, wherein the connector portion of the seat attachment portion is inserted in the cylindrical slot.

21. The stroller of claim **9**, wherein the connector portion is tubular construction.

22. The stroller of claim **9**, wherein the connector portion has a circular cross-sectional shape.

23. The stroller of claim **9**, wherein the connector portion has a complementary and cooperating shape that allows the connector portion to be secured to the attachment portion.

24. A seat attachment for a stroller, comprising:

a left seat attachment portion, wherein the left seat attachment portion comprises: a connector portion capable of removably connecting to a stroller frame adjacent a left front wheel and a left seat support element removably connecting a seat in either a forward or backward position; and

a right seat attachment portion, wherein the right seat attachment portion comprises: a connector portion capable of removably connecting to the stroller frame adjacent a right front wheel and a right seat support element removably connecting the seat in either a forward or backward position between the left and right seat support elements.

25. The seat attachment for a stroller of claim **24**, wherein the seat is a baby seat, a car seat, a stroller seat, a bassinet, a baby carrier, or a pram.

26. The seat attachment for a stroller of claim **24**, wherein each of the left and right seat attachment portions has a first end and a second end.

27. The seat attachment for a stroller of claim **26**, wherein the first end is capable of directly connecting to a stroller frame.

28. The seat attachment for a stroller of claim **27**, wherein the second end is connected to the seat.

29. The seat attachment for a stroller of claim **24**, further comprising a stroller seat connected to the left seat support element and the right seat support element.

30. The seat attachment for a stroller of claim **24**, wherein both connector portions reversibly connects to the stroller by at least one of buttons, snaps, friction fittings, interference fits, threaded connections, locking tabs, or keyed connections.

* * * * *