US011192568B2

(12) **United States Patent**
Lee et al.

(10) **Patent No.: US 11,192,568 B2**
(45) **Date of Patent: Dec. 7, 2021**

(54) **REMOVABLE SEAT ATTACHMENT FOR A STROLLER**

(71) Applicant: **BABY JOGGER, LLC**, Richmond, VA (US)

(72) Inventors: **Jon Hee Lee**, Highwood, IL (US); **Megan Roe**, Kalamazoo, MI (US); **Stacy Noel Simpson**, Portage, MI (US); **Mark Zehfuss**, Glen Allen, VA (US)

(73) Assignee: **BABY JOGGER, LLC**, Richmond, VA (US)

(*) Notice: Subject to any disclaimer, the term of this patent is extended or adjusted under 35 U.S.C. 154(b) by 0 days.

(21) Appl. No.: **16/832,429**

(22) Filed: **Mar. 27, 2020**

(65) **Prior Publication Data**

US 2020/0223470 A1 Jul. 16, 2020

Related U.S. Application Data

(63) Continuation of application No. 15/912,901, filed on Mar. 6, 2018, now Pat. No. 10,730,543, which is a (Continued)

(51) **Int. Cl.**
B62B 9/28 (2006.01)
B62B 9/10 (2006.01)
(Continued)

(52) **U.S. Cl.**
CPC ***B62B 9/102*** (2013.01); ***B62B 7/006*** (2013.01); ***B62B 7/008*** (2013.01); ***B62B 7/14*** (2013.01);
(Continued)

(58) **Field of Classification Search**
CPC B62B 7/008; B62B 7/00; B62B 7/006; B62B 7/14; B62B 7/142; B62B 7/145; B62B 9/12; B62B 9/28; B62B 9/102
See application file for complete search history.

(56) **References Cited**

U.S. PATENT DOCUMENTS

1,707,186 A 3/1929 Chatfield
3,000,645 A 9/1961 Schmidt
(Continued)

FOREIGN PATENT DOCUMENTS

CN 2784272 Y 5/2006
CN 1978264 A 6/2007
(Continued)

OTHER PUBLICATIONS

Office Action issued in Chinese Application No. 201710169826.4, dated Oct. 31, 2018, 11 pages.
(Continued)

Primary Examiner — James M Dolak
(74) *Attorney, Agent, or Firm* — Eversheds Sutherland (US) LLP

(57) **ABSTRACT**

A stroller is provided with the ability to removably couple and decouple a seat from the stroller as needed. The stroller can include a stroller frame. The stroller can also include one or more front wheels attached to the stroller frame and one or more rear wheels attached to the stroller frame. The stroller can also include a first seat couple to the stroller frame. The stroller can include first and second seat attachment housings. Each of the seat attachment housings can include a cavity for receiving a corresponding one of the first and second seat attachment adapters. Each of the seat attachment housings can also include a door or cover to prevent access to the respective cavity when not in use. The seat attachment adapters can be coupled to the respective seat attachment housings and a second seat can be coupled to the seat attachment adapters.

20 Claims, 18 Drawing Sheets

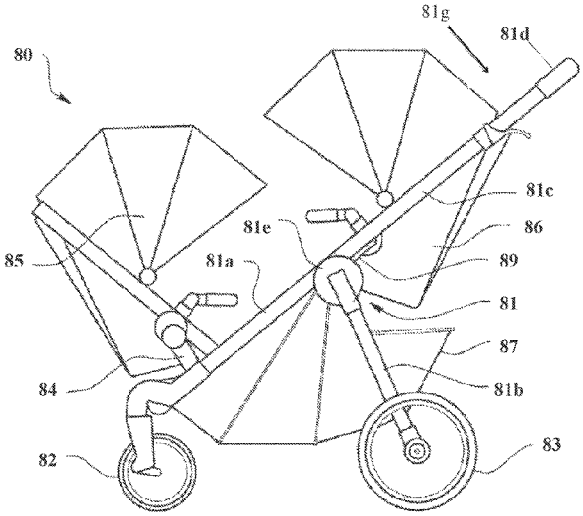

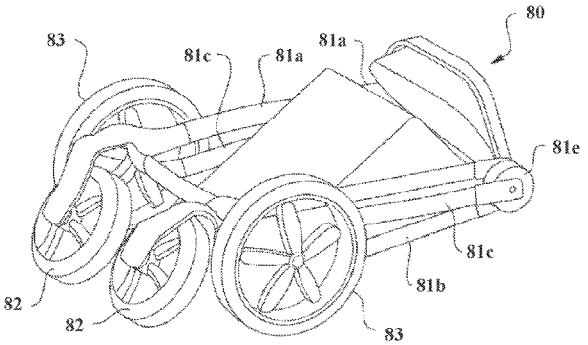

Related U.S. Application Data

continuation of application No. 15/225,326, filed on Aug. 1, 2016, now Pat. No. 9,944,305, which is a continuation-in-part of application No. 14/597,420, filed on Jan. 15, 2015, now Pat. No. 9,403,550, which is a continuation of application No. 14/261,558, filed on Apr. 25, 2014, now Pat. No. 8,955,869, which is a continuation of application No. 12/631,375, filed on Dec. 4, 2009, now abandoned.

(60) Provisional application No. 62/311,224, filed on Mar. 21, 2016, provisional application No. 61/119,920, filed on Dec. 4, 2008.

(51) **Int. Cl.**

B62B 7/00	(2006.01)
B62B 7/14	(2006.01)
B62K 27/00	(2006.01)
B62K 5/02	(2013.01)
B62M 1/38	(2013.01)
B62B 9/12	(2006.01)
B62B 3/00	(2006.01)
B62K 13/00	(2006.01)

(52) **U.S. Cl.**

CPC ***B62B 9/12*** (2013.01); ***B62B 9/28*** (2013.01); ***B62K 5/02*** (2013.01); ***B62K 27/003*** (2013.01); ***B62M 1/38*** (2013.01); *B62B 3/008* (2013.01); *B62B 7/145* (2013.01); *B62K 13/00* (2013.01)

(56) **References Cited**

U.S. PATENT DOCUMENTS

4,542,915	A	9/1985	Wheeler, III et al.	
5,201,535	A	4/1993	Kato et al.	
5,338,096	A	8/1994	Huang	
5,567,008	A	10/1996	Richard	
6,045,145	A	4/2000	Lan	
6,086,087	A *	7/2000	Yang	B62B 7/06 280/47.41
6,209,892	B1	4/2001	Schaaf et al.	
6,267,406	B1 *	7/2001	Huang	B62B 7/08 280/47.38
6,286,844	B1 *	9/2001	Cone, II	B62B 9/28 280/47.41
6,378,892	B1	4/2002	Hsia	
6,443,467	B1	9/2002	Black	
6,513,827	B1	2/2003	Barenbrug	
6,561,526	B1	5/2003	Towns	
6,585,284	B2 *	7/2003	Sweeney	B62B 9/28 280/33.993
6,676,140	B1	1/2004	Gondobintoro	
6,752,405	B1	6/2004	Wright	
6,851,693	B2	2/2005	Haeggberg	
6,923,467	B2	8/2005	Hsia	
7,249,779	B2	7/2007	Ehrenreich et al.	
7,311,323	B1	12/2007	Lan	
7,320,471	B2	1/2008	Maciejczyk	
7,367,581	B2	5/2008	Yang	
7,377,537	B2	5/2008	Li	
7,401,803	B1	7/2008	Lai	
7,475,900	B2 *	1/2009	Cheng	B62B 7/08 280/47.38
7,481,439	B2	1/2009	Thompson	
7,497,461	B2	3/2009	Emerson	
D593,459	S *	6/2009	Liao	D12/129
7,677,585	B2	3/2010	Rohl	
7,681,894	B2	3/2010	Santamaria	
7,766,366	B2	8/2010	Li	
7,832,755	B2	11/2010	Nolan et al.	
7,896,384	B2	3/2011	Schonfeld	
7,938,435	B2	5/2011	Sousa et al.	
8,029,007	B2	10/2011	Jones et al.	
8,029,014	B2	10/2011	Ahnert et al.	
8,033,554	B2	10/2011	Vieira et al.	
8,061,732	B2	11/2011	Song et al.	
8,157,273	B2	4/2012	Bar-Lev	
8,231,136	B2	7/2012	Fiore, Jr.	
8,251,382	B2	8/2012	Chen et al.	
8,262,103	B2	9/2012	Enserink et al.	
8,322,745	B2 *	12/2012	Li	B62B 7/08 280/642
8,336,904	B2	12/2012	Kylstra	
8,444,171	B2	5/2013	Smith et al.	
8,458,880	B2	6/2013	Fiore, Jr.	
8,480,115	B2 *	7/2013	Chen	B62B 9/26 280/643
8,505,952	B1 *	8/2013	Choquette	B60D 1/1675 280/491.2
8,585,075	B2	11/2013	Zhong	
8,596,670	B2	12/2013	di Carimate et al.	
8,602,441	B2 *	12/2013	Li	B62B 9/28 280/642
8,696,016	B2	4/2014	Homan et al.	
8,733,784	B2	5/2014	Kobayashi	
8,764,048	B1	7/2014	Ahnert et al.	
8,844,964	B2 *	9/2014	Chiang	B62B 7/14 280/658
8,882,134	B2	11/2014	Rolicki et al.	
8,905,427	B2	12/2014	Katz et al.	
8,936,261	B2	1/2015	Yuan	
9,010,773	B2	4/2015	Horst et al.	
9,108,654	B2	8/2015	Kozinski	
9,108,659	B2	8/2015	Sparling	
9,119,483	B1	9/2015	Heisey	
9,199,659	B2	12/2015	Chen et al.	
9,200,746	B2	12/2015	Xiao	
9,227,650	B2	1/2016	Gillett	
9,242,665	B2	1/2016	Offord	
9,260,127	B2	2/2016	Rolicki et al.	
9,260,128	B2	2/2016	Liu	
9,517,787	B2	12/2016	Zehfuss et al.	
9,561,817	B2	2/2017	Laffan et al.	
9,701,333	B2	7/2017	Liu	
9,725,106	B2	8/2017	Pos	
9,771,095	B2	9/2017	Laffan et al.	
9,776,652	B2	10/2017	Zhong	
9,840,168	B2	12/2017	Yi et al.	
9,849,903	B1	12/2017	Lai	
9,884,640	B2	2/2018	Li	
9,924,806	B2	3/2018	Penello et al.	
9,944,305	B2	4/2018	Lee et al.	
9,956,979	B1	5/2018	Fernsten	
10,023,218	B2	7/2018	Paxton	
10,207,731	B2	2/2019	Taylor et al.	
10,293,843	B2	5/2019	Naslain	
10,449,987	B2	10/2019	Gibson	
10,556,610	B2	2/2020	Rolicki et al.	
10,730,543	B2 *	8/2020	Lee	B62B 9/12
10,899,377	B2 *	1/2021	Eggert-Crowe	B62B 7/14
10,926,785	B2 *	2/2021	Ambar	B62B 7/08
10,974,754	B2 *	4/2021	Choi	B62B 9/14
10,994,763	B2 *	5/2021	Rolicki	B62B 9/12
11,001,289	B2 *	5/2021	Gibson	B62B 7/06
11,052,933	B2 *	7/2021	Cheng	B62B 9/102
11,059,510	B2 *	7/2021	Eyman	B62B 9/12
2001/0033069	A1	10/2001	Ivers	
2002/0109321	A1	8/2002	Turner et al.	
2003/0025304	A1	2/2003	Haeggberg	
2006/0001226	A1	1/2006	Refsum	
2006/0131841	A1	6/2006	Huang	
2006/0290107	A1	12/2006	Powers	
2007/0001429	A1	1/2007	Maciejczyk	
2007/0085303	A1	4/2007	Cheng	
2007/0090619	A1	4/2007	Lundh	
2007/0114738	A1	5/2007	Jones et al.	
2008/0224451	A1	9/2008	Vegt	
2008/0231022	A1	9/2008	Hu et al.	
2009/0302578	A1	12/2009	White et al.	
2010/0140902	A1	6/2010	Zehfuss	

(56) **References Cited**

U.S. PATENT DOCUMENTS

2014/0191483	A1	7/2014	Rolicki et al.
2014/0333039	A1	11/2014	Zehfuss
2016/0046315	A1	2/2016	Zehfuss et al.

FOREIGN PATENT DOCUMENTS

CN	2918181	Y	7/2007
CN	201626448	U	11/2010
CN	201646823	U	11/2010
CN	102256856	A	11/2011
CN	103909960	A	7/2014
CN	103921830	A	7/2014
ES	2253093	A1	5/2006
GB	2309203	A	7/1997
WO	2005/105545	A1	11/2005
WO	2005/105546	A1	11/2005
WO	2010/065884	A1	6/2010
WO	2014/042524	A1	3/2014

OTHER PUBLICATIONS

European Search Report and Search Opinion for European Application No. 09831215, dated Nov. 4, 2013 (7pgs).

Extended European Search report issued in EP Application No. 17161947.1, dated Aug. 29, 2017 (9 pages).

International Search Report and Written Opinion for International Application No. PCT/US2009/066817, dated Jan. 29, 2010 (6 pages).

International Preliminary Report on Patentability for International Application No. PCT/US2009/066817, dated Jun. 7, 2011 (5 pages).

Office Action from Australian Patent Application 2009322149, dated Apr. 1, 2014 (5pgs).

Office Action from Australian Patent Application No. 2009322149, dated Dec. 2, 2014 (4pgs).

Office Action from Canadian Patent Application No. 2,745,914, dated Dec. 17, 2015 (3pgs).

Office Action from Chinese Patent Application No. 200980148829.3 dated Oct. 31, 2012 (17pgs., including 8 pgs. English translation).

Office Action from Chinese Patent Application No. 200980148829.3, dated Jun. 8, 2013 (11 pgs. including, 5 pgs English translation).

Office Action from Chinese Patent Application No. 200980148829.3, dated Nov. 18, 2013 (5pgs, including 2pg English translation).

Office Action from Chinese Patent Application No. 201410187239.4, dated Sep. 6, 2015 (9pgs, including 4 pg. English translation).

Office Action from European Patent Application No. 09831215, dated Jan. 13, 2016. (5pgs).

* cited by examiner

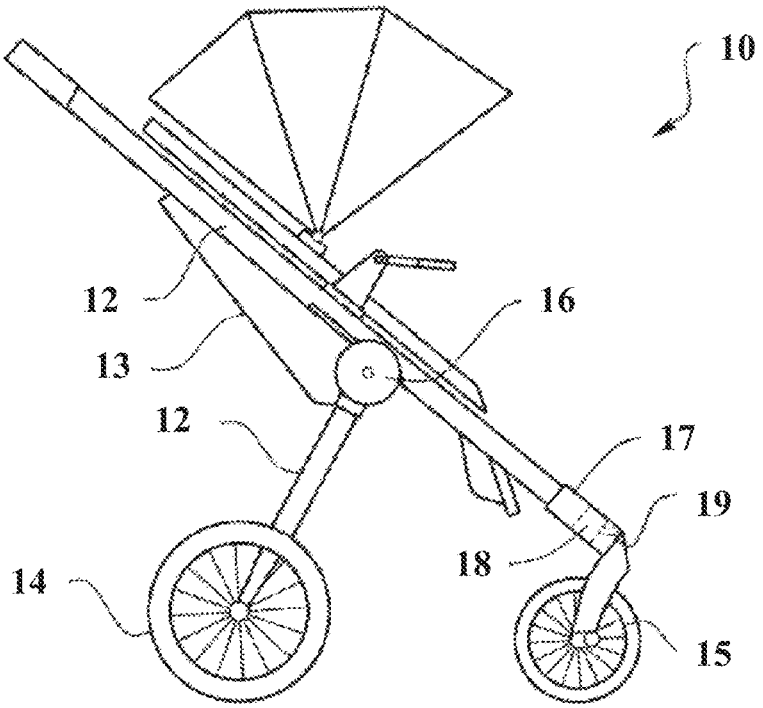

FIGURE 1

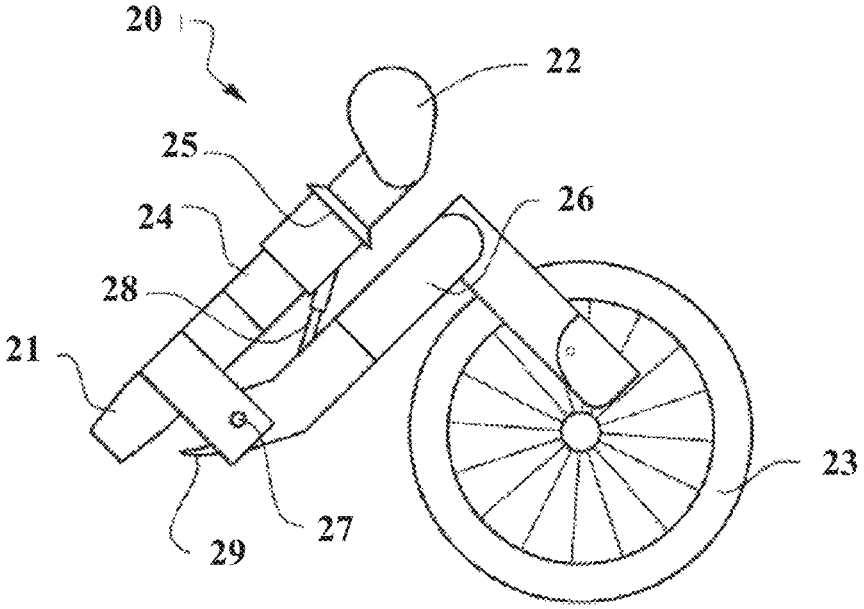

FIGURE 2

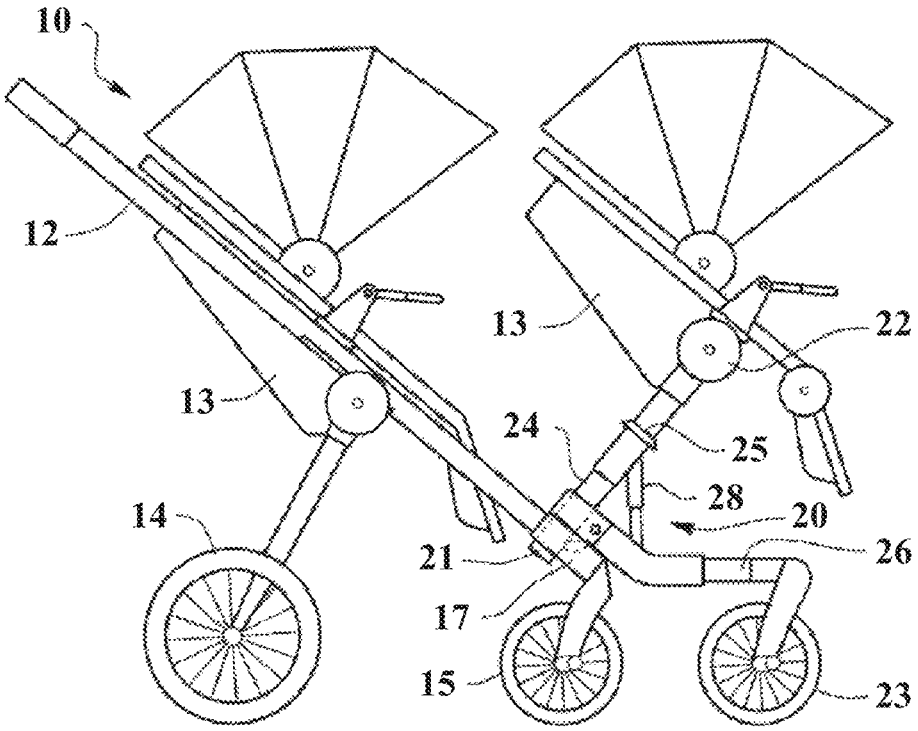

FIGURE 3

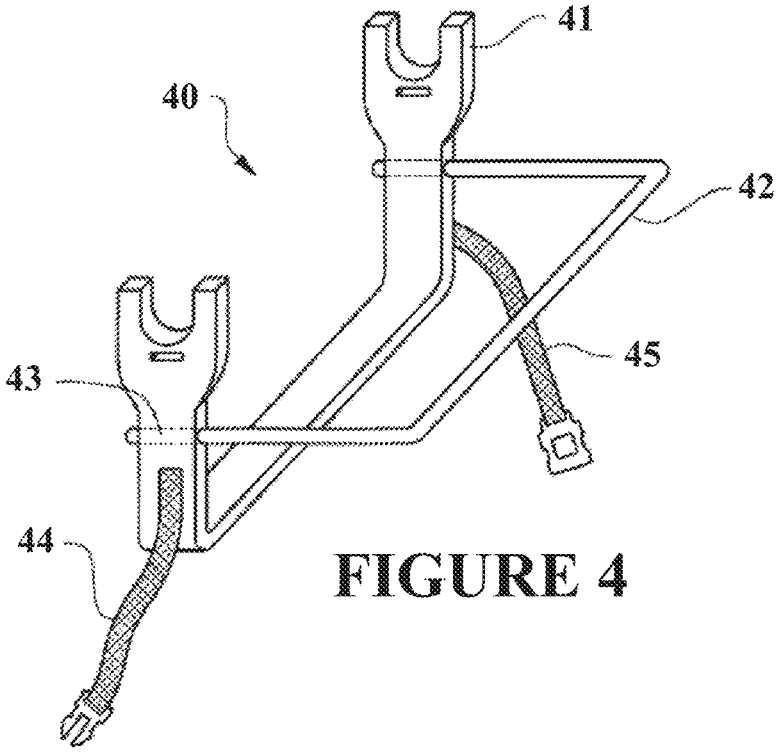

FIGURE 4

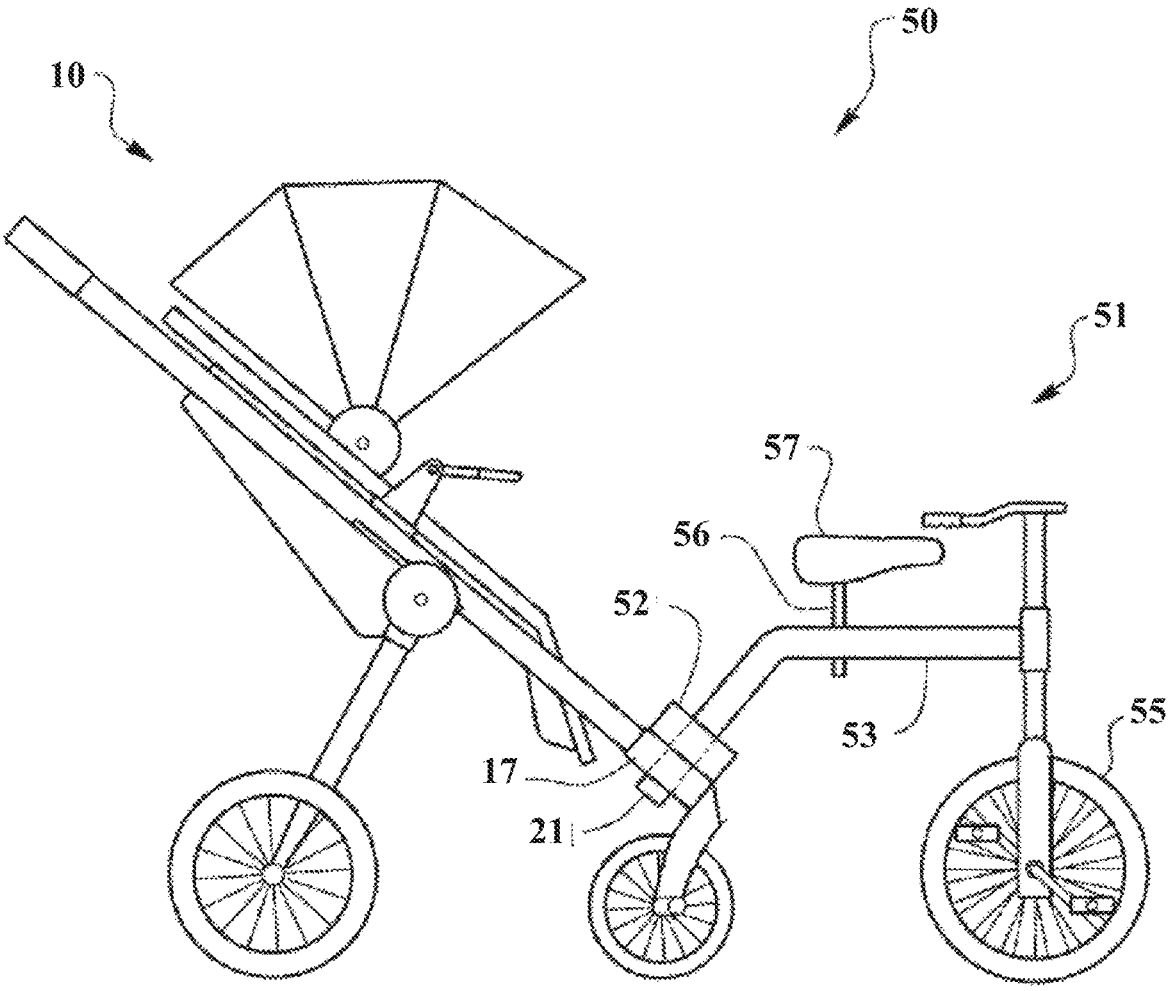

FIGURE 5

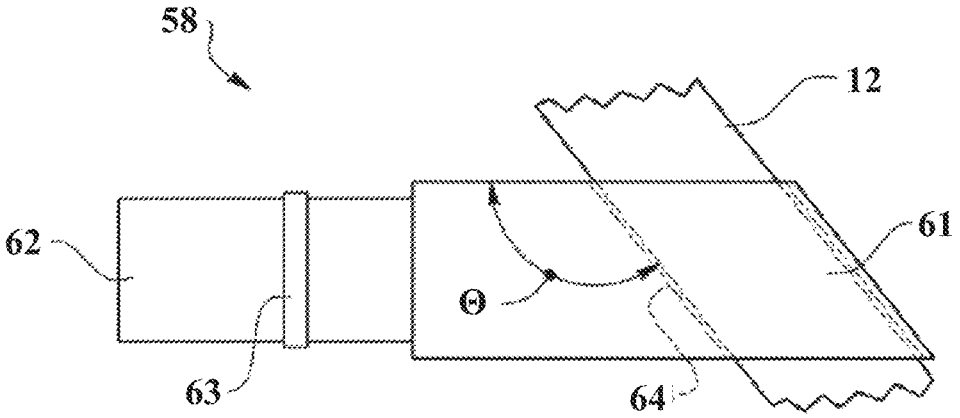

FIGURE 6A

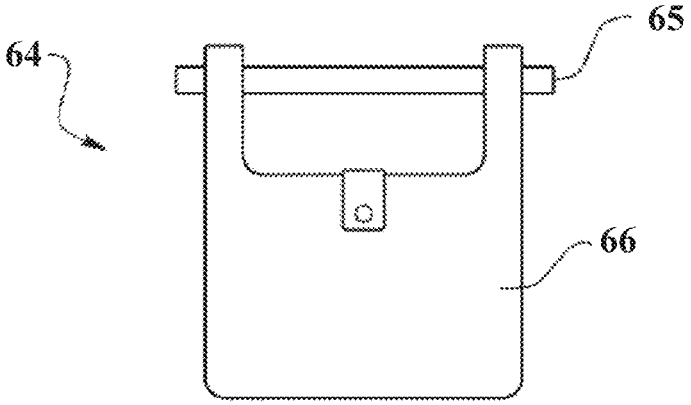

FIGURE 6B

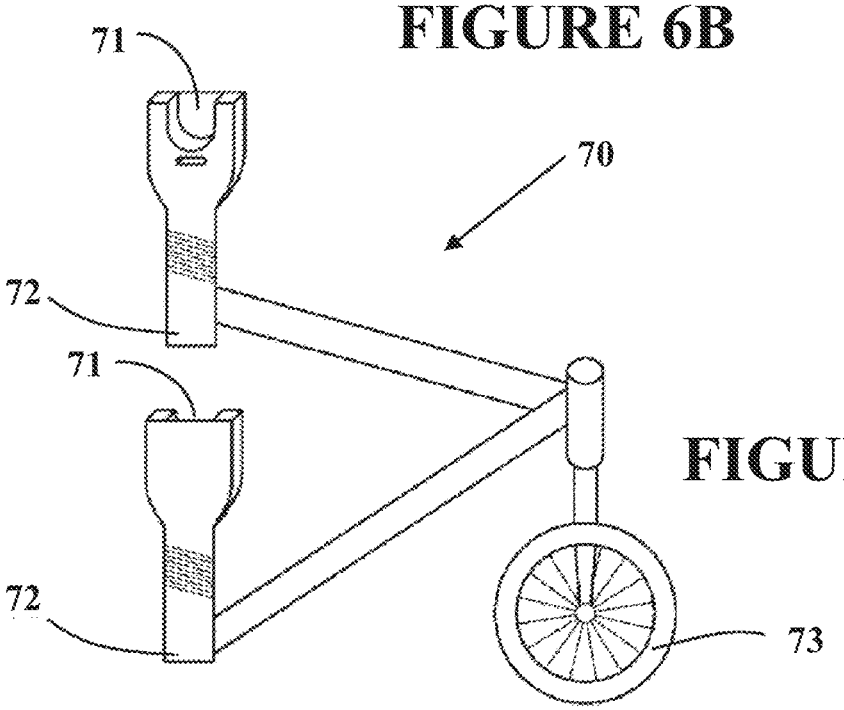

FIGURE 7

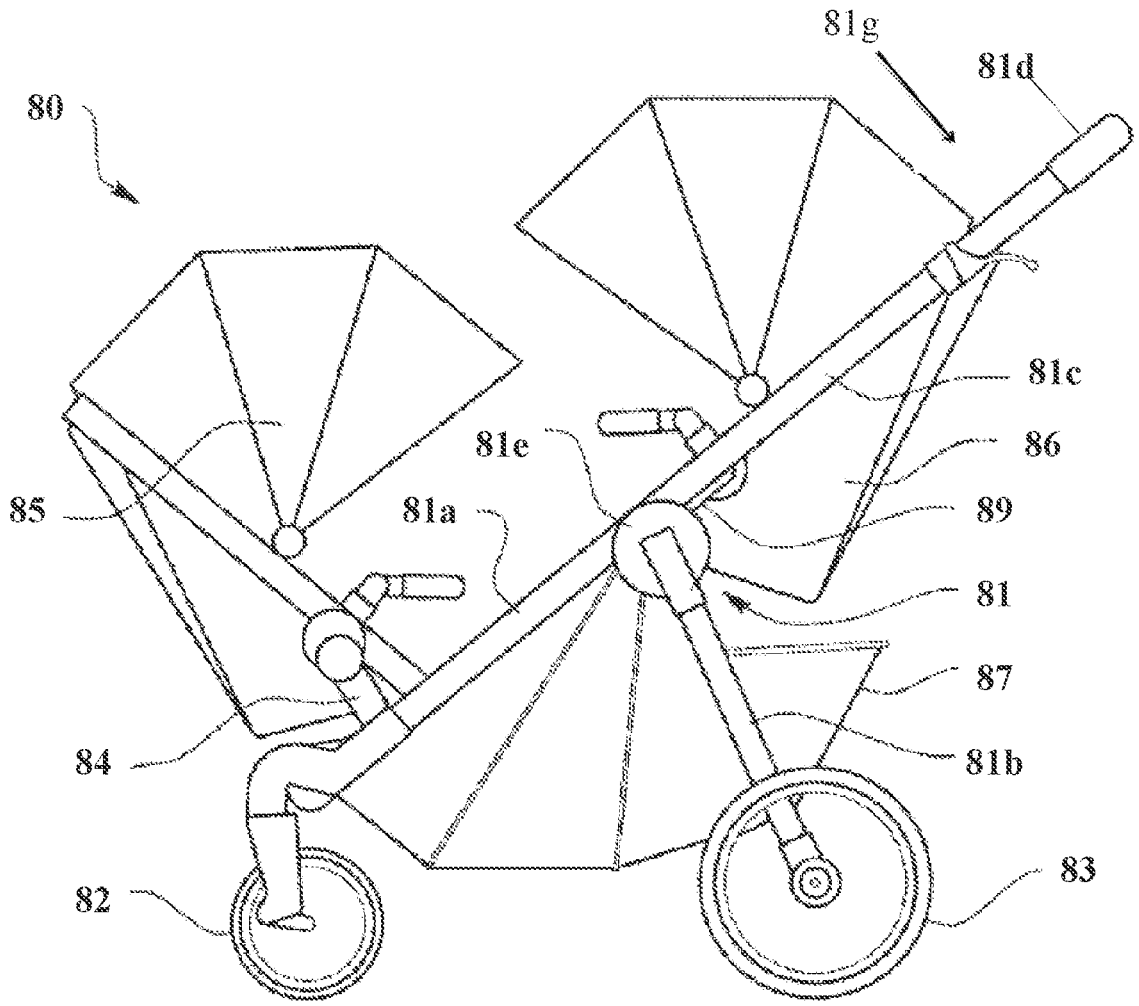

FIGURE 8A

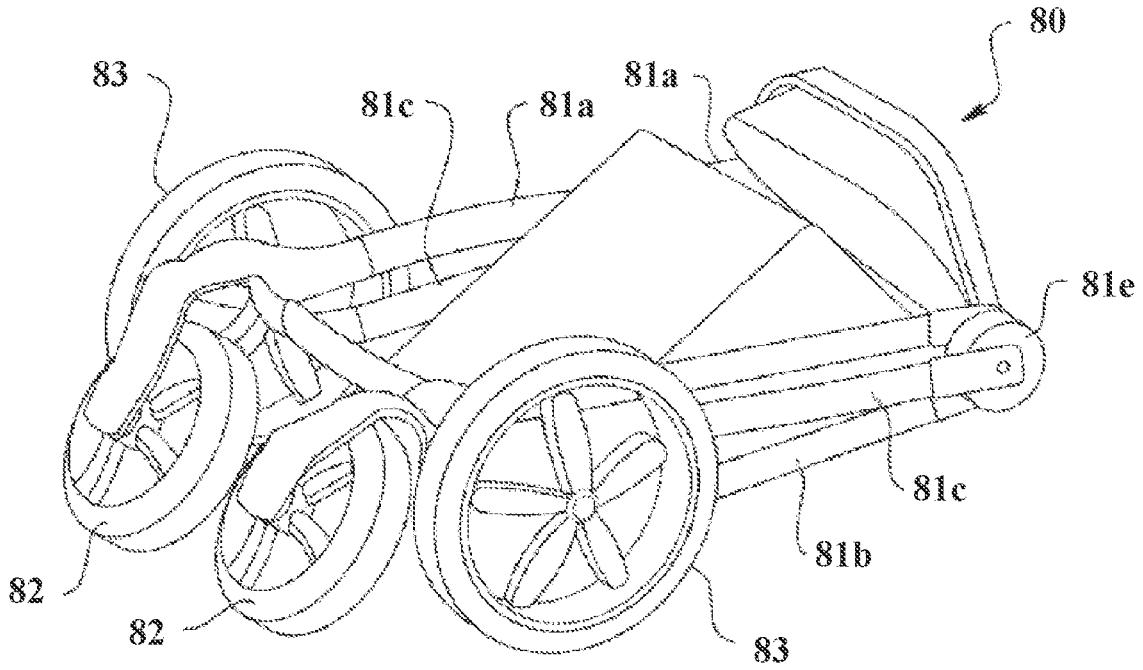

FIGURE 8B

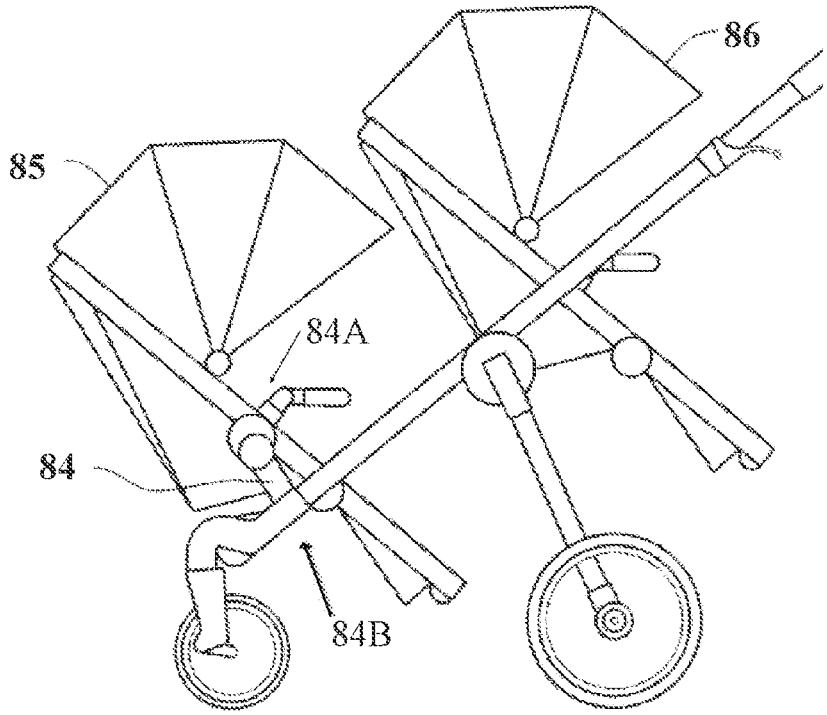

FIGURE 8C

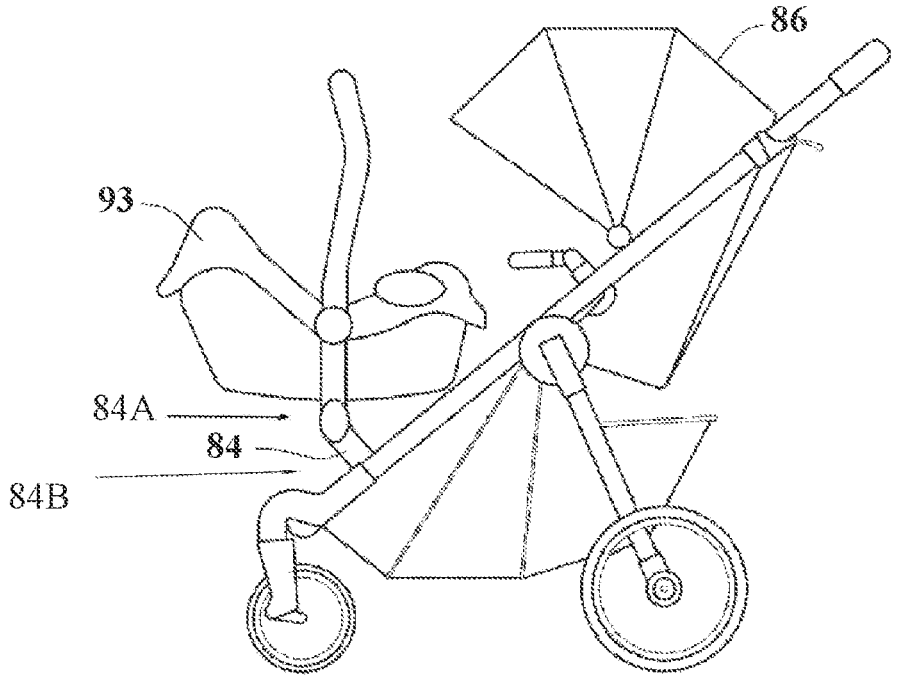

FIGURE 8D

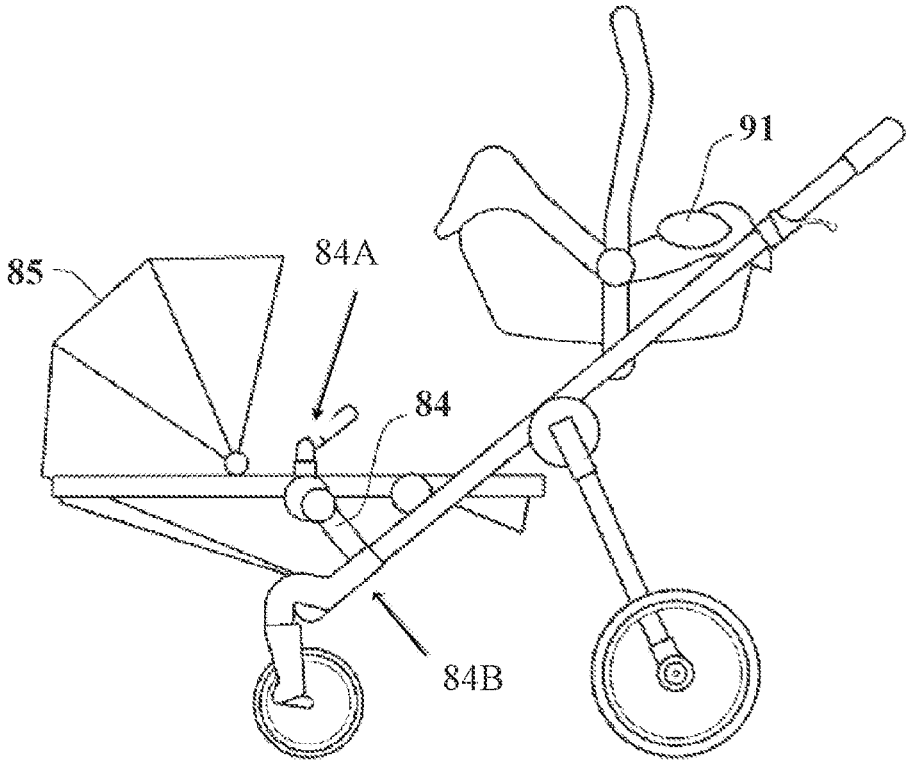

FIGURE 8E

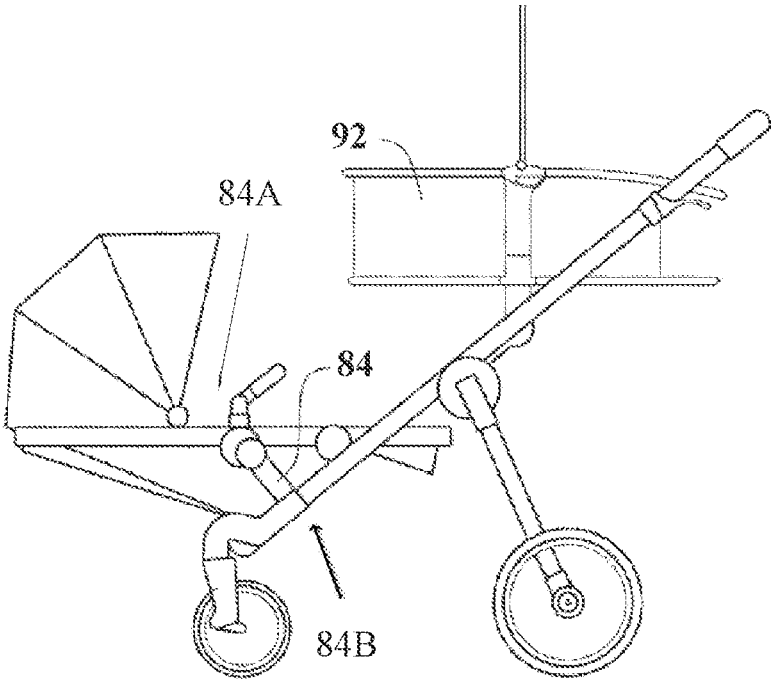

FIGURE 8F

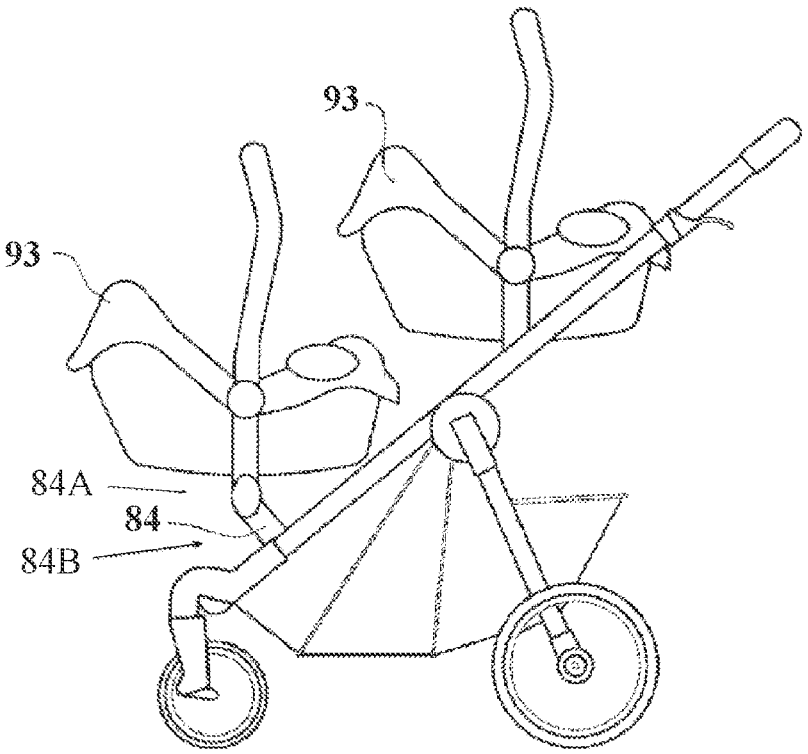

FIGURE 8G

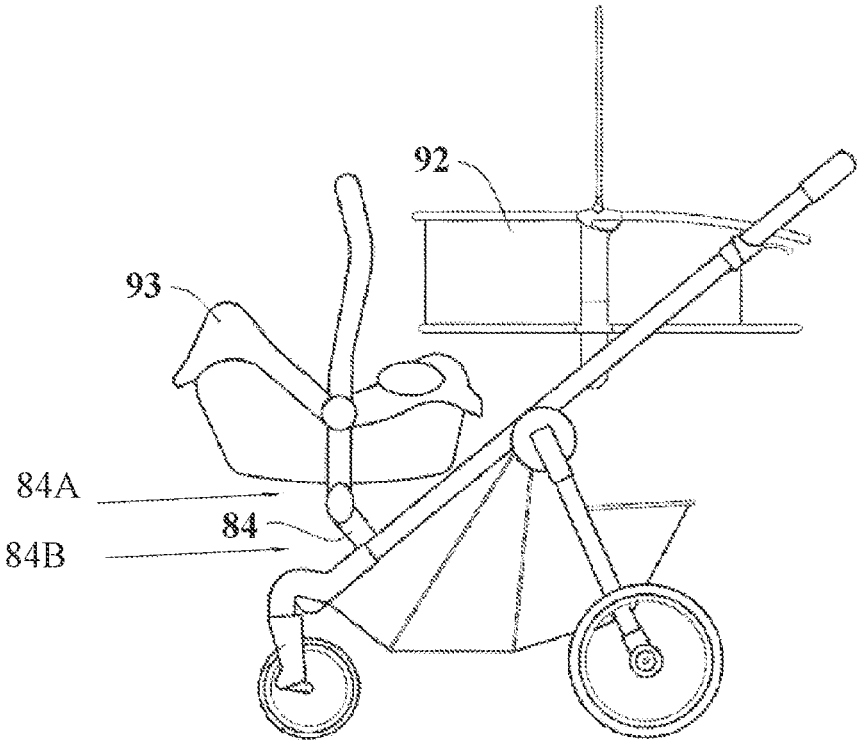

FIGURE 8H

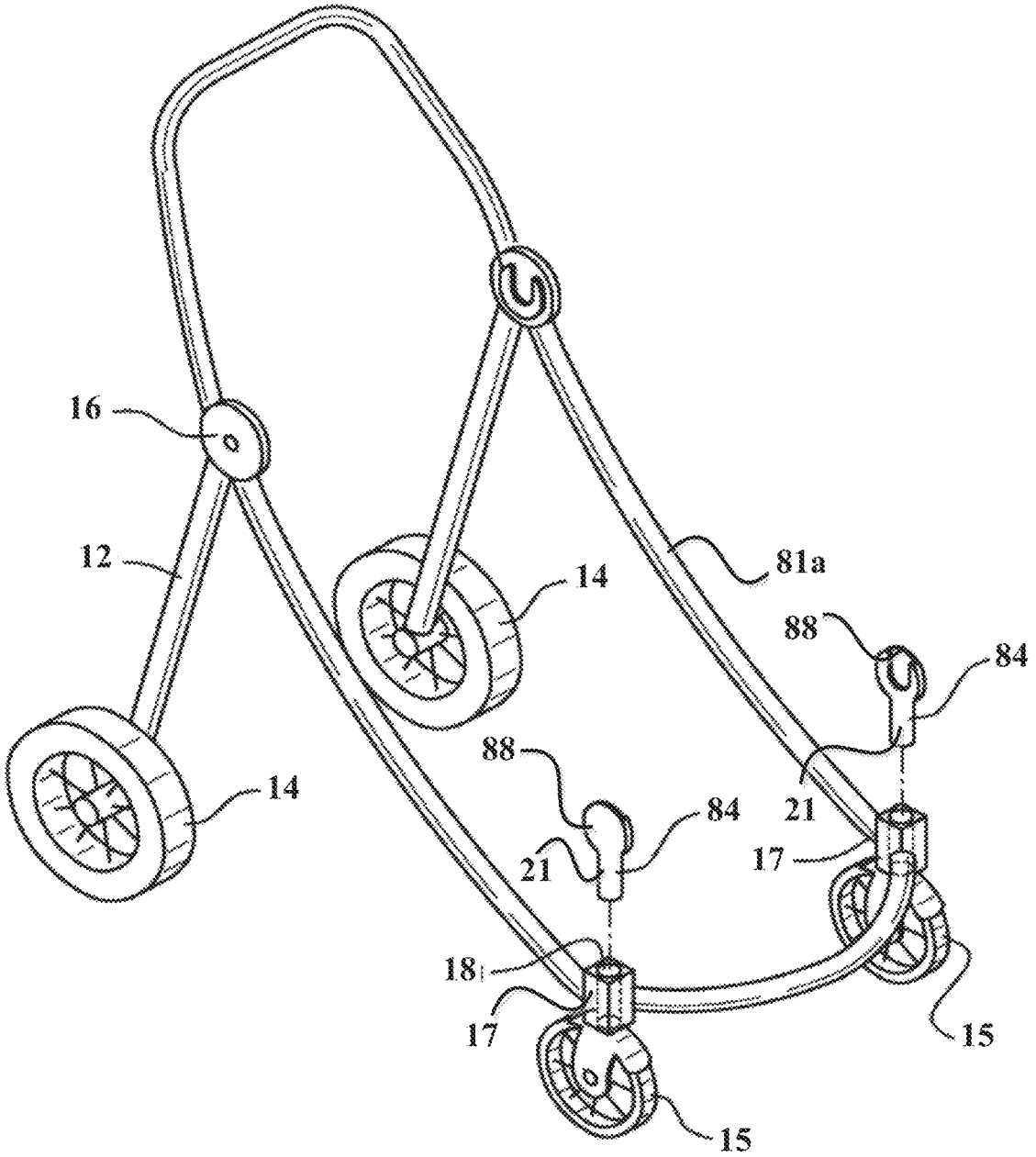

FIGURE 9

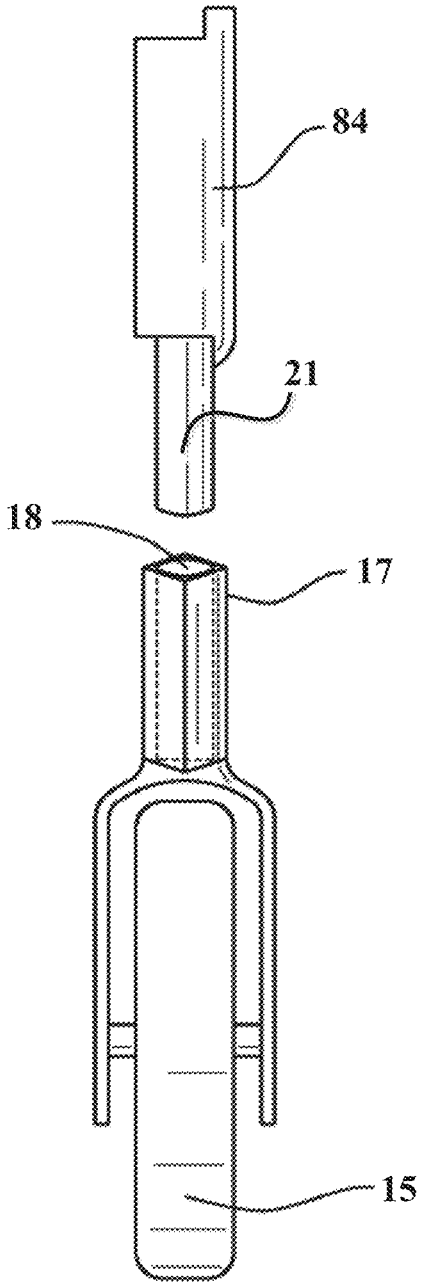

FIGURE 10

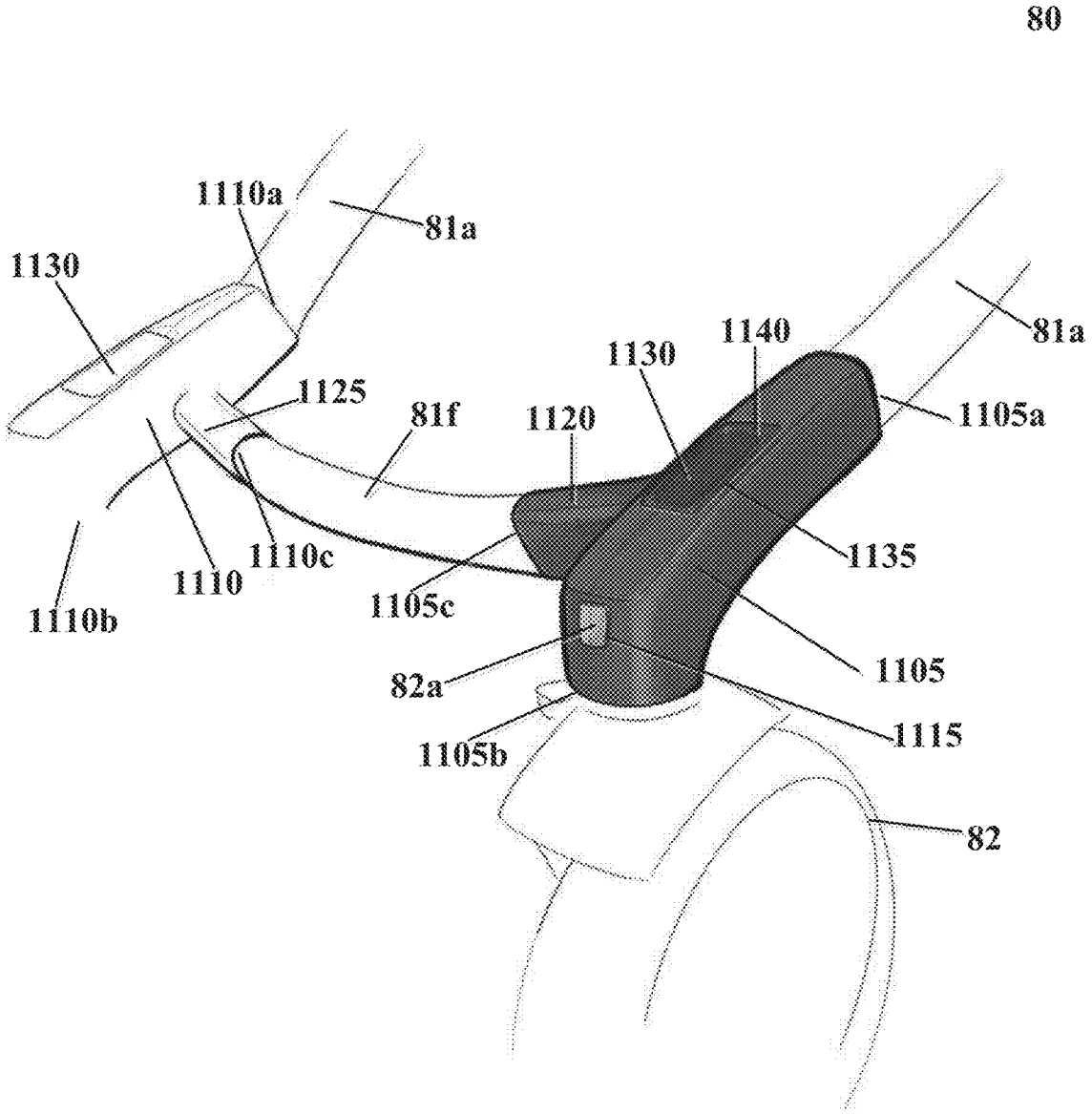
80
1110a
81a
1130
1140
81a
1130
1125
81f
1120
1105a
1135
1110c
1110
1110b
1105c
1105
82a
1115
1105b
82

FIGURE 11

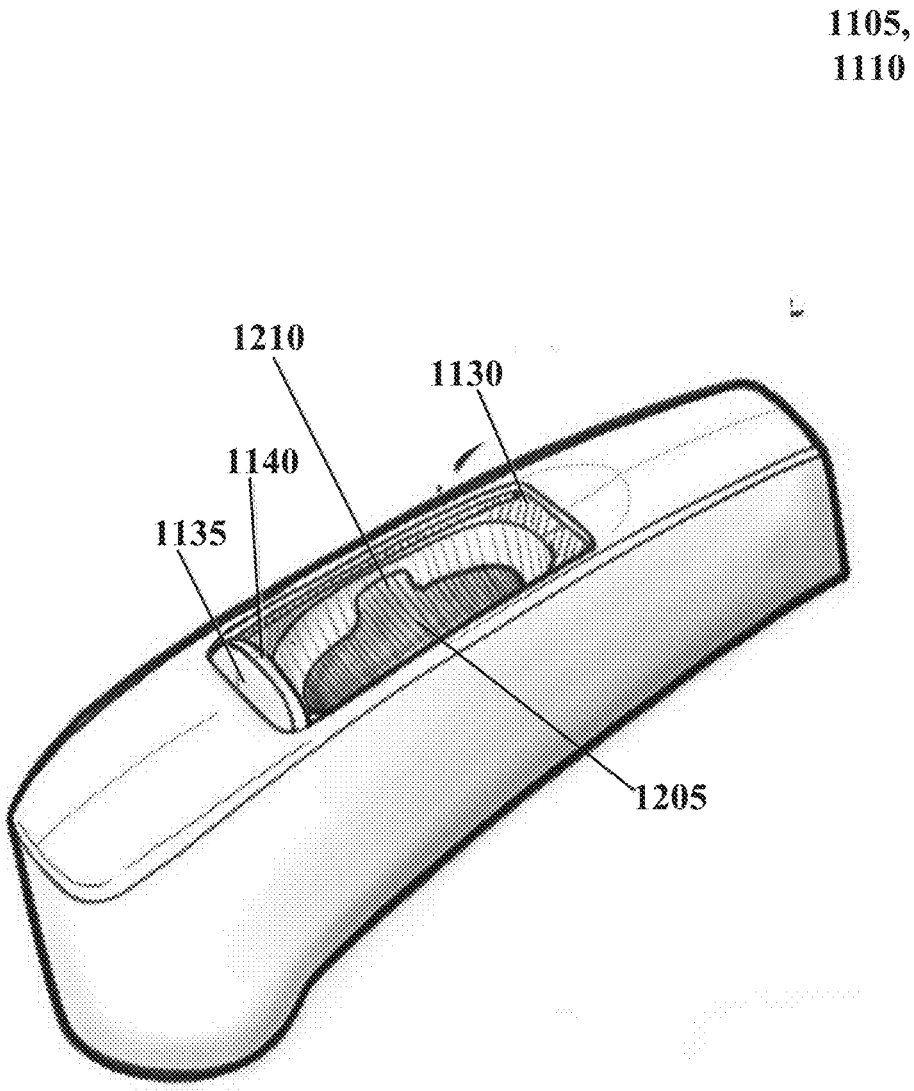

FIGURE 12

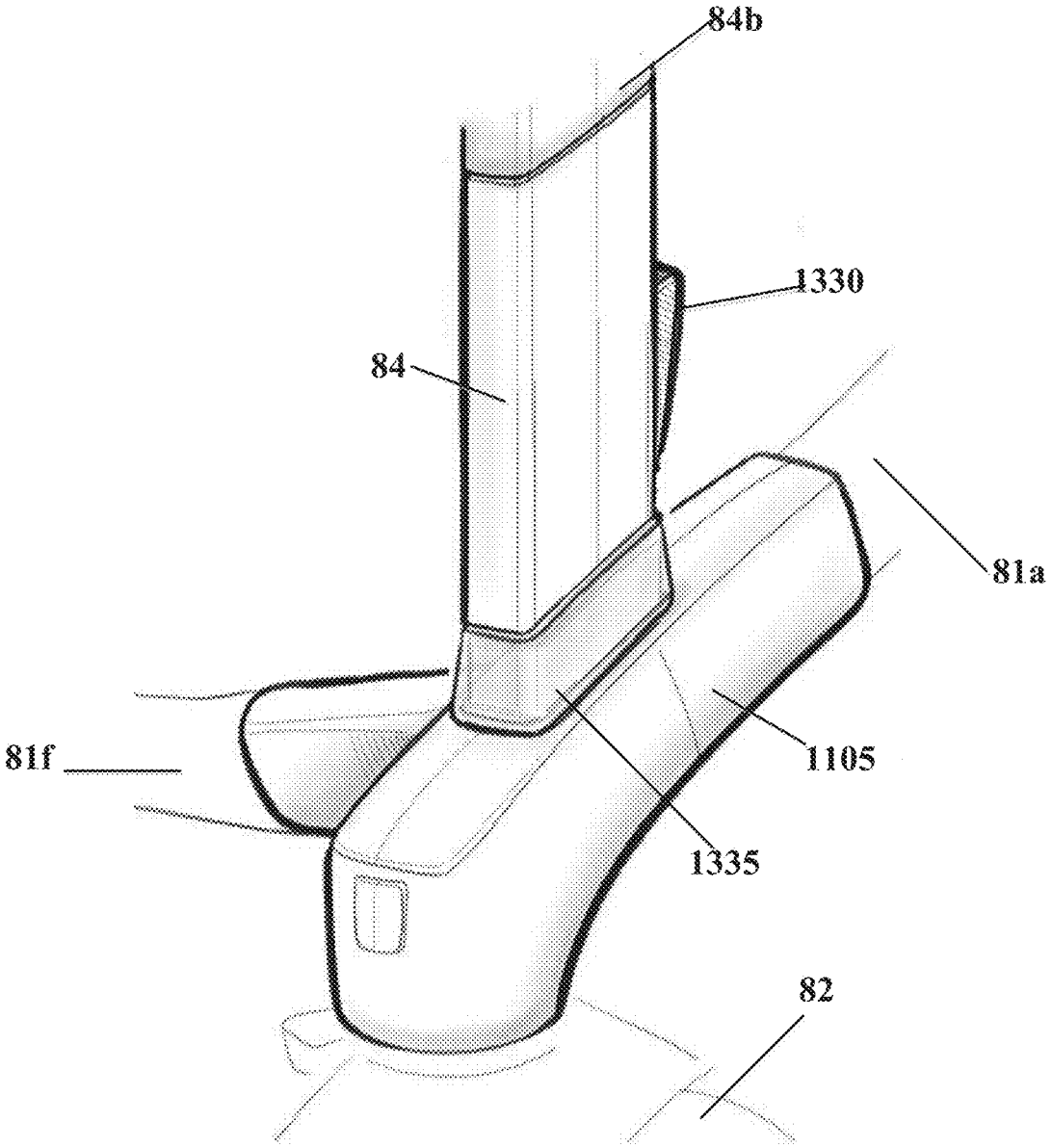

FIGURE 13A

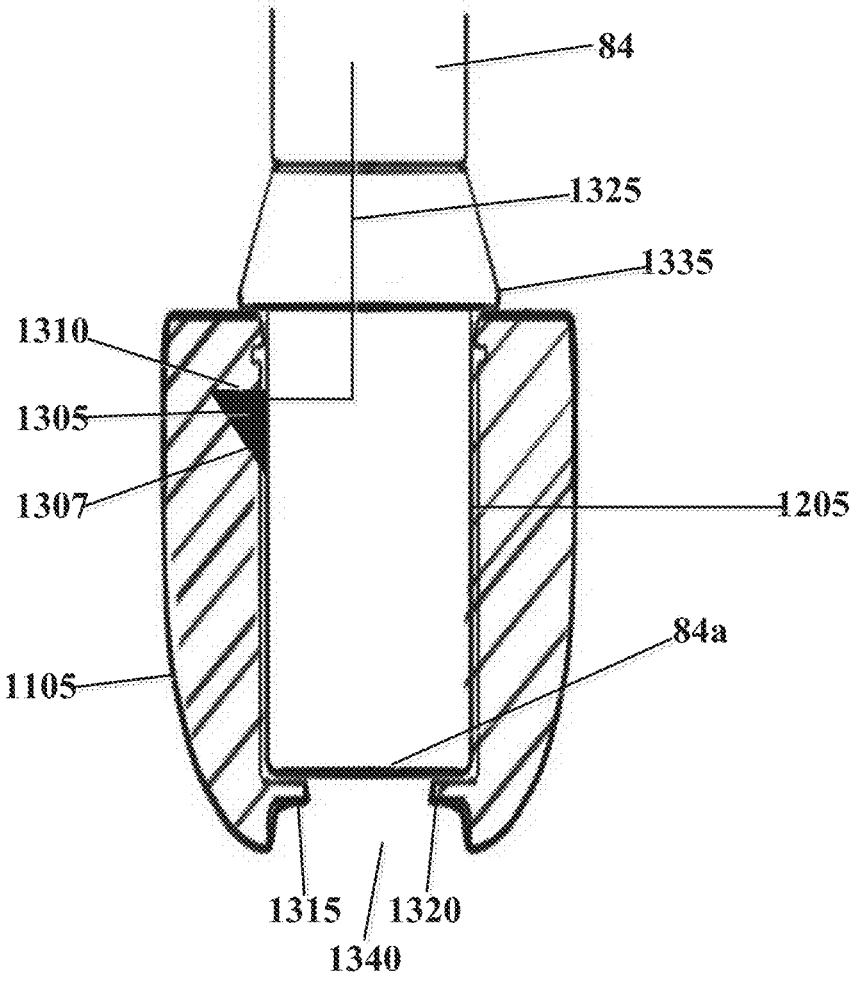

FIGURE 13B

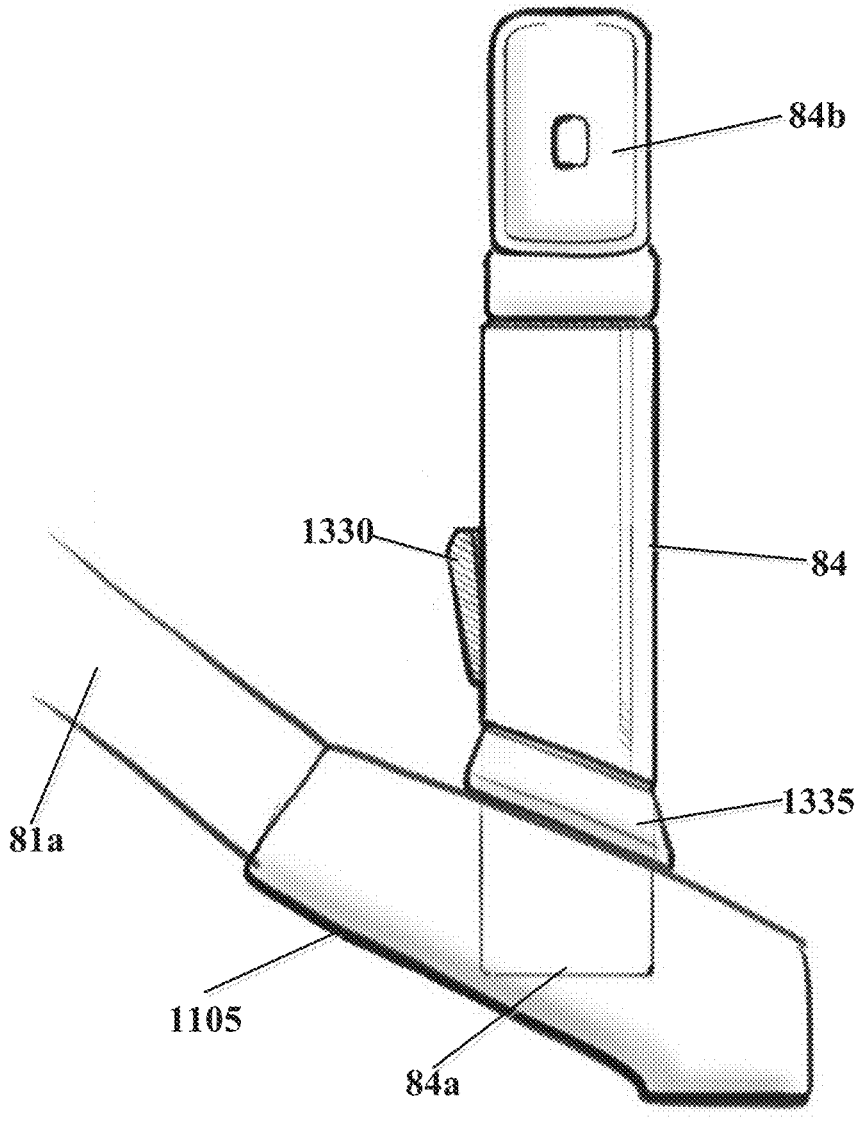

FIGURE 13C

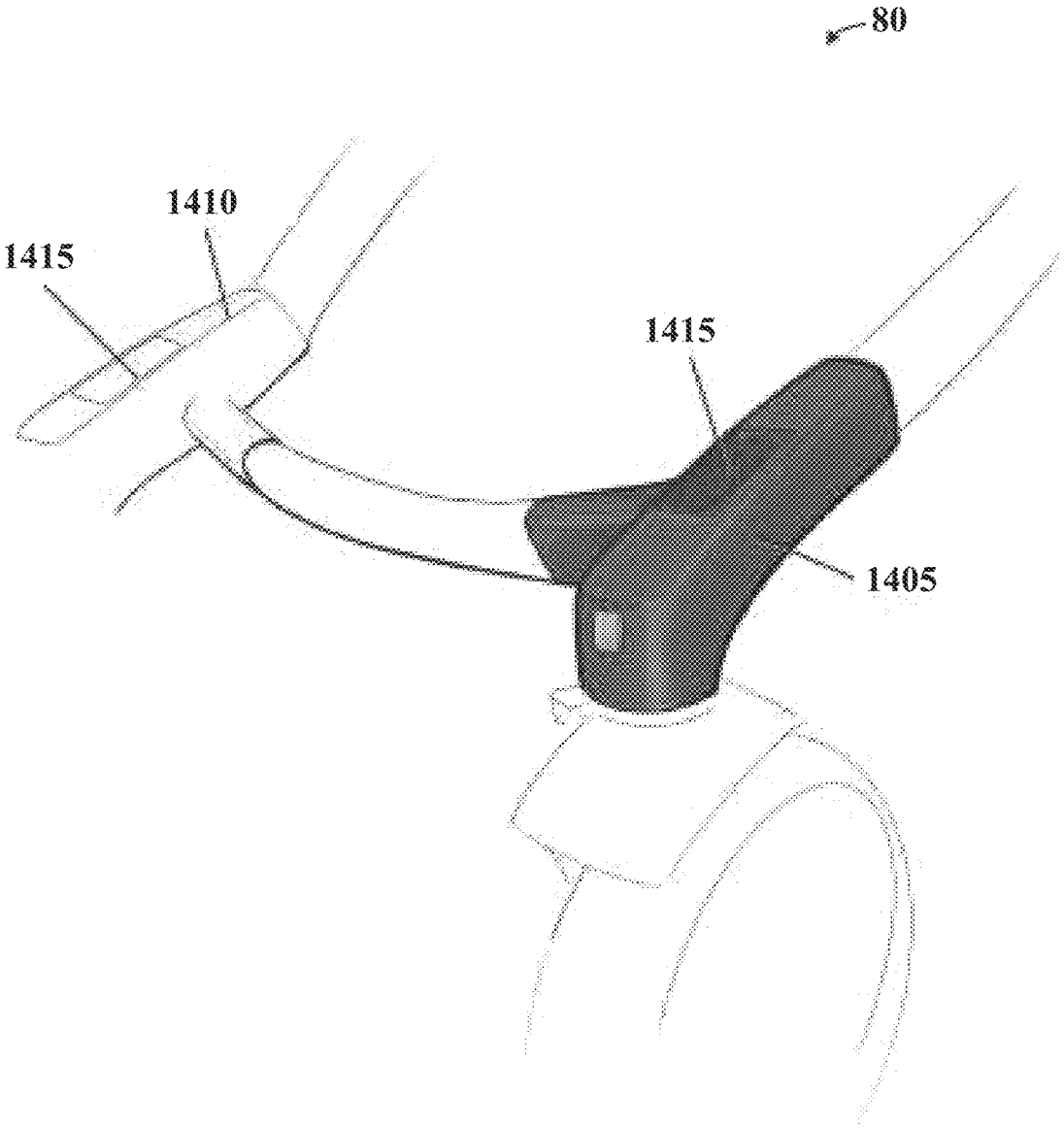

FIGURE 14A

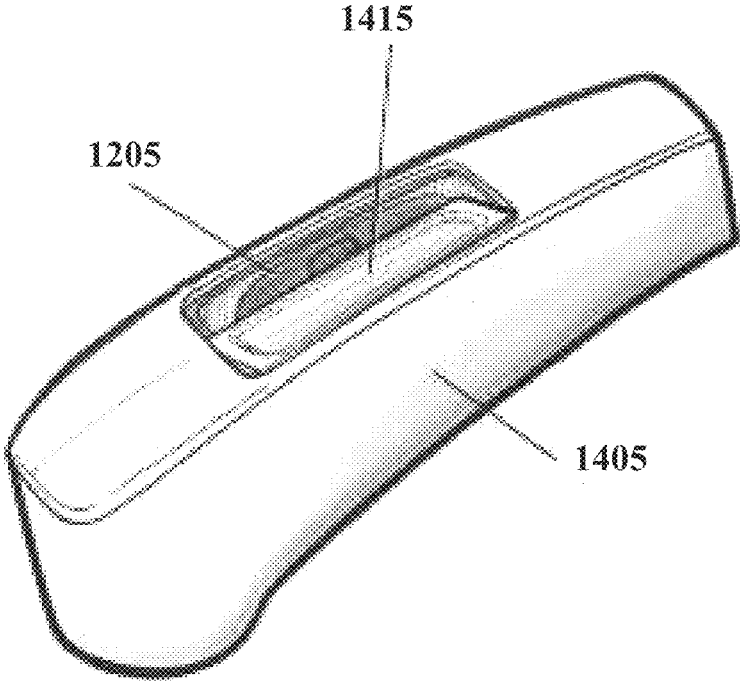

FIGURE 14B

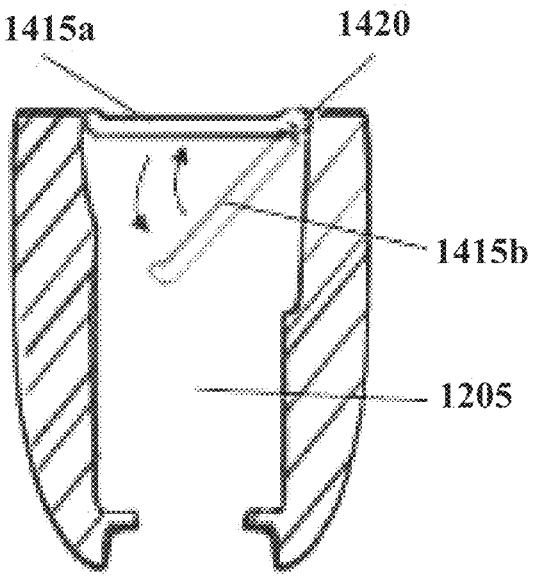

FIGURE 14C

REMOVABLE SEAT ATTACHMENT FOR A STROLLER

RELATED APPLICATIONS

This application is a continuation of and claims priority under 35 U.S.C. § 120 to U.S. patent application Ser. No. 15/912,901, filed Mar. 6, 2018, and titled "Removable Seat Attachment for a Stroller," which is a continuation of and claims priority under 35 U.S.C. § 120 to U.S. patent application Ser. No. 15/225,326 (now U.S. Pat. No. 9,944,305), filed Aug. 1, 2016, and titled "Removable Seat Attachment for a Stroller," which claims priority under 35 U.S.C. § 119 to U.S. Provisional Patent Application No. 62/311,224 filed Mar. 21, 2016, and titled "Removable Seat Attachment for a Stroller," the entire contents of each of which are hereby incorporated herein by reference for all purposes. This application is also a continuation of and claims priority under 35 U.S.C. § 120 to U.S. patent application Ser. No. 15/912,901, filed Mar. 6, 2018, and titled "Removable Seat Attachment for a Stroller," which is a continuation of and claims priority under 35 U.S.C. § 120 to U.S. patent application Ser. No. 15/225,326 (now U.S. Pat. No. 9,944,305), which is a continuation-in-part of and claims priority under 35 U.S.C. § 120 to U.S. patent application Ser. No. 14/597,420 (now U.S. Pat. No. 9,403,550), filed on Jan. 15, 2015, which claims priority to U.S. patent application Ser. No. 14/261,558 (now U.S. Pat. No. 8,955,869) filed on Apr. 25, 2014, which claims priority to U.S. patent application Ser. No. 12/631,375 filed on Dec. 4, 2009, which claims priority to U.S. Provisional Patent Application No. 61/119,920 filed on Dec. 4, 2008, the entire contents of each of which are incorporated herein by reference for all purposes.

TECHNICAL FIELD

Embodiments disclosed herein are generally related to children's stroller systems and more particularly to apparatuses and methods for a removable seat attachment for a stroller that is capable of supporting a seat including, but not limited to, a stroller seat, a baby seat, a bassinet, a pram, a car seat, or a baby carrier.

BACKGROUND

Parents or guardians with multiple young children may have difficulty transporting their children from place to place. Children are slow, easily distracted and, therefore, may lag behind. In response, many parents and/or guardians have purchased double seat strollers allowing the parent or guardian to push two children simultaneously and thus allow them to more efficiently run errands, take walks, or jog. As such, a double seat stroller allows the parent or guardian with multiple young children more freedom than they would have with only a single seat stroller.

However, permanently fixed double seat strollers also have certain disadvantages. Double seat strollers are substantially larger (wider and/or longer) than single seat strollers and are, therefore, more difficult to maneuver through doorways and down aisles in stores. While, the benefits of being able to accommodate two children at one time in a double seat stroller typically offset these disadvantages, when the parent or guardian has only one child with them, the benefits of the double seat stroller are not realized but the disadvantages still exist.

Stroller manufacturers have attempted to solve this problem by providing an adjustable stroller that can be modified

from having a single seat to having two seats by providing attachments that provide a second seat for the second child that hangs under and slightly behind the seat of the single seat stroller. In other embodiments, the second seat can be attached to a seat attachment placed further forward in the stroller. The current attachment mechanisms can suffer from several drawbacks. These drawbacks include being permanently affixed to the stroller frame and taking up unnecessary space or creating a safety hazard for children not in the stroller when the second seat is not attached to the stroller. In addition, the covers for the seat attachments, for covering a portion of the seat attachment mechanism when not in use, are detachable and can be easily lost when the seat attachment is in use.

BRIEF DESCRIPTION OF THE EXAMPLE DRAWINGS

For a more complete understanding of the present disclosure and certain features thereof, reference is now made to the following description, in conjunction with the accompanying figures briefly described as follows:

FIG. **1** presents a side elevation view of a single stroller apparatus according to one example embodiment of the disclosure.

FIG. **2** presents a partial side elevation view of a seat attachment to convert a single stroller into a double stroller according to one example embodiment of the disclosure.

FIG. **3** presents a side elevation view of a combination of the single stroller of FIG. **1** attached to the seat attachment of FIG. **2** according to one example embodiment of the disclosure.

FIG. **4** presents a perspective view of a seat attachment capable of supporting a car seat on an attachment of FIG. **2** according to one example embodiment of the disclosure.

FIG. **5** presents a side elevation view of a combination of the single stroller of FIG. **1** attached to an attachment in the form of a tricycle-like riding device according to one example embodiment of the disclosure.

FIG. **6**A presents a view of an accessory attachment for supporting an accessory on a stroller, while FIG. **6**B presents a view of a bag or purse for attaching to the accessory attachment of FIG. **6**A according to one example embodiment of the disclosure.

FIG. **7** presents a perspective view of an attachment for supporting a seat comprising one wheel according to one example embodiment of the disclosure.

FIGS. **8**A-H present multiple views of a stroller apparatus capable of being converted from a single seat stroller to a double seat stroller through the use of removable seat attachment adapters according to one example embodiment of the disclosure.

FIG. **9** presents a perspective view of one version of a stroller with left and right attachment frame members for attaching a second seat according to one example embodiment of the disclosure.

FIG. **10** presents a front elevation view of an attachment frame member according to one example embodiment of the disclosure.

FIG. **11** is a partial perspective view of the stroller showing the seat attachment housing according to one example embodiment of the disclosure.

FIG. **12** is a partial perspective view of the seat attachment housing according to one example embodiment of the disclosure.

FIGS. **13**A-C are partial perspective views of the removable seat attachment adapter removably coupled to the seat attachment housing according to one example embodiment of the disclosure.

FIGS. **14**A-C are partial perspective views of an alternative embodiment of the seat attachment housing according to another example embodiment of the disclosure.

DETAILED DESCRIPTION OF THE EXAMPLE EMBODIMENTS

Example embodiments of the invention now will be described more fully hereinafter with reference to the accompanying drawings, in which example embodiments are shown. The concept disclosed herein may, however, be embodied in many different forms and should not be construed as limited to the exemplary embodiments set forth herein; rather, these embodiments are provided so that this disclosure will be thorough and complete, and will fully convey the scope of the invention to those skilled in the art. Like numbers refer to like, but not necessarily the same, elements throughout.

The example embodiments described herein and shown in the figures is described with reference to an infant or child's stroller that can be configured to adjust from a single seat stroller to a multi-seat stroller. While the example embodiments will generally be described with reference to adding or removing seats from the stroller, the reference to seats is for example purposes only, as the seat or portion that can be added or removed from the stroller can include, but is not limited to, a stroller seat, a baby seat, a bassinet, a pram, a car seat, or a baby carrier. Each of the stroller seat, baby seat, bassinet, pram, car seat, and/or baby carrier should individually be read as an alternative embodiment to the removable/added infant or child's stroller seat described below.

Certain dimensions and features of the example adjustable stroller are described herein using the term "approximately." As used herein, the term "approximately" indicates that each of the described dimensions is not a strict boundary or parameter and does not exclude functionally similar variations therefrom. Unless context or the description indicates otherwise, the use of the term "approximately" in connection with a numerical parameter indicates that the numerical parameter includes variations that, using mathematical and industrial principles accepted in the art (e.g., rounding, measurement or other systematic errors, manufacturing tolerances, etc.), would not vary the least significant digit.

In addition, certain relationships between dimensions of the adjustable stroller and between features of the adjustable stroller are described herein using the term "substantially." As used herein, the terms "substantially" and "substantially equal" indicates that the equal relationship is not a strict relationship and does not exclude functionally similar variations therefrom. Unless context or the description indicates otherwise, the use of the term "substantially" or "substantially equal" in connection with two or more described dimensions indicates that the equal relationship between the dimensions includes variations that, using mathematical and industrial principles accepted in the art (e.g., rounding, measurement or other systematic errors, manufacturing tolerances, etc.), would not vary the least significant digit of the dimensions. As used herein, the term "substantially constant" indicates that the constant relationship is not a strict relationship and does not exclude functionally similar variations therefrom. As used herein, the term "substantially parallel" indicates that the parallel relationship is not a strict relationship and does not exclude functionally similar variations therefrom.

As discussed above, parents or guardians may find themselves in a situation wherein it is more convenient to transport two children in a stroller, but at the same time find it inconvenient to have both a single stroller and double stroller. Embodiments of the seat attachment solve this problem. In one aspect, an embodiment of the seat attachment for a stroller is capable of converting a single stroller into a double stroller. The seat attachment may support a seat such as, but not limited to, a stroller seat, a baby seat, a bassinet, a pram, a baby carrier, or a car seat, for example. Therefore, the parent or guardian does not require both a single stroller and a double stroller. A stroller configured to receive a seat attachment for converting a single stroller into a double stroller provides convenience to the user. The single stroller may be connected to a double stroller by attaching the seat attachment to the single stroller and then attaching the second seat. As such, an embodiment of the seat attachment for converting a single stroller into a double stroller can include at least one connector portion capable of connecting to a stroller frame and a seat support element capable of supporting a seat.

FIG. **1** presents a side elevation view of a single stroller apparatus **10** according to one example embodiment of the disclosure. Referring to FIG. **1**, it shows only one side of the single stroller **10**, however, most components include a complementary component on the other side of the single stroller but are not shown in FIG. **1**. The example single stroller **10** includes a frame **12** that supports a seat **13**. The frame **12** may optionally include at least one, and in certain embodiments preferably two, folding mechanisms **16** that allow the stroller **10** to be folded to a more convenient size for storing or transporting the stroller **10**.

In the example embodiment of FIG. **1**, the seat **13** is shown as a typical stroller seat. However, other types of seats may be used in a single stroller. The seat **13** may be permanently affixed to the frame **12** or releasably connected, such that it is capable of being removed and substituted with a different seat. As used herein, "releasably connected" or "releasably attached" means the connection is not a permanent connection and that the connection is capable of being connected and disconnected by the user of the stroller **10** without requiring special tools or special skills. Releasable connections include, but are not limited to, buttons, snaps, friction fittings, interference fits, threaded connections, locking tabs, keyed connections, other fasteners, or the like. The frame **12** is supported on a pair of back wheels **14** and a pair of front wheels **15**. In this example embodiment, the back wheels **14** are fixed and do not swivel or pivot on the frame **12** while the pair of front wheels **15** pivot to make turning the single stroller **10** easier and more convenient. Though, pivoting wheels may be preferred in certain strollers, strollers with fixed non-pivoting wheels are also common and considered as an option as part of this disclosure. In certain example embodiments, the single stroller **10** does not require pairs of front **15** or rear **14** wheels and either the front pair of wheels **15** or the back pair of wheels **14** may be substituted with a single wheel. In certain example embodiments, the single stroller **10**, including umbrella strollers, jogging strollers, all-terrain strollers, as well as other strollers may only include one front wheel **15**.

The example single stroller **10** may also include one or more seat attachments that are capable of converting any style of single stroller to a double stroller, including strollers with one or two front wheels. In one example embodiment,

the stroller **10** can include two attachment portions **17**. In one example, the attachment portions **17** can be positioned on or near the front of the stroller **10** to allow the seat attachment and the seat to be connected to the front portion of the stroller **10**. The attachment portions **17** can allow a seat attachment such as the seat attachment for converting the single stroller **10** to a double stroller, as shown in FIG. **3**, to be connected to the stroller. While only one seat attachment is shown in FIG. **3**, the stroller **10** could typically include two seat attachments as shown in FIG. **3** or one seat attachment that can include two seat support elements. In certain example embodiments, the stroller **10** can include a left side and a right side attachment portion **17**. The seat attachment for the stroller **10** can further include corresponding connector portions capable of connecting to the stroller frame at the attachment portions **17**. Though the seat attachment for the stroller is described in relation to a single stroller, the attachment may similarly be attached to a double stroller. As such, example embodiments of the seat attachment may therefore be used to convert a double stroller into a triple stroller, if desired.

FIG. **2** presents a partial side elevation view of a seat attachment to convert a single stroller into a double stroller according to one example embodiment of the disclosure. Now referring to FIGS. **1** and **2**, the example seat attachment **20** is shown in an unlocked and folded configuration. The seat attachment **20** includes a one or more connector portions **21** capable of connecting to the attachment frame members **24**, two seat attachment elements **22** capable of supporting a seat; and a wheel **23**. In this example embodiment, the connector portions **21** are connected to the rear of the seat attachment **20** allowing the seat attachment **20** to be connected to the front of a stroller, such as stroller **10** shown in FIG. **1**. In other example embodiments, the seat attachment **20** may include more than one wheel **23**, one connector portion **21**, one seat support element, or combinations of these elements. In example embodiments of the stroller with one wheel, the attachment frame member may be on the forks of the front wheel, for example.

The seat attachment **20** can include a wheel support frame **26** connecting the wheel **23** to the attachment frame member **24** of the attachment **20**. Each attachment frame member **24** has a first and a second end. The first end is capable of connecting to a stroller frame and the second end can be connected to the seat support element **22**. As shown in FIG. **2**, the seat attachment **20** can include a wheel support frame **26** that is pivotally connected to two attachment frame members **24**. The wheel support frame **26** or the attachment frame **24** may span the width of the stroller between the two attachment portions **17**. The pivotal connection **27** allows the seat attachment **20** to be folded and conveniently stored or transported but is not necessary for all example embodiments of the disclosure. The pivotal connection **27** can be optional and provide more convenience, however, other example embodiments of the seat attachment **20** can include a releasably connected wheel support frame or a rigid frame that may be incorporated to produce a seat attachment that has greater strength for use in situations where a stronger seat attachment may be desired, such as with all-terrain or jogging strollers, for example. The wheel support frame **26** may be connected at any point on the attachment frame **24**. In certain example embodiments the wheel support frame **26** is connected to the attachment frame **24** near the connector portion **21** or near the middle of the attachment frame **24**.

In certain example embodiments, the seat attachment without a wheel may include connector portion **21** or attachment frame member **24**, and seat attachment member **22**, for example. In this example embodiment, there may be no need for the pivotal connection **27**, wheel support frame **26**, sliding connector **25**, or wheel **23**.

The seat attachment **20** can also include a folding mechanism that includes a sliding connector **25** connected to a first end of a strut **28**. A second end of the strut **28** can be pivotally connected to wheel support frame **26**. In such an embodiment, the sliding connector **25** may be moved between a first position and a second position on the attachment frame member **24**. As the sliding connector **25** is moved, the strut **28** pushes the wheel support frame **26** from an in-use position to a storage position. The storage position is more compact as shown in FIG. **2**. In addition, certain example embodiments of the seat attachment **20** can also include a locking mechanism **29** that is capable of securing the seat attachment **20** to a stroller, such as stroller **10** shown in FIG. **1**. The locking mechanism **29** can be engaged by moving the sliding connector **25** to the in-use position, in which the wheel support frame **26** and wheel **23** are extended. In certain example embodiments, the wheel **23** of the seat attachment **20** is pivotally connected to the connector portion **21** and when the wheel **23** is in the in-use position the releasable connection is locked and when the wheel **23** is moved to the storage position, the releasable connection is unlocked allowing the seat attachment **20** to be removed from stroller **10**. The seat attachment **20** may be stored and the stroller **10** may be conveniently used as a single stroller. As designed, the seat attachment **20** may be reconnected to the stroller **10** for use as a double stroller when needed. The seat attachment portion may be secured into position on the stroller frame and a locking mechanism may be used with an embodiment with or without the wheel. Either the seat attachment or the stroller frame can include a locking mechanism for securing the stroller and seat attachment together. The locking mechanism may be any mechanism capable of securing the components together during use and may be a friction locking device, threaded connection, peg in a hole, or an interference locking device such as a pin in a hole, for example. As shown in the example embodiment of FIG. **2**, the locking mechanism **29** pivots with wheel support frame **26** as the seat attachment **20** is moved from an unfolded position to a folded position. The locking mechanism **29** may slide into a hole or notch in the attachment frame member **24** of the stroller **10** shown in FIG. **1**. As such, the seat attachment **20** may be attached to the stroller **10** by positioning the attachment (connector) portion **21** of the seat attachment **20** in the slot **18** of the attachment portion **17** of the stroller **10**. The sliding connector **25** may be moved to the in-use position, the wheel support frame is moved, and the locking mechanism **29** is positioned into the locking slot **19** of the stroller **10**.

In certain example embodiments, the connector portion **21** of the seat attachment **20** has a cylindrical or substantially cylindrical shape. The connector portion **21** may be inserted into a cylindrical or substantially cylindrical slot **18** of the attachment portion **17** of the stroller **10** of FIG. **1** to secure the seat attachment and convert the single stroller into a double stroller, as shown in FIG. **3**. In other example embodiments, the seat attachment **20** may include any type of connector portion having any geometric or non-geometric shape. The connector portion **21** may be of a solid or tubular construction and may be any cross-sectional shape including, but not limited to, circular, polygonal, square, rectangular, and triangular, for example. Other attachment mechanisms may be utilized to connect the seat attachment to the stroller **10** such as, but not limited to, a U-shaped bracket, a U-bolt, a pipe clamp, O-shaped bracket, screw, bolt, or other

clamping or attachment means. The attachment frame member **24** of the stroller **10** can have a complimentary and/or cooperating shape that allows the connector portion **21** to be secured to the attachment portion of the stroller.

FIG. **3** presents a side elevation view of a combination of the single stroller **10** of FIG. **1** attached to the seat attachment **20** of FIG. **2** according to one example embodiment of the disclosure. Referring now to FIG. **3**, the seat attachment **20** removably coupled to the single stroller **10** to form a double stroller. The double stroller configuration is shown with two stroller seats **13** in an inline configuration, though the other configurations, such as a stroller seat and a bassinet or a pram may also be supported on the double stroller. Further, the seat support element **22** of the seat attachment **20** may be capable of supporting the front stroller seat **13** in either a forward-facing or backward-facing position.

The example embodiment of the stroller **10** in FIG. **3** is shown only as an example of one type of stroller, the frame of the stroller **10** may be any of many possible configurations. Example embodiments of the seat attachment accessory may be configured to be used on any such configuration of a stroller. For example, in another example embodiment, the baby stroller may not include two front wheels, may not include a folding mechanism or may only include only one folding mechanism. In addition, the baby stroller may include additional features not included in baby stroller **10**. For example, the stroller may optionally include fixed front wheels, an entirely different frame configuration, or a storage basket underneath the seat of the stroller.

The seat support member may be any configuration capable of supporting the seat on the seat attachment **20**. FIG. **4** presents another example embodiment of a seat support member **40** for use with a car seat or other baby seat according to one example embodiment of the disclosure. Now referring to FIG. **4**, the seat support member **40** can include a main support **41**. The main support **41** can include a cradle for supporting a central portion of the seat. Another portion of the seat may rest against support bar **42**. In this example, the support bar **42** may be adjusted to accommodate seats of different shapes and sizes. The support bar **42** may be slid within the aperture **43** and locked in place when the support bar **42** is in the desired position to support a certain seat. The seat is, therefore, supported on two main supports **41** and the support bar **42**. The seat may be further secured in the seat attachment member **40** by wrapping belts **44** and **45** around the seat and locking the belts in this position with a buckle or other securing means.

FIG. **5** presents a side elevation view of a combination **50** of the single stroller **10** of FIG. **1** attached to an attachment in the form of a tricycle-like riding device according to one example embodiment of the disclosure. Referring to FIG. **5**, the combination **50** includes the stroller **10** and the seat attachment **51**. In one example, the seat attachment **51** is a tricycle-like attachment that includes a connector portion **52**, a frame **53** with a seat support element **56**, a seat **57**, and a wheel **55**. The tricycle-like attachment may be attached to stroller **10** to allow one child to be pushed in the stroller **10** and one child to ride the seat attachment **51**. The seat attachment **51** may be other shapes also such as cars, trucks, or animal shapes, for example.

In certain example embodiments, the stroller **10** can include an additional accessory attachment portion **58**. The accessory attachment portion **58** attaches to a frame member of the stroller **10**. An embodiment of the accessory attachment portion **58** is shown on FIG. **6**A. This embodiment is particularly useful for attaching a bag or purse **64**, as shown in FIG. **6**B, to the stroller **10**.

When using a stroller, parents or guardians typically carry other items, such as purses, grocery bags, cell phones, diapers, cleaning wipes, or other personal or baby related items. Some strollers have bottom storage baskets for placing such items. However, these storage baskets can be inconvenient to access or some light weight strollers do not include such storage baskets. Therefore, users of the stroller may hang purses or shopping bags on the handle of the stroller. This is convenient in that the bag is easy to access, but the weight of the bag on the handle may cause the stroller to be unbalanced and increase the tendency of the stroller to topple backwards. A heavy bag hung from the handle of a stroller may cause the stroller to tip backwards even with a child in the seat. The problem is worse if the stroller is facing uphill, on uneven terrain, being pushed up a curb, or occupied by a small child. The accessory attachment **58** may be attached to the frame of the stroller **10** by any of the clamping or attachment methods described above, for example. Preferably, the accessory attachment **58** is attached near the center of gravity of the stroller **10** to avoid creating an unbalanced condition of the stroller **10**. As shown in FIG. **6**A, the accessory attachment **58** is connected to stroller frame **12** of stroller **10** near the folding mechanism. Certain example embodiments of the accessory attachment **58** include a first end **61** for connecting to a stroller frame and a distal second end **62** for releasably connecting to the accessory **64**. The first end **61** can include an aperture **64** that may be connected to frame **12** of the stroller **10**. In certain example embodiments, the aperture **64** is on an angle, such that when the axis of the accessory attachment portion **58** is horizontal or substantially horizontal. The accessory attachment **58** may, optionally, include a rib **63** for securing the accessory **64** to the accessory attachment **58**. The rib **63** may be replaced with any other locking element or securing means including a friction fitting, a screwed fitting, or interference fitting, for example.

One example of an accessory **64** for attaching to an accessory attachment **58** is shown in FIG. **6**B. The accessory **64** in this example is a bag or purse. The accessory **64** can include an attachment portion **65** that is capable of being secured to the attachment portion **62** on the accessory attachment **58**. The accessory **64** may be secured on stroller **10** by securing attachment portion **65** to attachment portion **62**. The attachment portion **65** can slide over the cylindrical attachment portion **62** of accessory attachment **58**. The attachment portion **65** may include an interior annular recess that receives the rib **63** securing the accessory **58** to the stroller **10**. The accessory **64** is thus removably coupled to the stroller **10** in a center portion of the stroller as viewed from the side. Therefore, the bag or purse **64** is conveniently secured to stroller **10** while not contributing to an unbalanced condition of the stroller **10**.

FIG. **7** presents a perspective view of an attachment **70** for supporting a seat comprising one wheel **73** according to one example embodiment of the disclosure. Referring now to FIG. **7**, the example seat attachment **70** can include two seat attachment members **71**, two connector portions **72**, and a wheel **73**. The two seat attachment members **71** and the wheel **73** can be disposed or otherwise positioned in a triangular relationship. In certain example embodiments, the wheel **73** provides additional stability to a stroller **10** connected to the seat attachment **70** if a heavier child is placed in a seat attached to the seat attachment members **71**.

FIGS. **8**A-H present multiple views of a stroller apparatus capable of being converted from a single seat stroller to a double seat stroller through the use of removable seat attachment adapters, according to another example embodi-

ment of the disclosure. Referring now to FIGS. **8**A-H, the example stroller apparatus **80** can include a stroller frame **81** capable of supporting one or more stroller seats **85**, **86**. In one example embodiment, the stroller frame **81** can be made of one or more pieces fixedly coupled and/or removably coupled to one another. The stroller frame **81** can include portions that are hollow tubing and other portions that are solid core tubing and can be made from metal, plastic, or other materials known in the art.

In one example embodiment, the stroller frame **81** can include a pair of front wheel support frames **81***a* (only the left front wheel support frame is shown), a pair of back wheel support frames **81***b* (only the left back wheel support frame is shown), a pair of upper tube support frames **81***c* (only the left upper tube support frame is shown), a handle portion **81***d* having a first end coupled to the left upper tube support frame **81***c* and a distal second end coupled to the right upper tube support frame **81***c*, and foot rest support frame **81***f* having a first end coupled to the left front wheel support frame **81***a* (either directly or via the first seat attachment housing **1105** discussed below in FIG. **11**) and a distal second end coupled to the right front wheel support frame **81***a* (either directly of via the second seat attachment housing **1110** discussed below in FIG. **11**). In certain example embodiments, each front wheel support frame **81***a* can be fixedly coupled or rotatably coupled to its corresponding upper tube support frame **81***c*. Further, in certain example embodiments, the left upper tube support frame **81***c*, handle **81***d*, and right upper tube support frame **81***c* can be made from a single unitary piece of material, such as a single piece of bent, hollow-core metal or plastic tubing. Alternatively, each of the left upper tube support frame **81***c*, handle **81***d*, and right upper tube support frame **81***c* can be separate pieces of the same or different material that are coupled to one another.

The exemplary stroller frame **81** can also include a pair of folding mechanisms **81***e* (only the left folding mechanism is shown). In one example, each folding mechanism **81***e* can be coupled, either directly or indirectly to the corresponding front wheel support frame **81***a*, back wheel support frame **81***b*, and upper tube support frame **81***c* on the corresponding side (left and right) of the stroller **80**. In certain example embodiments, one or more of the corresponding front wheel support frame **81***a*, back wheel support frame **81***b*, and upper tube support frame **81***c* are rotatably coupled and rotatably adjustable about one or more axes defined through the folding mechanism **81***e*. As such, in certain example embodiments, the folding mechanism **81***e* allows the stroller **80** to be folded into a more compact size for storing or transportation. FIG. **8**B shows the stroller **10** in a folded configuration.

The example stroller **80** can also include at least one front wheel **82** coupled directly or indirectly (e.g., via one of the seat attachment housings **1105**, **1110**, as shown in FIG. **11**) to the stroller frame **81**. FIG. **8**B presents an example embodiment wherein the stroller **80** can include two front wheels **82**, one front wheel **82** being coupled to the stroller **80** adjacent the left front wheel support frame **81***a* and the second front wheel **82** being coupled to the stroller **80** adjacent the right front wheel support frame **81***a*. The example stroller **80** can also include at least one rear wheel **83** coupled directly or indirectly to the stroller frame **81** (e.g., a corresponding back wheel support frame **81***b*). FIG. **8**B presents an example embodiment wherein the stroller **80** can include two back wheels **83**, one back wheel **83** being coupled to the left back wheel support frame **81***b* and the second back wheel **83** coupled to the right back wheel support frame **81***b*.

The stroller **80** can also include a first stroller seat **86** either fixedly or removably coupled to the stroller frame **81**. For example, the first stroller seat **86** can include a left connector on the left side of the first stroller seat **86** and a right connector on the right side of the first stroller seat **86** to removably couple and decouple the first stroller seat from the stroller frame **81**. In one example, each of the left connector and right connector can be cavities in the first stroller seat **86** and can be configured to receive at least a portion of a corresponding seat attachment adapter (e.g., a bayonet connector) therein. In another example embodiment, the left connector and the right connector can each be tabs or slots that are configured to be coupled to corresponding slots or tabs along the stroller frame **81**.

The stroller **80** can also include a removable seat attachment adapter **84** that is removably coupled to the frame **81** such that the seat attachment adapter **84** can be decoupled from the frame **81** and stored when a second stroller seat is not being used with the stroller **80**. In one example embodiment, each removable seat attachment adapters can be coupled to the frame by coupling the adapter **84** into a seat attachment housing disposed along the frame **81**. In one example, the seat attachment housing (such as that described in FIGS. **11**-**14**C below) can be integrally formed with all or a portion of the stroller frame (e.g., integrally formed with front wheel support frame **81***a*). Alternatively, the seat attachment housing can be a separate apparatus that is coupled to the frame **81** or incorporated into the frame **81** by coupling multiple pieces of the frame **81** together. The frame **81** and each seat attachment housing can be made from the same or different materials, including, metals and plastics.

Though it cannot be seen in the side view of FIG. **8**A, a typical embodiment of the stroller **80** will include at least two removable seat attachment adapters **84** (at least one along each left and right side of the stroller **80** along the stroller frame **81**). For example, at least one removable seat attachment adapter can support each lateral side of the second stroller seat **85**. In certain example embodiments, each of the removable seat attachment adapters **84** may be made up of one piece or multiple parts. The removable seat attachment adapters **84** may be of any design capable of securely supporting a seat on the stroller. In one example, the removable seat attachment adapter **84** is configured to have a first end that is removably coupled to the frame **81** and/or seat attachment housing and a distal second end that is configured to be removably coupled to a second stroller seat **85**. The removable seat attachment adapter **84** is designed to be capable of supporting the second stroller seat **85** in front of the first stroller seat **86**. The stroller **80** may also include a storage basket **87**.

In certain examples, each of the removable seat attachment adapters **84** removably couples to the second stroller seat **85** at a vertical height that is substantially below the vertical height that the first stroller seat **86** attaches to the stroller frame **81**, thereby positioning the second stroller seat **85** at a vertical position that is substantially below the vertical position of the first stroller seat **86** when both the first stroller seat **86** and the second stroller seat **85** are coupled to the stroller **80**. The difference in vertical positioning of the second stroller seat **85** as compared to the first stroller seat **86** provides improved access to the first stroller seat **86** from the front of the stroller **10** when both stroller seats **85**, **86** are coupled to the stroller **80**. Further, in certain example embodiments, the front stroller seat **85** can be

positioned substantially over the front wheels **82** so that the stroller **80** remains stable. For example, the second stroller seat **85** can be located substantially over the front wheels **82** and the first stroller seat **86** can be located substantially over the rear wheels **83**. In addition, the seats **85**, **86** can be positioned such that the center of gravity of the stroller **80** is between the front **82** and rear **83** wheels.

In certain example embodiments, the removable seat attachment adapter **84** is capable of supporting a second stroller seat **85** such that a child in the second stroller seat **85** is substantially above the frame **81** of the stroller **80** that is substantially adjacent to the connection point of the second stroller seat **85**. This positioning of the second stroller seat **85** with respect to the frame **81** provides easier access to the second stroller seat **85**, does not block access to the storage basket **87**, allows more versatile configurations of the seats **85**, **86**, allows more variety of seats **85**, **86** to be attached to the frame **81**, and allows the parent or guardian to more easily monitor and see the child in each stroller seat **85**, **86**.

The example stroller of FIG. **8**A can also include the first stroller seat **86**. In certain example embodiments, the first stroller seat **86** can be located generally closer to the handle portion **81***d* than to the front wheels **82**. The first stroller seat **86** may be fixedly coupled or removably coupled to the frame **81**. In certain example embodiments wherein the first stroller seat **86** is removably coupled to frame **81**, the first stroller seat **86** may be adjustable from a forward-facing configuration to a rearward-facing configuration and vice-versa, as shown, for example, in FIGS. **8**B-**8**C. In addition, the second stroller seat **85**, when coupled to the corresponding removable seat attachment adapters **84**, can be adjustable from a forward-facing configuration to a rearward-facing configuration and vice-versa.

FIGS. **8**C-**8**H present additional examples of combinations for a variety of types of stroller seats that can be removably coupled to the stroller **80**. For example, in FIG. **8**D, the second stroller seat **86** can be replaced by an infant carrier **93** that can be removably coupled to each of the at least two removable seat attachment adapters **84** and the first stroller seat **86** can be coupled to the stroller in a forward-facing position. In another example, as shown in FIG. **8**E, the first stroller seat **86** can be replaced by a child carrier **91** that may be coupled to the frame **81** and positioned in the first seat position and the second stroller seat **85** can be coupled to the stroller **80** by way of the at least two removable seat attachment adapters **84** in a rearward-facing position. In yet another example, as shown in FIG. **8**F, the child carrier **91**, of FIG. **8**E, can be replaced with a pram **92** that is removably coupled to the stroller **80** in the first seat position. In still another example configuration, as shown in FIG. **8**G, two child carriers **91** may be removably coupled to the stroller frame **81**. For example, the front child carrier can be coupled to the stroller by way of each of the at least two removable seat attachment adapters **84**. In another example configuration, one of the child carriers **91** may be replaced with a pram or bassinet **92**, as shown in FIG. **8**H.

In certain example embodiments, the stroller **80** may also include a second set of removable seat attachment adapters **89** removably coupled to the frame **81** (or another pair of seat attachment housings substantially similar to those **1105**, **1110** described below) along the upper tube support frame **81***c*. The second set of removable seat attachment adapters **89** may be substantially the same as or exactly the same as the removable seat attachment adapters **84** described herein and may be coupled to the frame **81** (or corresponding seat attachment housings) in substantially the same manner as the removable seat attachment adapters **84**, as discussed in more detail below. The second set of removable seat attachment adapters **89** can include at least two adapters (at least one along each left and right side of the stroller **80**) for removably coupling and decoupling the first stroller seat **86** or any other form of seat described herein to the stroller frame **81** or corresponding seat attachment housing.

In one example embodiment, as shown in FIGS. **9**-**10**, the stroller **80** can include one or more, and preferably two, seat support elements **84**. The seat support element **84** is connected to and can be removably coupled to the stroller **80** front wheel support frame **81***a*. In certain example embodiments, the seat support element **84** is adjacent to the front wheel support portion **81***a* of frame **81**. Alternatively, the seat support element **84** is simply forward of and positioned at a vertical level lower than the attachment point for the first stroller seat **86** (FIG. **8**A) on the stroller **80**. The seat support element **84** is capable of supporting a second stroller seat **85** in front of the stroller seat **86** (see FIG. **8**A). This provides convenience and versatility to a user of the stroller **80**. Seat support element **84** may be fixedly attached or removably attached to front wheel support portion **81***a*. In certain example embodiments, the front seat **85** may be positioned substantially over the front wheels **15** so the stroller **80** remains stable. Preferably, the seats **85**, **86** should be positioned such that the center of gravity of the stroller **80** is between the front **15** and rear **14** wheels. If not an additional wheel may be placed on the attachment as previously described. The seat support element **84** can further include a seat connector **88**. In one example, the seat connector **88** can be disposed along a top end of the seat support element **84**. The example seat connector **88** may be a multipurpose general connector that allows different seats to be interchanged on the seat support element **84**. Any style seat may be configured to connect to the seat connector **88**, such as but not limited to, a stroller seat, a baby seat, a bassinet, a pram, a baby carrier, or a car seat, for example. As shown in FIG. **9**, the seat support element **84** can also include a connector portion **21**. The connector portion **21** is capable of connecting the seat attachment to the frame **81** via the attachment portion **17** and the slot **18**.

In certain example embodiments, the connector portion **21** of the seat attachment **20** has a cylindrical or substantially cylindrical shape. The connector portion **21** may be inserted into a cylindrical or substantially cylindrical slot **18** of the attachment portion **17** of the stroller **80** of FIG. **9**-**10** to secure the seat attachment and convert the single stroller into a double stroller, as shown in FIG. **8**A. The connector portion **21** may be of a solid or tubular construction and may be any cross-sectional shape including, but not limited to, circular, polygonal, square, rectangular, and triangular, for example.

FIG. **11** is a partial perspective view of the stroller **80** showing a seat attachment housing **1105** according to one example embodiment of the disclosure. Referring now to FIGS. **8**A and **11**, the example stroller **80** can include a first seat attachment housing **1105** and the second seat attachment housing **1110**. The first seat attachment housing **1105** can include a first end **1105***a* having a cavity for slidably receiving and fixedly or slidably coupling the first end **1105***a* to a first end of the left front wheel support frame **81***a*. For example, the left front wheel support frame **81***a* can have a substantially circular or oval cross-section and the cavity of the first end **1105***a* can have a corresponding circular or oval cross-section to slidably receive a portion of the left front wheel support frame **81***a* into the cavity. In one example, the left front wheel support frame **81***a* can be held in the cavity of the first end **1105***a* by a press fit hold. Alternatively, a

spring-loaded button on the left front wheel support frame **81***a* can be positioned into a corresponding opening along one of the sides of the first seat attachment housing **1105**.

The first seat attachment housing **1105** can also include a second end **1105***b* that includes a second cavity for coupling one of the front wheels **82** to the first seat attachment housing **1105**. The wheel **82** may be removably coupled to the second end **1105***b* of the first seat attachment housing **1105** by a press fit hold. Alternatively, a spring-loaded button **82***a* on the front wheel apparatus **82** can be positioned into the cavity of the second end **1105***b* and positioned into a corresponding opening **1115** along one of the sides of the first seat attachment housing **1105**. In one example embodiment, the first seat attachment housing **1105** can include an attachment arm **1120** extending off of one side of the first seat attachment housing **1105** in a generally orthogonal direction to the longitudinal axis of the housing **1105**. The attachment arm **1120** can include a free end **1105***c* that includes a cavity for receiving therein and fixedly coupling or slidably coupling the first seat attachment housing **1105** to a first end of the foot rest support frame **81***f*. The foot rest support frame **81***f* may be removably coupled to the free end **1105***c* of the attachment arm **1120** by a press fit hold. Alternatively, a spring-loaded button on the foot rest support frame **81***f* can be positioned into the cavity of the free end **1105***c* and positioned into a corresponding opening along one of the sides of the attachment arm **1120**.

The second seat attachment housing **1110** can include a first end **1110***a* having a cavity for slidably receiving and fixedly or slidably coupling the first end **1110***a* to a first end of the right front wheel support frame **81***a*. For example, the right front wheel support frame **81***a* can have a substantially circular or oval cross-section and the cavity of the first end **1110***a* can have a corresponding circular or oval cross-section to slidably receive a portion of the right front wheel support frame **81***a* into the cavity. In one example, the right front wheel support frame **81***a* can be held in the cavity of the first end **1110***a* by a press fit hold. Alternatively, a spring-loaded button on the right front wheel support frame **81***a* can be positioned into a corresponding opening along one of the sides of the second seat attachment housing **1110**.

The second seat attachment housing **1110** can also include a second end **1110***b* that includes a second cavity for coupling one of the front wheels **82** to the second seat attachment housing **1110**. The wheel **82** may be removably coupled to the second end **1110***b* of the second seat attachment housing **1110** by a press fit hold. Alternatively, a spring-loaded button on the front wheel apparatus **82** can be positioned into the cavity of the second end **1110***b* and positioned into a corresponding opening along one of the sides of the second seat attachment housing **1110**. In one example embodiment, the second seat attachment housing **1110** can include an attachment arm **1125** extending off of one side of the second seat attachment housing **1110** in a generally orthogonal direction to the longitudinal axis of the housing **1110**. The attachment arm **1125** can include a free end **1110***c* that includes a cavity for receiving therein and fixedly coupling or slidably coupling the second seat attachment housing **1110** to a second distal end of the foot rest support frame **81***f*. The second end of the foot rest support frame **81***f* may be removably coupled to the free end **1110***c* of the attachment arm **1125** by a press fit hold. Alternatively, a spring-loaded button on the foot rest support frame **81***f* can be positioned into the cavity of the free end **1110***c* and positioned into a corresponding opening along one of the sides of the attachment arm **1125**.

In certain example embodiments, all or a portion of each of the seat attachment housings **1105**, **1110** can be hollowed out with exterior sides. Each of the seat attachment housings **1105**, **1110** can include an opening **1130** positioned along a top side of the respective seat attachment housings **1105**, **1110**. The opening **1130** can provide access to an adapter receiving cavity (see FIG. **12**) for receiving therein at least a portion of the removable seat attachment adapter **84** (see FIG. **13**A). Each seat attachment housing **1105**, **1110** can also include a sliding door **1135**. The sliding door **1135** is configured to be manually adjustable from a closed position to an open position by slidably opening the door **1135** along the top side of the seat attachment housing **1105**, **1110** to provide access to the opening **1130** and adapter receiving cavity when the parent or guardian wants to insert and couple the removable seat attachment adapter **84** to the seat attachment housing **1105**, **1110** and frame **81** in order to couple the second stroller seat **85** to the stroller **80**. In one example, each seat attachment housing **1105**, **1110** can include one or more rails either disposed above or below a top surface of the seat attachment housing **1105**, **1110** that provide a guide way for slidably opening and closing the door **1135**. In one example, the door **1135** can include a tab **1140** extending upward from a top surface of the door **1135** to provide a gripping area to grip the door **1135** and slide it open and closed. For example, a parent or guardian can use a finger against the tab **1140** and apply pressure against the tab **1140** to open the door **1135** from a closed configuration to an open configuration.

The sliding door **1135** is also configured to be manually adjustable from an open configuration to a closed configuration by slidably closing the door **1135** along the top side of the seat attachment housing **1105**, **1110** to prevent access to the opening **1130** and adapter receiving cavity when the second stroller seat **85** is not in use. In one example, the parent or guardian can press a finger against the tab **1140** and apply pressure against the tab **1140** to slide the door **1135** from the open configuration to the closed configuration.

FIG. **12** is a partial perspective view of one of the seat attachment housings **1105**, **1110** according to one example embodiment of the disclosure. Referring now to FIGS. **8**A, **11**, and **12**, the door **1135** of the seat attachment housing **1105**, **1110** is shown having been slid into the open configuration exposing the opening **1130** and the adapter receiving cavity **1205**. The adapter receiving cavity **1205** can have any size and shape for removably coupling a portion of a removable seat attachment adapter **84** therein. In one example embodiment, all or a portion of the cross-sectional shape of the adapter receiving cavity **1205** can be keyed or have a keyed shape **1210** and all or a portion of the removable seat attachment adapter **84** can have a corresponding outer perimeter shape such that the removable seat attachment adapter **84** can only be inserted into the adapter receiving cavity **1205** in one, proper orientation.

FIGS. **13**A-C are partial perspective views of the removable seat attachment adapter **84** coupled to the seat attachment housing **1105** according to one example embodiment of the disclosure. Now referring to FIGS. **8**A, **11**, **12**, and **13**A-C, once the door **1135** has been moved into the open configuration exposing the opening **1130** and the adapter receiving cavity **1205**, a first end **84***a* of the removable seat attachment adapter **84** can be inserted into the adapter receiving cavity **1205**. In certain example embodiments, the adapter receiving cavity **1205** can include one or more stop flanges **1315**, **1320** that extend out from an inner surface of the cavity **1205** and into the cavity area to abut against a bottom side of the first end **84***a* of the removable seat

attachment adapter **84** when the adapter **84** has penetrated a sufficient amount into the adapter receiving cavity **1205**. Once the adapter **84** is inserted into the cavity **1205** and removably coupled to the seat attachment housing **1105**, a stroller seat can be removable coupled to a seat connector disposed on or adjacent to the second end **84***b* of the removable seat attachment adapter **84**. The seat connector on the second end **84***b* can be a multipurpose general connector that allows different seats to be interchangeably connected to the removable seat attachment adapter **84**. Any style seat may be configured to connect to the seat connector including, but not limited to, a stroller seat, a baby seat, a bassinet, a pram, a baby carrier, or a car seat, for example.

The removable seat attachment adapter **84** can also include a stop collar **1335** disposed a predetermined distance up from the first end **84***a* of the adapter **84**. In one example embodiment, the stop collar **1335** is sized and shaped so that it will not fit into the opening **1130** and will not fit into the adapter receiving cavity **1205** as the first end **84***a* of the adapter **84** is being inserted into the adapter receiving cavity **1205**. The size and shape of the outer surface of the stop collar **1335**, being greater than that of the outer surface of the previous portion of the first end **84***a* inserted into the adapter receiving cavity **1205** will contact and abut an outer surface of the seat attachment housing **1105** when the adapter **84** has penetrated a sufficient amount into the adapter receiving cavity **1205**.

The removable seat attachment adapter **84** can also include a spring-loaded latching tab **1305** disposed along one side of the adapter **84** between the first end **84***a* and the stop collar **1335**. In certain example embodiments, the spring-loaded latching tab **1305** can be spring biased into an extended position (as shown in FIG. **13**B) via, for example, a spring (not shown). As the adapter **84** is first being inserted into the adapter receiving cavity **1205**, the width of the adapter **84** at the point of the spring-loaded latching tab **1305**, is greater than the width of the cavity **1205**, which causes one or more side walls of the cavity **1205** to apply a force to the spring-loaded latching tab **1305** and push it inward from the extended position towards a retracted position, thereby allowing the first end **84***a* of the adapter **84** to continue moving into the adapter receiving cavity **1205**. When the adapter **84** is inserted into the adapter receiving cavity **1205** a sufficient distance (which can be configurable based on the design specifics on the stroller), the spring-loaded latching tab **1305** can be positioned adjacent a tab receiver **1307**. The tab receiver **1307** can be a cut-out or opening along one of the side walls of the cavity **1205** that allows the tab **1305** to move back to the extended position. The tab receiver **1307** can include a tab retainer surface **1310** that abuts a top side of the tab **1305** and prevents the removable seat attachment adapter **84** from being removed from the adapter receiving cavity **1205** while the spring-loaded latch tab **1305** is in the extended position.

The removable seat attachment adapter **84** can also include a tab release button **1330** that is operatively coupled to and configured to move the spring-loaded latching tab **1305** from the extended position to the retracted position via, for example, a guide wire **1325** or other attachment mechanism. For example, when the removable seat attachment adapter **84** is latched into the seat attachment housing **1105**, a parent or guardian can grab the removable seat attachment adapter **84** and depress the tab release button **1330**, causing the guide wire to pull the spring-loaded latching tab **1305** inward from the extended position to the retracted position with a force greater than the spring biasing force on the tab **1305** and allowing the parent or guardian to remove the removable seat attachment adapter **84** from the adapter receiving cavity **1205** using only a single hand. Thereby, the ease of decoupling the removable seat attachment adapter **84** from the stroller frame **81** is improved.

In addition, as shown in FIG. **13**B, in certain example embodiments, the bottom end of the adapter receiving cavity **1205** and corresponding bottom end of the seat attachment housing **1105** can be open **1340** to the environment. Leaving the bottom side of the cavity **1205** open **1340** to the environment helps to prevent liquid and material build-up in the cavity **1205** when the removable seat attachment adapter **84** is not coupled into the cavity **1205** by allowing the liquid and materials to pass through the cavity **1205** and out of the bottom of the seat attachment housing **1105**. This is especially beneficial when the parent or guardian removes the removable seat attachment adapter **84** from the cavity **1205** but does slide the door **1135** into the closed position to close up the opening **1130**.

FIGS. **14**A-C are partial perspective views of an alternative embodiment of the seat attachment housing **1405**, **1410** according to another example embodiment of the disclosure. Referring now to FIGS. **8**A, **11**, and **14**A-C, the seat attachment housings **1405**, **1410** are substantially the same as the seat attachment housings **1105**, **1110** described in FIGS. **11**-**13**C except for as described below. Therefore, the description of the seat attachment housings **1105**, **1110** in FIGS. **11**-**13**C above is incorporated herein for the alternative seat attachment housings **1405**, **1410**, except with regard to the distinctions described below.

As shown in FIG. **14**C, each seat attachment housing **1405**, **1410** includes an opening or open end **1130** positioned along a top side of the respective seat attachment housings **1405**, **1410**. The opening **1130** can provide access to an adapter receiving cavity **1205**. Each seat attachment housing **1405**, **1410** also includes one or more stop flanges **1315**, **1320** that extend out from an interior wall **1411** of the cavity **1205** and into the cavity area. In addition, the bottom end of the adapter receiving cavity **1205** and corresponding bottom end of each seat attachment housing **1405**, **1410** can have an opening or open end **1340** to the environment and with the cavity **1205** and opening **1130** provides a through-hole **1413** through the seat attachment housing **1405**, **1410**. Each seat attachment housing **1405**, **1410** can include a rotating door **1415** rotatably coupled to the seat attachment housing **1405**, **1410**. For example, the rotating door **1415** can have a fixed end that is rotatably coupled to the top side of the seat attachment housing **1405**, **1410** or an interior wall **1411** of the opening **1130** or adapter receiving cavity **1205** by way of or more hinges **1420**. Alternatively, other devices may be used to allow the door **1415** to rotate from a closed configuration **1415***a* to an open configuration **1415***b*, as shown in FIG. **14**C. In certain example embodiments, the door **1415** and/or the rotating mechanism or hinge **1420** that the door **1415** is coupled to can be spring-biased into the closed configuration **1415***a* through the use of a spring or other biasing means. Spring-biasing the door **1415** into a closed configuration **1415***a* can help to prevent fluids and other material contaminants from entering the adapter receiving cavity **1205** when the removable seat attachment adapter **84** is not coupled into the adapter receiving cavity **1205**.

When a parent or guardian wants to add a second stroller seat **85** to the stroller **80**, they can insert the removable seat attachment adapter **84** into the adapter receiving cavity **1205** by pressing or applying a force with the first end **84***a* of the removable seat attachment adapter **84** against the top side of the rotating door **1415** with a force that is greater than the spring-biasing force. This will cause the door **1415** to rotate

from the closed configuration **1415***a* towards the open configuration **1415***b* and allow the first end **84***a* of the removable seat attachment adapter to enter into the adapter receiving cavity **1205** and be coupled to the seat attachment housing **1405**, **1410**.

When the parent or guardian removes the removable seat attachment adapter **84**, as described above with regard to FIGS. **13**A-C, as the first end **84***a* of the removable seat attachment adapter **84** exits the adapter receiving cavity **1205** and opening **1130**, the spring-bias of the hinge **1420** or door **1415** will cause the door **1415** to automatically rotate from the open configuration **1415***b* to the closed configuration **1415***a*, thereby limiting access to the opening **1130** and the adapter receiving cavity **1205** from the top side of the seat attachment housing **1405**, **1410**.

While the above description contains many specifics, these specifics should not be construed as limitations on the scope of the disclosure, but merely as exemplifications of the disclosed embodiments. Those skilled in the art will envision many other possible variations that are within the scope of the disclosure.

What is claimed is:

1. A stroller, comprising:

a stroller frame comprising:

a first upper tube support frame;

a second upper tube support frame;

a first front wheel support frame rotatably adjusted to be substantially parallel with respect to the first upper tube support frame when the stroller frame is unfolded from a folded configuration;

a second front wheel support frame rotatably adjusted to be substantially parallel with respect to the second upper tube support frame when the stroller frame is unfolded from a folded configuration;

a first back wheel support frame rotated with respect to the first upper tube support frame; and

a second back wheel support frame rotated with respect to the second upper tube support frame;

a plurality of wheels comprising at least one front wheel and a plurality of back wheels;

a first seat coupled along the first upper tube support frame and the second upper tube support frame at a first vertical position of the stroller frame;

a first seat attachment adapter coupled to the first front wheel support frame at a second vertical position of the stroller frame that is below the first vertical position;

a second seat attachment adapter coupled to the second front wheel support frame at a third vertical position of the stroller frame that is below the first vertical position;

wherein a second seat is removably coupled to the first seat attachment adapter and the second seat attachment adapter to position the second seat at a fourth vertical position that is below the first vertical position and wherein the second vertical position and the third vertical position are at a same vertical height.

2. The stroller of claim **1**, further comprising:

a first seat attachment housing disposed adjacent the first front wheel support frame at the second vertical position;

a second seat attachment housing disposed adjacent the second front wheel support frame at the third vertical position;

wherein the first seat attachment adapter is coupled to the first seat attachment housing and the second seat attachment adapter is coupled to the second seat attachment housing.

3. The stroller of claim **2**, wherein the first seat attachment housing extends into the first front wheel support frame and the second seat attachment housing extends into the second front wheel support frame.

4. The stroller of claim **2**, wherein each of the first seat attachment adapter and the second seat attachment adapter has a first end and a distal second end.

5. The stroller of claim **4**, wherein the first end comprises a connector portion and is coupled to one of the first seat attachment housing and the second seat attachment housing.

6. The stroller of claim **4**, wherein the second seat is removably coupled to the second end.

7. The stroller of claim **1**, wherein the first seat is one of a baby seat, a car seat, a stroller seat, a bassinet, a baby carrier, or a pram and the second seat is one of a second baby seat, a second car seat, a second stroller seat, a second bassinet, a second baby carrier, or a second pram.

8. The stroller of claim **1**, further comprising:

a third seat attachment adapter coupled to the stroller frame at the first vertical position; and

a fourth seat attachment adapter coupled to the stroller frame at the first vertical position;

wherein the first seat is removably coupled to the third seat attachment adapter and the fourth seat attachment adapter.

9. The stroller of claim **1**, further comprising a handle comprising a first end coupled to the first upper tube support frame and a distal second end coupled to the second upper tube support frame.

10. A stroller, comprising:

a stroller frame comprising:

a first upper tube support frame;

a second upper tube support frame;

a front wheel support frame rotatably adjusted to be substantially parallel with respect to the first upper tube support frame when the stroller frame is unfolded from a folded configuration;

a back wheel support frame rotatably adjusted to be substantially parallel with respect to the first upper tube support frame when the stroller frame is unfolded from a folded configuration; and

a plurality of wheels comprising at least one front wheel and a plurality of back wheels;

a first seat coupled along the first upper tube support frame and the second upper tube support frame at a first vertical position of the stroller frame;

a first seat attachment adapter coupled to the front wheel support frame at a second vertical position of the stroller frame that is below the first vertical position;

a second seat attachment adapter coupled to the front wheel support frame at a third vertical position of the stroller frame that is below the first vertical position;

wherein a second seat is removably coupled to the first seat attachment adapter and the second seat attachment adapter to position the second seat at a fourth vertical position that is below the first vertical position.

11. The stroller of claim **10**, wherein the front wheel support frame comprises a first front wheel support frame member and a second front wheel support frame member.

12. The stroller of claim **10**, wherein the back wheel support frame comprises a first back wheel support member and a second back wheel support member.

13. The stroller of claim **10**, further comprising:

a first seat attachment housing disposed adjacent the front wheel support frame at the second vertical position;

a second seat attachment housing disposed adjacent the front wheel support frame at the third vertical position;

wherein the first seat attachment adapter is coupled to the first seat attachment housing and the second seat attachment adapter is coupled to the second seat attachment housing.

14. The stroller of claim **13**, wherein each of the first seat attachment adapter and the second seat attachment adapter comprises:

a first end comprising a connector portion coupled to one of the first seat attachment housing and the second seat attachment housing; and

a distal second end, wherein the second seat is removably coupled to the second end.

15. The stroller of claim **10**, wherein the first seat is one of a baby seat, a car seat, a stroller seat, a bassinet, a baby carrier, or a pram and the second seat is one of a second baby seat, a second car seat, a second stroller seat, a second bassinet, a second baby carrier, or a second pram.

16. The stroller of claim **10**, further comprising:

a third seat attachment adapter coupled to the first upper tube support frame at the first vertical position; and

a fourth seat attachment adapter coupled to the second upper tube support frame at the first vertical position;

wherein the first seat is removably coupled to the third seat attachment adapter and the fourth seat attachment adapter.

17. A stroller, comprising:

a stroller frame comprising:

a first upper tube support frame;

a second upper tube support frame;

a first back wheel support frame;

a second back wheel support frame;

a first front wheel support frame;

a second front wheel support frame;

a plurality of wheels comprising at least one front wheel and a plurality of back wheels;

a first seat coupled to the stroller frame at a first vertical position of the stroller frame;

a first seat attachment housing disposed adjacent the first front wheel support frame:

a second seat attachment housing disposed adjacent the second front wheel support frame;

a first seat attachment adapter coupled to the first seat attachment housing at a second vertical position of the stroller frame that is below the first vertical position when the first upper tube support frame is substantially parallel with the first front wheel support frame when the stroller frame is unfolded from a folded configuration;

a second seat attachment adapter coupled to the second seat attachment housing at a third vertical position of the stroller frame that is below the first vertical position when the second upper tube support frame is substantially parallel with the second front wheel support frame when the stroller frame is unfolded from a folded configuration;

wherein the first seat is coupled along the first upper tube support frame and the second upper tube support frame and wherein a second seat is removably coupled to the first seat attachment adapter and the second seat attachment adapter.

18. The stroller of claim **17**, wherein each of the first seat attachment adapter and the second seat attachment adapter comprises:

a first end comprising a connector portion coupled to one of the first seat attachment housing and the second seat attachment housing; and

a distal second end, wherein the second seat is removably coupled to the second end.

19. The stroller of claim **17**, further comprising a handle comprising a first end coupled to the first upper tube support frame and a distal second end coupled to the second upper tube support frame.

20. The stroller of claim **17**, further comprising:

a third seat attachment adapter coupled to the first upper tube support frame; and

a fourth seat attachment adapter coupled to the second upper tube support frame;

wherein the first seat is removably coupled to the third seat attachment adapter and the fourth seat attachment adapter.

* * * * *