US011505231B1

(12) **United States Patent**
Zehfuss

(10) **Patent No.: US 11,505,231 B1**
(45) **Date of Patent: Nov. 22, 2022**

(54) **REMOVABLE SEAT ATTACHMENT FOR A STROLLER**

(71) Applicant: **Baby Jogger, LLC**, Atlanta, GA (US)

(72) Inventor: **Mark Zehfuss**, Glen Allen, VA (US)

(73) Assignee: **BABY JOGGER, LLC**, Atlanta, GA (US)

(*) Notice: Subject to any disclaimer, the term of this patent is extended or adjusted under 35 U.S.C. 154(b) by 0 days.

(21) Appl. No.: **17/877,323**

(22) Filed: **Jul. 29, 2022**

Related U.S. Application Data

(63) Continuation of application No. 16/903,292, filed on Jun. 16, 2020, which is a continuation of application
(Continued)

(51) **Int. Cl.**

B62B 9/00	(2006.01)
B62B 9/10	(2006.01)
B62B 7/00	(2006.01)
B62B 7/14	(2006.01)
B62B 9/28	(2006.01)

(Continued)

(52) **U.S. Cl.**
CPC ***B62B 9/102*** (2013.01); ***B62B 7/006*** (2013.01); ***B62B 7/008*** (2013.01); ***B62B 7/14*** (2013.01); ***B62B 9/12*** (2013.01); ***B62B 9/28*** (2013.01); ***B62K 5/02*** (2013.01); ***B62K 27/003*** (2013.01); ***B62M 1/38*** (2013.01); *B62B 3/008* (2013.01); *B62B 7/145* (2013.01); *B62K 13/00* (2013.01)

(58) **Field of Classification Search**
CPC B62B 7/008; B62B 7/00; B62B 7/006; B62B 7/14; B62B 7/142; B62B 7/145; B62B 9/12; B62B 9/28; B62B 9/102
See application file for complete search history.

(56) **References Cited**

U.S. PATENT DOCUMENTS

4,216,974 A * 8/1980 Kassai B62B 7/062 280/42
4,544,178 A * 10/1985 Al-Sheikh B62B 7/062 280/658

(Continued)

FOREIGN PATENT DOCUMENTS

CN 2188062 Y 1/1995
CN 3463874 S 7/2005

(Continued)

Primary Examiner — James M Dolak
(74) *Attorney, Agent, or Firm* — Eversheds Sutherland (US) LLP

(57) **ABSTRACT**

Embodiments include strollers having removable seats. An example stroller may include rear wheels, front wheels, and a frame including a handle portion, a rear wheel support portion, a front wheel support portion and a folding mechanism connecting the front wheel support portion and the handle portion in both an unfolded configuration and in a folded configuration. The frame may include a stroller seat support portion positioned at a first vertical position adjacent the handle portion, and a front seat attachment configured for attachment to the front wheel support portion at a second vertical position substantially lower than the first vertical position. The front seat attachment may be configured to support the front stroller seat substantially over the front wheels so that a center of gravity of the stroller system is between the front wheels and the rear wheels.

22 Claims, 18 Drawing Sheets

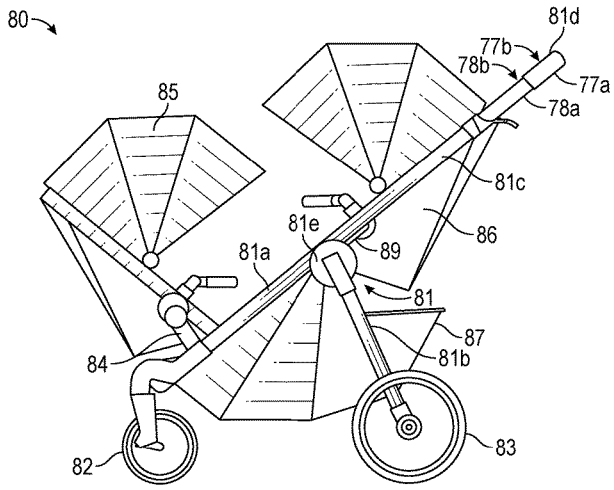

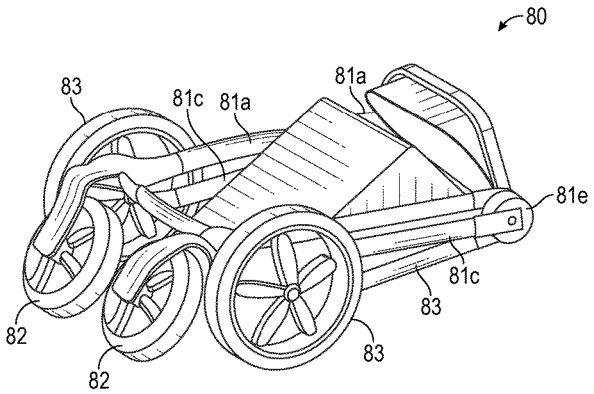

Related U.S. Application Data

No. 15/912,901, filed on Mar. 6, 2018, now Pat. No. 10,730,543, which is a continuation of application No. 15/225,326, filed on Aug. 1, 2016, now Pat. No. 9,944,305, which is a continuation-in-part of application No. 14/597,420, filed on Jan. 15, 2015, now Pat. No. 9,403,550, which is a continuation of application No. 14/261,558, filed on Apr. 25, 2014, now Pat. No. 8,955,869, which is a continuation of application No. 12/631,375, filed on Dec. 4, 2009, now abandoned.

(60) Provisional application No. 62/311,224, filed on Mar. 21, 2016, provisional application No. 61/119,920, filed on Dec. 4, 2008.

(51) **Int. Cl.**

B62K 27/00	(2006.01)
B62K 5/02	(2013.01)
B62M 1/38	(2013.01)
B62B 9/12	(2006.01)
B62B 3/00	(2006.01)
B62K 13/00	(2006.01)

(56) **References Cited**

U.S. PATENT DOCUMENTS

5,167,425	A	12/1992	Chen	
5,338,096	A	8/1994	Huang	
5,988,670	A	11/1999	Song et al.	
6,045,145	A	4/2000	Lan	
6,086,087	A	7/2000	Yang	
D429,476	S	8/2000	Gehr	
D430,076	S	8/2000	Gehr	
6,102,431	A *	8/2000	Sutherland	B62B 7/062 280/646
6,102,432	A *	8/2000	Cheng	B62B 9/203 280/47.36
6,209,892	B1 *	4/2001	Schaaf	B62B 7/145 280/47.38
6,267,406	B1	7/2001	Huang	
6,286,844	B1 *	9/2001	Cone, II	B62B 9/28 280/658
6,513,827	B1	2/2003	Barenbrug	
6,991,248	B2 *	1/2006	Valdez	B62B 7/08 280/658
7,377,537	B2	5/2008	Li	
7,475,900	B2 *	1/2009	Cheng	B62B 7/08 280/47.38
D593,459	S *	6/2009	Liao	D12/129
7,563,170	B2	7/2009	Bellows et al.	
7,938,435	B2	5/2011	Sousa et al.	
7,971,897	B2	7/2011	Pike et al.	
8,313,115	B2	11/2012	Cheng	
8,602,441	B2	12/2013	Li	
9,403,550	B2	8/2016	Zehfuss	
9,840,168	B2 *	12/2017	Yi	B62B 7/142
9,849,903	B1 *	12/2017	Lai	B62B 7/142
9,884,640	B2 *	2/2018	Li	B62B 7/08
9,924,806	B2 *	3/2018	Penello	B62B 9/12
9,944,305	B2 *	4/2018	Lee	B62B 7/006
9,956,979	B1 *	5/2018	Fernsten	B62B 9/005
10,207,731	B2 *	2/2019	Taylor	B62B 7/008
10,449,987	B2	10/2019	Gibson	
10,556,610	B2	2/2020	Rolicki et al.	
10,899,377	B2	1/2021	Eggert-Crowe et al.	
11,091,186	B2	8/2021	Zhang	
11,192,568	B2	12/2021	Lee et al.	
11,203,371	B2	12/2021	Zhong	
11,208,135	B2	12/2021	Haut et al.	
11,208,136	B2	12/2021	Taylor et al.	
11,220,282	B2	1/2022	Chaudeurge	
11,292,499	B2	4/2022	Rolicki et al.	
11,338,836	B2	5/2022	Perrot	
11,370,468	B2 *	6/2022	Young	B62B 7/008
2006/0290107	A1	12/2006	Powers	
2010/0013281	A1 *	1/2010	Chen	B62B 9/12 297/243

FOREIGN PATENT DOCUMENTS

CN	2759883	Y	2/2006
CN	2784272	Y	5/2006
CN	2841450	Y	11/2006
CN	201214440	Y	4/2009
CN	101306695	B	11/2010
EM	000822556-0003		7/2007
EM	001001572-0002		11/2008
TW	129880-0001		7/2009

* cited by examiner

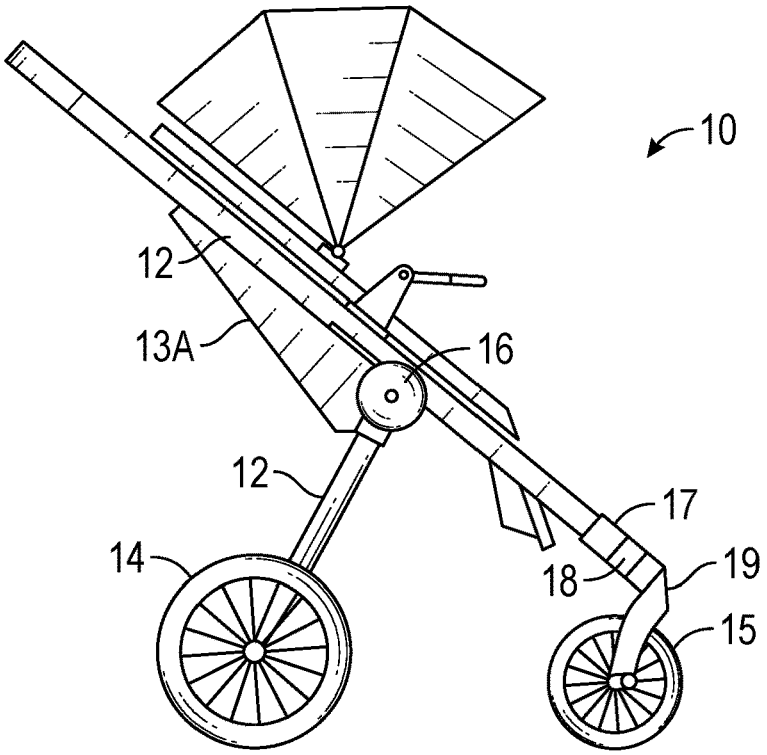

FIG. 1

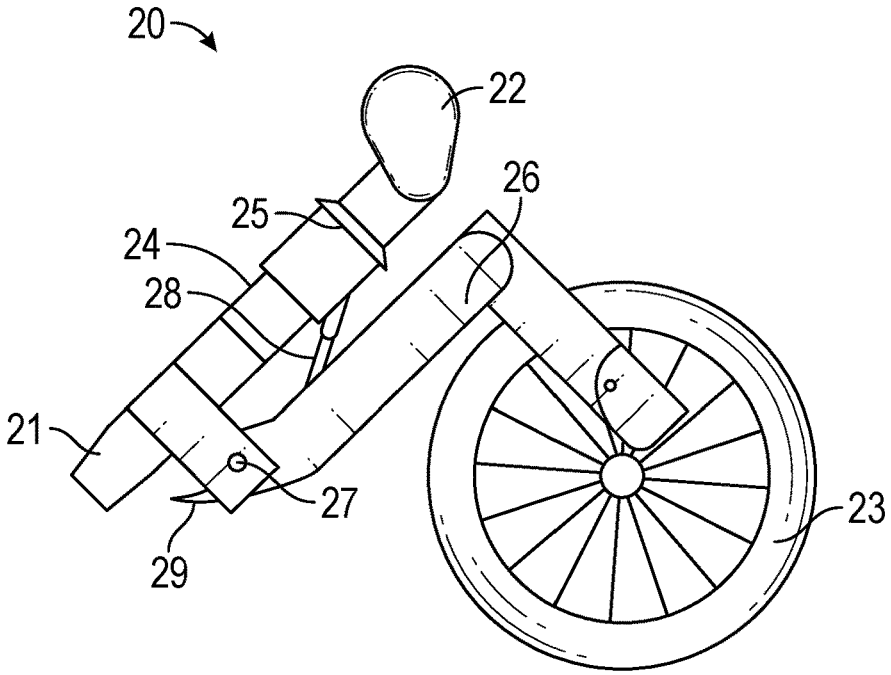

FIG. 2

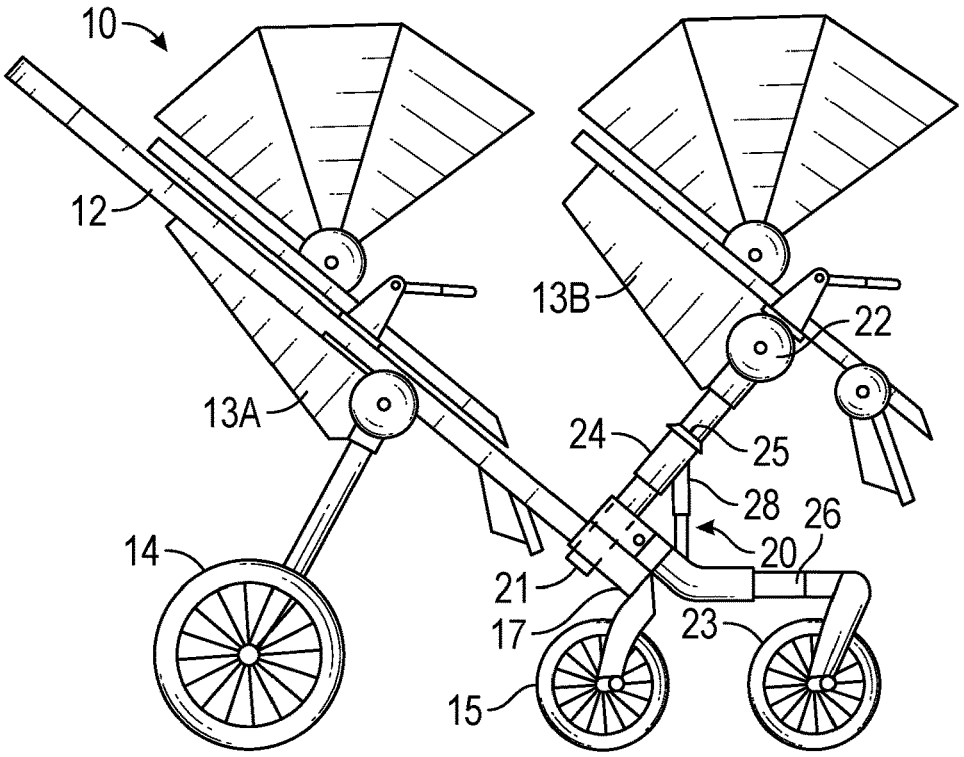

FIG. 3

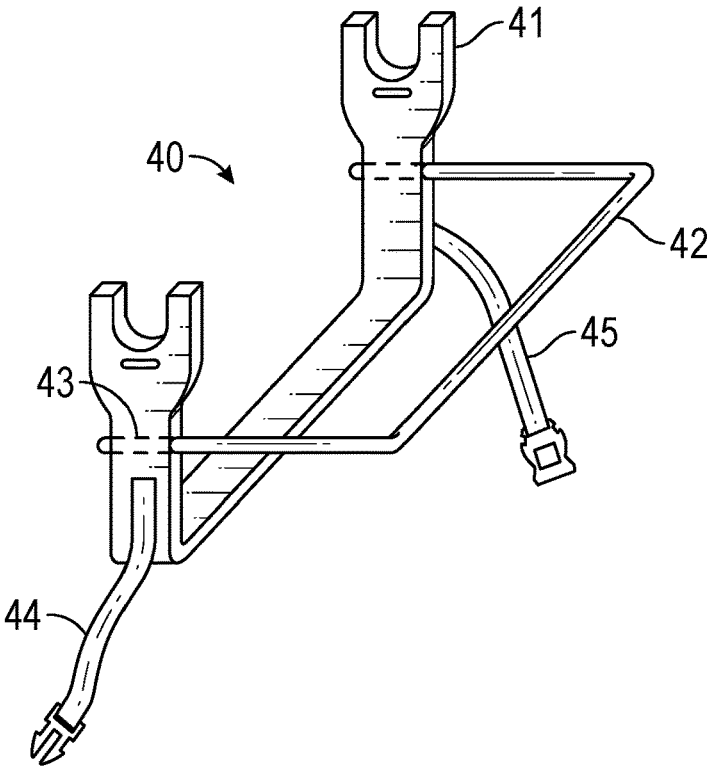

FIG. 4

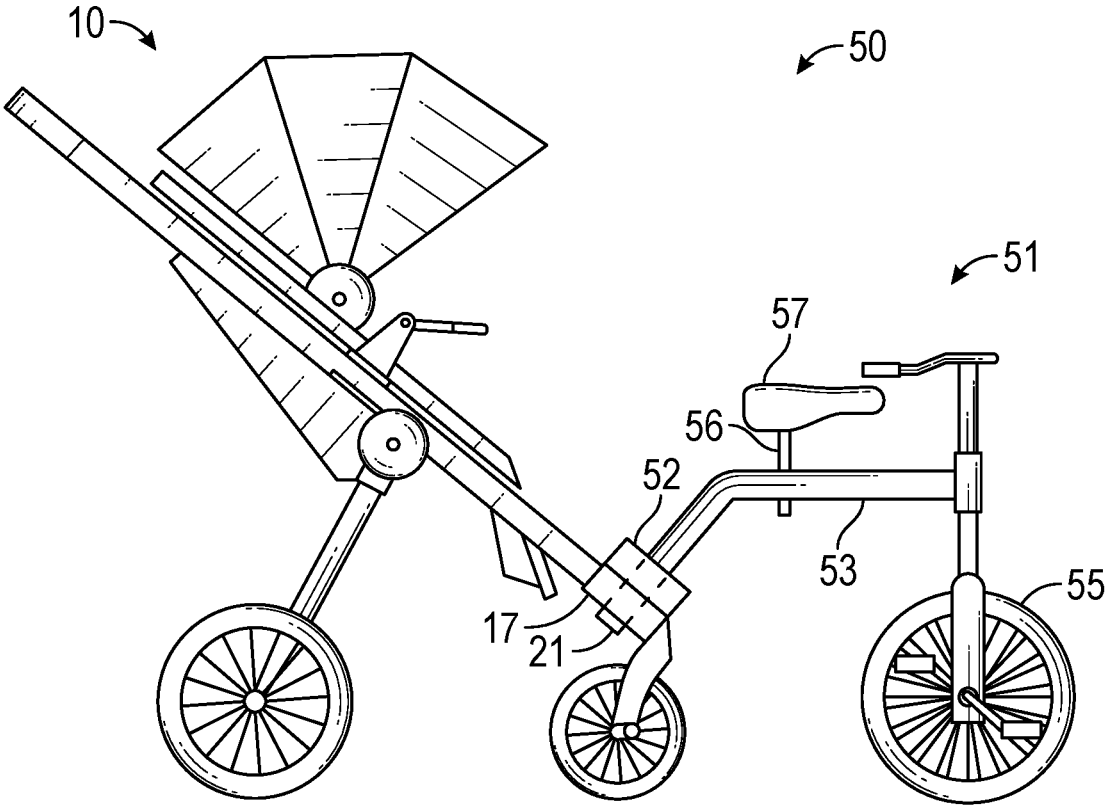

FIG. 5

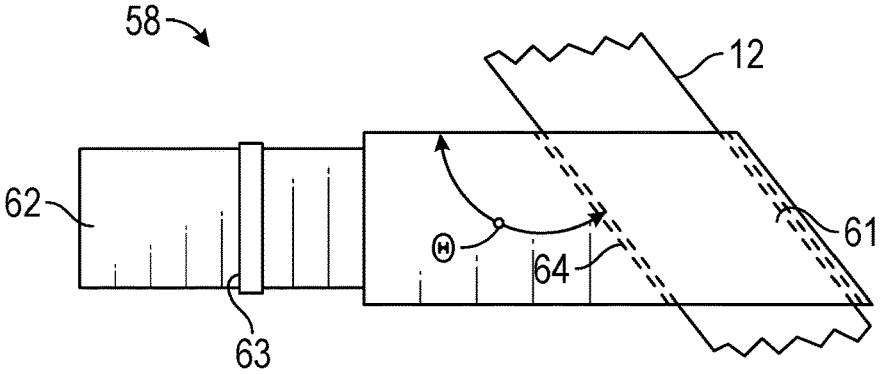

FIG. 6A

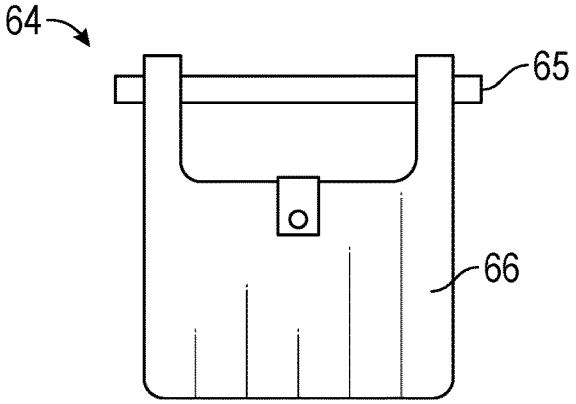

FIG. 6B

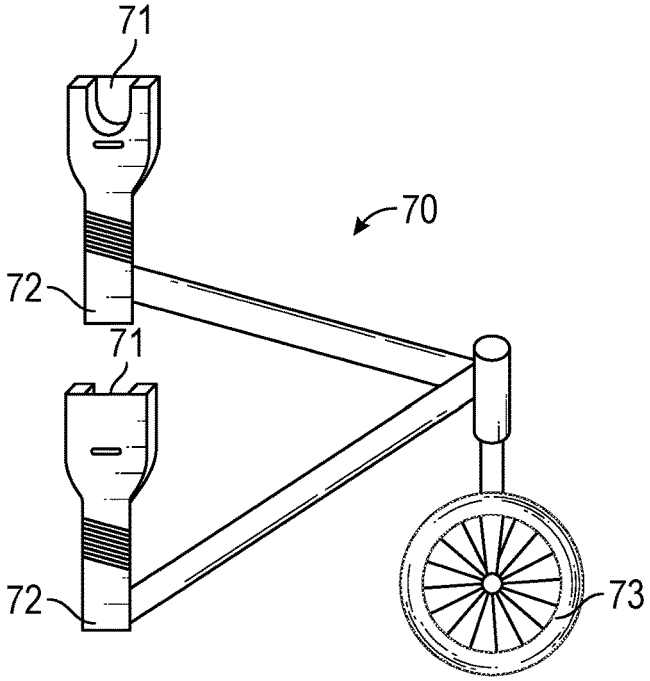

FIG. 7

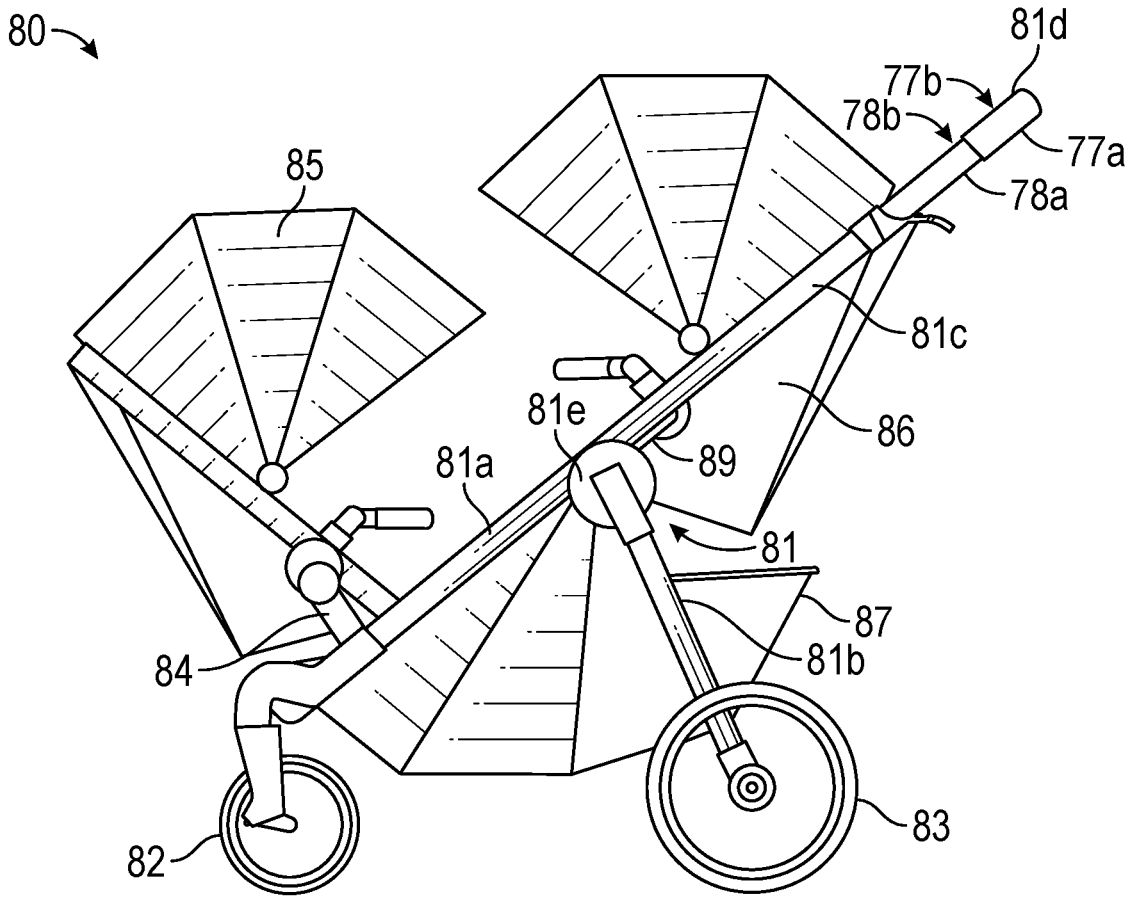

FIG. 8A

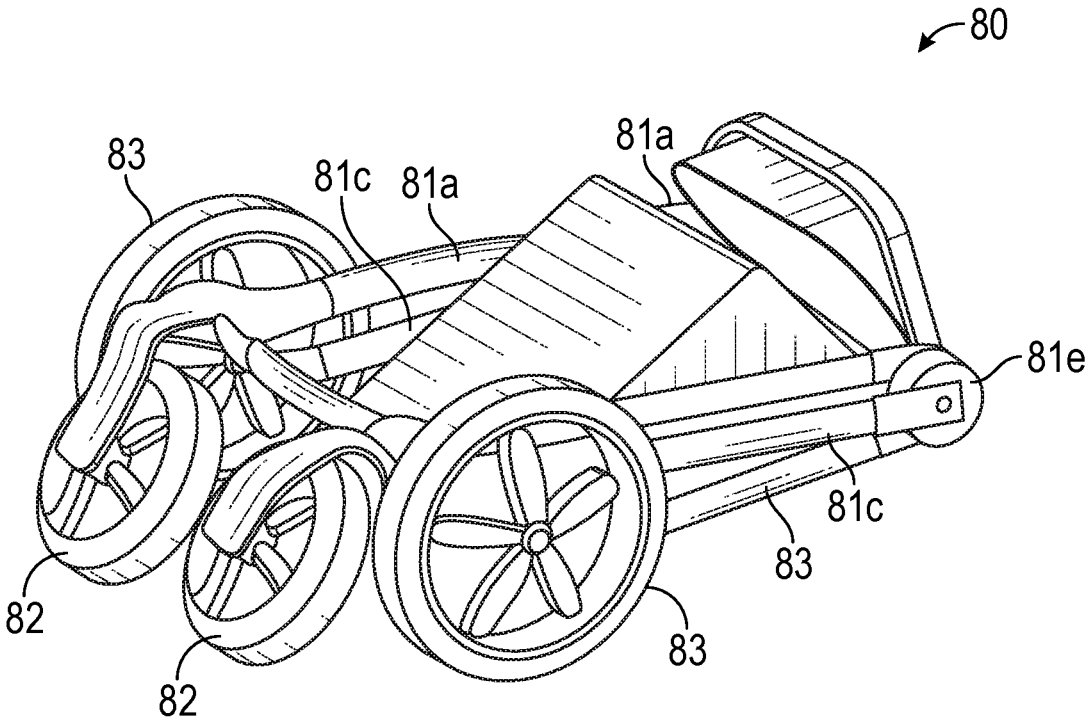

FIG. 8B

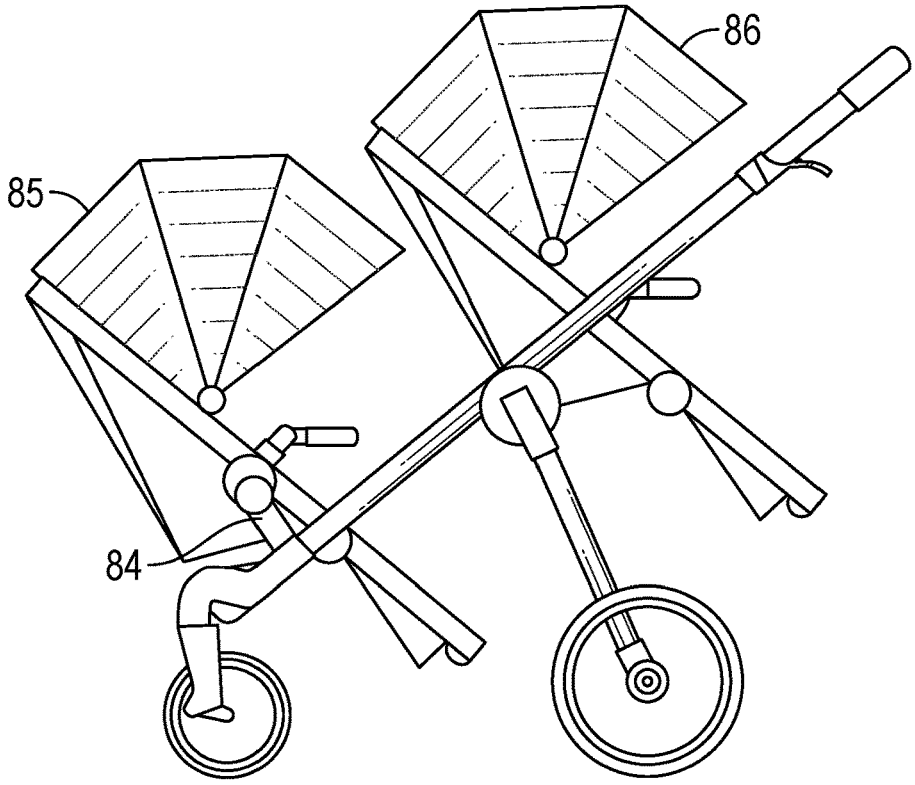

FIG. 8C

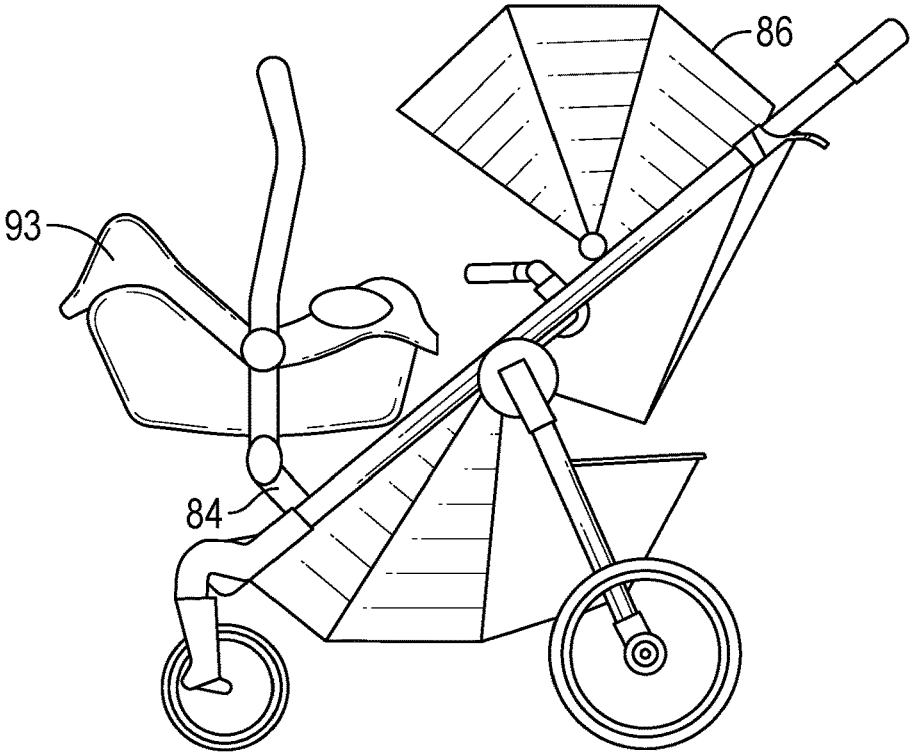

FIG. 8D

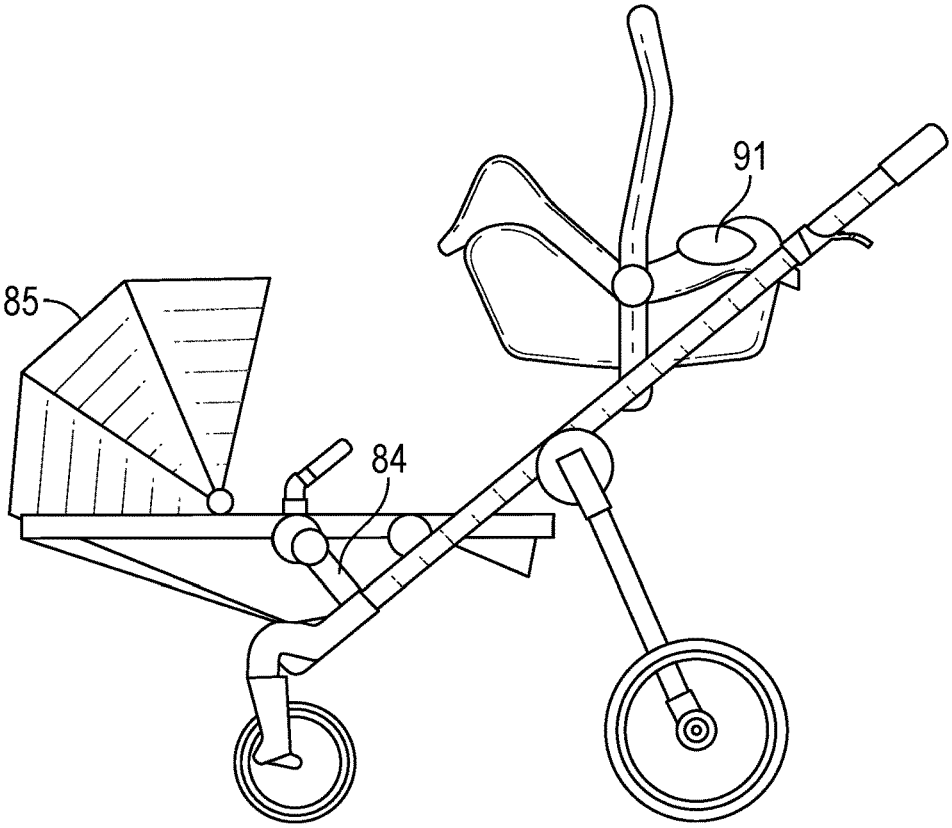

FIG. 8E

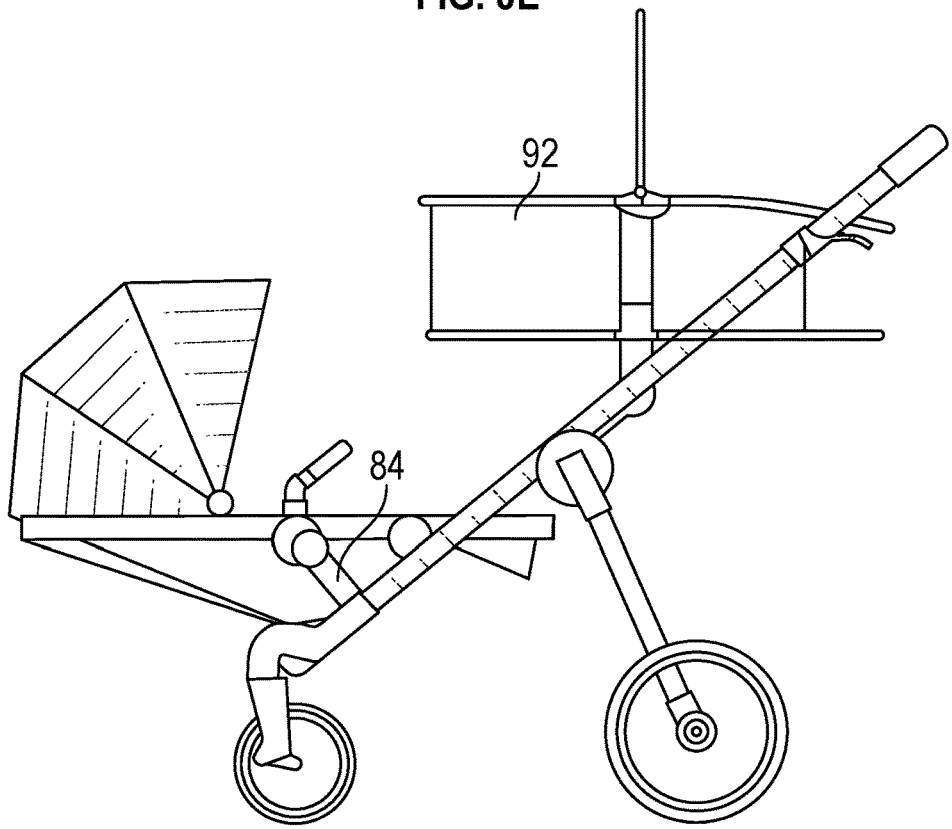

FIG. 8F

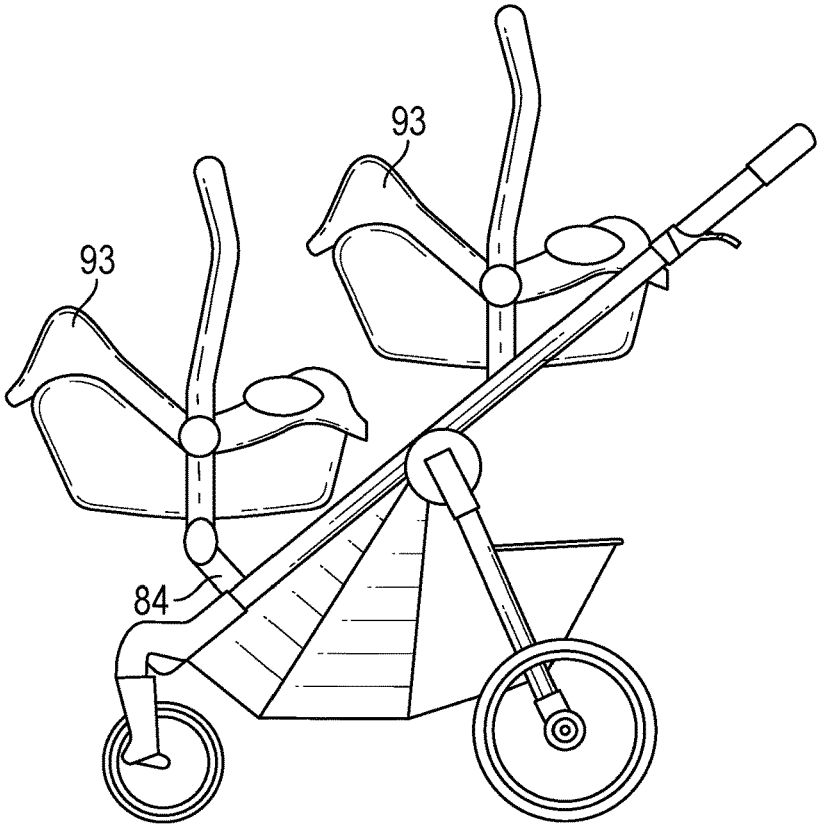

FIG. 8G

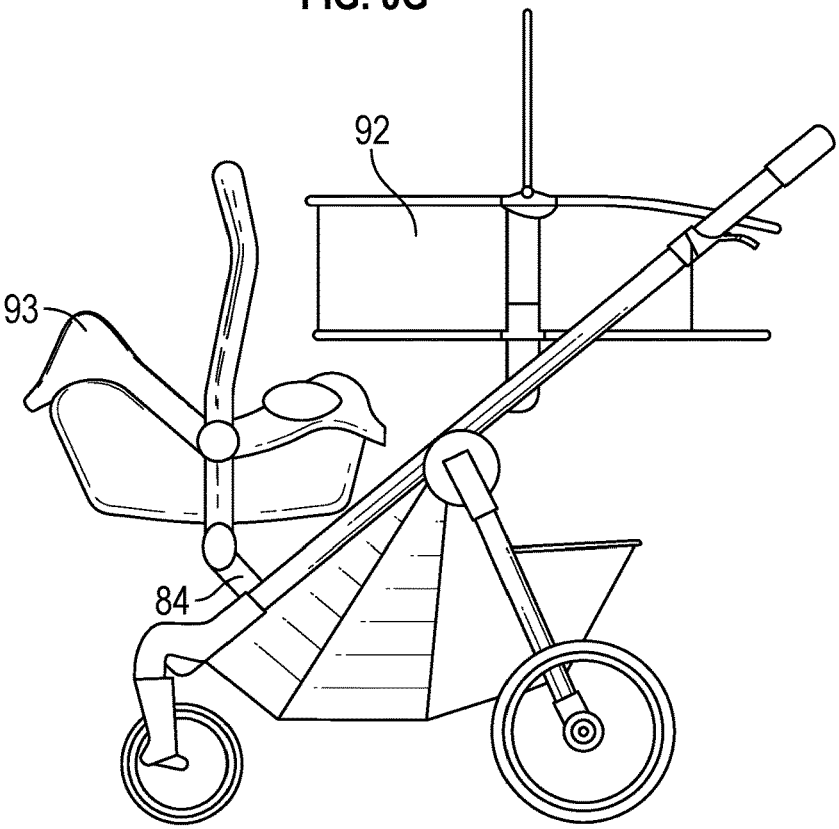

FIG. 8H

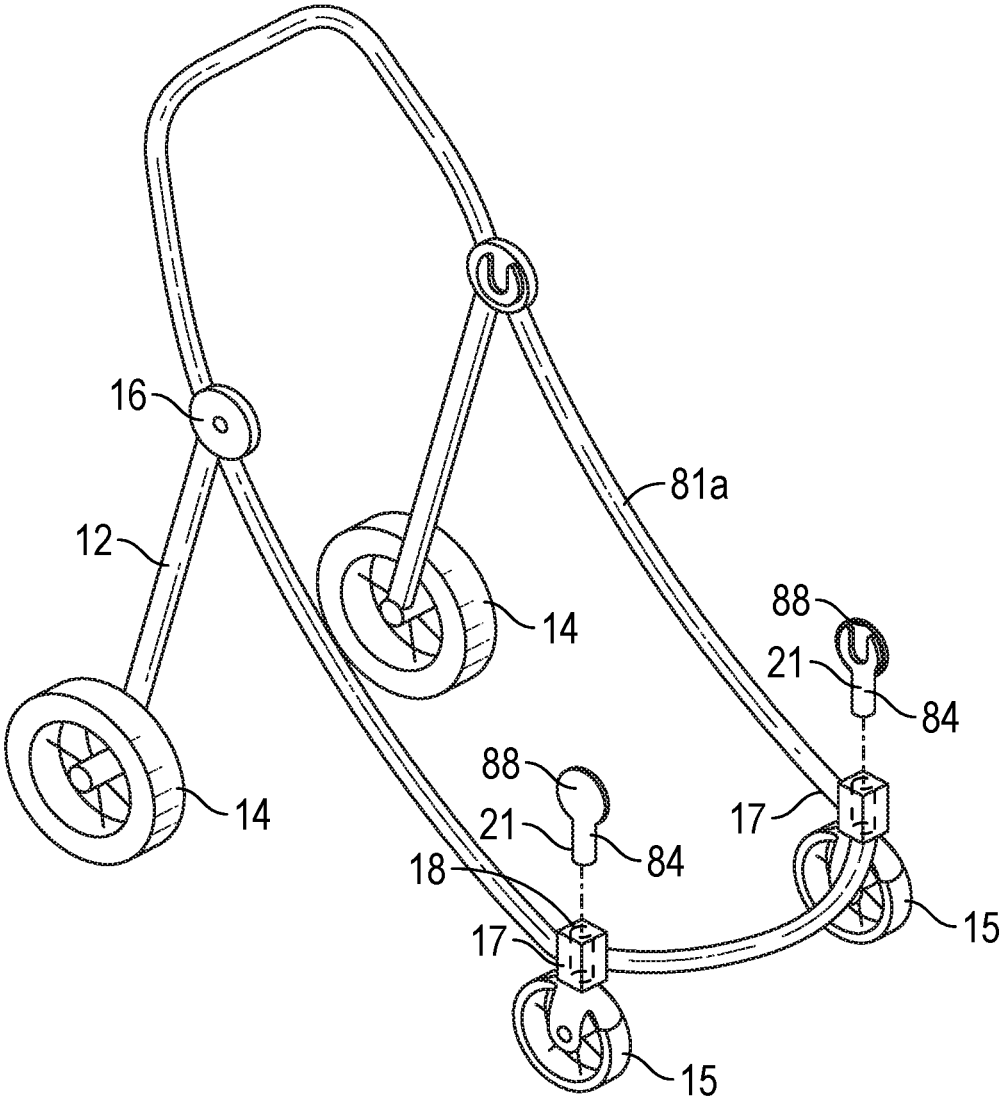

FIG. 9

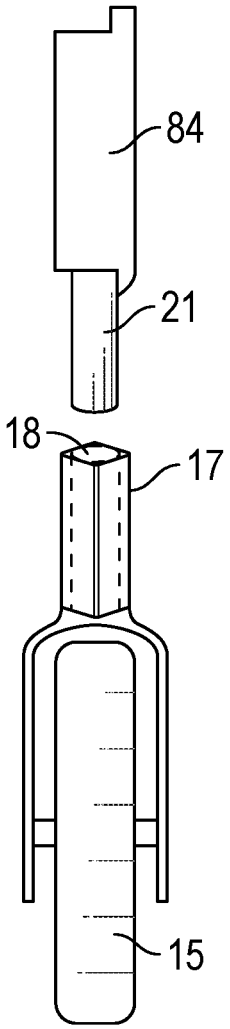

FIG. 10

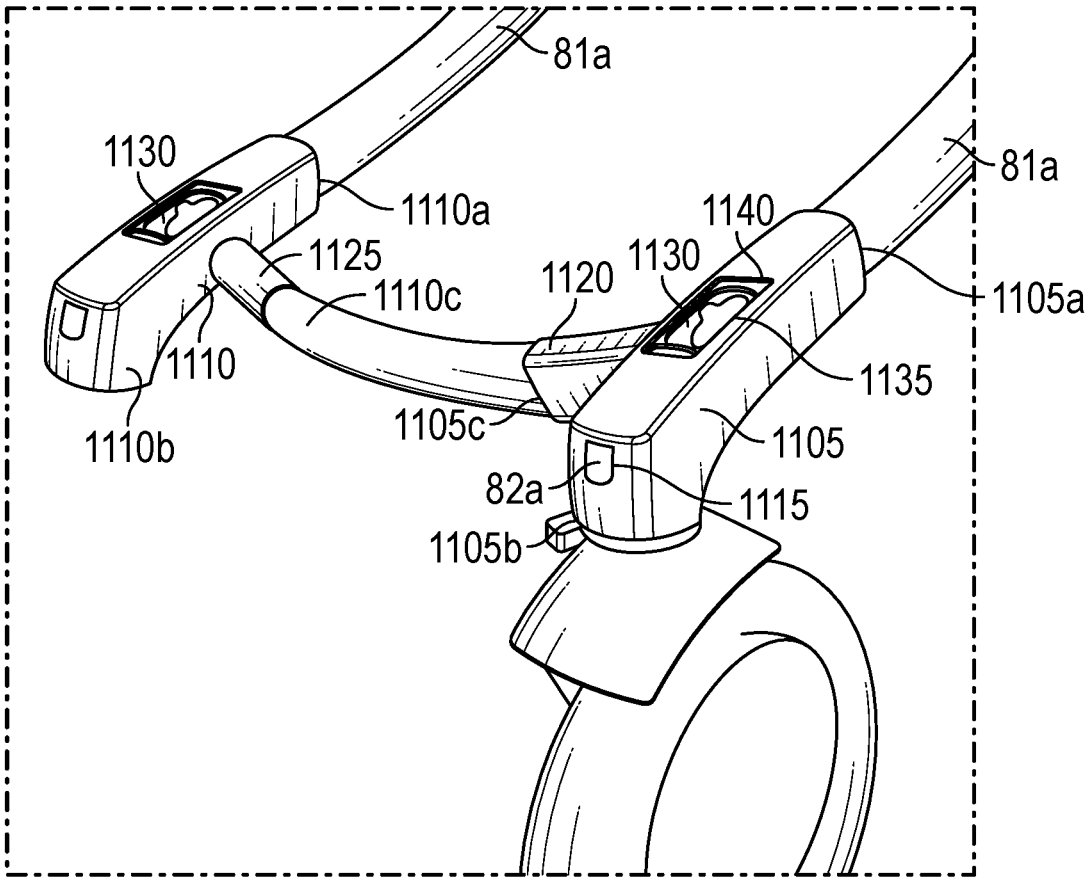
81a
1130
1110a
1125
1110c
1120
1130
1140
81a
1105a
1110
1135
1110b
1105c
1105
82a
1115
1105b

FIG. 11

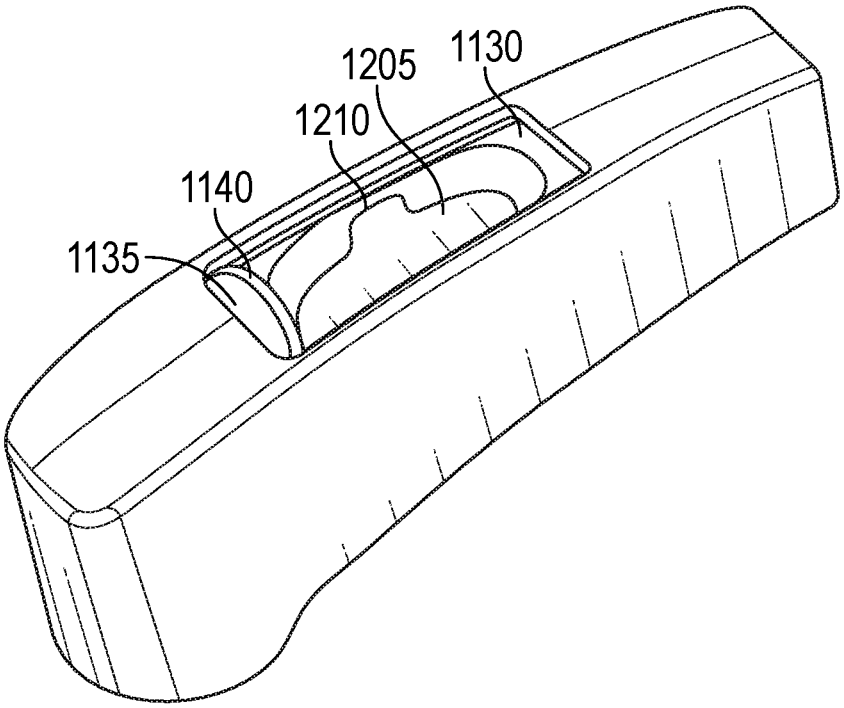

FIG. 12

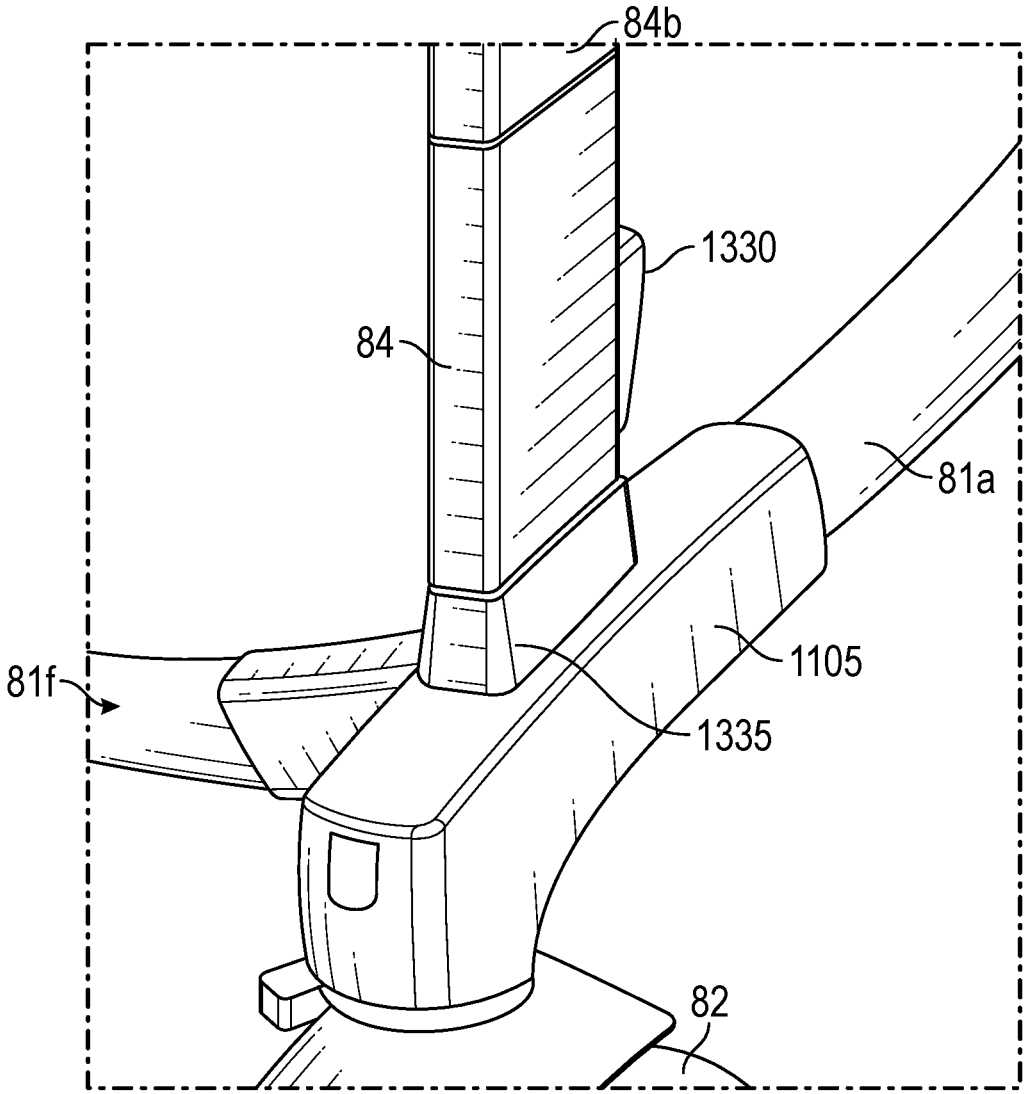

FIG. 13A

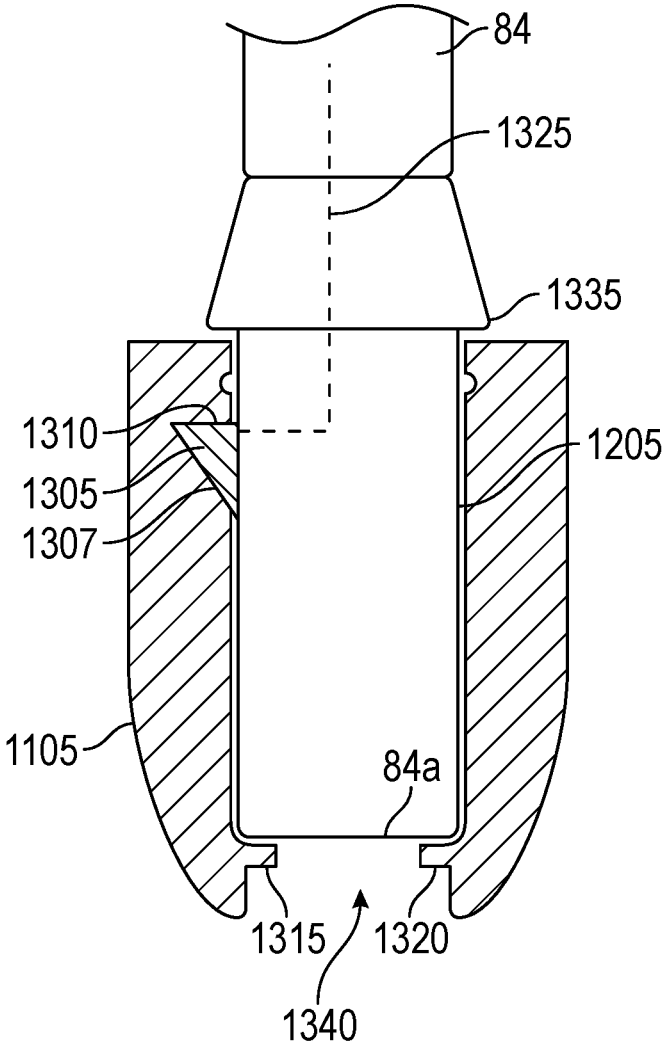

FIG. 13B

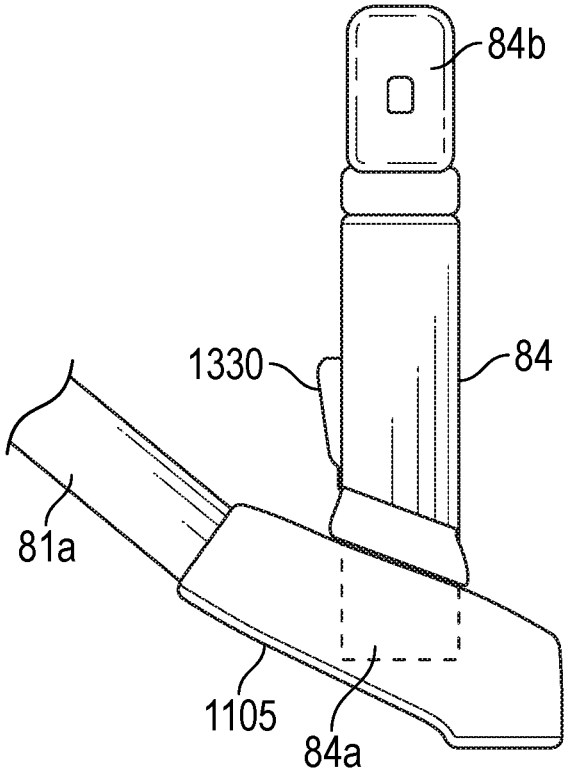

FIG. 13C

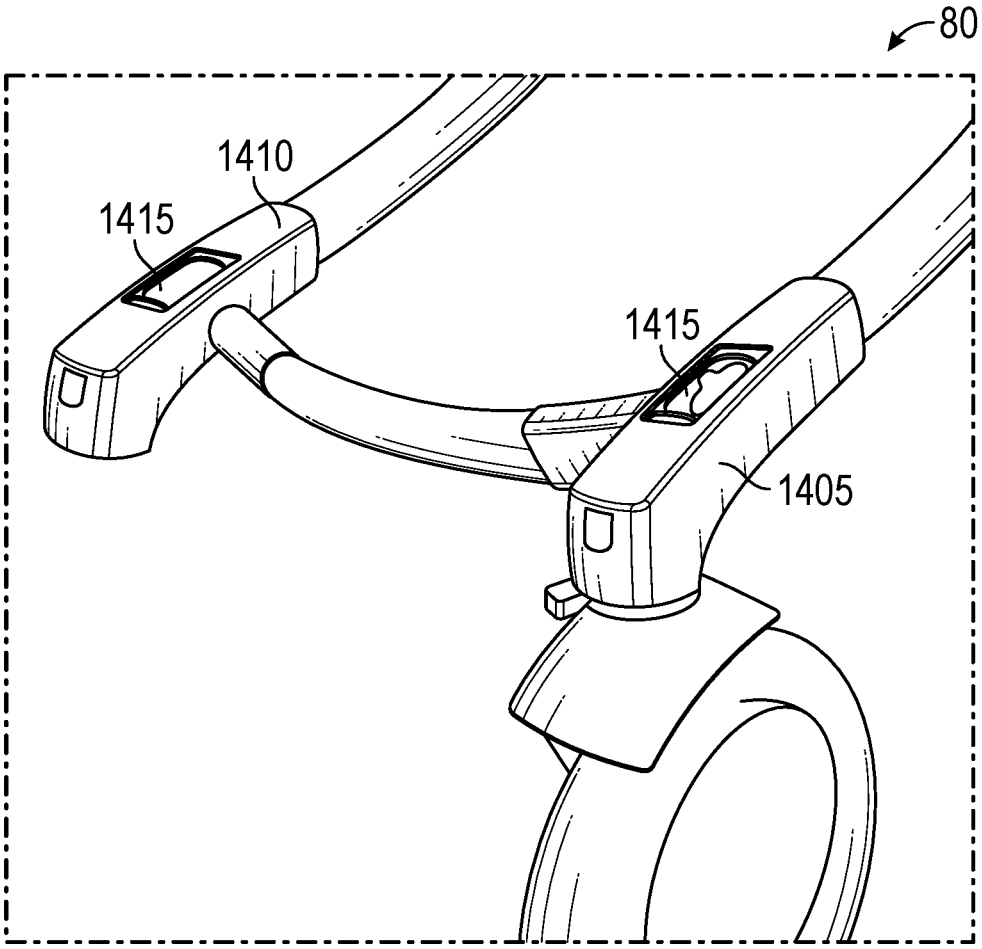

FIG. 14A

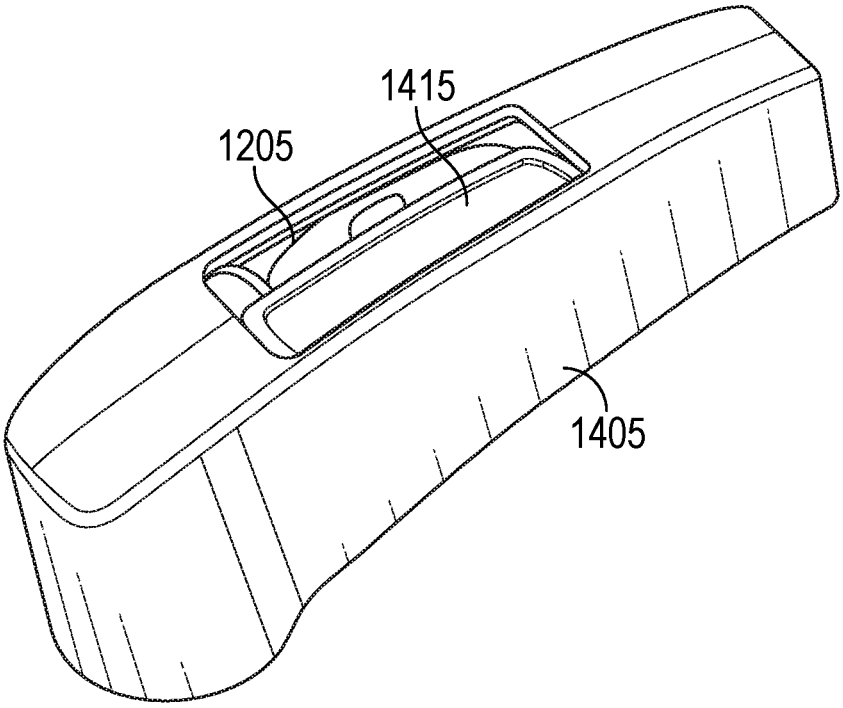

FIG. 14B

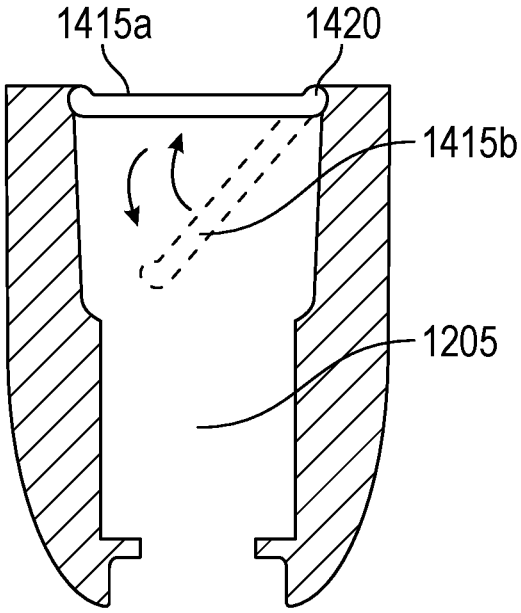

FIG. 14C

REMOVABLE SEAT ATTACHMENT FOR A STROLLER

CROSS-REFERENCE TO RELATED APPLICATIONS

This application is a continuation of U.S. patent Application Ser. No. 16/903,292, filed Jun. 16, 2020, which is a continuation of U.S. patent application Ser. No. 15/912,901, filed Mar. 6, 2018 and issued as U.S. Pat. No. 10,730,543, which is a continuation of U.S. patent application Ser. No. 15/225,326, filed Aug. 1, 2016 and issued as U.S. Pat. No. 9,944,305, which both (i) claims the benefit of U.S. application Ser. No. 62/311,224, filed Mar. 21, 2016, and (ii) is also a continuation-in-part of U.S. patent application Ser. No. 14/597,420, filed Jan. 15, 2015 and issued as U.S. Pat. No. 9,403,550, which is a continuation of U.S. patent application Ser. No. 14/261,558, filed on Apr. 25, 2014 and issued as U.S. Pat. No. 8,955,869, which is a continuation of U.S. patent application Ser. No. 12/631,375, filed Dec. 4, 2009 and issued as U.S. Pat. No. 8,474,228, which claims the benefit of U.S. application Ser. No. 61/119,920, filed Dec. 4, 2008, the contents of which are all incorporated herein by reference.

TECHNICAL FIELD

Embodiments disclosed herein are generally related to children's stroller systems and more particularly to apparatuses and methods for a removable seat attachment for a stroller that is capable of supporting a seat including, but not limited to, a stroller seat, a baby seat, a bassinet, a pram, a car seat, or a baby carrier.

BACKGROUND

Parents or guardians with multiple young children may have difficulty transporting their children from place to place. Children are slow, easily distracted and, therefore, may lag behind. In response, many parents and/or guardians have purchased double seat strollers allowing the parent or guardian to push two children simultaneously and thus allow them to more efficiently run errands, take walks, or jog. As such, a double seat stroller allows the parent or guardian with multiple young children more freedom than they would have with only a single seat stroller.

However, permanently fixed double seat strollers also have certain disadvantages. Double seat strollers are substantially larger (wider and/or longer) than single seat strollers and are, therefore, more difficult to maneuver through doorways and down aisles in stores. While, the benefits of being able to accommodate two children at one time in a double seat stroller typically offset these disadvantages, when the parent or guardian has only one child with them, the benefits of the double seat stroller are not realized but the disadvantages still exist.

Stroller manufacturers have attempted to solve this problem by providing an adjustable stroller that can be modified from having a single seat to having two seats by providing attachments that provide a second seat for the second child that hangs under and slightly behind the seat of the single seat stroller. In other embodiments, the second seat can be attached to a seat attachment placed further forward in the stroller. The current attachment mechanisms can suffer from several drawbacks. These drawbacks include being permanently affixed to the stroller frame and taking up unnecessary space or creating a safety hazard for children not in the stroller when the second seat is not attached to the stroller. In addition, the covers for the seat attachments, for covering a portion of the seat attachment mechanism when not in use, are detachable and can be easily lost when the seat attachment is in use.

BRIEF DESCRIPTION OF THE EXAMPLE DRAWINGS

For a more complete understanding of the present disclosure and certain features thereof, reference is now made to the following description, in conjunction with the accompanying figures briefly described as follows:

FIG. **1** presents a side elevation view of a single stroller apparatus according to one example embodiment of the disclosure.

FIG. **2** presents a partial side elevation view of a seat attachment to convert a single stroller into a double stroller according to one example embodiment of the disclosure.

FIG. **3** presents a side elevation view of a combination of the single stroller of FIG. **1** attached to the seat attachment of FIG. **2** according to one example embodiment of the disclosure.

FIG. **4** presents a perspective view of a seat attachment capable of supporting a car seat on an attachment of FIG. **2** according to one example embodiment of the disclosure.

FIG. **5** presents a side elevation view of a combination of the single stroller of FIG. **1** attached to an attachment in the form of a tricycle-like riding device according to one example embodiment of the disclosure.

FIG. **6**A presents a view of an accessory attachment for supporting an accessory on stroller, while FIG. **6**B presents a view of a bag or purse for attaching to the accessory attachment of FIG. **6**A according to one example embodiment of the disclosure.

FIG. **7** presents a perspective view of an attachment for supporting a seat comprising one wheel according to one example embodiment of the disclosure.

FIGS. **8**A-H present multiple views of a stroller apparatus capable of being converted from a single seat stroller to a double seat stroller through the use of removable seat attachment adapters according to one example embodiment of the disclosure.

FIG. **9** presents a perspective view of one version of a stroller with left and right attachment frame members for attaching a second seat according to one example embodiment of the disclosure.

FIG. **10** presents a front elevation view of an attachment frame member according to one example embodiment of the disclosure.

FIG. **11** is a partial perspective view of the stroller showing the seat attachment housing according to one example embodiment of the disclosure.

FIG. **12** is a partial perspective view of the seat attachment Musing according to one example embodiment of the disclosure.

FIGS. **13**A-C are partial perspective views of the removable seat attachment adapter removably coupled to the seat attachment housing according to one example embodiment of the disclosure.

FIGS. **14**A-C are partial perspective views of an alternative embodiment of the seat attachment housing according to another example embodiment of the disclosure.

DETAILED DESCRIPTION OF THE EXAMPLE EMBODIMENTS

Example embodiments of the invention now will be described more fully hereinafter with reference to the

accompanying drawings, in which example embodiments are shown. The concept disclosed herein may, however, be embodied in many different forms and should not be construed as limited to the exemplary embodiments set forth herein; rather, these embodiments are provided so that this disclosure will be thorough and complete, and will fully convey the scope of the invention to those skilled in the art. Like numbers refer to like, but not necessarily the same, elements throughout.

The example embodiments described herein and shown in the figures is described with reference to an infant or child's stroller that can be configured to adjust from a single seat stroller to a multi-seat stroller. While the example embodiments will generally be described with reference to adding or removing seats from the stroller, the reference to seats is for example purposes only, as the seat or portion that can be added or removed from the stroller can include, but is not limited to, a stroller seat, a baby seat, a bassinet, a pram, a car seat, or a baby carrier. Each of the stroller seat, baby seat, bassinet, pram, car seat, and/or baby carrier should individually be read as an alternative embodiment to the removable/added infant or child's stroller seat described below.

Certain dimensions and features of the example adjustable stroller are described herein using the term "approximately." As used herein, the term "approximately" indicates that each of the described dimensions is not a strict boundary or parameter and does not exclude functionally similar variations therefrom. Unless context or the description indicates otherwise, the use of the term "approximately" in connection with a numerical parameter indicates that the numerical parameter includes variations that, using mathematical and industrial principles accepted in the art (e.g., rounding, measurement or other systematic errors, manufacturing tolerances, etc.), would not vary the least significant digit.

In addition, certain relationships between dimensions of the adjustable stroller and between features of the adjustable stroller are described herein using the term "substantially." As used herein, the terms "substantially" and "substantially equal" indicates that the equal relationship is not a strict relationship and does not exclude functionally similar variations therefrom. Unless context or the description indicates otherwise, the use of the term "substantially" or "substantially equal" in connection with two or more described dimensions indicates that the equal relationship between the dimensions includes variations that, using mathematical and industrial principles accepted in the art (e.g., rounding, measurement or other systematic errors, manufacturing tolerances, etc.), would not vary the least significant digit of the dimensions. As used herein, the term "substantially constant" indicates that the constant relationship is not a strict relationship and does not exclude functionally similar variations therefrom. As used herein, the term "substantially parallel" indicates that the parallel relationship is not a strict relationship and does not exclude functionally similar variations therefrom.

As discussed above, parents or guardians may find themselves in a situation wherein it is more convenient to transport two children in a stroller, but at the same time find it inconvenient to have both a single stroller and double stroller. Embodiments of the seat attachment solve this problem. In one aspect, an embodiment of the seat attachment for a stroller is capable of converting a single stroller into a double stroller. The seat attachment may support a seat such as, but not limited to, a stroller seat, a baby seat, a bassinet, a pram, a baby carrier, or a car seat, for example. Therefore, the parent or guardian does not require both a single stroller and a double stroller. A stroller configured to receive a seat attachment for converting a single stroller into a double stroller provides convenience to the user. The single stroller may be connected to a double stroller by attaching the seat attachment to the single stroller and then attaching the second seat. As such, an embodiment of the seat attachment for converting a single stroller into a double stroller can include at least one connector portion capable of connecting to a stroller frame and a seat support element capable of supporting a seat.

FIG. **1** presents a side elevation view of a single stroller apparatus **10** according to one example embodiment of the disclosure. Referring to FIG. **1**, it shows only one side of the single stroller **10**, however, most components include a complementary component on the other side of the single stroller but are not shown in FIG. **1**. The example single stroller **10** includes a frame **12** that supports a seat **13**. The frame **12** may optionally include at least one, and in certain embodiments preferably two, folding mechanisms **16** that allow the stroller **10** to be folded to a more convenient size for storing or transporting the stroller **10**.

In the example embodiment of FIG. **1**, the seat **13** is shown as a typical stroller seat. However, other types of seats may be used in a single stroller. The seat **13** may be permanently affixed to the frame **12** or releasably connected, such that it is capable of being removed and substituted with a different seat. As used herein, "releasably connected" or "releasably attached" means the connection is not a permanent connection and that the connection is capable of being connected and disconnected by the user of the stroller **10** without requiring special tools or special skills. Releasable connections include, but are not limited to, buttons, snaps, friction fittings, interference fits, threaded connections, locking tabs, keyed connections, other fasteners, or the like. The frame **12** is supported on a pair of back wheels **14** and a pair of front wheels **15**. In this example embodiment, the back wheels **14** are fixed and do not swivel or pivot on the frame **12** while the pair of front wheels **15** pivot to make turning the single stroller **10** easier and more convenient. Though, pivoting wheels may be preferred in certain strollers, strollers with fixed non-pivoting wheels are also common and considered as an option as part of this disclosure. In certain example embodiments, the single stroller **10** does not require pairs of front **15** or rear **14** wheels and either the front pair of wheels **15** or the back pair of wheels **14** may be substituted with a single wheel. In certain example embodiments, the single stroller **10**, including umbrella strollers, jogging strollers, all-terrain strollers, as well as other strollers may only include one front wheel **15**.

The example single stroller **10** may also include one or more seat attachments that are capable of converting any style of single stroller to a double stroller, including strollers with one or two front wheels. In one example embodiment, the stroller **10** can include two attachment ions **17**. In one example, the attachment portions **17** can be positioned on or near the front of the stroller **10** to allow the seat attachment and the seat to be connected to the front portion of the stroller **10**. The attachment portions **17** can allow a seat attachment such as the seat attachment for converting the single stroller **10** to a double stroller as shown in FIG. **3**, to be connected to the stroller. While only one seat attachment is shown in FIG. **3**, the stroller **10** could typically include two seat attachments as shown in FIG. **3** or one seat attachment that can include two seat support elements. In certain example embodiments, the stroller **10** can include a left side and a. right side attachment portion **17**. The seat attachment for the stroller **10** can further include corresponding connector portions capable of connecting to the

stroller frame at the attachment portions **17**. Though the seat attachment for the stroller is described in relation to a single stroller, the attachment may similarly be attached to a double stroller. As such, example embodiments of the seat attachment may therefore be used to convert a double stroller into a triple stroller, if desired.

FIG. **2** presents a partial side elevation view of a seat attachment to convert a single stroller into a double stroller according to one example embodiment of the disclosure. Now referring to FIGS. **1** and **2**, the example seat attachment **20** is shown in an unlocked and folded configuration. The seat attachment **20** includes a one or more connector portions **21** capable of connecting to the attachment frame members **24**, two seat attachment elements **22** capable of supporting a seat; and a wheel **23**. In this example embodiment, the connector portions **21** are connected to the rear of the seat attachment **20** allowing the seat attachment **20** to be connected to the front of a stroller, such as stroller **10** shown in FIG. **1**. In other example embodiments, the seat attachment **20** may include more than one wheel **23**, one connector portion **21**, one seat support element, or combinations of these elements. In example embodiments of the stroller with one wheel, the attachment frame member may be on the forks of the front wheel, for example.

The seat attachment **20** can include a wheel support frame **26** connecting the wheel **23** to the attachment frame member **24** of the attachment **20**. Each attachment frame member **24** has a first and a second end. The first end is capable of connecting to a stroller frame and the second end can be connected to the seat support element **22**. As shown in FIG. **2**, the seat attachment **20** can include a wheel support frame **26** that is pivotally connected to two attachment frame members **24**. The wheel support frame **26** or the attachment frame **24** may span the width of the stroller between the two attachment portions **17**. The pivotal connection **27** allows the seat attachment **20** to be folded and conveniently stored or transported but is not necessary for all example embodiments of the disclosure. The pivotal connection **27** can be optional and provide more convenience, however, other example embodiments of the seat attachment **20** can include a releasably connected wheel support frame or a rigid frame that may be incorporated to produce a seat attachment that has greater strength for use in situations where a stronger seat attachment may be desired, such as with all-terrain or jogging strollers, for example. The wheel support frame **26** may be connected at any point on the attachment frame **24**. In certain example embodiments the wheel support frame **26** is connected to the attachment frame **24** near the connector portion **21** or near the middle of the attachment frame **24**.

In certain example embodiments, the seat attachment without a wheel may include connector portion **21** or attachment frame member **24**, and seat attachment member **22**, for example. In this example embodiment, there may be no need for the pivotal connection **27**, wheel support frame **26**, sliding connector **25**, or wheel **23**.

The seat attachment **20** can also include a folding mechanism that includes a sliding connector **25** connected to a first end of a strut **28**. A second end of the strut **28** can be pivotally connected to wheel support frame **26**. In such an embodiment, the sliding connector **25** may be moved between a first position and a second position on the attachment frame member **24**. As the sliding connector **25** is moved, the strut **28** pushes the wheel support frame **26** from an in-use position to a storage position. The storage position is more compact as shown in FIG. **2**. In addition, certain example embodiments of the seat attachment **20** can also include a locking mechanism **29** that is capable of securing the seat attachment **20** to a stroller, such as stroller **10** shown in FIG. **1**. The locking mechanism **29** can be engaged by moving the sliding connector **25** to the in-use position, in which the wheel support frame **26** and wheel **23** are extended. In certain example embodiments, the wheel **23** of the seat attachment **20** is pivotally connected to the connector portion **21** and when the wheel **23** is in the in-use position the releasable connection is locked and when the wheel **23** is moved to the storage position, the releasable connection is unlocked allowing the seat attachment **20** to be removed from stroller **10**. The seat attachment **20** may be stored and the stroller **10** may be conveniently used as a single stroller. As designed, the seat attachment **20** may be reconnected to the stroller **10** for use as a double stroller when needed. The seat attachment portion may be secured into position on the stroller frame and a locking mechanism may be used with an embodiment with or without the wheel. Either the seat attachment or the stroller frame can include a locking mechanism for securing the stroller and seat attachment together. The locking mechanism may be any mechanism capable of securing the components together during use and may be a friction locking device, threaded connection, peg in a hole, or an interference locking device such as a pin in a hole, for example. As shown in the example embodiment of FIG. **2**, the locking mechanism **29** pivots with wheel support frame **26** as the seat attachment **20** is moved from an unfolded position to a folded position. The locking mechanism **29** may slide into a hole or notch in the attachment frame member **24** of the stroller **10** shown in FIG. **1**. As such, the seat attachment **20** may be attached to the stroller **10** by positioning the attachment (connector) portion **21** of the seat attachment **20** in the slot **18** of the attachment portion **17** of the stroller **10**. The sliding connector **25** may be moved to the in-use position, the wheel support frame is moved, and the locking mechanism **29** is positioned into the locking slot **19** of the stroller **10**.

In certain example embodiments, the connector portion **21** of the seat attachment **20** has a cylindrical or substantially cylindrical shape. The connector portion **21** may be inserted into a cylindrical or substantially cylindrical slot **18** of the attachment portion **17** of the stroller **10** of FIG. **1** to secure the seat attachment and convert the single stroller into a double stroller, as shown in FIG. **3**. In other example embodiments, the seat attachment **20** may include any type of connector portion having any geometric or non-geometric shape. The connector portion **21** may be of a solid or tubular construction and may be any cross-sectional shape including, but not limited to, circular, polygonal, square, rectangular, and triangular, for example. Other attachment mechanisms may be utilized to connect the seat attachment to the stroller **10** such as, but not limited to, a U-shaped bracket, a U-bolt, a pipe clamp, O-shaped bracket, screw, bolt, or other clamping or attachment means. The attachment frame member **24** of the stroller **10** can have a complimentary and/or cooperating shape that allows the connector portion **21** to be secured to the attachment portion of the stroller.

FIG. **3** presents a side elevation view of a combination of the single stroller **10** of FIG. **1** attached to the seat attachment **20** of FIG. **2** according to one example embodiment of the disclosure. Referring to FIG. **3**, the seat attachment **20** removably coupled to the single stroller **10** to form a double stroller. The double stroller configuration is shown with two stroller seats **13** in an inline configuration, though the other configurations, such as a stroller seat and a bassinet or a pram may also be supported on the double stroller. Further, the seat support element **22** of the seat attachment **20** may be

capable of supporting the front stroller seat **13** in either a forward-facing or backward-facing position.

The example embodiment of the stroller **10** in FIG. **3** is shown only as an example of one type of stroller, the frame of the stroller **10** may be any of many possible configurations. Example embodiments of the seat attachment accessory may be configured to be used on any such configuration of a stroller. For example, in another example embodiment, the baby stroller may not include two front wheels, may not include a folding mechanism or may include only one folding mechanism. In addition, the baby stroller may include additional features not included in baby stroller **10**. For example, the stroller may optionally include fixed front wheels, an entirely different frame configuration, or a storage basket underneath the seat of the stroller.

The seat support member may be any configuration capable of supporting the seat on the seat attachment **20**. FIG. **4** presents another example embodiment of a seat support member **40** for use with a car seat or other baby seat according to one example embodiment of the disclosure. Now referring to FIG. **4**, the seat support member **40** can include a main support **41**. The main support **41** can include a cradle for supporting a central portion of the seat. Another portion of the seat may rest against support bar **42**. In this example, the support bar **42** may be adjusted to accommodate seats of different shapes and sizes. The support bar **42** may be slid within the aperture **43** and locked in place when the support bar **42** is in the desired position to support a certain seat. The seat is, therefore, supported on two main supports **41** and the support bar **42**. The seat may be further secured in the seat attachment member **40** by wrapping belts **44** and **45** around the seat and locking the belts in this position with a buckle or other securing means.

FIG. **5** presents a side elevation view of a combination **50** of the single stroller **10** of FIG. **1** attached to an attachment in the form of a tricycle-like riding device according to one example embodiment of the disclosure. Referring to FIG. **5**, the combination **50** includes the stroller **10** and the seat attachment **51**. In one example, the seat attachment **51** is a tricycle-like attachment that includes a connector portion **52**, a frame **53** with a seat support element **56**, a seat **57**, and a wheel **55**. The tricycle-like attachment may be attached to stroller **10** to allow one child to be pushed in the stroller **10** and one child to ride the seat attachment **51**. The seat attachment **51** may be other shapes also such as cars, trucks, or animal shapes, for example.

In certain example embodiments, the stroller **10** can include an additional accessory attachment portion **58**. The accessory attachment portion **58** attaches to a frame member of the stroller **10**. An embodiment of the accessory attachment portion **58** is shown on FIG. **6**A. This embodiment is particularly useful for attaching a bag or purse **64**, as shown in FIG. **6**B, to the stroller **10**.

When using a stroller, parents or guardians typically carry other items, such as purses, grocery bags, cell phones, diapers, cleaning wipes, or other personal or baby related items. Some strollers have bottom storage baskets for placing such items. However, these storage baskets can be inconvenient to access or some light weight strollers do not include such storage baskets. Therefore, users of the stroller may hang purses or shopping bags on the handle of the stroller. This is convenient in that the bag is easy to access, but the weight of the bag on the handle may cause the stroller to be unbalanced and increase the tendency of the stroller to topple backwards. A heavy bag hung from the handle of a stroller may cause the stroller to tip backwards even with a child in the seat, The problem is worse if the stroller is facing uphill, on uneven terrain, being pushed up a curb, or occupied by a small child. The accessory attachment **58** may be attached to the frame of the stroller **10** by any of the clamping or attachment methods described above, for example. Preferably, the accessory attachment **58** is attached near the center of gravity of the stroller **10** to avoid creating an unbalanced condition of the stroller **10**. As shown in FIG. **6**A, the accessory attachment **58** is connected to stroller frame **12** of stroller **10** near the folding mechanism. Certain example embodiments of the accessory attachment **58** include a first end **61** for connecting to a stroller frame and a distal second end **62** for releasably connecting to the accessory **64**. The first end **61** can include an aperture **64** that may be connected to frame **12** of the stroller **10**. In certain example embodiments, the aperture **64** is on an angle, such that when the axis of the accessory attachment portion **58** is horizontal or substantially horizontal. The accessory attachment **58** may, optionally, include a rib **63** for securing the accessory **64** to the accessory attachment **58**. The rib **63** may be replaced with any other locking element or securing means including a friction fitting, a screwed fitting, or interference fitting, for example.

One example of an accessory **64** for attaching to an accessory attachment **58** is shown in FIG. **6**B. The accessory **64** in this example is a bag or purse. The accessory **64** can include an attachment portion **65** that is capable of being secured to the attachment portion **62** on the accessory attachment **58**. The accessory **64** may be secured on stroller **10** by securing attachment portion **65** to attachment portion **62**. The attachment portion **65** can slide over the cylindrical attachment portion **62** of accessory attachment **58**. The attachment portion **65** may include an interior annular recess that receives the rib **63** securing the accessory **58** to the stroller **10**. The accessory **64** is thus removably coupled to the stroller **10** in a center portion of the stroller as viewed from the side. Therefore, the bag or purse **64** is conveniently secured to stroller **10** while not contributing to an unbalanced condition of the stroller **10**.

FIG. **7** presents a perspective view of an attachment **70** for supporting a seat comprising one wheel **73** according to one example embodiment of the disclosure. Referring now to FIG. **7**, the example seat attachment **70** can include two seat attachment members **71**, two connector portions **72**, and a wheel **73**. The two seat attachment members **71** and the wheel **73** can be disposed or otherwise positioned in a triangular relationship, In certain example embodiments, the wheel **73** provides additional stability to a stroller **10** connected to the seat attachment **70** if a heavier child is placed in a seat attached to the seat attachment members **71**.

FIGS. **8**A-H present multiple views of a stroller apparatus capable of being converted from a single seat stroller to a double seat stroller through the use of removable seat attachment adapters, according to another example embodiment of the disclosure. Referring now to FIGS. **8**A-H, the example stroller apparatus **80** can include a stroller frame **81** capable of supporting one or more stroller seats **85**, **86**. In one example embodiment, the stroller frame **81** can be made of one or more pieces fixedly coupled and/or removably coupled to one another. The stroller frame **81** can include portions that are hollow tubing and other portions that are solid core tubing and can be made from metal, plastic, or other materials known in the art.

In one example embodiment, the stroller frame **81** can include a pair of front wheel support frames **81***a* (only the left front wheel support frame is shown), a pair of back wheel support frames **81***b* (only the left back wheel support frame is shown), a pair of upper tube support frames **81***c*

(only the left upper tube support frame is shown), a handle portion **81***d* having a first end coupled to the left upper tube support frame **81***c* and a distal second end coupled to the right upper tube support frame **81***c,* and foot rest support frame **81***f* having a first end coupled to the left front wheel support frame **81***a* (either directly or via the first seat attachment housing **1105** discussed below in FIG. **11**) and a distal second end coupled to the right front wheel support frame **81***a* (either directly of via the second seat attachment housing **1110** discussed below in FIG. **11**). In certain example embodiments, each front wheel support frame **81***a* can be fixedly coupled or rotatably coupled to its corresponding upper tube support frame **81***c*. Further, in certain example embodiments, the left upper tube support frame **81***c,* handle **81***d,* and right upper tube support frame **81***c* can be made from a single unitary piece of material, such as a single piece of bent, hollow-core metal or plastic tubing. Alternatively, each of the left upper tube support frame **81***c,* handle **81***d,* and right upper tube support frame **81***c* can be separate pieces of the same or different material that are coupled to one another.

The exemplary stroller frame **81** can also include a pair of folding mechanisms **81***e* (only the left folding mechanism is shown). In one example, each folding mechanism **81***e* can be coupled, either directly or indirectly to the corresponding front wheel support frame **81***a,* back wheel support frame **81***b,* and upper tube support frame **81***c* on the corresponding side (left and right) of the stroller **80**. In certain example embodiments, one or more of the corresponding front wheel support frame **81***a,* back wheel support frame **81***b,* and upper tube support frame **81***c* are rotatably coupled and rotatably adjustable about one or more axes defined through the folding mechanism **81***e*. As such, in certain example embodiments, the folding mechanism **81***e* allows the stroller **80** to be folded into a more compact size for storing or transportation. FIG. **8**B shows the stroller **10** in a folded configuration.

The example stroller **80** can also include at least one front wheel **82** coupled directly or indirectly (e.g., via one of the seat attachment housings **1105**, **1110**, as shown in FIG. **11**) to the stroller frame **81**. FIG. **8**B presents an example embodiment wherein the stroller **80** can include two front wheels **82**, one front wheel **82** being coupled to the stroller **80** adjacent the left front wheel support frame **81***a* and the second front wheel **82** being coupled to the stroller **80** adjacent the right front wheel support frame **81***a*. The example stroller **80** can also include at least one rear wheel **83** coupled directly or indirectly to the stroller frame **81** (e.g., a corresponding back wheel support frame **81***b*). Figure SB presents an example embodiment wherein the stroller **80** can include two back wheels **83**, one back wheel **83** being coupled to the left back wheel support frame **81***b* and the second back wheel **83** coupled to the right back wheel support frame **81***b*.

The stroller **80** can also include a first stroller seat **86** either fixedly or removably coupled to the stroller frame **81**. For example, the first stroller seat **86** can include a left connector on the left side of the first stroller seat **86** and a right connector on the right side of the first stroller seat **86** to removably couple and decouple the first stroller seat from the stroller frame **81**. In one example, each of the left connector and right connector can be cavities in the first stroller seat **86** and can be configured to receive at least a portion of a corresponding seat attachment adapter (e.g., a bayonet connector) therein. In another example embodiment, the left connector and the right connector can each be tabs or slots that are configured to be coupled to corresponding slots or tabs along the stroller frame **81**.

The stroller **80** can also include a removable seat attachment adapter **84** that is removably coupled to the frame **81** such that the seat attachment adapter **84** can be decoupled from the frame **81** and stored when a second stroller seat is not being used with the stroller **80**. In one example embodiment, each removable seat attachment adapters can be coupled to the frame by coupling the adapter **84** into a seat attachment housing disposed along the frame **81**. In one example, the seat attachment housing (such as that described in FIGS. **11**-**14**C below) can be integrally formed with all or a portion of the stroller frame (e.g., integrally formed with front wheel support frame **81***a*). Alternatively, the seat attachment housing can be a separate apparatus that is coupled to the frame **81** or incorporated into the frame **81** by coupling multiple pieces of the frame **81** together. The frame **81** and each seat attachment housing can be made from the same or different materials, including, metals and plastics.

Though it cannot be seen in the side view of FIG. **8**A, a typical embodiment of the stroller **80** will include at least two removable seat attachment adapters **84** (at least one along each left and right side of the stroller **80** along the stroller frame **81**). For example, at least one removable seat attachment adapter can support each lateral side of the second stroller seat **85**. In certain example embodiments, each of the removable seat attachment adapters **84** may be made up of one piece or multiple parts. The removable seat attachment adapters **84** may be of any design capable of securely supporting a seat on the stroller. In one example, the removable seat attachment adapter **84** is configured to have a first end that is removably coupled to the frame **81** and/or seat attachment housing and a distal second end that is configured to be removably coupled to a second stroller seat **85**. The removable seat attachment adapter **84** is designed to be capable of supporting the second stroller seat **85** in front of the first stroller seat **86**. The stroller **80** may also include a storage basket **87**.

In certain examples, each of the removable seat attachment adapters **84** removably couples to the second stroller seat **85** at a vertical height that is substantially below the vertical height that the first stroller seat **86** attaches to the stroller frame **81**, thereby positioning the second stroller seat **85** at a vertical position that is substantially below the vertical position of the first stroller seat **86** when both the first stroller seat **86** and the second stroller seat **85** are coupled to the stroller **80**. The difference in vertical positioning of the second stroller seat **85** as compared to the first stroller seat **86** provides improved access to the first stroller seat **86** from the front of the stroller **10** when both stroller seats **85**, **86** are coupled to the stroller **80**. Further, in certain example embodiments, the first stroller seat **85** can be positioned substantially over the front wheels **82** so that the stroller **80** remains stable. For example, the second stroller seat **85** can be located substantially over the front wheels **82** and the first stroller seat **86** can be located substantially over the rear wheels **83**. In addition, the seats **85**, **86** can be positioned such that the center of gravity of the stroller **80** is between the front **82** and rear **83** wheels.

In certain example embodiments, the removable seat attachment adapter **84** is capable of supporting a second stroller seat **85** such that a child in the second stroller seat **85** is substantially above the frame **81** of the stroller **80** that is substantially adjacent to the connection point of the second stroller seat **85**. This positioning of the second stroller seat **85** with respect to the frame **81** provides easier access to the second stroller seat **85**, does not block access to the storage

basket **87** allows more versatile configurations of the seats **85**, **86**, allows more variety of seats **85**, **86** to be attached to the frame **81**, and allows the parent or guardian to more easily monitor and see the child in each stroller seat **85**, **86**.

The example stroller of FIG. **8**A can also include the first stroller seat **86**. In certain example embodiments, the first stroller seat **86** can be located generally closer to the handle portion **81***d* than to the front wheels **82**. The first stroller seat **86** may be fixedly coupled or removably coupled to the frame **81**. In certain example embodiments wherein the first stroller seat **86** is removably coupled to frame **81**, the first stroller seat **86** may be adjustable from a forward-facing configuration to a rearward-facing configuration and vice-versa, as shown, for example, in FIGS. **8**B-**8**C. In addition, the second stroller seat **85**, when coupled to the corresponding removable seat attachment adapters **84**, can be adjustable from a forward-facing configuration to a rearward-facing configuration and vice-versa.

FIGS. **8**C-**8**H present additional examples of combinations for a variety of types of stroller seats that can be removably coupled to the stroller **80**. For example, in FIG. **8**D, the second stroller seat **85** can be replaced by an infant carrier **93** that can be removably coupled to each of the at least two removable seat attachment adapters **84** and the first stroller seat **86** can be coupled to the stroller in a forward-facing position. In another example, as shown in FIG. **8**E, the first stroller seat **86** can be replaced by a child carrier **91** that may be coupled to the frame **81** and positioned in the first seat position and the second stroller seat **85** can be coupled to the stroller **80** by way of the at least two removable seat attachment adapters **84** in a rearward-facing position. In yet another example, as shown in FIG. **8**F, the child carrier **91**, of FIG. **8**E, can be replaced with a pram **92** that is removably coupled to the stroller **80** in the first seat position. In still another example configuration, as shown in FIG. **8**G, two child carriers **91** may be removably coupled to the stroller frame **81**. For example, the front child carrier can be coupled to the stroller by way of each of the at least two removable seat attachment adapters **84**. In another example configuration, one of the child carriers **91** may be replaced with a pram or bassinet **92**, as shown in FIG. **8**H.

In certain example embodiments, the stroller **80** may also include a second set of removable seat attachment adapters **89** removably coupled to the frame **81** (or another pair of seat attachment housings substantially similar to those **1105**, **1110** described below) along the upper tube support frame **81***c*. The second set of removable seat attachment adapters **89** may be substantially the same as or exactly the same as the removable seat attachment adapters **84** described herein and may be coupled to the frame **81** (or corresponding seat attachment housings) in substantially the same manner as the removable seat attachment adapters **84**, as discussed in more detail below. The second set of removable seat attachment adapters **89** can include at least two adapters (at least one along each left and right side of the stroller **80**) for removably coupling and decoupling the first stroller seat **86** or any other form of seat described herein to the stroller frame **81** or corresponding seat attachment housing.

In one example embodiment, as shown in FIGS. **9**-**10**, the stroller **80** can include one or more, and preferably two, seat support elements **84**. The seat support element **84** is connected to and can be removably coupled to the stroller **80** front wheel support frame **81***a*. In certain example embodiments, the seat support element **84** is adjacent to the front wheel support portion **81***a* of frame **81**. Alternatively, the seat support element **84** is simply forward of and positioned at a vertical level lower than the attachment point for the first stroller seat **86** (FIG. **8**A) on the stroller **80**. The seat support element **84** is capable of supporting a second stroller seat **85** in front of the stroller seat **86** (see FIG. **8**A). This provides convenience and versatility to a user of the stroller **80**. Seat support element **84** may be fixedly attached or removably attached to front wheel support portion **81***a*. In certain example embodiments, the front seat **85** may be positioned substantially over the front wheels **15** so the stroller **80** remains stable. Preferably, the seats **85**, **86** should be positioned such that the center of gravity of the stroller **80** is between the front **15** and rear **14** wheels. If not an additional wheel may be placed on the attachment as previously described. The seat support. dement **84** can further include a seat connector **88**. In one example, the seat connector **88** can be disposed along a top end of the seat support element **84**. The example seat connector **88** may be a multipurpose general connector that allows different seats to be interchanged on the seat support element **84**. Any style seat may be configured to connect to the seat connector **88**, such as but not limited to, a stroller seat, a baby seat, a bassinet, a pram, a baby carrier, or a car seat, for example. As shown in FIG. **9**, the seat support element **84** can also include a connector portion **21**. The connector portion **21** is capable of connecting the seat attachment to the frame **81** via the attachment portion **17** and the slot **18**.

In certain example embodiments, the connector portion **21** of the seat attachment **20** has a cylindrical or substantially cylindrical shape. The connector portion **21** may be inserted into a cylindrical or substantially cylindrical slot **18** of the attachment portion **17** of the stroller **80** of FIG. **9**-**10** to secure the seat attachment and convert the single stroller into a double stroller, as shown in FIG. **8**A. The connector portion **21** may be of a solid or tubular construction and may be any cross-sectional shape including, but not limited to, circular, polygonal, square, rectangular, and triangular, for example.

FIG. **11** is a partial perspective view of the stroller **80** showing a seat attachment housing **1105** according to one example embodiment of the disclosure Referring now to FIGS. **8**A and **11**, the example stroller **80** can include a first seat attachment housing **1105** and the second seat attachment housing **1110**. The first seat attachment housing **1105** can include a first end **1105***a* having a cavity for slidably receiving and fixedly or slidably coupling the first end **1105***a* to a first end of the left front wheel support frame **81***a*. For example, the left front wheel support frame **81***a* can have a substantially circular or oval cross-section and the cavity of the first end **1105***a* can have a corresponding circular or oval cross-section to slidably receive a portion of the left front wheel support frame **81***a* into the cavity. In one example, the left front wheel support frame **81***a* can he held in the cavity of the first end **1105***a* by a press fit hold. Alternatively, a spring-loaded button on the left front wheel support frame **81***a* can be positioned into a corresponding opening along one of the sides of the first seat attachment housing **1105**.

The first seat attachment housing **1105** can also include a second end **1105***b* that includes a second cavity for coupling one of the front wheels **82** to the first seat attachment housing **1105**. The wheel **82** may be removably coupled to the second end **1105***b* of the first seat attachment housing **1105** by a press fit hold. Alternatively, a spring-loaded button **82***a* on the front wheel apparatus **82** can be positioned into the cavity of the second end **1105***b* and positioned into a corresponding opening **1115** along one of the sides of the first seat attachment housing **1105**. In one example embodiment, the first seat attachment Musing **1105** can include an attachment arm **1120** extending off of one side of the first

seat attachment housing **1105** in a generally orthogonal direction to the longitudinal axis of the housing **1105**. The attachment arm **1120** can include a free end **1105***c* that includes a cavity for receiving therein and fixedly coupling or slidably coupling the first seat attachment housing **1105** to a first end of the foot rest support frame **81***f*. The foot rest support frame **81***f* may be removably coupled to the free end **1105***c* of the attachment arm **1120** by a press fit hold. Alternatively, a spring-loaded button on the foot rest support frame **81***f* can be positioned into the cavity of the free end **1105***c* and positioned into a corresponding opening along one of the sides of the attachment arm **1120**.

The second seat attachment housing **1110** can include a first end **1110***a* having a cavity slidably receiving and fixedly or slidably coupling the first end **1110***a* to a first end of the right front wheel support frame **81***a*. For example, the right front wheel support frame **81***a* can have a. substantially circular or oval cross-section and the cavity of the first end **1110***a* can have a corresponding circular or oval cross-section to slidably receive a portion of the right front wheel support frame **81***a* into the cavity. In one example, the right front wheel support frame **81***a* can be held in the cavity of the first end **1110***a* by a press fit hold. Alternatively, a spring-loaded button on the right front wheel support frame **81***a* can be positioned into a corresponding opening along one of the sides of the second seat attachment housing **1110**.

The second seat attachment housing **1110** can also include a second end **1110***b* that includes a second cavity for coupling one of the front wheels **82** to the second seat attachment housing **1110**. The wheel **82** may be removably coupled to the second end **1110***b* of the second seat attachment housing **1110** by a press fit hold. Alternatively, a spring-loaded button on the front wheel apparatus **82** can be positioned into the cavity of the second end **1110***b* and positioned into a corresponding opening along one of the sides of the second seat attachment housing **1110**. In one example embodiment, the second seat attachment housing **1110** can include an attachment arm **1125** extending off of one side of the second seat attachment housing **1110** in a generally orthogonal direction to the longitudinal axis of the housing **1110**. The attachment arm **1125** can include a free end **1110***c* that includes a cavity for receiving therein and fixedly coupling or slidably' coupling the second seat attachment housing **1110** to a second distal end of the foot rest support. frame **81***f*. The second end of the foot rest support frame **81***f* may be removably coupled to the free end **1110***c* of the attachment arm **1125** by a press fit hold. Alternatively, a spring-loaded button on the foot rest support frame **81***f* can be positioned into the cavity of the free end **1110***c* and positioned into a corresponding opening along one of the sides of the attachment arm **1125**.

In certain example embodiments, all or a portion of each of the seat attachment housings **1105**, **1110** can be hollowed out with exterior sides. Each of the seat attachment housings **1105**, **1110** can include an opening **1130** positioned along a top side of the respective seat attachment housings **1105**, **1110**. The opening **1130** can provide access to an adapter receiving cavity (see FIG. **12**) for receiving therein at least a portion of the removable seat attachment adapter **84** (see FIG. **13**A). Each seat attachment housing **1105**, **1110** can also include a sliding door **1135**. The sliding door **1135** is configured to be manually adjustable from a closed position to an open position by slidably opening the door **1135** along the top side of the seat attachment housing **1105**, **1110** to provide access to the opening **1130** and adapter receiving cavity when the parent or guardian wants to insert and couple the removable seat attachment adapter **84** to the seat attachment housing **1105**, **1110** and frame **81** in order to couple the second stroller seat **85** to the stroller **80**. In one example, each seat attachment housing **1105**, **1110** can include one or more rails either disposed above or below a top surface of the seat attachment housing **1105**, **1110** that provide a guide way for slidably opening and closing the door **1135**. In one example, the door **1135** can include a tab **1140** extending upward from a top surface of the door **1135** to provide a gripping area to grip the door **1135** and slide it open and closed. For example, a parent or guardian can use a finger against the tab **1140** and apply pressure against the tab **1140** to open the door **1135** from a dosed configuration to an open configuration.

The sliding door **1135** is also configured to be manually adjustable from an open configuration to a closed configuration by slidably dosing the door **1135** along the top side of the seat attachment housing **1105**, **1110** to prevent access to the opening **1130** and adapter receiving cavity when the second stroller seat **85** is not in use. In one example, the parent or guardian can press a finger against the tab **1140** and apply pressure against the tab **1140** to slide the door **1135** from the open configuration to the closed configuration.

FIG. **12** is a partial perspective view of one of the seat attachment housings **1105**, **1110** according to one example embodiment of the disclosure. Referring now to FIGS. **8**A, **11**, and **12**, the door **1135** of the seat attachment housing **1105**, **1110** is shown having been slid into the open configuration exposing the opening **1130** and the adapter receiving cavity **1205**. The adapter receiving cavity **1205** can have any size and shape for removably coupling a portion of a removable seat attachment adapter **84** therein. In one example embodiment, all or a portion of the cross-sectional shape of the adapter receiving cavity **1205** can be keyed or have a keyed shape **1210** and all or a portion of the removable seat attachment adapter **84** can have a corresponding outer perimeter shape such that the removable seat attachment adapter **84** can only be inserted into the adapter receiving cavity **1205** in one, proper orientation.

FIGS. **13**A-C are partial perspective views of the removable seat attachment adapter **84** coupled to the seat attachment housing **1105** according to one example embodiment of the disclosure. Now referring to FIGS. **8**A, **11**, **12**, and **13**A-C, once the door **1135** has been moved into the open configuration exposing the opening **1130** and the adapter receiving cavity **1205**, a first end **84***a* of the removable seat attachment adapter **84** can be inserted into the adapter receiving cavity **1205**. In certain example embodiments, the adapter receiving cavity **1205** can include one or more stop flanges **1315**, **1320** that extend out from an inner surface of the cavity **1205** and into the cavity area to abut against a bottom side of the first end **84***a* of the removable seat attachment adapter **84** when the adapter **84** has penetrated a sufficient amount into the adapter receiving cavity **1205**. Once the adapter **84** is inserted into the cavity **1205** and removably coupled to the seat attachment housing **1105**, a stroller seat can be removable coupled to a seat connector disposed on or adjacent to the second end **84***b* of the removable seat attachment adapter **84**. The seat connector on the second end **84***b* can be a multipurpose general connector that allows different seats to be interchangeably connected to the removable seat attachment adapter **84**. Any style seat may be configured to connect to the seat connector including, but not limited to, a stroller seat, a baby seat, a bassinet, a pram, a baby carrier, or a car seat, for example.

The removable seat attachment adapter **84** can also include a stop collar **1335** disposed a predetermined distance up from the first end **84***a* of the adapter **84**. In one example

embodiment, the stop collar **1335** is sized and shaped so that it will not fit into the opening **1130** and will not fit into the adapter receiving cavity **1205** as the first end **84***a* of the adapter **84** is being inserted into the adapter receiving cavity **1205**. The size and shape of the outer surface of the stop collar **1335**, being greater than that of the outer surface of the previous portion of the first end **84***a* inserted into the adapter receiving cavity **1205** will contact and abut an outer surface of the seat attachment housing **1105** when the adapter **84** has penetrated a sufficient amount into the adapter receiving cavity **1205**.

The removable seat attachment adapter **84** can also include a spring-loaded latching tab **1305** disposed along one side of the adapter **84** between the first end **84***a* and the stop collar **1335**. In certain example embodiments, the spring-loaded latching tab **1305** can be spring biased into an extended position (as shown in FIG. **13**B) via, for example, a spring (not shown). As the adapter **84** is first being inserted into the adapter receiving cavity **1205**, the width of the adapter **84** at the point of the spring-loaded latching tab **1305**, is greater than the width of the cavity **1205**, which causes one or more side walls of the cavity **1205** to apply a force to the spring-loaded latching tab **1305** and push it inward from the extended position towards a retracted position, thereby allowing the first end **84***a* of the adapter **84** to continue moving into the adapter receiving cavity **1205**. When the adapter **84** is inserted into the adapter receiving cavity **1205** a sufficient distance (which can be configurable based on the design specifics on the stroller), the spring-loaded latching tab **1305** can be positioned adjacent a tab receiver **1307**. The tab receiver **1307** can be a cut-out or opening along one of the side walls of the cavity **1205** that allows the tab **1305** to move hack to the extended position. The tab receiver **1307** can include a tab retainer surface **1310** that abuts a top side of the tab **1305** and prevents the removable seat attachment adapter **84** from being removed from the adapter receiving cavity **1205** while the spring-loaded latch tab **1305** is in the extended position.

The removable seat attachment adapter **84** can also include a tab release button **1330** that is operatively coupled to and configured to move the spring-loaded latching tab **1305** from the extended position to the retracted position via, for example, a guide wire **1325** or other attachment mechanism. For example, when the removable seat attachment adapter **84** is latched into the seat attachment housing **1105**, a parent or guardian can grab the removable seat attachment adapter **84** and depress the tab release button **1330**, causing the guide wire to pull the spring-loaded latching tab **1305** inward from the extended position to the retracted position with a force greater than the spring biasing force on the tab **1305** and allowing the parent or guardian to remove the removable seat attachment adapter **84** from the adapter receiving cavity **1205** using only a single hand. Thereby, the ease of decoupling the removable seat attachment adapter **84** from the stroller frame **81** is improved.

In addition, as shown in FIG. **13**B, in certain example embodiments, the bottom end of the adapter receiving cavity **1205** and corresponding bottom end of the seat attachment housing **1105** can be open **1340** to the environment. Leaving the bottom side of the cavity **1205** open **1340** to the environment helps to prevent liquid and material build-up in the cavity **1205** when the removable seat attachment adapter **84** is not coupled into the cavity **1205** by allowing the liquid and materials to pass through the cavity **1205** and out of the bottom of the seat attachment housing **1105**. This is especially beneficial when the parent or guardian removes the removable seat attachment adapter **84** from the cavity **1205** but does slide the door **1135** into the closed position to close up the opening **1130**.

FIGS. **14**A-C are partial perspective views of an alternative embodiment of the seat attachment housing **1405**, **1410** according to another example embodiment of the disclosure. Referring now to FIGS. **8**A, **11**, and **14**A-C, the seat attachment housings **1405**, **1410** are substantially the same as the seat attachment housings **1105**, **1110** described in FIGS. **11-13**C except for as described below. Therefore, the description of the seat attachment housings **1105**, **1110** in FIGS. **11-13**C above is incorporated herein for the alternative seat attachment housings **1405**, **1410**, except with regard to the distinctions described below.

As shown in FIG. **14**C, each seat attachment housing **1405**, **1410** includes an opening or open end **1130** positioned along a top side of the respective seat attachment housings **1405**, **1410**. The opening **1130** can provide access to an adapter receiving cavity **1205**. Each seat attachment housing **1405**, **1410** also includes one or more stop flanges **1315**, **1320** that extend out from an interior wall **1411** of the cavity **1205** and into the cavity area. In addition, the bottom end of the adapter receiving cavity **1205** and corresponding bottom end of each seat attachment housing **1405**, **1410** can have an opening or open end **1340** to the environment and with the cavity **1205** and opening **1130** provides a through-hole **1413** through the seat attachment housing **1405**, **1410**.

Each seat attachment housing **1405**, **1410** can include a rotating door **1415** rotatably coupled to the seat attachment housing **1405**, **1410**. For example, the rotating door **1415** can have a fixed end that is rotatably coupled to the top side of the seat attachment housing **1405**, **1410** or an interior wall **1411** of the opening **1130** or adapter receiving cavity **1205** by way of one or more hinges **1420**. Alternatively, other devices may be used to allow the door **1415** to rotate from a closed configuration **1415***a* to an open configuration **1415***b*, as shown in FIG. **14**C. In certain example embodiments, the door **1415** and/or the rotating mechanism or hinge **1420** that the door **1415** is coupled to can be spring-biased into the closed configuration **1415***a* through the use of a spring or other biasing means. Spring-biasing the door **1415** into a closed configuration **1415***a*. can help to prevent fluids and other material contaminants from entering the adapter receiving cavity **1205** when the removable seat attachment adapter **84** is not coupled into the adapter receiving cavity **1205**.

When a parent or guardian wants to add a second stroller seat **85** to the stroller **80**, they can insert the removable seat attachment adapter **84** into the adapter receiving cavity **1205** by pressing or applying a force with the first end **84***a* of the removable seat attachment adapter **84** against the top side of the rotating door **1415** with a force that is greater than the spring-biasing force. This will cause the door **1415** to rotate from the closed configuration **1415***a* towards the open configuration **1415***b* and allow the first end **84***a* of the removable seat attachment adapter to enter into the adapter receiving cavity **1205** and be coupled to the seat attachment housing **1405**, **1410**.

When the parent or guardian removes the removable seat attachment adapter **84**, as described above with regard to FIGS. **13**A-C, as the first end **84***a* of the removable seat attachment adapter **84** exits the adapter receiving cavity **1205** and opening **1130**, the spring-bias of the hinge **1420** or door **1415** will cause the door **1415** to automatically rotate from the open configuration **1415***b* to the closed configuration **1415***a*, thereby limiting access to the opening **1130** and

the adapter receiving cavity **1205** from the top side of the seat attachment housing **1405**, **1410**.

While the above description contains many specifics, these specifics should not be construed as limitations on the scope of the disclosure, but merely as exemplifications of the disclosed embodiments. Those skilled in the art will envision many other possible variations that are within the scope of the disclosure.

The invention claimed is:

1. A stroller system for supporting a front stroller seat and a rear stroller seat, the system comprising:

a pair of rear wheels;

a pair of front wheels;

a frame including a handle portion, a rear wheel support portion, a front wheel support portion and a folding mechanism connecting the front wheel support portion and the handle portion in both an unfolded configuration and in a folded configuration, wherein the folding mechanism connects the rear wheel support portion to the front wheel support portion and the handle portion, wherein the frame includes a stroller seat support portion positioned at a first vertical position adjacent the handle portion, and wherein the front wheel support portion and the handle portion are substantially parallel when the frame is in the unfolded configuration; and

a front seat attachment configured for attachment to the front wheel support portion at a second vertical position substantially lower than the first vertical position,

wherein the front seat attachment is configured to releasably connect to and support the front stroller seat in either a forward-facing configuration or a backward-facing configuration,

wherein the front seat attachment is configured to support the front stroller seat substantially over the front wheels so that a center of gravity of the stroller system is between the front wheels and the rear wheels;

wherein the rear wheel support portion extends diagonally from the front wheel support portion when the frame is in the unfolded configuration, and the rear wheel support portion is disposed adjacent to both the front wheel support portion and the handle portion when the frame is in the folded configuration; and

wherein the stroller seat support portion positioned at the first vertical position and the front seat attachment at the second vertical position create an inline descending configuration of the rear stroller seat and the front stroller seat.

2. The stroller system of claim **1**, wherein the folding mechanism includes at least one pivot point.

3. The stroller system of claim **1**, wherein the stroller seat support portion is configured to support the rear stroller seat substantially over the rear wheels.

4. The stroller system of claim **1**, wherein the front seat attachment includes a first connector portion and a second connector portion, the first connector portion configured to removably attach to a left side of the front wheel support portion, and the second connector portion configured to removably attach to a right side of the front wheel support portion.

5. The stroller system of claim **4**, wherein the front seat attachment includes a pair of seat attachment elements configured to releasably support the front stroller seat in either the forward-facing configuration or in the backward-facing configuration.

6. The stroller system of claim **5**, wherein the front wheel support portion includes a first attachment portion and a second attachment portion, the first attachment portion on the left side and configured to support the first connector portion, and the second attachment portion on the right side and configured to support the second connector portion.

7. The stroller system of claim **6**, wherein the front seat attachment includes at least one attachment frame member.

8. The stroller system of claim **4**, wherein the front wheel support portion includes a pair of parallel support members.

9. The stroller system of claim **8**, wherein the parallel support members include a pair of attachment portions configured to support the first connector portion and the second connector portion.

10. The stroller system of claim **9**, wherein the attachment portions include left and right slots in the parallel support members configured to receive the first connector portion and the second connector portion.

11. The stroller system of claim **8**, wherein the parallel support members include a pair of tubular structures, each of the tubular structures having a rounded cross-section.

12. The stroller system of claim **8**, wherein the rear wheel support portion includes a pair of parallel support members connected by the folding mechanism to the parallel support members of the front wheel support portion.

13. The stroller system of claim **12**, wherein the folding mechanism includes a pair of pivots spaced apart and configured to connect corresponding ones of the parallel support members of the rear and front wheel support portions.

14. The stroller system of claim **13**, wherein the handle portion includes a pair of parallel support members and a crossbar, wherein the parallel support members of the handle portion connect to the parallel support members of the front wheel support portion via the folding mechanism, and wherein the parallel support members of the handle portion and of the front wheel support portion extend diagonally downwards from the crossbar of the handle portion.

15. The stroller system of claim **1**, wherein the stroller seat support portion is configured to releasably support the rear stroller seat.

16. The stroller system of claim **1**, wherein the stroller seat support portion is configured to support the rear stroller seat in either a forward-facing configuration or a backward-facing configuration.

17. The stroller system of claim **1**, wherein the front seat attachment is further configured to connect to one or more sides of the front stroller seat.

18. The stroller system of claim **1**, wherein the rear wheel support portion includes the stroller seat support portion.

19. The stroller system of claim **1**, wherein the pair of front wheels includes only two front wheels.

20. The stroller system of claim **19**, wherein the only two front wheels are laterally spaced apart from each other on a left side and a right side of the front wheel support portion.

21. The stroller system of claim **1**, wherein the folded configuration includes at east partially overlapping the front wheel support portion and the handle portion.

22. The stroller system of claim **1** wherein the front seat attachment is configured to releasable attach to the front wheel support portion.

* * * * *

UNITED STATES PATENT AND TRADEMARK OFFICE

CERTIFICATE OF CORRECTION

PATENT NO. : 11,505,231 B1
APPLICATION NO. : 17/877323
DATED : November 22, 2022
INVENTOR(S) : Mark Zehfuss

It is certified that error appears in the above-identified patent and that said Letters Patent is hereby corrected as shown below:

In the Claims

Column 18, Line 59, In Claim 21, “east” should read - least -.

Column 18, Line 61, In Claim 22, “releasable” should read - releasably -.

Signed and Sealed this
Twenty-first Day of November, 2023

Katherine Kelly Vidal

Katherine Kelly Vidal
Director of the United States Patent and Trademark Office