UNITED STATES PATENT AND TRADEMARK OFFICE

UNITED STATES DEPARTMENT OF COMMERCE
United States Patent and Trademark Office
Address: COMMISSIONER FOR PATENTS
P.O. Box 1450
Alexandria, Virginia 22313-1450
www.uspto.gov

APPLICATION NO.	FILING DATE	FIRST NAMED INVENTOR	ATTORNEY DOCKET NO.	CONFIRMATION NO.
18/051,053	10/31/2022	Mark Zehfuss	34757-2709	6816

134811 7590 01/23/2024
Eversheds Sutherland (US) LLP/NWL
999 Peachtree Street
Suite 2300
Atlanta, GA 30309

EXAMINER
DOLAK, JAMES M

ART UNIT	PAPER NUMBER
3618	

NOTIFICATION DATE	DELIVERY MODE
01/23/2024	ELECTRONIC

Please find below and/or attached an Office communication concerning this application or proceeding.

The time period for reply, if any, is set in the attached communication.

Notice of the Office communication was sent electronically on above-indicated "Notification Date" to the following e-mail address(es):

NewellPatents@eversheds-sutherland.us
patentdocket@eversheds-sutherland.com
umarbakhsh@eversheds-sutherland.us

PTOL-90A (Rev. 04/07)

UNITED STATES PATENT AND TRADEMARK OFFICE

UNITED STATES DEPARTMENT OF COMMERCE
United States Patent and Trademark Office
Address: COMMISSIONER FOR PATENTS
P.O. Box 1450
Alexandria, Virginia 22313-1450
www.uspto.gov

APPLICATION NO.	ISSUE DATE	PATENT NO.
18/051,053	23-Jan-2024	11878729

Eversheds Sutherland (US) LLP/NWL
999 Peachtree Street
Atlanta, GA 30309

EGRANT NOTIFICATION

Your electronic patent grant (eGrant) is now available, which can be accessed via Patent Center at https://patentcenter.uspto.gov

The electronic patent grant is the official patent grant under 35 U.S.C. 153. For more information, please visit https://www.uspto.gov/electronicgrants

UNITED STATES PATENT AND TRADEMARK OFFICE

UNITED STATES DEPARTMENT OF COMMERCE
United States Patent and Trademark Office
Address: COMMISSIONER FOR PATENTS
P.O. Box 1450
Alexandria, Virginia 22313-1450
www.uspto.gov

APPLICATION NO.	ISSUE DATE	PATENT NO.	ATTORNEY DOCKET NO.	CONFIRMATION NO.
18/051,053	01/23/2024	11878729	34757-2709	6816

134811 7590 01/03/2024
Eversheds Sutherland (US) LLP/NWL
999 Peachtree Street
Suite 2300
Atlanta, GA 30309

ISSUE NOTIFICATION

The projected patent number and issue date are specified above. The patent will issue electronically. The electronically issued patent is the official patent grant pursuant to 35 U.S.C. § 153. The patent may be accessed on or after the issue date through Patent Center at https://patentcenter.uspto.gov/. The patent will be available in both the public and the private sides of Patent Center. Further assistance in electronically accessing the patent, or about Patent Center, is available by calling the Patent Electronic Business Center at 1-888-217-9197.

The USPTO is implementing electronic patent issuance with a transition period, during which period the USPTO will mail a ceremonial paper copy of the electronic patent grant to the correspondence address of record. Additional copies of the patent (i.e., certified and presentation copies) may be ordered for a fee from the USPTO's Certified Copy Center at https://certifiedcopycenter.uspto.gov/index.html. The Certified Copy Center may be reached at (800)972-6382.

Determination of Patent Term Adjustment under 35 U.S.C. 154 (b)
(application filed on or after May 29, 2000)

The Patent Term Adjustment is 0 day(s). Any patent to issue from the above-identified application will include an indication of the adjustment on the front page.

If a Continued Prosecution Application (CPA) was filed in the above-identified application, the filing date that determines Patent Term Adjustment is the filing date of the most recent CPA.

Applicant will be able to obtain more detailed information by accessing the Patent Center (https://patentcenter.uspto.gov).

Any questions regarding the Patent Term Extension or Adjustment determination should be directed to the Office of Patent Legal Administration at (571)-272-7702. Questions relating to issue and publication fee payments should be directed to the Application Assistance Unit (AAU) of the Office of Patents Stakeholder Experience (OPSE), Stakeholder Support Division (SSD) at (571)-272-4200.

INVENTOR(s) (Please see PATENT CENTER site https://patentcenter.uspto.gov for additional inventors):

Mark Zehfuss, Glen Allen, VA;

APPLICANT(s) (Please see PATENT CENTER site https://patentcenter.uspto.gov for additional applicants):

Baby Jogger, LLC, Atlanta, GA;

The United States represents the largest, most dynamic marketplace in the world and is an unparalleled location for business investment, innovation, and commercialization of new technologies. The USA offers tremendous resources and advantages for those who invest and manufacture goods here. Through SelectUSA, our nation works to encourage and facilitate business investment. To learn more about why the USA is the best country in the world to develop technology, manufacture products, and grow your business, visit SelectUSA.gov.

INFORMATION DISCLOSURE STATEMENT BY APPLICANT (Not for submission under 37 CFR 1.99) Change(s) applied to document,	Application Number	18051053
	Filing Date	2022-10-31
	First Named Inventor	Mark Zehfuss
	Art Unit	TBD
	Examiner Name	TBD
	Attorney Docket Number	34757-2709

/N.B.H./
9/26/2023

	3	001001572-0002	~~EU~~ EM		2008-11-09	Unique Product and design Co., Ltd.		☐
	4	129880-0001	TW		2009-07-21	UNIQUE PRODUCT & DESIGN CO LTD		☐
	5	2188062	CN	Y	1995-01-25	HUANG MINGCHENG		☐
	6	2759883	CN	Y	2006-02-22	ZHENG HUANGYI		☐
	7	2784272	CN	Y	2006-05-31	SHEN HAIDONG		☐
	8	2841450	CN	Y	2006-11-29	GU JINGDE		☐
	9	101306695	CN	B	2010-11-10	LI ZEJUN		☐
	10	201214440	CN	Y	2009-04-01	LIU FENG		☐

If you wish to add additional Foreign Patent Document citation information please click the Add button

NON-PATENT LITERATURE DOCUMENTS

Examiner Initials*	Cite No	Include name of the author (in CAPITAL LETTERS), title of the article (when appropriate), title of the item (book, magazine, journal, serial, symposium, catalog, etc), date, pages(s), volume-issue number(s), publisher, city and/or country where published.	T[5]
	1		☐

If you wish to add additional non-patent literature document citation information please click the Add button

REFERENCES CONSIDERED EXCEPT WHERE LINE

INFORMATION DISCLOSURE STATEMENT BY APPLICANT (Not for submission under 37 CFR 1.99)		
	Application Number	18051053
	Filing Date	2022-10-31
	First Named Inventor	Mark Zehfuss
	Art Unit	TBD
	Examiner Name	TBD
	Attorney Docket Number	34757-2709

	42	6102431	A	2000-08-15	Sutherland et al.	
	43	6102432	A	2000-08-15	Cheng	
	44	6991248	B2	2006-01-31	Valdez et al.	

If you wish to add additional U.S. Patent citation information please click the Add button.

U.S.PATENT APPLICATION PUBLICATIONS

Examiner Initial*	Cite No	Publication Number	Kind Code[1]	Publication Date	Name of Patentee or Applicant of cited Document	Pages,Columns,Lines where Relevant Passages or Relevant Figures Appear
	1	20060290107	A1	2006-12-28	Powers	
	2	20100013281	A1	2010-01-21	Chen et al.	

If you wish to add additional U.S. Published Application citation information please click the Add button.

FOREIGN PATENT DOCUMENTS

Examiner Initial*	Cite No	Foreign Document Number[3]	Country Code[2] i	Kind Code[4]	Publication Date	Name of Patentee or Applicant of cited Document	Pages,Columns,Lines where Relevant Passages or Relevant Figures Appear	T[5]
	1	3463874	CN	S	2005-07-27	GOODBABY CHILD PRODUCTS CO LTD		☐
Change(s) applied to document, /N.B.H./ 9/26/2023	2	000822556-0003	~~EU~~ EM		2007-07-11	ABC Design GmbH		☐

EFS Web 2.1.17

UNITED STATES
PATENT AND TRADEMARK OFFICE

P.O. Box 1450
Alexandria, VA 22313 - 1450
www.uspto.gov

ELECTRONIC ACKNOWLEDGEMENT RECEIPT

APPLICATION #	RECEIPT DATE / TIME	ATTORNEY DOCKET #
18/051,053	**12/08/2023 01:33:47 PM Z ET**	**34757-2709**

Title of Invention

Removable Seat Attachments for Strollers

Application Information

APPLICATION TYPE	Utility - Nonprovisional Application under 35 USC 111(a)	PATENT #	-
CONFIRMATION #	6816	FILED BY	Loretta Garcia
PATENT CENTER #	63543576	FILING DATE	10/31/2022
CUSTOMER #	134811	FIRST NAMED INVENTOR	Mark Zehfuss
CORRESPONDENCE ADDRESS	-	AUTHORIZED BY	Umar Bakhsh

Documents

TOTAL DOCUMENTS: 1

DOCUMENT	PAGES	DESCRIPTION	SIZE (KB)
34757-2709-Issue fee payment.pdf	1	Issue Fee Payment (PTO-85B)	132 KB

Digest

DOCUMENT	MESSAGE DIGEST(SHA-512)
34757-2709-Issue fee payment.pdf	EC11970D0B916C268B645B0B5B9F2CF95062A08211AACCE5E39F20E4AB6011D77E3D5F241EE856625E59D767C20DD575DAF6942910F22F5D2F40222204DD5896

This Acknowledgement Receipt evidences receipt on the noted date by the USPTO of the indicated documents, characterized

by the applicant, and including page counts, where applicable. It serves as evidence of receipt similar to a Post Card, as described in MPEP 503.

New Applications Under 35 U.S.C. 111

If a new application is being filed and the application includes the necessary components for filing date (see 37 CFR 1.53(b)-(d) and MPEP 506), a Filing Receipt (37 CFR 1.54) will be issued in due course and the date shown on this Acknowledgement Receipt will establish the filing date of the application

National Stage of an International Application under 35 U.S.C. 371

If a timely submission to enter the national stage of an international application is compliant with the conditions of 35 U.S.C. 371 and other applicable requirements a Form PCT/DO/EO/903 indicating acceptance of the application as a national stage submission under 35 U.S.C. 371 will be issued in addition to the Filing Receipt, in due course.

New International Application Filed with the USPTO as a Receiving Office

If a new international application is being filed and the international application includes the necessary components for an international filing date (see PCT Article 11 and MPEP 1810), a Notification of the International Application Number and of the International Filing Date (Form PCT/RO/105) will be issued in due course, subject to prescriptions concerning national security, and the date shown on this Acknowledgement Receipt will establish the international filing date of the application.

UNITED STATES
PATENT AND TRADEMARK OFFICE

P.O. Box 1450
Alexandria, VA 22313 - 1450
www.uspto.gov

ELECTRONIC PAYMENT RECEIPT

APPLICATION #	RECEIPT DATE / TIME	ATTORNEY DOCKET #
18/051,053	12/08/2023 01:33:47 PM Z ET	34757-2709

Title of Invention

Removable Seat Attachments for Strollers

Application Information

APPLICATION TYPE	Utility - Nonprovisional Application under 35 USC 111(a)	PATENT #	-
CONFIRMATION #	6816	FILED BY	Loretta Garcia
PATENT CENTER #	63543576	AUTHORIZED BY	Umar Bakhsh
CUSTOMER #	134811	FILING DATE	10/31/2022
CORRESPONDENCE ADDRESS	-	FIRST NAMED INVENTOR	Mark Zehfuss

Payment Information

PAYMENT METHOD	PAYMENT TRANSACTION ID	PAYMENT AUTHORIZED BY
DA / 195029	E2023B8D34028324	Umar Bakhsh

PRE-AUTHORIZED ACCOUNT	PRE-AUTHORIZED CATEGORY
195029	37 CFR 1.16 (National application filing, search, and examination fees); 37 CFR 1.17 (Patent application and reexamination processing fees); 37 CFR 1.19 (Document supply fees); 37 CFR 1.20 (Post Issuance fees); 37 CFR 1.21 (Miscellaneous fees and charges)

FEE CODE	DESCRIPTION	ITEM PRICE($)	QUANTITY	ITEM TOTAL($)
1501	UTILITY ISSUE FEE	1200.00	1	1200.00
			TOTAL AMOUNT:	$1,200.00

This Acknowledgement Receipt evidences receipt on the noted date by the USPTO of the indicated documents, characterized by the applicant, and including page counts, where applicable. It serves as evidence of receipt similar to a Post Card, as described in MPEP 503.

New Applications Under 35 U.S.C. 111

If a new application is being filed and the application includes the necessary components for filing date (see 37 CFR 1.53(b)-(d) and MPEP 506), a Filing Receipt (37 CFR 1.54) will be issued in due course and the date shown on this Acknowledgement

Receipt will establish the filing date of the application

National Stage of an International Application under 35 U.S.C. 371

If a timely submission to enter the national stage of an international application is compliant with the conditions of 35 U.S.C. 371 and other applicable requirements a Form PCT/DO/EO/903 indicating acceptance of the application as a national stage submission under 35 U.S.C. 371 will be issued in addition to the Filing Receipt, in due course.

New International Application Filed with the USPTO as a Receiving Office

If a new international application is being filed and the international application includes the necessary components for an international filing date (see PCT Article 11 and MPEP 1810), a Notification of the International Application Number and of the International Filing Date (Form PCT/RO/105) will be issued in due course, subject to prescriptions concerning national security, and the date shown on this Acknowledgement Receipt will establish the international filing date of the application.

PART B - FEE(S) TRANSMITTAL

Complete and send this form, together with applicable fee(s), by mail or fax, or via EFS-Web.

By mail, send to: Mail Stop ISSUE FEE
Commissioner for Patents
P.O. Box 1450
Alexandria, Virginia 22313-1450

By fax, send to: (571)-273-2885

INSTRUCTIONS: This form should be used for transmitting the ISSUE FEE and PUBLICATION FEE (if required). Blocks 1 through 5 should be completed where appropriate. All further correspondence will be mailed to the current correspondence address as indicated unless corrected below or directed otherwise in Block 1, by (a) specifying a new correspondence address; and/or (b) indicating a separate "FEE ADDRESS" for maintenance fee notifications. **Because electronic patent issuance may occur shortly after issue fee payment, any desired continuing application should preferably be filed prior to payment of this issue fee in order not to jeopardize copendency.**

CURRENT CORRESPONDENCE ADDRESS (Note: Use Block 1 for any change of address)

134811 7590 09/18/2023
Eversheds Sutherland (US) LLP/NWL
999 Peachtree Street
Suite 2300
Atlanta, GA 30309

Note: A certificate of mailing can only be used for domestic mailings of the Fee(s) Transmittal. This certificate cannot be used for any other accompanying papers. Each additional paper, such as an assignment or formal drawing, must have its own certificate of mailing or transmission.

Certificate of Mailing or Transmission

I hereby certify that this Fee(s) Transmittal is being deposited with the United States Postal Service with sufficient postage for first class mail in an envelope addressed to the Mail Stop ISSUE FEE address above, or being transmitted to the USPTO via EFS-Web or by facsimile to (571) 273-2885, on the date below.

(Typed or printed name)

(Signature)

(Date)

APPLICATION NO.	FILING DATE	FIRST NAMED INVENTOR	ATTORNEY DOCKET NO.	CONFIRMATION NO.
18/051,053	10/31/2022	Mark Zehfuss	34757-2709	6816

TITLE OF INVENTION: Removable Seat Attachments for Strollers

APPLN. TYPE	ENTITY STATUS	ISSUE FEE DUE	PUBLICATION FEE DUE	PREV. PAID ISSUE FEE	TOTAL FEE(S) DUE	DATE DUE
nonprovisional	UNDISCOUNTED	$1200	$0.00	$0.00	$1200	12/18/2023

EXAMINER	ART UNIT	CLASS-SUBCLASS
DOLAK, JAMES M	3618	280-047350

1. Change of correspondence address or indication of "Fee Address" (37 CFR 1.363).

❑ Change of correspondence address (or Change of Correspondence Address form PTO/AIA/122 or PTO/SB/122) attached.

❑ "Fee Address" indication (or "Fee Address" Indication form PTO/AIA/47 or PTO/SB/47; Rev 03-02 or more recent) attached. **Use of a Customer Number is required.**

2. For printing on the patent front page, list
(1) The names of up to 3 registered patent attorneys or agents OR, alternatively,
(2) The name of a single firm (having as a member a registered attorney or agent) and the names of up to 2 registered patent attorneys or agents. If no name is listed, no name will be printed.

1 Eversheds Sutherland (US) LLP
2
3

3. ASSIGNEE NAME AND RESIDENCE DATA TO BE PRINTED ON THE PATENT (print or type)

PLEASE NOTE: Unless an assignee is identified below, no assignee data will appear on the patent. If an assignee is identified below, the document must have been previously recorded, or filed for recordation, as set forth in 37 CFR 3.11 and 37 CFR 3.81(a). Completion of this form is NOT a substitute for filing an assignment.

(A) NAME OF ASSIGNEE: Baby Jogger, LLC

(B) RESIDENCE: (CITY and STATE OR COUNTRY): Atlanta, GA

Please check the appropriate assignee category or categories (will not be printed on the patent) : ❑ Individual ☒ Corporation or other private group entity ❑ Government

4a. Fees submitted: ☒ Issue Fee ❑ Publication Fee (if required)

4b. Method of Payment: *(Please first reapply any previously paid fee shown above)*

☒ Electronic Payment via Patent Center or EFS-Web ❑ Enclosed check ❑ Non-electronic payment by credit card (Attach form PTO-2038)

☒ The Director is hereby authorized to charge the required fee(s), any deficiency, or credit any overpayment to Deposit Account No. 195029

5. **Change in Entity Status** (from status indicated above)

❑ Applicant certifying micro entity status. See 37 CFR 1.29

NOTE: Absent a valid certification of Micro Entity Status (see forms PTO/SB/15A and 15B), issue fee payment in the micro entity amount will not be accepted at the risk of application abandonment.

❑ Applicant asserting small entity status. See 37 CFR 1.27

NOTE: If the application was previously under micro entity status, checking this box will be taken to be a notification of loss of entitlement to micro entity status.

❑ Applicant changing to regular undiscounted fee status.

NOTE: Checking this box will be taken to be a notification of loss of entitlement to small or micro entity status, as applicable.

NOTE: This form must be signed in accordance with 37 CFR 1.31 and 1.33. See 37 CFR 1.4 for signature requirements and certifications.

Authorized Signature /Umar R. Bakhsh/ Date December 8, 2023

Typed or printed name Umar R. Bakhsh Registration No. 67,307

UNITED STATES PATENT AND TRADEMARK OFFICE

UNITED STATES DEPARTMENT OF COMMERCE
United States Patent and Trademark Office
Address: COMMISSIONER FOR PATENTS
P.O. Box 1450
Alexandria, Virginia 22313-1450
www.uspto.gov

NOTICE OF ALLOWANCE AND FEE(S) DUE

134811 7590 09/18/2023
Eversheds Sutherland (US) LLP/NWL
999 Peachtree Street
Suite 2300
Atlanta, GA 30309

EXAMINER
DOLAK, JAMES M

ART UNIT	PAPER NUMBER
3618	

DATE MAILED: 09/18/2023

APPLICATION NO.	FILING DATE	FIRST NAMED INVENTOR	ATTORNEY DOCKET NO.	CONFIRMATION NO.
18/051,053	10/31/2022	Mark Zehfuss	34757-2709	6816

TITLE OF INVENTION: Removable Seat Attachments for Strollers

APPLN. TYPE	ENTITY STATUS	ISSUE FEE DUE	PUBLICATION FEE DUE	PREV. PAID ISSUE FEE	TOTAL FEE(S) DUE	DATE DUE
nonprovisional	UNDISCOUNTED	$1200	$0.00	$0.00	$1200	12/18/2023

THE APPLICATION IDENTIFIED ABOVE HAS BEEN EXAMINED AND IS ALLOWED FOR ISSUANCE AS A PATENT. PROSECUTION ON THE MERITS IS CLOSED. THIS NOTICE OF ALLOWANCE IS NOT A GRANT OF PATENT RIGHTS. THIS APPLICATION IS SUBJECT TO WITHDRAWAL FROM ISSUE AT THE INITIATIVE OF THE OFFICE OR UPON PETITION BY THE APPLICANT. SEE 37 CFR 1.313 AND MPEP 1308.

THE ISSUE FEE AND PUBLICATION FEE (IF REQUIRED) MUST BE PAID WITHIN THREE MONTHS FROM THE MAILING DATE OF THIS NOTICE OR THIS APPLICATION SHALL BE REGARDED AS ABANDONED. THIS STATUTORY PERIOD CANNOT BE EXTENDED. SEE 35 U.S.C. 151. THE ISSUE FEE DUE INDICATED ABOVE DOES NOT REFLECT A CREDIT FOR ANY PREVIOUSLY PAID ISSUE FEE IN THIS APPLICATION. IF AN ISSUE FEE HAS PREVIOUSLY BEEN PAID IN THIS APPLICATION (AS SHOWN ABOVE), THE RETURN OF PART B OF THIS FORM WILL BE CONSIDERED A REQUEST TO REAPPLY THE PREVIOUSLY PAID ISSUE FEE TOWARD THE ISSUE FEE NOW DUE.

HOW TO REPLY TO THIS NOTICE:

I. Review the ENTITY STATUS shown above. If the ENTITY STATUS is shown as SMALL or MICRO, verify whether entitlement to that entity status still applies.

If the ENTITY STATUS is the same as shown above, pay the TOTAL FEE(S) DUE shown above.

If the ENTITY STATUS is changed from that shown above, on PART B - FEE(S) TRANSMITTAL, complete section number 5 titled "Change in Entity Status (from status indicated above)".

For purposes of this notice, small entity fees are 40% the amount of undiscounted fees, and micro entity fees are 20% the amount of undiscounted fees.

II. PART B - FEE(S) TRANSMITTAL, or its equivalent, must be completed and returned to the United States Patent and Trademark Office (USPTO) with your ISSUE FEE and PUBLICATION FEE (if required). If you are charging the fee(s) to your deposit account, section "4b" of Part B - Fee(s) Transmittal should be completed. If an equivalent of Part B is filed, a request to reapply a previously paid issue fee must be clearly made, and delays in processing may occur due to the difficulty in recognizing the paper as an equivalent of Part B.

III. All communications regarding this application must give the application number. Please direct all communications prior to issuance to Mail Stop ISSUE FEE unless advised to the contrary.

IMPORTANT REMINDER: Maintenance fees are due in utility patents issuing on applications filed on or after Dec. 12, 1980. It is patentee's responsibility to ensure timely payment of maintenance fees when due. More information is available at www.uspto.gov/PatentMaintenanceFees.

PART B - FEE(S) TRANSMITTAL

Complete and send this form, together with applicable fee(s), by mail or fax, or via EFS-Web.

By mail, send to: Mail Stop ISSUE FEE
Commissioner for Patents
P.O. Box 1450
Alexandria, Virginia 22313-1450

By fax, send to: (571)-273-2885

INSTRUCTIONS: This form should be used for transmitting the ISSUE FEE and PUBLICATION FEE (if required). Blocks 1 through 5 should be completed where appropriate. All further correspondence will be mailed to the current correspondence address as indicated unless corrected below or directed otherwise in Block 1, by (a) specifying a new correspondence address; and/or (b) indicating a separate "FEE ADDRESS" for maintenance fee notifications. **Because electronic patent issuance may occur shortly after issue fee payment, any desired continuing application should preferably be filed prior to payment of this issue fee in order not to jeopardize copendency.**

CURRENT CORRESPONDENCE ADDRESS (Note: Use Block 1 for any change of address)

134811 7590 09/18/2023
Eversheds Sutherland (US) LLP/NWL
999 Peachtree Street
Suite 2300
Atlanta, GA 30309

Note: A certificate of mailing can only be used for domestic mailings of the Fee(s) Transmittal. This certificate cannot be used for any other accompanying papers. Each additional paper, such as an assignment or formal drawing, must have its own certificate of mailing or transmission.

Certificate of Mailing or Transmission

I hereby certify that this Fee(s) Transmittal is being deposited with the United States Postal Service with sufficient postage for first class mail in an envelope addressed to the Mail Stop ISSUE FEE address above, or being transmitted to the USPTO via EFS-Web or by facsimile to (571) 273-2885, on the date below.

(Typed or printed name)

(Signature)

(Date)

APPLICATION NO.	FILING DATE	FIRST NAMED INVENTOR	ATTORNEY DOCKET NO.	CONFIRMATION NO.
18/051,053	10/31/2022	Mark Zehfuss	34757-2709	6816

TITLE OF INVENTION: Removable Seat Attachments for Strollers

APPLN. TYPE	ENTITY STATUS	ISSUE FEE DUE	PUBLICATION FEE DUE	PREV. PAID ISSUE FEE	TOTAL FEE(S) DUE	DATE DUE
nonprovisional	UNDISCOUNTED	$1200	$0.00	$0.00	$1200	12/18/2023

EXAMINER	ART UNIT	CLASS-SUBCLASS
DOLAK, JAMES M	3618	280-047350

1. Change of correspondence address or indication of "Fee Address" (37 CFR 1.363).

❑ Change of correspondence address (or Change of Correspondence Address form PTO/AIA/122 or PTO/SB/122) attached.

❑ "Fee Address" indication (or "Fee Address" Indication form PTO/AIA/47 or PTO/SB/47; Rev 03-02 or more recent) attached. **Use of a Customer Number is required.**

2. For printing on the patent front page, list
(1) The names of up to 3 registered patent attorneys or agents OR, alternatively,
(2) The name of a single firm (having as a member a registered attorney or agent) and the names of up to 2 registered patent attorneys or agents. If no name is listed, no name will be printed.

1_____
2_____
3_____

3. ASSIGNEE NAME AND RESIDENCE DATA TO BE PRINTED ON THE PATENT (print or type)

PLEASE NOTE: Unless an assignee is identified below, no assignee data will appear on the patent. If an assignee is identified below, the document must have been previously recorded, or filed for recordation, as set forth in 37 CFR 3.11 and 37 CFR 3.81(a). Completion of this form is NOT a substitute for filing an assignment.

(A) NAME OF ASSIGNEE (B) RESIDENCE: (CITY and STATE OR COUNTRY)

Please check the appropriate assignee category or categories (will not be printed on the patent) : ❑ Individual ❑ Corporation or other private group entity ❑ Government

4a. Fees submitted: ❑Issue Fee ❑Publication Fee (if required)

4b. Method of Payment: *(Please first reapply any previously paid fee shown above)*

❑ Electronic Payment via Patent Center or EFS-Web ❑ Enclosed check ❑ Non-electronic payment by credit card (Attach form PTO-2038)

❑ The Director is hereby authorized to charge the required fee(s), any deficiency, or credit any overpayment to Deposit Account No. _____

5. **Change in Entity Status** (from status indicated above)

❑ Applicant certifying micro entity status. See 37 CFR 1.29

NOTE: Absent a valid certification of Micro Entity Status (see forms PTO/SB/15A and 15B), issue fee payment in the micro entity amount will not be accepted at the risk of application abandonment.

❑ Applicant asserting small entity status. See 37 CFR 1.27

NOTE: If the application was previously under micro entity status, checking this box will be taken to be a notification of loss of entitlement to micro entity status.

❑ Applicant changing to regular undiscounted fee status.

NOTE: Checking this box will be taken to be a notification of loss of entitlement to small or micro entity status, as applicable.

NOTE: This form must be signed in accordance with 37 CFR 1.31 and 1.33. See 37 CFR 1.4 for signature requirements and certifications.

Authorized Signature _____ Date _____

Typed or printed name _____ Registration No. _____

UNITED STATES DEPARTMENT OF COMMERCE
United States Patent and Trademark Office
Address: COMMISSIONER FOR PATENTS
P.O. Box 1450
Alexandria, Virginia 22313-1450
www.uspto.gov

APPLICATION NO.	FILING DATE	FIRST NAMED INVENTOR	ATTORNEY DOCKET NO.	CONFIRMATION NO.
18/051,053	10/31/2022	Mark Zehfuss	34757-2709	6816

134811 7590 09/18/2023
Eversheds Sutherland (US) LLP/NWL
999 Peachtree Street
Suite 2300
Atlanta, GA 30309

EXAMINER
DOLAK, JAMES M

ART UNIT	PAPER NUMBER
3618	

DATE MAILED: 09/18/2023

Determination of Patent Term Adjustment under 35 U.S.C. 154 (b)
(Applications filed on or after May 29, 2000)

The Office has discontinued providing a Patent Term Adjustment (PTA) calculation with the Notice of Allowance.

Section 1(h)(2) of the AIA Technical Corrections Act amended 35 U.S.C. 154(b)(3)(B)(i) to eliminate the requirement that the Office provide a patent term adjustment determination with the notice of allowance. See Revisions to Patent Term Adjustment, 78 Fed. Reg. 19416, 19417 (Apr. 1, 2013). Therefore, the Office is no longer providing an initial patent term adjustment determination with the notice of allowance. The Office will continue to provide a patent term adjustment determination with the Issue Notification Letter that is mailed to applicant approximately three weeks prior to the issue date of the patent, and will include the patent term adjustment on the patent. Any request for reconsideration of the patent term adjustment determination (or reinstatement of patent term adjustment) should follow the process outlined in 37 CFR 1.705.

Any questions regarding the Patent Term Extension or Adjustment determination should be directed to the Office of Patent Legal Administration at (571)-272-7702. Questions relating to issue and publication fee payments should be directed to the Customer Service Center of the Office of Patent Publication at 1-(888)-786-0101 or (571)-272-4200.

OMB Clearance and PRA Burden Statement for PTOL-85 Part B

The Paperwork Reduction Act (PRA) of 1995 requires Federal agencies to obtain Office of Management and Budget approval before requesting most types of information from the public. When OMB approves an agency request to collect information from the public, OMB (i) provides a valid OMB Control Number and expiration date for the agency to display on the instrument that will be used to collect the information and (ii) requires the agency to inform the public about the OMB Control Number's legal significance in accordance with 5 CFR 1320.5(b).

The information collected by PTOL-85 Part B is required by 37 CFR 1.311. The information is required to obtain or retain a benefit by the public which is to file (and by the USPTO to process) an application. Confidentiality is governed by 35 U.S.C. 122 and 37 CFR 1.14. This collection is estimated to take 30 minutes to complete, including gathering, preparing, and submitting the completed application form to the USPTO. Time will vary depending upon the individual case. Any comments on the amount of time you require to complete this form and/or suggestions for reducing this burden, should be sent to the Chief Information Officer, U.S. Patent and Trademark Office, U.S. Department of Commerce, P.O. Box 1450, Alexandria, Virginia 22313-1450. DO NOT SEND FEES OR COMPLETED FORMS TO THIS ADDRESS. SEND TO: Commissioner for Patents, P.O. Box 1450, Alexandria, Virginia 22313-1450. Under the Paperwork Reduction Act of 1995, no persons are required to respond to a collection of information unless it displays a valid OMB control number.

Privacy Act Statement

The Privacy Act of 1974 (P.L. 93-579) requires that you be given certain information in connection with your submission of the attached form related to a patent application or patent. Accordingly, pursuant to the requirements of the Act, please be advised that: (1) the general authority for the collection of this information is 35 U.S.C. 2(b)(2); (2) furnishing of the information solicited is voluntary; and (3) the principal purpose for which the information is used by the U.S. Patent and Trademark Office is to process and/or examine your submission related to a patent application or patent. If you do not furnish the requested information, the U.S. Patent and Trademark Office may not be able to process and/or examine your submission, which may result in termination of proceedings or abandonment of the application or expiration of the patent.

The information provided by you in this form will be subject to the following routine uses:

1. The information on this form will be treated confidentially to the extent allowed under the Freedom of Information Act (5 U.S.C. 552) and the Privacy Act (5 U.S.C 552a). Records from this system of records may be disclosed to the Department of Justice to determine whether disclosure of these records is required by the Freedom of Information Act.
2. A record from this system of records may be disclosed, as a routine use, in the course of presenting evidence to a court, magistrate, or administrative tribunal, including disclosures to opposing counsel in the course of settlement negotiations.
3. A record in this system of records may be disclosed, as a routine use, to a Member of Congress submitting a request involving an individual, to whom the record pertains, when the individual has requested assistance from the Member with respect to the subject matter of the record.
4. A record in this system of records may be disclosed, as a routine use, to a contractor of the Agency having need for the information in order to perform a contract. Recipients of information shall be required to comply with the requirements of the Privacy Act of 1974, as amended, pursuant to 5 U.S.C. 552a(m).
5. A record related to an International Application filed under the Patent Cooperation Treaty in this system of records may be disclosed, as a routine use, to the International Bureau of the World Intellectual Property Organization, pursuant to the Patent Cooperation Treaty.
6. A record in this system of records may be disclosed, as a routine use, to another federal agency for purposes of National Security review (35 U.S.C. 181) and for review pursuant to the Atomic Energy Act (42 U.S.C. 218(c)).
7. A record from this system of records may be disclosed, as a routine use, to the Administrator, General Services, or his/her designee, during an inspection of records conducted by GSA as part of that agency's responsibility to recommend improvements in records management practices and programs, under authority of 44 U.S.C. 2904 and 2906. Such disclosure shall be made in accordance with the GSA regulations governing inspection of records for this purpose, and any other relevant (i.e., GSA or Commerce) directive. Such disclosure shall not be used to make determinations about individuals.
8. A record from this system of records may be disclosed, as a routine use, to the public after either publication of the application pursuant to 35 U.S.C. 122(b) or issuance of a patent pursuant to 35 U.S.C. 151. Further, a record may be disclosed, subject to the limitations of 37 CFR 1.14, as a routine use, to the public if the record was filed in an application which became abandoned or in which the proceedings were terminated and which application is referenced by either a published application, an application open to public inspection or an issued patent.
9. A record from this system of records may be disclosed, as a routine use, to a Federal, State, or local law enforcement agency, if the USPTO becomes aware of a violation or potential violation of law or regulation.

Notice of Allowability	Application No. 18/051,053	Applicant(s) Zehfuss, Mark	
	Examiner JAMES M DOLAK	Art Unit 3618	AIA (FITF) Status No

-- The MAILING DATE of this communication appears on the cover sheet with the correspondence address--

All claims being allowable, PROSECUTION ON THE MERITS IS (OR REMAINS) CLOSED in this application. If not included herewith (or previously mailed), a Notice of Allowance (PTOL-85) or other appropriate communication will be mailed in due course. **THIS NOTICE OF ALLOWABILITY IS NOT A GRANT OF PATENT RIGHTS.** This application is subject to withdrawal from issue at the initiative of the Office or upon petition by the applicant. See 37 CFR 1.313 and MPEP 1308.

1. ☑ This communication is responsive to 10/31/2022.
   ☐ A declaration(s)/affidavit(s) under **37 CFR 1.130(b)** was/were filed on _____.

2. ☐ An election was made by the applicant in response to a restriction requirement set forth during the interview on _____; the restriction requirement and election have been incorporated into this action.

3. ☑ The allowed claim(s) is/are 1-22 . As a result of the allowed claim(s), you may be eligible to benefit from the **Patent Prosecution Highway** program at a participating intellectual property office for the corresponding application. For more information, please see **http://www.uspto.gov/patents/init_events/pph/index.jsp** or send an inquiry to **PPHfeedback@uspto.gov.**

4. ☐ Acknowledgment is made of a claim for foreign priority under 35 U.S.C. § 119(a)-(d) or (f).

   Certified copies:

   a) ☐ All b) ☐ Some* c) ☐ None of the:

   1. ☐ Certified copies of the priority documents have been received.
   2. ☐ Certified copies of the priority documents have been received in Application No. _____ .
   3. ☐ Copies of the certified copies of the priority documents have been received in this national stage application from the International Bureau (PCT Rule 17.2(a)).

   * Certified copies not received: _____ .

Applicant has THREE MONTHS FROM THE "MAILING DATE" of this communication to file a reply complying with the requirements noted below. Failure to timely comply will result in ABANDONMENT of this application.
THIS THREE-MONTH PERIOD IS NOT EXTENDABLE.

5. ☐ CORRECTED DRAWINGS (as "replacement sheets") must be submitted.
   ☐ including changes required by the attached Examiner's Amendment / Comment or in the Office action of Paper No./Mail Date _____ .

   Identifying indicia such as the application number (see 37 CFR 1.84(c)) should be written on the drawings in the front (not the back) of each sheet. Replacement sheet(s) should be labeled as such in the header according to 37 CFR 1.121(d).

6. ☐ DEPOSIT OF and/or INFORMATION about the deposit of BIOLOGICAL MATERIAL must be submitted. Note the attached Examiner's comment regarding REQUIREMENT FOR THE DEPOSIT OF BIOLOGICAL MATERIAL.

Attachment(s)

1. ☑ Notice of References Cited (PTO-892)
2. ☑ Information Disclosure Statements (PTO/SB/08), Paper No./Mail Date _____.
3. ☐ Examiner's Comment Regarding Requirement for Deposit of Biological Material _____.
4. ☑ Interview Summary (PTO-413), Paper No./Mail Date. _____.
5. ☑ Examiner's Amendment/Comment
6. ☑ Examiner's Statement of Reasons for Allowance
7. ☐ Other _____.

/JAMES M DOLAK/
Primary Examiner, Art Unit 3618

DETAILED ACTION

Notice of Pre-AIA or AIA Status

1. The present application is being examined under the pre-AIA first to invent provisions.

Information Disclosure Statement

2. The information disclosure statement (IDS) submitted on 10/31/2022 was filed in compliance with the provisions of 37 CFR 1.97. Accordingly, the information disclosure statement is being considered by the examiner.

EXAMINER'S AMENDMENT

3. An examiner's amendment to the record appears below. Should the changes and/or additions be unacceptable to applicant, an amendment may be filed as provided by 37 CFR 1.312. To ensure consideration of such an amendment, it MUST be submitted no later than the payment of the issue fee.

Authorization for this examiner's amendment was given in an interview with Umar R. Bakhsh (Applicant's representative) on 9/07/2023.

The application has been amended as follows:

In the Claims:

Replace Claim 1, with the following:

A stroller system for supporting a front stroller seat and a rear stroller seat, the system comprising:

a pair of rear wheels;

a pair of front wheels;

a frame including a handle portion, a rear wheel support portion, a front wheel support portion, and a folding mechanism connecting the front wheel support portion and the handle portion in both an unfolded configuration and in a folded configuration,

wherein the frame includes a stroller seat support portion positioned at a first vertical position adjacent the handle portion, and wherein the front wheel support portion and the handle portion are parallel when the frame is in the unfolded configuration; and

a front seat attachment configured for attachment to the front wheel support portion at a second vertical position substantially lower than the first vertical position,

wherein the front seat attachment is configured to releasably connect to and support the front stroller seat in either a forward-facing configuration or a backward-facing configuration,

wherein the front seat attachment is configured to support the front stroller seat substantially over the front wheels so that a center of gravity of the stroller system is between the front wheels and the rear wheels;

wherein the rear wheel support portion extends diagonally relative to the front wheel support portion when the frame is in the unfolded configuration, and the rear wheel support portion is disposed adjacent to both the front wheel support portion and the handle portion when the frame is in the folded configuration; and

wherein the stroller seat support portion positioned at the first vertical position and the front seat attachment at the second vertical position create an inline descending configuration of the rear stroller seat and the front stroller seat.

Allowable Subject Matter

9. Claims 1-22 are allowed.

10. The following is an examiner's statement of reasons for allowance: The prior art of record when taken alone or in combination with another does not teach or fairly suggest at this time at least, among other limitations: A stroller system for supporting a front stroller seat and a rear stroller seat, the system comprising: a pair of rear wheels; a pair of front wheels; a frame including a handle portion, a rear wheel support portion, a front wheel support portion, and a folding mechanism connecting the front wheel support portion and the handle portion in both an unfolded configuration and in a folded configuration, wherein the frame includes a stroller seat support portion positioned at a first vertical position adjacent the handle portion, and wherein the front wheel support portion and the handle portion are parallel when the frame is in the unfolded configuration; and a front seat attachment configured for attachment to the front wheel support portion at a second vertical position substantially lower than the first vertical position, wherein the front seat attachment is configured to releasably connect to and support the front stroller seat in either a forward-facing configuration or a backward-facing configuration, wherein the front seat attachment is configured to support the front stroller seat substantially over the front wheels so that a center of gravity of the stroller system is between the front wheels and the rear wheels; wherein the rear wheel support portion extends diagonally relative to the front wheel support portion when the frame is in the unfolded configuration, and the rear wheel support portion is disposed adjacent to both the front wheel support portion and the handle portion when the frame is in the folded configuration; and wherein the stroller seat support portion positioned at the first

vertical position and the front seat attachment at the second vertical position create an inline descending configuration of the rear stroller seat and the front stroller seat, as claimed in amended Claim 1 (emphasis added to allowable limitations not suggested or taught by the prior art).

11. The prior art discloses similar examples of stroller seat systems (see attached Notice of References cited). However, the prior art does not appear to teach or fairly suggest the combination of limitations of amended independent claim 1 as noted above.

12. In particular, Cheng et al. (US Patent 7,475,900 B2) and Chen et al. (US Patent Pub 2010/0013281 A1) and the prior art fail to disclose inter alia: ***wherein the frame includes a stroller seat support portion positioned at a first vertical position adjacent the handle portion, and wherein the front wheel support portion and the handle are parallel when the frame is in the unfolded configuration; and a front seat attachment configured for attachment to the front wheel support portion at a second vertical position substantially lower than the first vertical position, and wherein the front seat attachment is configured to releasably connect to and support the front stroller seat in either a forward-facing configuration or a backward-facing configuration, and wherein the front seat attachment is configured to support the front stroller seat substantially over the front wheels so that a center of gravity of the stroller system is between the front wheels and the rear wheels; wherein the rear wheel support portion extends diagonally relative to the front wheel support portion when the frame is in the unfolded configuration, and the rear wheel support portion is disposed adjacent to both the front wheel support portion and the handle portion when the frame is in the folded***

configuration; and wherein the stroller seat support portion positioned at the first vertical position and the front seat attachment at the second vertical position create an inline descending configuration of the rear stroller seat and the front stroller seat, as claimed in amended Claim 1.

Any comments considered necessary by applicant must be submitted no later than the payment of the issue fee and, to avoid processing delays, should preferably accompany the issue fee. Such submissions should be clearly labeled "Comments on Statement of Reasons for Allowance."

Conclusion

13. The prior art made of record and not relied upon is considered pertinent to applicant's disclosure, and can be found on the attached Notice of References Cited.

14. Any inquiry concerning this communication or earlier communications from the examiner should be directed to JAMES M DOLAK whose telephone number is (571)270-7757. The examiner can normally be reached on 9-530 EST Monday-Friday.

Examiner interviews are available via telephone, in-person, and video conferencing using a USPTO supplied web-based collaboration tool. To schedule an interview, applicant is encouraged to use the USPTO Automated Interview Request (AIR) at http://www.uspto.gov/interviewpractice.

If attempts to reach the examiner by telephone are unsuccessful, the examiner's supervisor, J ALLEN SHRIVER can be reached on 303-297-4337. The fax phone number for the organization where this application or proceeding is assigned is 571-273-8300.

Information regarding the status of an application may be obtained from the Patent Application Information Retrieval (PAIR) system. Status information for published applications may be obtained from either Private PAIR or Public PAIR. Status information for unpublished applications is available through Private PAIR only. For more information about the PAIR system, see http://pair-direct.uspto.gov. Should you have questions on access to the Private PAIR system, contact the Electronic Business Center (EBC) at 866-217-9197 (toll-free). If you would like assistance from a USPTO Customer Service Representative or access to the automated information system, call 800-786-9199 (IN USA OR CANADA) or 571-272-1000.

/JAMES M DOLAK/
Primary Examiner, Art Unit 3618

Applicant-Initiated Interview Summary	**Application No.** 18/051,053	**Applicant(s)** Zehfuss, Mark	
	Examiner JAMES M DOLAK	**Art Unit** 3618	**AIA (FITF) Status** No

All participants (applicant, applicants representative, PTO personnel):

(1) JAMES M. DOLAK (Examiner). (3) _____.

(2) Umar R. Bakhsh (Applicant's representative). (4) _____.

Date of Interview: 07 September 2023.

Type: ☑ Telephonic ☐ Video Conference
☐ Personal [copy given to: ☐ applicant ☐ applicant's representative]

Exhibit shown or demonstration conducted: ☐ Yes ☑ No.
If Yes, brief description: _____.

Issues Discussed ☐101 ☐112 ☐102 ☐103 ☑Others
(For each of the checked box(es) above, please describe below the issue and detailed description of the discussion)

Claim(s) discussed: 1-22.

Identification of prior art discussed: n/a.

Substance of Interview
(For each issue discussed, provide a detailed description and indicate if agreement was reached. Some topics may include: identification or clarification of a reference or a portion thereof, claim interpretation, proposed amendments, arguments of any applied references etc...)

Discussed amendments to the claims to be made by the Examiner in order to put the application in condition for allowance for which agreement was reached with the Applicant..

Applicant recordation instructions: The formal written reply to the last Office action must include the substance of the interview. (See MPEP section 713.04). If a reply to the last Office action has already been filed, applicant is given a non-extendable period of the longer of one month or thirty days from this interview date, or the mailing date of this interview summary form, whichever is later, to file a statement of the substance of the interview.

Examiner recordation instructions: Examiners must summarize the substance of any interview of record. A complete and proper recordation of the substance of an interview should include the items listed in MPEP 713.04 for complete and proper recordation including the identification of the general thrust of each argument or issue discussed, a general indication of any other pertinent matters discussed regarding patentability and the general results or outcome of the interview, to include an indication as to whether or not agreement was reached on the issues raised.

☐ Attachment

/JAMES M DOLAK/ Primary Examiner, Art Unit 3618	

Summary of Record of Interview Requirements

Manual of Patent Examining Procedure (MPEP), Section 713.04, Substance of Interview Must be Made of Record
A complete written statement as to the substance of any face-to-face, video conference, or telephone interview with regard to an application must be made of record in the application whether or not an agreement with the examiner was reached at the interview.

Title 37 Code of Federal Regulations (CFR) 1.133 Interviews
Paragraph (b)

In every instance where reconsideration is requested in view of an interview with an examiner, a complete written statement of the reasons presented at the interview as warranting favorable action must be filed by the applicant. An interview does not remove the necessity for reply to Office action as specified in §§ 1.111, 1.135. (35 U.S.C. 132)

37 CFR §1.2 Business to be transacted in writing.
All business with the Patent or Trademark Office should be transacted in writing. The personal attendance of applicants or their attorneys or agents at the Patent and Trademark Office is unnecessary. The action of the Patent and Trademark Office will be based exclusively on the written record in the Office. No attention will be paid to any alleged oral promise, stipulation, or understanding in relation to which there is disagreement or doubt.

The action of the Patent and Trademark Office cannot be based exclusively on the written record in the Office if that record is itself incomplete through the failure to record the substance of interviews.

It is the responsibility of the applicant or the attorney or agent to make the substance of an interview of record in the application file, unless the examiner indicates he or she will do so. It is the examiners responsibility to see that such a record is made and to correct material inaccuracies which bear directly on the question of patentability.

Examiners must complete an Interview Summary Form for each interview held where a matter of substance has been discussed during the interview by checking the appropriate boxes and filling in the blanks. Discussions regarding only procedural matters, directed solely to restriction requirements for which interview recordation is otherwise provided for in Section 812.01 of the Manual of Patent Examining Procedure, or pointing out typographical errors or unreadable script in Office actions or the like, are excluded from the interview recordation procedures below. Where the substance of an interview is completely recorded in an Examiners Amendment, no separate Interview Summary Record is required.

The Interview Summary Form shall be given an appropriate Paper No., placed in the right hand portion of the file, and listed on the "Contents" section of the file wrapper. In a personal interview, a duplicate of the Form is given to the applicant (or attorney or agent) at the conclusion of the interview. In the case of a telephone or video-conference interview, the copy is mailed to the applicants correspondence address either with or prior to the next official communication. If additional correspondence from the examiner is not likely before an allowance or if other circumstances dictate, the Form should be mailed promptly after the interview rather than with the next official communication.

The Form provides for recordation of the following information:
- Application Number (Series Code and Serial Number)
- Name of applicant
- Name of examiner
- Date of interview
- Type of interview (telephonic, video-conference, or personal)
- Name of participant(s) (applicant, attorney or agent, examiner, other PTO personnel, etc.)
- An indication whether or not an exhibit was shown or a demonstration conducted
- An identification of the specific prior art discussed
- An indication whether an agreement was reached and if so, a description of the general nature of the agreement (may be by attachment of a copy of amendments or claims agreed as being allowable). Note: Agreement as to allowability is tentative and does not restrict further action by the examiner to the contrary.
- The signature of the examiner who conducted the interview (if Form is not an attachment to a signed Office action)

It is desirable that the examiner orally remind the applicant of his or her obligation to record the substance of the interview of each case. It should be noted, however, that the Interview Summary Form will not normally be considered a complete and proper recordation of the interview unless it includes, or is supplemented by the applicant or the examiner to include, all of the applicable items required below concerning the substance of the interview.

A complete and proper recordation of the substance of any interview should include at least the following applicable items:
1) A brief description of the nature of any exhibit shown or any demonstration conducted,-
2) an identification of the claims discussed,
3) an identification of the specific prior art discussed,
4) an identification of the principal proposed amendments of a substantive nature discussed, unless these are already described on the Interview Summary Form completed by the Examiner,
5) a brief identification of the general thrust of the principal arguments presented to the examiner,
   (The identification of arguments need not be lengthy or elaborate. A verbatim or highly detailed description of the arguments is not required. The identification of the arguments is sufficient if the general nature or thrust of the principal arguments made to the examiner can be understood in the context of the application file. Of course, the applicant may desire to emphasize and fully describe those arguments which he or she feels were or might be persuasive to the examiner.)
6) a general indication of any other pertinent matters discussed, and
7) if appropriate, the general results or outcome of the interview unless already described in the Interview Summary Form completed by the examiner.

Examiners are expected to carefully review the applicants record of the substance of an interview. If the record is not complete and accurate, the examiner will give the applicant an extendable one month time period to correct the record.

Examiner to Check for Accuracy

If the claims are allowable for other reasons of record, the examiner should send a letter setting forth the examiners version of the statement attributed to him or her. If the record is complete and accurate, the examiner should place the indication, Interview Record OK on the paper recording the substance of the interview along with the date and the examiners initials.

Notice of References Cited	Application/Control No. 18/051,053	Applicant(s)/Patent Under Reexamination Zehfuss, Mark	
	Examiner JAMES M DOLAK	Art Unit 3618	Page 1 of 2

U.S. PATENT DOCUMENTS

*		Document Number Country Code-Number-Kind Code	Date MM-YYYY	Name	CPC Classification	US Classification
*	A	US-9956979-B1	05-2018	Fernsten; Patrick	B62B9/005	1/1
*	B	US-9944305-B2	04-2018	Lee; Jon Hee	B62B7/006	1/1
*	C	US-9924806-B2	03-2018	Penello; Daniel	B62B9/12	1/1
*	D	US-9884640-B2	02-2018	Li; Jian-Qun	B62B7/08	1/1
*	E	US-9849903-B1	12-2017	Lai; Chin-I	B62B7/142	1/1
*	F	US-9840168-B2	12-2017	Yi; Ze-Hua	B62B7/142	1/1
*	G	US-10207731-B2	02-2019	Taylor; Andrew J.	B62B7/008	1/1
*	H	US-6209892-B1	04-2001	Schaaf; William Chester	B62B7/145	280/47.38
*	I	US-6286844-B1	09-2001	Cone, II; Richard E.	B62B9/28	280/658
*	J	US-7475900-B2	01-2009	Cheng; Huang-Yi	B62B7/08	280/47.38
*	K	US-D593459-S	06-2009	Liao; Gordon		D12/129
*	L	US-11370468-B2	06-2022	Young; David	B62B7/008	1/1
*	M	US-20100013281-A1	01-2010	Chen; Hung-Tsun	B62B9/12	297/243

FOREIGN PATENT DOCUMENTS

*		Document Number Country Code-Number-Kind Code	Date MM-YYYY	Country	Name	CPC Classification
	N					
	O					
	P					
	Q					
	R					
	S					
	T					

NON-PATENT DOCUMENTS

*		Include as applicable: Author, Title Date, Publisher, Edition or Volume, Pertinent Pages)
	U	
	V	
	W	
	X	

*A copy of this reference is not being furnished with this Office action. (See MPEP § 707.05(a).)
Dates in MM-YYYY format are publication dates. Classifications may be US or foreign.

Notice of References Cited	Application/Control No. 18/051,053	Applicant(s)/Patent Under Reexamination Zehfuss, Mark	
	Examiner JAMES M DOLAK	Art Unit 3618	Page 2 of 2

U.S. PATENT DOCUMENTS

*		Document Number Country Code-Number-Kind Code	Date MM-YYYY	Name	CPC Classification	US Classification
*	A	US-4216974-A	08-1980	Kassai; Kenzo	B62B7/062	280/42
*	B	US-4544178-A	10-1985	Al-Sheikh; Abdelraouf M.	B62B7/062	280/658
*	C	US-6102431-A	08-2000	Sutherland; Scott A.	B62B7/062	280/646
*	D	US-6102432-A	08-2000	Cheng; Pao-Hsien	B62B9/203	280/47.36
*	E	US-6991248-B2	01-2006	Valdez; Martin E.	B62B7/08	280/658
*	F	US-11731682-B2	08-2023	Lee; Jon Hee	B62B7/006	280/47.35
*	G	US-11577771-B2	02-2023	Zehfuss; Mark	B62B9/12	1/1
*	H	US-11505231-B1	11-2022	Zehfuss; Mark	B62K5/02	1/1
*	I	US-11731681-B2	08-2023	Eggert-Crowe; Colin F.	B62B9/26	280/47.38
*	J	US-11731680-B2	08-2023	Taylor; Andrew J.	B62B7/08	280/650
*	K	US-11654949-B2	05-2023	Taylor; Andrew J.	B60N2/28	280/650
	L					
	M					

FOREIGN PATENT DOCUMENTS

*		Document Number Country Code-Number-Kind Code	Date MM-YYYY	Country	Name	CPC Classification
	N					
	O					
	P					
	Q					
	R					
	S					
	T					

NON-PATENT DOCUMENTS

*		Include as applicable: Author, Title Date, Publisher, Edition or Volume, Pertinent Pages)
	U	
	V	
	W	
	X	

*A copy of this reference is not being furnished with this Office action. (See MPEP § 707.05(a).)
Dates in MM-YYYY format are publication dates. Classifications may be US or foreign.

Issue Classification	Application/Control No.	Applicant(s)/Patent Under Reexamination
	18/051,053	Zehfuss, Mark
	Examiner	**Art Unit**
	JAMES M DOLAK	3618

CPC						
Symbol					**Type**	**Version**
B62B	/	9	/	102	F	2013-01-01
B62B	/	7	/	006	I	2013-01-01
B62B	/	7	/	008	I	2013-01-01
B62B	/	7	/	14	I	2013-01-01
B62B	/	9	/	28	I	2013-01-01
B62K	/	27	/	003	I	2013-01-01
B62K	/	5	/	02	I	2013-01-01
B62M	/	1	/	38	I	2013-01-01
B62B	/	9	/	12	I	2013-01-01
B62B	/	7	/	145	A	2013-01-01
B62B	/	3	/	008	A	2013-01-01
B62K	/	13	/	00	A	2013-01-01

CPC Combination Sets								
Symbol					**Type**	**Set**	**Ranking**	**Version**
	/		/					

NONE (Assistant Examiner) (Date)		**Total Claims Allowed:** 22	
/JAMES M DOLAK/ Primary Examiner, Art Unit 3618 (Primary Examiner) (Date)	09 September 2023	O.G. Print Claim(s) 1	O.G. Print Figure 8A & 8B

U.S. Patent and Trademark Office Part of Paper No.: 20230907

Issue Classification	Application/Control No.	Applicant(s)/Patent Under Reexamination
	18/051,053	Zehfuss, Mark
	Examiner	**Art Unit**
	JAMES M DOLAK	3618

INTERNATIONAL CLASSIFICATION				
CLAIMED				
B62B	/	9	/	00

NON-CLAIMED				
	/		/	

US ORIGINAL CLASSIFICATION	
CLASS	**SUBCLASS**

CROSS REFERENCES(S)						
CLASS	**SUBCLASS (ONE SUBCLASS PER BLOCK)**					

NONE (Assistant Examiner) (Date)		**Total Claims Allowed:** 22	
/JAMES M DOLAK/ Primary Examiner, Art Unit 3618 (Primary Examiner) (Date)	09 September 2023	O.G. Print Claim(s) 1	O.G. Print Figure 8A & 8B

U.S. Patent and Trademark Office Part of Paper No.: 20230907

Issue Classification	Application/Control No.	Applicant(s)/Patent Under Reexamination
	18/051,053	Zehfuss, Mark
	Examiner	**Art Unit**
	JAMES M DOLAK	3618

☑ Claims renumbered in the same order as presented by applicant ☐ CPA ☐ T.D. ☐ R.1.47

CLAIMS

Final	Original	Final	Original	Final	Original	Final	Original	Final	Original	Final	Original	Final	Original	Final	Original

NONE		Total Claims Allowed:	
(Assistant Examiner)	(Date)	22	
/JAMES M DOLAK/ Primary Examiner, Art Unit 3618	09 September 2023	O.G. Print Claim(s)	O.G. Print Figure
(Primary Examiner)	(Date)	1	8A & 8B

U.S. Patent and Trademark Office

Part of Paper No.: 20230907

Index of Claims	Application/Control No.	Applicant(s)/Patent Under Reexamination
	18/051,053	Zehfuss, Mark
	Examiner	**Art Unit**
	JAMES M DOLAK	3618

✓	Rejected	-	Cancelled	N	Non-Elected	A	Appeal
=	Allowed	÷	Restricted	I	Interference	O	Objected

CLAIMS

☐ Claims renumbered in the same order as presented by applicant ☐ CPA ☐ T.D. ☐ R.1.47

CLAIM		DATE								
Final	Original	09/09/2023								
	1	=								
	2	=								
	3	=								
	4	=								
	5	=								
	6	=								
	7	=								
	8	=								
	9	=								
	10	=								
	11	=								
	12	=								
	13	=								
	14	=								
	15	=								
	16	=								
	17	=								
	18	=								
	19	=								
	20	=								
	21	=								
	22	=								

Search Notes	Application/Control No.	Applicant(s)/Patent Under Reexamination
	18/051,053	Zehfuss, Mark
	Examiner	**Art Unit**
	JAMES M DOLAK	3618

CPC - Searched*		
Symbol	**Date**	**Examiner**
B62B7/008,00,006,14,142,145	09/08/2023	JMD
B62B9/12,28,102	09/08/2023	JMD

CPC Combination Sets - Searched*		
Symbol	**Date**	**Examiner**

US Classification - Searched*			
Class	**Subclass**	**Date**	**Examiner**

* See search history printout included with this form or the SEARCH NOTES box below to determine the scope of the search.

Search Notes		
Search Notes	**Date**	**Examiner**
Inventor & Assignee Search	09/08/2023	JMD

Interference Search			
US Class/CPC Symbol	**US Subclass/CPC Group**	**Date**	**Examiner**
ALL	See attached Search History	09/09/2023	JMD

/JAMES M DOLAK/ Primary Examiner.Art Unit 3618	/JAMES M DOLAK/ Primary Examiner, Art Unit 3618

PE2E SEARCH - Search History (Prior Art)

Ref #	Hits	Search Query	DBs	Default Operator	Plurals	British Equivalents	Time Stamp
L1	0	("20100140902").PN.	(USPAT; USOCR)	OR	ON	ON	2011/11/10 05:53 PM
L2	1	("20100140902").PN.	(US-PGPUB; USPAT; USOCR)	OR	ON	ON	2011/11/10 05:55 PM
L3	4	(Zehfuss near2 Mark).in.	(US-PGPUB; USPAT; USOCR; FPRS; EPO; JPO; DERWENT)	OR	ON	ON	2012/06/21 11:03 AM
L4	8	("20030025304"|"20070001429"|"20070114738"|"5338096").PN.	(US-PGPUB; USPAT; USOCR; FPRS; EPO; JPO; DERWENT)	OR	ON	ON	2012/06/21 11:10 AM
L5	15	("3223431" | "3915493" | "3917312" | "4886209" | "5184835").PN. OR ("5338096").URPN.	(US-PGPUB; USPAT; USOCR)	OR	ON	ON	2012/06/21 11:19 AM
L6	1	("7320471").PN.	(US-PGPUB; USPAT; USOCR)	OR	ON	ON	2012/06/21 11:26 AM
L7	3	("5653460" | "6045145" | "6378892").PN. OR ("7320471").URPN.	(US-PGPUB; USPAT; USOCR)	OR	ON	ON	2012/06/21 11:26 AM
L8	2837	(280/650,657,647,648,658,639,642,643).CCLS.	(US-PGPUB; USPAT; USOCR)	OR	ON	ON	2012/06/27 03:43 PM
L9	37502244	@ad<="20081204"	(US-PGPUB; USPAT; USOCR; FPRS; EPO; JPO; DERWENT)	OR	ON	ON	2012/06/27 03:43 PM
L10	1861	L8 and L9	(US-PGPUB; USPAT; USOCR; FPRS; EPO; JPO; DERWENT)	OR	ON	ON	2012/06/27 03:44 PM
L11	1537	L10 and seat	(US-PGPUB; USPAT; USOCR; FPRS; EPO; JPO; DERWENT)	OR	ON	ON	2012/06/27 03:44 PM
L12	827	L10 and (seat same attach$4)	(US-PGPUB; USPAT; USOCR; FPRS; EPO; JPO; DERWENT)	OR	ON	ON	2012/06/27 03:44 PM
L13	427	L10 and (seat near2 attach$4)	(US-PGPUB; USPAT; USOCR; FPRS; EPO; JPO; DERWENT)	OR	ON	ON	2012/06/27 03:44 PM
L14	51	L10 and (seat near2 (attach$4 and convert$4))	(US-PGPUB; USPAT; USOCR; FPRS; EPO; JPO; DERWENT)	OR	ON	ON	2012/06/27 03:46 PM
L15	2446	(297/130,232,243,463.1).CCLS.	(US-PGPUB; USPAT; USOCR)	OR	ON	ON	2012/06/28 07:10 PM
L16	37502315	@ad<="20081204"	(US-PGPUB; USPAT; USOCR; FPRS; EPO; JPO; DERWENT)	OR	ON	ON	2012/06/28 07:17 PM
L17	1076	L15 and L16	(US-PGPUB; USPAT; USOCR; FPRS; EPO; JPO; DERWENT)	OR	ON	ON	2012/06/28 07:17 PM

L18	2837	(280/650,657,647,648,658,639,642,643).CCLS.	(US-PGPUB; USPAT; USOCR)	OR	ON	ON	2012/06/28 07:17 PM
L19	1861	L18 and L16	(US-PGPUB; USPAT; USOCR; FPRS; EPO; JPO; DERWENT)	OR	ON	ON	2012/06/28 07:17 PM
L20	35	L17 and L19	(US-PGPUB; USPAT; USOCR; FPRS; EPO; JPO; DERWENT)	OR	ON	ON	2012/06/28 07:17 PM
L21	2902	L17 or L19	(US-PGPUB; USPAT; USOCR; FPRS; EPO; JPO; DERWENT)	OR	ON	ON	2012/06/28 07:20 PM
L22	2446	(297/130,232,243,463.1).CCLS.	(US-PGPUB; USPAT; USOCR)	OR	ON	ON	2012/06/28 11:15 PM
L23	37502315	@ad<="20081204"	(US-PGPUB; USPAT; USOCR; FPRS; EPO; JPO; DERWENT)	OR	ON	ON	2012/06/28 11:15 PM
L24	1076	L22 and L23	(US-PGPUB; USPAT; USOCR; FPRS; EPO; JPO; DERWENT)	OR	ON	ON	2012/06/28 11:15 PM
L25	2837	(280/650,657,647,648,658,639,642,643).CCLS.	(US-PGPUB; USPAT; USOCR)	OR	ON	ON	2012/06/28 11:15 PM
L26	1861	L25 and L23	(US-PGPUB; USPAT; USOCR; FPRS; EPO; JPO; DERWENT)	OR	ON	ON	2012/06/28 11:15 PM
L27	2902	L24 or L26	(US-PGPUB; USPAT; USOCR; FPRS; EPO; JPO; DERWENT)	OR	ON	ON	2012/06/28 11:15 PM
L28	657	L27 and ((wheel and seat) same attach$4)	(US-PGPUB; USPAT; USOCR; FPRS; EPO; JPO; DERWENT)	OR	ON	ON	2012/06/28 11:15 PM
L29	1	("6209892").PN.	(US-PGPUB; USPAT; USOCR)	OR	ON	ON	2012/06/28 11:16 PM
L30	44	("3829113" | "4729572" | "4768795" | "4861105" | "5056865" | "5076599" | "5146656" | "5322343" | "5676386" | "5727798" | "5820144" | "5887889").PN. OR ("6209892").URPN.	(US-PGPUB; USPAT; USOCR)	OR	ON	ON	2012/06/28 11:16 PM
L31	115	L28 and expand$4	(US-PGPUB; USPAT; USOCR; FPRS; EPO; JPO; DERWENT)	OR	ON	ON	2012/06/28 11:20 PM
L32	58	("5564786"|"0733889"|"6443467"|"0329579"|"5611560"|"3235279"|"0292933"|"6017051"|"0781495"|"2305719"|"1707186"|"4989890"|"6220621"|"6676140"|"1168896"|"2517443"|"20030075903"|"0647165").PN.	(US-PGPUB; USPAT; USOCR; FPRS; EPO; JPO; DERWENT)	OR	ON	ON	2012/06/28 11:22 PM
L33	33	("2769482" | "2857953"	(US-PGPUB; USPAT;	OR	ON	ON	2012/06/28

		| "2993702" | "3235279" | "3309101" | "3330575" | "3738700" | "4725071" | "5018754" | "5263730" | "5338096" | "5417449" | "5653460" | "5664795" | "5911432" | "6045145" | "6068087" | "6378892" | "D321850" | "D359937").PN. OR ("6676140").URPN.	USOCR)				11:24 PM
L34	16	("1560802" | "5076579" | "5123670" | "5188389" | "5224720" | "5301963" | "5476275" | "5669624" | "5695208" | "6017051" | "6036220").PN. OR ("6443467").URPN.	(US-PGPUB; USPAT; USOCR)	OR	ON	ON	2012/06/28 11:25 PM
L35	15	("1707186").URPN.	(USPAT)	OR	ON	ON	2012/06/28 11:28 PM
L36	14	("20030111825" | "5333893" | "6209892" | "6513827" | "6863286" | "7032922" | "7367581" | "7377537" | "D429664" | "D430076").PN. OR ("7475900").URPN.	(US-PGPUB; USPAT; USOCR)	OR	ON	ON	2012/06/28 11:31 PM
L37	44	L31 and (wheel near2 remov$4)	(US-PGPUB; USPAT; USOCR; FPRS; EPO; JPO; DERWENT)	OR	ON	ON	2012/06/28 11:35 PM
L38	22	("3738600" | "3876046" | "4570956" | "4750783" | "5188389" | "5234224" | "5499831" | "5536027" | "5562300" | "5876046" | "6189914" | "6193263" | "6209892" | "6290290" | "6302412" | "6398233" | "6550802" | "D397316" | "D481975" | "D486427" | "D497844").PN. OR ("D508443").URPN.	(US-PGPUB; USPAT; USOCR)	OR	ON	ON	2012/06/28 11:36 PM
L39	20	("4725071" | "5221106" | "5338096" | "5522121" | "5918892" | "6209892" | "6267406" | "6527294" | "D296540").PN. OR ("6752405").URPN.	(US-PGPUB; USPAT; USOCR)	OR	ON	ON	2012/06/28 11:46 PM
L40	15	("0522608" | "1707186" | "3223431" | "3524655" | "3997180" | "4620686" | "4632409" | "4836573" | "6267406" | "6752405" | "7364183").PN. OR ("8157273").URPN.	(US-PGPUB; USPAT; USOCR)	OR	ON	ON	2012/06/28 11:48 PM

L41	30	("0556168" | "1707186" | "1934396" | "20020033588" | "20050167951" | "20070252352" | "20080143082" | "20090026733" | "3383738" | "4083579" | "4805938" | "5221106" | "5333893" | "5522121" | "5769448" | "5918892" | "6431579" | "6527294" | "6601866" | "6752405" | "7481439" | "7516966" | "7597332" | "D484075" | "D595621" | "D598333").PN. OR ("7896384").URPN.	(US-PGPUB; USPAT; USOCR)	OR	ON	ON	2012/06/28 11:49 PM
L42	13	("3000645" | "4969656" | "5125712" | "5522121" | "5918892" | "6527294" | "6561526" | "6715783" | "6752405" | "6851693" | "6938906").PN. OR ("7677585").URPN.	(US-PGPUB; USPAT; USOCR)	OR	ON	ON	2012/06/28 11:50 PM
L43	28	("0122730" | "0937625" | "1212221" | "20070114738" | "2836224" | "3000645" | "4288124" | "4779883" | "4805938" | "4863217" | "5312122" | "5622375" | "5653460" | "5704627" | "5848797" | "6378892" | "6530591" | "6746079" | "6851693" | "7226059" | "7481439" | "7597332" | "7677585").PN. OR ("8128103").URPN.	(US-PGPUB; USPAT; USOCR)	OR	ON	ON	2012/06/28 11:51 PM
L44	9	("3000645").URPN.	(USPAT)	OR	ON	ON	2012/06/28 11:55 PM
L45	1	("6702316").PN.	(US-PGPUB; USPAT; USOCR)	OR	ON	ON	2012/06/29 12:04 AM
L46	29	("20010040357" | "20020060444" | "20020093177" | "4852894" | "4921261" | "4989888" | "5490685" | "5641200" | "5676386" | "5794951" | "5947555" | "6189914" | "6209892" | "6241274" | "6286844" | "6302412" | "6331032" | "6398233" | "6409205").PN. OR ("6702316").URPN.	(US-PGPUB; USPAT; USOCR)	OR	ON	ON	2012/06/29 12:04 AM

L47	2446	(297/130,232,243,463.1).CCLS.	(US-PGPUB; USPAT; USOCR)	OR	ON	ON	2012/07/01 04:43 AM
L48	37502608	@ad<="20081204"	(US-PGPUB; USPAT; USOCR; FPRS; EPO; JPO; DERWENT)	OR	ON	ON	2012/07/01 04:43 AM
L49	1076	L47 and L48	(US-PGPUB; USPAT; USOCR; FPRS; EPO; JPO; DERWENT)	OR	ON	ON	2012/07/01 04:43 AM
L50	2837	(280/650,657,647,648,658,639,642,643).CCLS.	(US-PGPUB; USPAT; USOCR)	OR	ON	ON	2012/07/01 04:43 AM
L51	1861	L50 and L48	(US-PGPUB; USPAT; USOCR; FPRS; EPO; JPO; DERWENT)	OR	ON	ON	2012/07/01 04:43 AM
L52	2902	L49 or L51	(US-PGPUB; USPAT; USOCR; FPRS; EPO; JPO; DERWENT)	OR	ON	ON	2012/07/01 04:43 AM
L53	476	L52 and cylindrical	(US-PGPUB; USPAT; USOCR; FPRS; EPO; JPO; DERWENT)	OR	ON	ON	2012/07/01 04:43 AM
L54	21	L52 and cylindrical near2 connect$3	(US-PGPUB; USPAT; USOCR; FPRS; EPO; JPO; DERWENT)	OR	ON	ON	2012/07/01 05:05 AM
L55	29	("1506565" | "1885627" | "1954179" | "20040026895" | "20040164515" | "2220528" | "2334387" | "2482585" | "5395130" | "5454578" | "5501480" | "5536027" | "5904363" | "6022042" | "6331013" | "6443467" | "6443469" | "6685206" | "6685207" | "D327240" | "D405031" | "D486425").PN. OR ("7261308").URPN.	(US-PGPUB; USPAT; USOCR)	OR	ON	ON	2012/07/01 05:10 AM
L56	28	("0122730" | "0937625" | "1212221" | "20070114738" | "2836224" | "3000645" | "4288124" | "4779883" | "4805938" | "4863217" | "5312122" | "5622375" | "5653460" | "5704627" | "5848797" | "6378892" | "6530591" | "6746079" | "6851693" | "7226059" | "7481439" | "7597332" | "7677585").PN. OR ("8128103").URPN.	(US-PGPUB; USPAT; USOCR)	OR	ON	ON	2012/07/01 05:17 AM
L57	36	("1486118" | "2769482" | "2993702" | "3253860" | "3497234" | "3612603" | "4155588" | "4181356" | "4288124" | "4381870"	(US-PGPUB; USPAT; USOCR)	OR	ON	ON	2012/07/01 05:18 AM

		| "4596405" | "4632409" | "4711489" | "4813742" | "4946180" | "5161811" | "5201535" | "5213360" | "5374073" | "5401076" | "5547205" | "5848797" | "5988657" | "6135479" | "6276709" | "D340140").PN. OR ("6561526").URPN.					
L58	18	("2926880" | "3290050" | "3309101" | "4183580" | "4711489" | "4779883" | "5074616" | "5168601" | "5265931" | "5401076" | "5529325").PN. OR ("5704627").URPN.	(US-PGPUB; USPAT; USOCR)	OR	ON	ON	2012/07/01 05:21 AM
L59	23	("4542915" | "4854607" | "4986564" | "5033761").PN. OR ("5653460").URPN.	(US-PGPUB; USPAT; USOCR)	OR	ON	ON	2012/07/01 05:22 AM
L60	31	("2453631" | "2558372" | "4953887" | "5090724" | "5380262" | "5653460" | "5676386").PN. OR ("6155592").URPN.	(US-PGPUB; USPAT; USOCR)	OR	ON	ON	2012/07/01 05:25 AM
L61	5	("2453631").URPN.	(USPAT)	OR	ON	ON	2012/07/01 05:27 AM
L62	33	("0279778" | "1033324" | "2453631" | "3643292" | "3849834" | "3879146" | "4132429" | "4335900" | "4606550" | "4856809" | "4902027" | "4953880" | "5176395" | "5188389" | "5263730" | "5299825" | "5318318" | "5344171" | "5356171" | "5364119" | "5536027").PN. OR ("5647601").URPN.	(US-PGPUB; USPAT; USOCR)	OR	ON	ON	2012/07/01 05:28 AM
L63	5	("2453631").URPN.	(USPAT)	OR	ON	ON	2012/07/01 05:29 AM
L64	16	("1560802" | "5076579" | "5123670" | "5188389" | "5224720" | "5301963" | "5476275" | "5669624" | "5695208" | "6017051" | "6036220").PN. OR ("6443467").URPN.	(US-PGPUB; USPAT; USOCR)	OR	ON	ON	2012/07/01 05:33 AM
L65	1	("7677585").PN.	(US-PGPUB; USPAT; USOCR)	OR	ON	ON	2012/07/01 03:09 PM
L66	1	("6676140").PN.	(US-PGPUB; USPAT; USOCR)	OR	ON	ON	2012/07/01 04:02 PM
L67	1	("6443467").PN.	(US-PGPUB; USPAT; USOCR)	OR	ON	ON	2012/07/01 04:05 PM

L68	2	("1707186").PN.	(US-PGPUB; USPAT; USOCR)	OR	ON	ON	2012/07/01 04:05 PM
L69	1	("7475900").PN.	(US-PGPUB; USPAT; USOCR)	OR	ON	ON	2012/07/01 04:05 PM
L70	1	("6752405").PN.	(US-PGPUB; USPAT; USOCR)	OR	ON	ON	2012/07/01 04:14 PM
L71	1	("8157273").PN.	(US-PGPUB; USPAT; USOCR)	OR	ON	ON	2012/07/01 04:14 PM
L72	1	("7896384").PN.	(US-PGPUB; USPAT; USOCR)	OR	ON	ON	2012/07/01 04:15 PM
L73	1	("6561526").PN.	(US-PGPUB; USPAT; USOCR)	OR	ON	ON	2012/07/01 04:16 PM
L74	1	("5653460").PN.	(US-PGPUB; USPAT; USOCR)	OR	ON	ON	2012/07/01 04:17 PM
L75	2925	(280/650,657,647,648,658,639,642,643).CCLS.	(US-PGPUB; USPAT; USOCR)	OR	ON	ON	2013/02/13 05:32 PM
L76	37571828	@ad<="20081204"	(US-PGPUB; USPAT; USOCR; FPRS; EPO; JPO; DERWENT)	OR	ON	ON	2013/02/13 05:32 PM
L77	1873	L75 and L76	(US-PGPUB; USPAT; USOCR; FPRS; EPO; JPO; DERWENT)	OR	ON	ON	2013/02/13 05:32 PM
L78	2516	(297/130,232,243,463.1).CCLS.	(US-PGPUB; USPAT; USOCR)	OR	ON	ON	2013/02/13 05:35 PM
L79	35	L78 and L77	(US-PGPUB; USPAT; USOCR; FPRS; EPO; JPO; DERWENT)	OR	ON	ON	2013/02/13 05:36 PM
L80	1080	L78 and L76	(US-PGPUB; USPAT; USOCR; FPRS; EPO; JPO; DERWENT)	OR	ON	ON	2013/02/13 05:36 PM
L81	1	("20050082897").PN. OR ("8246020").URPN.	(US-PGPUB; USPAT; USOCR)	OR	ON	ON	2013/02/13 05:44 PM
L82	9	("20070085303" | "20080303232" | "20090033066" | "3784252" | "5257799" | "5794951" | "6086086" | "7367581" | "7377537").PN. OR ("8205906").URPN.	(US-PGPUB; USPAT; USOCR)	OR	ON	ON	2013/02/13 05:52 PM
L83	31	("20010002745" | "20030067138" | "20050099025" | "20060237932" | "20070063474" | "20080067776" | "20090026817" | "2450051" | "4754987" | "5076599" | "5267744" | "5454577" | "5474316" | "5577746" | "5921571" | "5947497" | "5979921" | "6196572" | "6663126" |	(US-PGPUB; USPAT; USOCR)	OR	ON	ON	2013/02/13 05:58 PM

		"6764087" | "6767028" | "6929274" | "6976697" | "7052026" | "7168761" | "7172206" | "7354058" | "7431324" | "7445222" | "7547029").PN. OR ("8262103").URPN.					
L84	22	("20080211206" | "20090014985" | "20090078482" | "3605929" | "4362311" | "4861058" | "5020624" | "5421598" | "5921338" | "6135222" | "6220382" | "6378642" | "6439331" | "6659488" | "6793248" | "7044249" | "7080847" | "7364182" | "7571926" | "7591479" | "7832755").PN. OR ("8336904").URPN.	(US-PGPUB; USPAT; USOCR)	OR	ON	ON	2013/02/13 06:03 PM
L85	1	("8251382").PN.	(US-PGPUB; USPAT; USOCR)	OR	ON	ON	2013/02/14 03:15 PM
L86	34	("20080150247" | "20080179848" | "20080224451" | "20080303232" | "20090102162" | "20090121455" | "20090256323" | "20100001492" | "20100109272" | "20100127480" | "4645371" | "5028061" | "5257799" | "5364137" | "5676386" | "5772279" | "5865447" | "5947555" | "6286844" | "6446990" | "6513827" | "6991248" | "7032922" | "7296820" | "7314247" | "7367581" | "7377537" | "7584985" | "7658399" | "7681894" | "7686323" | "7694996" | "7712765" | "7753398").PN. OR ("8251382").URPN.	(US-PGPUB; USPAT; USOCR)	OR	ON	ON	2013/02/14 03:19 PM
L87	32	("4836573" | "4892327" | "5028061" | "5069474" | "5257799" | "5460430" | "5887935" | "5921574" | "6099022" | "6523853" | "6594840" | "6739649" | "7281732").PN. OR ("7377537").URPN.	(US-PGPUB; USPAT; USOCR)	OR	ON	ON	2013/02/14 05:50 PM
L88	57	("20020093177" |	(US-PGPUB; USPAT;	OR	ON	ON	2013/02/14

		"20020109320" | "20030075903" | "20030080536" | "20030111825" | "20040032103" | "20040094922" | "20040124610" | "20040124611" | "20040245747" | "20050093259" | "20050127640" | "20050242535" | "20050242549" | "20060119079" | "20070001429" | "20070108710" | "20070194545" | "20080157491" | "20090127827" | "5333893" | "5676386" | "5772279" | "5794951" | "5833261" | "5947555" | "6086087" | "6209892" | "6286844" | "6331032" | "6398233" | "6409205" | "6513827" | "6530591" | "6626452" | "6641164" | "6702316" | "6793280" | "6802514" | "6863286" | "6893031" | "6923467" | "6983986" | "6986518" | "7017921" | "7032922" | "7070197" | "7370913" | "7377537" | "7419181" | "7445229" | "7475900" | "7513512" | "7600775" | "7614641" | "7938435" | "D430076").PN. OR ("8328208").URPN.	USOCR)				05:52 PM
L89	3003	(280/650,657,647,648,658,639,642,643).CCLS.	(US-PGPUB; USPAT; USOCR)	OR	ON	ON	2013/07/16 03:09 PM
L90	37602504	@ad<="20081204"	(US-PGPUB; USPAT; USOCR; FPRS; EPO; JPO; DERWENT)	OR	ON	ON	2013/07/16 03:09 PM
L91	1876	L89 and L90	(US-PGPUB; USPAT; USOCR; FPRS; EPO; JPO; DERWENT)	OR	ON	ON	2013/07/16 03:09 PM
L92	2544	(297/130,232,243,463.1).CCLS.	(US-PGPUB; USPAT; USOCR)	OR	ON	ON	2013/07/16 03:11 PM
L93	1082	L92 and L90	(US-PGPUB; USPAT; USOCR; FPRS; EPO; JPO; DERWENT)	OR	ON	ON	2013/07/16 03:11 PM
L94	51	(US-20100052277-$ or US-20070114738-$ or US-20070001429-$ or US-20060290107-$ or	(US-PGPUB; USPAT; USOCR)	OR	ON	ON	2013/07/23 03:10 PM

		US-20030075903-$ or US-20100140902-$ or US-20080303232-$ or US-20070085303-$).did. or (US-5338096-$ or US-6045145-$ or US-3223431-$ or US-6378892-$ or US-5653460-$ or US-6209892-$ or US-5201535-$ or US-4620711-$ or US-6676140-$ or US-6017051-$ or US-1707186-$ or US-7475900-$ or US-7938435-$ or US-D508443-$ or US-7497461-$ or US-4570956-$ or US-6923467-$ or US-6752405-$ or US-8157273-$ or US-7896384-$ or US-7677585-$ or US-8128103-$ or US-7597332-$ or US-7481439-$ or US-6851693-$ or US-5848797-$).did. or (US-3000645-$ or US-8070180-$ or US-7832755-$ or US-7261308-$ or US-5704627-$ or US-5794951-$ or US-5647601-$ or US-2453631-$ or US-6443467-$ or US-8205906-$ or US-8262103-$ or US-8336904-$ or US-8371606-$ or US-8251382-$ or US-7377537-$).did. or (US-3000645-$ or US-2453631-$).did.					
L95	26	("20060131841"|"20070069505"|"20070210560"|"20080012268"|"20080224450"|"20080224451"|"20090160162"|"20100171289"|"20100201103"|"5947555"|"6045145"|"6270111"|"6331032"|"6715783"|"7032922"|"7367581"|"7475900"|"7677585"|"7753398"|"77	(US-PGPUB; USPAT; USOCR)	OR	ON	ON	2013/07/23 03:16 PM

		75532"|"7798500"|"7938435"|"8061732"|"8128119"|"8157273"|"8205906").PN.					
L96	1	("8240700").PN.	(US-PGPUB; USPAT; USOCR)	OR	OFF	OFF	2013/07/23 03:17 PM
L97	231	("1598778" | "1709527" | "20050012306" | "20050242549" | "20060001226" | "20060131840" | "20060131841" | "20060152059" | "20060157945" | "20060219374" | "20060261576" | "20090127827" | "20090127828" | "20090243260" | "20100038886" | "2616719" | "2783053" | "3112042" | "3168330" | "3227484" | "3390893" | "3459435" | "3504926" | "3556546" | "3561787" | "3653681" | "3799567" | "3989295" | "4007947" | "4023825" | "4046401" | "4111454" | "4126331" | "4191397" | "4232897" | "4248443" | "4317581" | "4322093" | "4335900" | "4362315" | "4365819" | "4378946" | "4412688" | "4415180" | "4513974" | "4542915" | "4564212" | "4591176" | "4602395" | "4606550" | "4610460" | "4632420" | "4632421" | "4660850" | "4706986" | "4733882" | "4741056" | "4741551" | "4763911" | "4763919" | "4768795" | "4770437" | "4805928" | "4807928" | "4817982" | "4819958" | "4832361" | "4856809" | "4886289" | "4892327" | "4906017" | "4907818" | "4924725" | "4930697" | "4953887" | "4968092" | "5028061" | "5056805" | "5074575" | "5087066" | "5110150" | "5143398" | "5181735" | "5184835" | "5201535" | "5205577" | "5205579" | "5238292" | "5244228" |	(US-PGPUB; USPAT; USOCR)	OR	ON	ON	2013/07/23 03:17 PM

		"5246272" | "5257799" | "5362089" | "5388852" | "5398951" | "5417449" | "5417450" | "5427402" | "5431478" | "5437493" | "5441163" | "5454584" | "5460395" | "5460398" | "5472224" | "5478102" | "5489138" | "5511259" | "5511441" | "5524503" | "5527090" | "5605409" | "5622377" | "5645293" | "5649737" | "5664795" | "5669623" | "5669624" | "5669625" | "5676386" | "5718444").PN. OR ("5722682" | "5727798" | "5741021" | "5752738" | "5765855" | "5765856" | "5769447" | "5772235" | "5775718" | "5795091" | "5810432" | "5845666" | "5845924" | "5876057" | "5887935" | "5921571" | "5934757" | "5938229" | "5947555" | "5979928" | "5984332" | "5988669" | "5988670" | "6068284" | "6070890" | "6099022" | "6102431" | "6116624" | "6129373" | "6139046" | "6152476" | "6155740" | "6189914" | "6193263" | "6209829" | "6273451" | "6286844" | "6296004" | "6299194" | "6302613" | "6339862" | "6368006" | "6398233" | "6409205" | "6412809" | "6443261" | "6443479" | "6446990" | "6467739" | "6478327" | "6557871" | "6557885" | "6572134" | "6581957" | "6666473" | "6851700" | "7017921" | "7017937" | "7032922" | "7044497" | "7185909" | "7188858" | "7281732" | "7338122" | "7445229" | "7445230" | "7621431" | "7686322" | "7871100" | "D308656" | "D310645" | "D317280" | "D320370" | "D337257" | "D352017" | "D357439" | "D357440" | "D412142" | "D415075" | "D419113" |					

		"D421940" | "D427822" | "D431212" | "D431213" | "D452192" | "D470803" | "D473663" | "D480195" | "D494511" | "D521422" | "D545074" | "D558648" | "D566629" | "D593272" | "D604151" | "D617255" | "D630934" | "D636300").PN. OR ("8240700").URPN.					
L98	1	("8186705").PN.	(US-PGPUB; USPAT; USOCR)	OR	ON	ON	2013/07/23 04:51 PM
L99	236	("1598778" | "1709527" | "20050012306" | "20050242549" | "20060001226" | "20060131840" | "20060131841" | "20060152059" | "20060157945" | "20060219374" | "20060261576" | "20090127827" | "20090127828" | "20090243260" | "20100171289" | "2616719" | "2783053" | "3112042" | "3168330" | "3227484" | "3390893" | "3459435" | "3504926" | "3556546" | "3561787" | "3653681" | "3784252" | "3799567" | "3989295" | "4007947" | "4023825" | "4046401" | "4111454" | "4126331" | "4191397" | "4232897" | "4248443" | "4317581" | "4322093" | "4335900" | "4362315" | "4365819" | "4378946" | "4412688" | "4415180" | "4513974" | "4542915" | "4564212" | "4591176" | "4602395" | "4606550" | "4610460" | "4632420" | "4632421" | "4660850" | "4706986" | "4733882" | "4741056" | "4741551" | "4763911" | "4763919" | "4768795" | "4770437" | "4805928" | "4807928" | "4817982" | "4819958" | "4832361" | "4856809" | "4886289" | "4892327" |	(US-PGPUB; USPAT; USOCR)	OR	ON	ON	2013/07/23 04:56 PM

		"4906017" | "4907818" | "4924725" | "4930697" | "4953887" | "4968092" | "5028061" | "5056805" | "5074575" | "5087066" | "5110150" | "5143398" | "5181735" | "5184835" | "5201535" | "5205577" | "5205579" | "5238292" | "5244228" | "5246272" | "5257799" | "5362089" | "5388852" | "5398951" | "5417449" | "5417450" | "5427402" | "5431478" | "5437493" | "5441163" | "5454584" | "5460395" | "5460398" | "5472224" | "5478102" | "5489138" | "5511259" | "5511441" | "5524503" | "5527090" | "5605409" | "5622377" | "5645293" | "5649737" | "5664795" | "5669623" | "5669624" | "5669625" | "5676386").PN. OR ("5718444" | "5722682" | "5727798" | "5741021" | "5752738" | "5765855" | "5765856" | "5769447" | "5772235" | "5775718" | "5795091" | "5810432" | "5845666" | "5845924" | "5876057" | "5887935" | "5921571" | "5934757" | "5938229" | "5947555" | "5979928" | "5984332" | "5988669" | "5988670" | "6068284" | "6070890" | "6099022" | "6102431" | "6116624" | "6129373" | "6139046" | "6152476" | "6155740" | "6189914" | "6193263" | "6209829" | "6273451" | "6286844" | "6296004" | "6299194" | "6302613" | "6339862" | "6368006" | "6398233" | "6409205" | "6412809" | "6443261" | "6443479" | "6446990" | "6467739" | "6478327" | "6557871" | "6557885" | "6572134" | "6581957" | "6666473" | "6851700" | "7017921" | "7017937" | "7032922" | "7044497" | "7185909" | "7188858" | "7281732" | "7338122" | "7445229"					

		| "7445230" | "7475900" | "7621431" | "7658399" | "7686322" | "7871100" | "7938435" | "8033555" | "D308656" | "D310645" | "D317280" | "D320370" | "D337257" | "D352017" | "D357439" | "D357440" | "D412142" | "D415075" | "D419113" | "D421940" | "D427822" | "D431212" | "D431213" | "D452192" | "D470803" | "D473663" | "D480195" | "D494511" | "D521422" | "D545074" | "D558648" | "D566629" | "D593272" | "D604151" | "D617255" | "D630934" | "D636300").PN. OR ("8186705").URPN.					
L100	17	("20060001226"|"6099022"|"5121940"|"6502901"|"6530591"|"6641164"|"20060157945"|"6193263"|"6626452"|"20060152059"|"4365819"|"6209829"|"6398233"|"6877761"|"7070197"|"20060131841"|"7320471").PN.	(US-PGPUB; USPAT; USOCR)	OR	ON	ON	2013/07/23 05:08 PM
L101	2	("4953667"|"4257729"). PN.	(US-PGPUB; USPAT; USOCR)	OR	ON	ON	2013/07/24 01:00 PM
L102	1	("6168174").PN.	(US-PGPUB; USPAT; USOCR)	OR	ON	ON	2013/07/24 01:04 PM
L103	1	("6209892").PN.	(US-PGPUB; USPAT; USOCR)	OR	ON	ON	2013/07/24 01:04 PM
L104	1	("6296260").PN.	(US-PGPUB; USPAT; USOCR)	OR	ON	ON	2013/07/24 01:18 PM
L105	1	("6203053").PN.	(US-PGPUB; USPAT; USOCR)	OR	ON	ON	2013/07/24 01:19 PM
L106	1	("4681330").PN.	(US-PGPUB; USPAT; USOCR)	OR	ON	ON	2013/07/24 01:20 PM
L107	1	("5685552").PN.	(US-PGPUB; USPAT; USOCR)	OR	ON	ON	2013/07/24 01:21 PM
L108	1	("5984326").PN.	(US-PGPUB; USPAT; USOCR)	OR	ON	ON	2013/07/24 01:21 PM
L109	1	("6168174").PN.	(US-PGPUB; USPAT; USOCR)	OR	ON	ON	2013/07/24 01:22 PM
L110	1	("6209892").PN.	(US-PGPUB; USPAT;	OR	ON	ON	2013/07/24

			USOCR)				01:22 PM
L111	6	("5653460" | "6045145" | "6378892").PN. OR ("7320471").URPN.	(US-PGPUB; USPAT; USOCR)	OR	ON	ON	2013/07/24 01:25 PM
L112	23	("4657269" | "4836573" | "5184835" | "5338096" | "5664795" | "5911432").PN. OR ("6045145").URPN.	(US-PGPUB; USPAT; USOCR)	OR	ON	ON	2013/07/24 01:26 PM
L113	53	("20030192925" | "20050072821" | "2907372" | "3079162" | "3248125" | "3627342" | "3961803" | "3967833" | "4032173" | "4113306" | "4181356" | "4220351" | "4231587" | "4239259" | "4256325" | "4412688" | "4620711" | "4681340" | "4762256" | "4844504" | "4892327" | "5230523" | "5333769" | "5398951" | "5411729" | "5431478" | "5468009" | "5478096" | "5662339" | "5806924" | "5829826" | "5964470" | "5987665" | "6045145" | "6231056" | "6250654" | "6375213" | "6811178" | "6910696" | "D254610" | "D345720" | "D358058" | "D365925" | "D402235" | "D508443").PN. OR ("7497461").URPN.	(US-PGPUB; USPAT; USOCR)	OR	ON	ON	2013/07/24 04:08 PM
L114	22	("3738600" | "3876046" | "4570956" | "4750783" | "5188389" | "5234224" | "5499831" | "5536027" | "5562300" | "5876046" | "6189914" | "6193263" | "6209892" | "6290290" | "6302412" | "6398233" | "6550802" | "D397316" | "D481975" | "D486427" | "D497844").PN. OR ("D508443").URPN.	(US-PGPUB; USPAT; USOCR)	OR	ON	ON	2013/07/24 04:13 PM
L115	26	("4790548" | "5060967" | "5366274" | "5727848" | "5975225" | "6203054" | "6513827" | "7234722").PN. OR ("7367581").URPN.	(US-PGPUB; USPAT; USOCR)	OR	ON	ON	2013/07/24 06:30 PM
L116	23	("4657269" | "4836573" | "5184835" | "5338096"	(US-PGPUB; USPAT; USOCR)	OR	ON	ON	2013/07/24 06:39 PM

		| "5664795" | "5911432").PN. OR ("6045145").URPN.					
L117	55	("4736959" | "4743063" | "4872692" | "4878680" | "5201535" | "5676386").PN. OR ("5947555").URPN.	(US-PGPUB; USPAT; USOCR)	OR	ON	ON	2013/07/25 10:09 AM
L118	25	("20010040357" | "20020093177" | "20030075903" | "4921261" | "4989888" | "5676386" | "5794951" | "5947555" | "6189914" | "6209892" | "6241274" | "6286844" | "6302412" | "6331032" | "6398233" | "6409205" | "6641164" | "6702316").PN. OR ("6923467").URPN.	(US-PGPUB; USPAT; USOCR)	OR	ON	ON	2013/07/25 11:03 AM
L119	25	("4570956" | "4836573" | "4921261" | "4946180" | "5121940" | "5188380" | "5676386" | "5772279" | "5947555" | "6070890" | "6155592" | "6286844" | "6398233" | "6409205" | "6478327" | "D345720").PN. OR ("6641164").URPN.	(US-PGPUB; USPAT; USOCR)	OR	ON	ON	2013/07/25 11:28 AM
L120	2	("3000645").PN.	(US-PGPUB; USPAT; USOCR)	OR	ON	ON	2013/07/25 03:26 PM
L121	9	("3000645").URPN.	(USPAT)	OR	ON	ON	2013/07/25 03:27 PM
L122	29	("0122730" | "0937625" | "1212221" | "20070114738" | "2836224" | "3000645" | "4288124" | "4779883" | "4805938" | "4863217" | "5312122" | "5622375" | "5653460" | "5704627" | "5848797" | "6378892" | "6530591" | "6746079" | "6851693" | "7226059" | "7481439" | "7597332" | "7677585").PN. OR ("8128103").URPN.	(US-PGPUB; USPAT; USOCR)	OR	ON	ON	2013/07/25 03:29 PM
L123	1	("8029007").PN.	(US-PGPUB; USPAT; USOCR)	OR	OFF	OFF	2013/07/25 03:30 PM
L124	28	("20010033069" | "20020135142" | "20030025304" | "20030127835" | "20040164510" |	(US-PGPUB; USPAT; USOCR)	OR	ON	ON	2013/07/25 03:31 PM

		"20070090619" | "5463853" | "5622375" | "5625923" | "5725238" | "5882022" | "5909887" | "5967190" | "6098492" | "6422634" | "6447001" | "6453921" | "6530591" | "6540238" | "6557878" | "6698772" | "6827356" | "6893028" | "7159829" | "7290776").PN. OR ("8029007").URPN.					
L125	1	("6851693").PN.	(US-PGPUB; USPAT; USOCR)	OR	ON	ON	2013/07/25 03:34 PM
L126	14	("3887208" | "5064209" | "5067738" | "5269548" | "5421597" | "5470088" | "5513868" | "5785335").PN. OR ("6851693").URPN.	(US-PGPUB; USPAT; USOCR)	OR	ON	ON	2013/07/25 03:35 PM
L127	6	("2001/0033069").URPN.	(USPAT)	OR	ON	ON	2013/07/25 03:36 PM
L128	28	("1876963" | "20010033069" | "20020089136" | "20040075230" | "20040173989" | "20060261575" | "20100201089" | "2859975" | "3069182" | "4190261" | "4239248" | "4323258" | "4336952" | "4359231" | "5624128" | "5931244" | "6203053" | "6485039" | "6517092" | "6572130" | "6626446" | "7073822" | "7377527" | "7549655" | "7699325").PN. OR ("8146926").URPN.	(US-PGPUB; USPAT; USOCR)	OR	ON	ON	2013/07/25 03:37 PM
L129	1	("7249779").PN.	(US-PGPUB; USPAT; USOCR)	OR	ON	ON	2013/07/25 03:38 PM
L130	57	("1218943" | "1347384" | "1408729" | "1560288" | "20010035626" | "20030151225" | "2305719" | "2435733" | "2468933" | "2798727" | "3314494" | "3738700" | "3954283" | "4015297" | "4825484" | "4958842" | "5125674" | "5190306" | "5558357" | "5562300" | "5590896" | "5692760" | "5709400" | "5820146" | "5884922" | "5975551" |	(US-PGPUB; USPAT; USOCR)	OR	ON	ON	2013/07/25 03:38 PM

		"6164666" | "6231056" | "6237995" | "6340168" | "6409190" | "6460866" | "6595536" | "6601862" | "6623023" | "6676140" | "6688614" | "7029015").PN. OR ("7249779").URPN.					
L131	60	(US-20100052277-$ or US-20070114738-$ or US-20070001429-$ or US-20060290107-$ or US-20030075903-$ or US-20080303232-$ or US-20070085303-$ or US-20060131841-$ or US-20060001226-$ or US-20080224451-$ or US-20010033069-$).did. or (US-5338096-$ or US-6045145-$ or US-3223431-$ or US-6378892-$ or US-5653460-$ or US-6209892-$ or US-5201535-$ or US-4620711-$ or US-6676140-$ or US-6017051-$ or US-1707186-$ or US-7475900-$ or US-7938435-$ or US-D508443-$ or US-7497461-$ or US-4570956-$ or US-6923467-$ or US-6752405-$ or US-8157273-$ or US-7896384-$ or US-7677585-$ or US-8128103-$ or US-7597332-$ or US-7481439-$ or US-6851693-$ or US-5848797-$).did. or (US-3000645-$ or US-8070180-$ or US-7832755-$ or US-7261308-$ or US-5704627-$ or US-5794951-$ or US-5647601-$ or US-2453631-$ or US-6443467-$ or US-8205906-$ or US-8262103-$ or US-8336904-$ or US-8371606-$ or US-	(US-PGPUB; USPAT; USOCR)	OR	ON	ON	2013/07/25 04:59 PM

		8251382-$ or US-7377537-$ or US-7320471-$ or US-7032922-$ or US-7367581-$ or US-8029007-$ or US-7699325-$ or US-6827356-$).did. or (US-3000645-$ or US-2453631-$).did.					
L132	7295614	@ad<="20081204"	(US-PGPUB; USPAT; USOCR)	OR	ON	ON	2014/01/29 06:38 PM
L133	2588	(297/130,232,243,463.1).CCLS.	(US-PGPUB; USPAT; USOCR)	OR	ON	ON	2014/01/29 06:38 PM
L134	3082	(280/650,657,647,648,658,639,642,643).CCLS.	(US-PGPUB; USPAT; USOCR)	OR	ON	ON	2014/01/29 06:38 PM
L135	1082	L132 and L133	(US-PGPUB; USPAT; USOCR; FPRS; EPO; JPO; DERWENT)	OR	ON	ON	2014/01/29 06:39 PM
L136	1877	L132 and L134	(US-PGPUB; USPAT; USOCR; FPRS; EPO; JPO; DERWENT)	OR	ON	ON	2014/01/29 06:39 PM
L137	5616	L133 or L134	(US-PGPUB; USPAT; USOCR; FPRS; EPO; JPO; DERWENT)	OR	ON	ON	2014/01/29 06:41 PM
L138	2924	L132 and L137	(US-PGPUB; USPAT; USOCR; FPRS; EPO; JPO; DERWENT)	OR	ON	ON	2014/01/29 06:41 PM
L139	1012	L138 and stroller	(US-PGPUB; USPAT; USOCR; FPRS; EPO; JPO; DERWENT)	OR	ON	ON	2014/01/29 06:41 PM
L140	901	L139 and seat$3	(US-PGPUB; USPAT; USOCR; FPRS; EPO; JPO; DERWENT)	OR	ON	ON	2014/01/29 06:41 PM
L141	757	L140 and (insert$4 or attach$4 or detach$4)	(US-PGPUB; USPAT; USOCR; FPRS; EPO; JPO; DERWENT)	OR	ON	ON	2014/01/29 06:42 PM
L142	107	L141 and ((double or tandem) same stroller)	(US-PGPUB; USPAT; USOCR; FPRS; EPO; JPO; DERWENT)	OR	ON	ON	2014/01/29 06:42 PM
L143	1	("5816367").PN.	(US-PGPUB; USPAT; USOCR)	OR	ON	ON	2014/01/30 09:23 AM
L144	3	("2006/0290107").URPN.	(USPAT)	OR	ON	ON	2014/01/30 02:24 PM
L145	78	("20030020259" | "20030227157" | "20060290107" | "20070001429" | "20070085303" | "20070222167" | "20070296182" | "20080073877" | "20080150247" |	(US-PGPUB; USPAT; USOCR)	OR	ON	ON	2014/01/30 02:26 PM

		"20090039620" | "20100038886" | "20100038887" | "20100072732" | "20100078916" | "20100109292" | "20100140902" | "20100282800" | "20120153583" | "2769482" | "2798733" | "2857953" | "2993702" | "3235279" | "3309101" | "4542915" | "4725071" | "4858947" | "5018754" | "5167425" | "5184835" | "5263730" | "5333893" | "5338096" | "5417449" | "5653460" | "5664795" | "5722682" | "5911432" | "6045145" | "6086087" | "6209892" | "6267406" | "6378892" | "6497424" | "6585284" | "6676140" | "6702316" | "6843498" | "6877761" | "6935652" | "6979017" | "7320471" | "7451999" | "7938433" | "8070179" | "8157273" | "8186705" | "8205894" | "D311363" | "D321850" | "D328047" | "D359937" | "D375706" | "D429664" | "D430076" | "D431212" | "D455679" | "D587635" | "D614540" | "D616337" | "D616338" | "D636300").PN. OR ("8371606").URPN.					
L146	8	("2010/0078916").URPN.	(USPAT)	OR	ON	ON	2014/01/30 02:27 PM
L147	8	("20070096438" | "20100025968" | "20100078916" | "6422586" | "7401803" | "7441794" | "7632035" | "7766366").PN. OR ("8596669").URPN.	(US-PGPUB; USPAT; USOCR)	OR	ON	ON	2014/01/30 02:27 PM
L148	1	("8157273").PN.	(US-PGPUB; USPAT; USOCR)	OR	ON	ON	2014/01/30 04:20 PM
L149	18	("0522608" | "1707186" | "3223431" | "3524655" | "3997180" | "4620686" | "4632409" | "4836573" | "6267406" | "6752405" | "7364183").PN. OR	(US-PGPUB; USPAT; USOCR)	OR	ON	ON	2014/01/30 04:21 PM

		("8157273").URPN.					
L150	1	("5338096").PN.	(US-PGPUB; USPAT; USOCR)	OR	ON	ON	2014/01/30 04:23 PM
L151	19	("3223431" | "3915493" | "3917312" | "4886209" | "5184835").PN. OR ("5338096").URPN.	(US-PGPUB; USPAT; USOCR)	OR	ON	ON	2014/01/30 04:24 PM
L152	23	("4657269" | "4836573" | "5184835" | "5338096" | "5664795" | "5911432").PN. OR ("6045145").URPN.	(US-PGPUB; USPAT; USOCR)	OR	ON	ON	2014/01/30 05:17 PM
L153	53	("20030192925" | "20050072821" | "2907372" | "3079162" | "3248125" | "3627342" | "3961803" | "3967833" | "4032173" | "4113306" | "4181356" | "4220351" | "4231587" | "4239259" | "4256325" | "4412688" | "4620711" | "4681340" | "4762256" | "4844504" | "4892327" | "5230523" | "5333769" | "5398951" | "5411729" | "5431478" | "5468009" | "5478096" | "5662339" | "5806924" | "5829826" | "5964470" | "5987665" | "6045145" | "6231056" | "6250654" | "6375213" | "6811178" | "6910696" | "D254610" | "D345720" | "D358058" | "D365925" | "D402235" | "D508443").PN. OR ("7497461").URPN.	(US-PGPUB; USPAT; USOCR)	OR	ON	ON	2014/01/30 05:56 PM
L154	6	("5653460" | "6045145" | "6378892").PN. OR ("7320471").URPN.	(US-PGPUB; USPAT; USOCR)	OR	ON	ON	2014/01/30 06:00 PM
L155	23	("20010013689" | "20040032103" | "20040094923" | "20070057486" | "20080012268" | "20080231022" | "20090127827" | "20090243260" | "20090295128" | "4398748" | "4836573" | "6446990" | "6478327" | "6572134" | "7497461" | "7513512" | "7658399" | "7686322" | "7712765" | "7775532" | "7832755" |	(US-PGPUB; USPAT; USOCR)	OR	ON	ON	2014/01/31 10:54 AM

		"7878527" | "7938435").PN. OR ("8231136").URPN.					
L156	2	("2008/0231022").URPN.	(USPAT)	OR	ON	ON	2014/01/31 12:58 PM
L157	14	("20040094923" | "20070057486" | "20080012268" | "20080231022" | "20090127827" | "20090243261" | "20120098219" | "4398748" | "4836573" | "6446990" | "6478321" | "6478327" | "6572134" | "7712765").PN. OR ("8458880").URPN.	(US-PGPUB; USPAT; USOCR)	OR	ON	ON	2014/01/31 12:59 PM
L158	1	("7938435").PN.	(US-PGPUB; USPAT; USOCR)	OR	ON	ON	2014/01/31 01:26 PM
L159	34	("4157839" | "5558357" | "5676386" | "5772279" | "5794951" | "5863061" | "5865447" | "5876046" | "5947555" | "6241274" | "6286844" | "6331032" | "6409205" | "6428034" | "6478327" | "6533309" | "6666473" | "6893040" | "7032922" | "7267359" | "7377537" | "7431395" | "7475900" | "7681894" | "7766366").PN. OR ("7938435").URPN.	(US-PGPUB; USPAT; USOCR)	OR	ON	ON	2014/02/03 12:41 PM
L160	17	("20050098983" | "2842374" | "6357784" | "7118121" | "7267359" | "7367581" | "7441794" | "7527283").PN. OR ("7766366").URPN.	(US-PGPUB; USPAT; USOCR)	OR	ON	ON	2014/02/03 12:56 PM
L161	105	("1727335" | "2435733" | "2508905" | "2509103" | "2574743" | "2722966" | "2805076" | "2864429" | "3083997" | "3116069" | "3549164" | "3829113" | "4108468" | "4412689" | "4537414" | "4570956" | "4697845" | "4743063" | "4750783" | "4762331" | "4768795" | "4786064" | "4822064" | "4832354" | "4834403" | "4861105" | "4874182" | "4915401" | "4921261" | "5121940" | "5133567" | "5197753" | "5201535" | "5203577"	(US-PGPUB; USPAT; USOCR)	OR	ON	ON	2014/02/03 01:14 PM

		| "5234224" | "5265931" | "5364137" | "5375869" | "5385386" | "5499831" | "5527096" | "5564778" | "5567008" | "5601297" | "5676386" | "5707106" | "5727798" | "5772279" | "5865447" | "5876046" | "5974555").PN. OR ("6286844").URPN.					
L162	52	("3779655" | "4191397" | "4216974" | "4412688" | "4602889" | "4634177" | "4645371" | "4834403" | "5028061" | "5257799" | "5527096" | "5772279" | "5865447" | "6286844").PN. OR ("6513827").URPN.	(US-PGPUB; USPAT; USOCR)	OR	ON	ON	2014/02/03 01:21 PM
L168	1	("20140217706").PN.	(US-PGPUB; USPAT; USOCR)	OR	ON	ON	2014/09/24 10:03 AM
L169	3175	(280/650,657,647,648,658,639,642,643).CCLS.	(US-PGPUB; USPAT; USOCR)	OR	ON	ON	2014/09/24 10:24 AM
L170	7324421	@ad<="20081204"	(US-PGPUB; USPAT; USOCR)	OR	ON	ON	2014/09/24 10:24 AM
L171	1878	L169 and L170	(US-PGPUB; USPAT; USOCR)	OR	ON	ON	2014/09/24 10:25 AM
L172	64	(US-20100052277-$ or US-20070114738-$ or US-20070001429-$ or US-20060290107-$ or US-20030075903-$ or US-20080303232-$ or US-20070085303-$ or US-20060131841-$ or US-20060001226-$ or US-20080224451-$ or US-20010033069-$).did. or (US-5338096-$ or US-6045145-$ or US-3223431-$ or US-6378892-$ or US-5653460-$ or US-6209892-$ or US-5201535-$ or US-4620711-$ or US-6676140-$ or US-6017051-$ or US-1707186-$ or US-7475900-$ or US-7938435-$ or US-D508443-$ or US-7497461-$ or US-4570956-$ or US-6923467-$ or US-6752405-$ or US-	(US-PGPUB; USPAT; USOCR)	OR	ON	ON	2014/09/24 10:25 AM

		8157273-$ or US-7896384-$ or US-7677585-$ or US-8128103-$ or US-7597332-$ or US-7481439-$ or US-6851693-$ or US-5848797-$).did. or (US-3000645-$ or US-8070180-$ or US-7832755-$ or US-7261308-$ or US-5704627-$ or US-5794951-$ or US-5647601-$ or US-2453631-$ or US-6443467-$ or US-8205906-$ or US-8262103-$ or US-8336904-$ or US-8371606-$ or US-8251382-$ or US-7377537-$ or US-7320471-$ or US-7032922-$ or US-7367581-$ or US-8029007-$ or US-7699325-$ or US-6827356-$ or US-8398098-$ or US-7766366-$ or US-6286844-$ or US-6513827-$).did. or (US-3000645-$ or US-2453631-$).did.					
L173	3686032	@pd>="20140129"	(US-PGPUB; USPAT; USOCR; FPRS; EPO; JPO; DERWENT)	OR	ON	ON	2014/09/24 10:56 AM
L174	1	L171 and L173	(US-PGPUB; USPAT; USOCR; FPRS; EPO; JPO; DERWENT)	OR	ON	ON	2014/09/24 10:56 AM
L175	13	(Zehfuss near2 Mark).in.	(US-PGPUB; USPAT; USOCR; FPRS; EPO; JPO; DERWENT)	OR	ON	ON	2014/09/24 10:57 AM
L176	1	("7,497,461").PN.	(US-PGPUB; USPAT; USOCR)	OR	ON	ON	2014/09/24 11:01 AM
L177	94	L169 and L173	(US-PGPUB; USPAT; USOCR; FPRS; EPO; JPO; DERWENT)	OR	ON	ON	2014/09/24 11:08 AM
L178	12	("20070296182" | "20100117315" | "5820144" | "6086086" | "6513827" | "6715783" | "7032922" | "7066542" | "7364183" | "7377537" | "7455362" |	(US-PGPUB; USPAT; USOCR)	OR	ON	ON	2014/09/24 11:25 AM

		"8061732").PN. OR ("8764048").URPN.					
L179	15	("3797848" | "4832361" | "5074575" | "6116624" | "6446990" | "6508605" | "6530591" | "6824161" | "6830254" | "6851700" | "6951342" | "7021650" | "7273225" | "7401803" | "7513512").PN. OR ("8696016").URPN.	(US-PGPUB; USPAT; USOCR)	OR	ON	ON	2014/09/24 11:41 AM
L180	1	("7,938,435").PN.	(US-PGPUB; USPAT; USOCR)	OR	ON	ON	2014/09/24 11:47 AM
L181	1	("20080231022").PN.	(US-PGPUB; USPAT; USOCR)	OR	ON	ON	2014/09/24 11:47 AM
L182	2	("2008/0231022").URPN.	(USPAT)	OR	ON	ON	2014/09/24 11:48 AM
L183	1	("7,766,366").PN.	(US-PGPUB; USPAT; USOCR)	OR	ON	ON	2014/09/24 11:51 AM
L184	1	("6,286,844").PN.	(US-PGPUB; USPAT; USOCR)	OR	ON	ON	2014/09/24 11:52 AM
L185	1	("6,513,827").PN.	(US-PGPUB; USPAT; USOCR)	OR	ON	ON	2014/09/24 11:53 AM
L186	0	(2006/0131841).CCLS.	(US-PGPUB; USPAT; USOCR)	OR	ON	ON	2014/09/24 11:53 AM
L187	1	("20060131841").PN.	(US-PGPUB; USPAT; USOCR)	OR	ON	ON	2014/09/24 11:54 AM
L188	1	("20060001226").PN.	(US-PGPUB; USPAT; USOCR)	OR	ON	ON	2014/09/24 11:54 AM
L189	1	("7,320,471").PN.	(US-PGPUB; USPAT; USOCR)	OR	ON	ON	2014/09/24 11:55 AM
L190	1	("6,045,145").PN.	(US-PGPUB; USPAT; USOCR)	OR	ON	ON	2014/09/24 11:55 AM
L191	1	("20080224451").PN.	(US-PGPUB; USPAT; USOCR)	OR	ON	ON	2014/09/24 11:55 AM
L192	1	("7,481,439").PN.	(US-PGPUB; USPAT; USOCR)	OR	OFF	OFF	2014/09/24 11:57 AM
L193	1	("7,367,581").PN.	(US-PGPUB; USPAT; USOCR)	OR	OFF	OFF	2014/09/24 11:57 AM
L194	1	("8,029,007").PN.	(US-PGPUB; USPAT; USOCR)	OR	ON	ON	2014/09/24 11:58 AM
L195	1	("6,923,467").PN.	(US-PGPUB; USPAT; USOCR)	OR	OFF	OFF	2014/09/24 11:58 AM
L196	1	("20070090619").PN.	(US-PGPUB; USPAT; USOCR)	OR	OFF	OFF	2014/09/24 11:58 AM
L197	1	("6,851,693").PN.	(US-PGPUB; USPAT; USOCR)	OR	ON	ON	2014/09/24 11:59 AM
L198	1	("20010033069").PN.	(US-PGPUB; USPAT; USOCR)	OR	OFF	OFF	2014/09/24 12:00 PM
L199	1	("7,249,779").PN.	(US-PGPUB; USPAT; USOCR)	OR	ON	ON	2014/09/24 12:00 PM

L200	57	("1218943" | "1347384" | "1408729" | "1560288" | "20010035626" | "20030151225" | "2305719" | "2435733" | "2468933" | "2798727" | "3314494" | "3738700" | "3954283" | "4015297" | "4825484" | "4958842" | "5125674" | "5190306" | "5558357" | "5562300" | "5590896" | "5692760" | "5709400" | "5820146" | "5884922" | "5975551" | "6164666" | "6231056" | "6237995" | "6340168" | "6409190" | "6460866" | "6595536" | "6601862" | "6623023" | "6676140" | "6688614" | "7029015").PN. OR ("7249779").URPN.	(US-PGPUB; USPAT; USOCR)	OR	ON	ON	2014/09/24 12:02 PM
L201	2665	(297/130,232,243,463.1).CCLS.	(US-PGPUB; USPAT; USOCR)	OR	ON	ON	2014/09/24 12:02 PM
L202	79	L201 and L173	(US-PGPUB; USPAT; USOCR; FPRS; EPO; JPO; DERWENT)	OR	ON	ON	2014/09/24 12:03 PM
L203	2	L202 and L170	(US-PGPUB; USPAT; USOCR)	OR	ON	ON	2014/09/24 12:03 PM
L204	1	("5338096").PN.	(US-PGPUB; USPAT; USOCR)	OR	OFF	OFF	2014/09/24 01:24 PM
L205	1	("20030025304").PN.	(US-PGPUB; USPAT; USOCR)	OR	OFF	OFF	2014/09/24 01:25 PM
L206	1	("20070001429").PN.	(US-PGPUB; USPAT; USOCR)	OR	OFF	OFF	2014/09/24 01:25 PM
L207	1	("20070085303").PN.	(US-PGPUB; USPAT; USOCR)	OR	OFF	OFF	2014/09/24 01:26 PM
L208	1	("20070114738").PN.	(US-PGPUB; USPAT; USOCR)	OR	ON	ON	2014/09/24 01:26 PM
L209	1	("7681894").PN.	(US-PGPUB; USPAT; USOCR)	OR	ON	ON	2014/09/24 02:33 PM
L210	14	("20040164593" | "3145442" | "5865447" | "5947555" | "6446314" | "7032922").PN. OR ("7681894").URPN.	(US-PGPUB; USPAT; USOCR)	OR	ON	ON	2014/09/24 02:33 PM
L211	1	("7377537").PN.	(US-PGPUB; USPAT; USOCR)	OR	ON	ON	2014/09/24 02:34 PM
L212	41	("7249779"|"3000645"|"7677585"|"7377537"|"20060001226"|"8029007"|"20080231022"|"7766366"|"6443467"|"6561526"|"20080224451"|"65	(US-PGPUB; USPAT; USOCR)	OR	ON	ON	2014/09/24 02:56 PM

		13827"|"7475900"|"7497461"|"20070114738"|"1707186"|"6752405"|"6851693"|"7938435"|"6676140"|"6045145"|"6923467"|"20030025304"|"20070001429"|"5338096"|"6045145"|"20070090619"|"6209892"|"6378892"|"7896384"|"8157273"|"8251382"|"8262103"|"8336904"|"20010033069"|"20060131841"|"7320471"|"7367581"|"7481439"|"6286844").PN.					
L219	19	(Zehfuss near2 Mark).in.	(US-PGPUB; USPAT; USOCR; FPRS; EPO; JPO; DERWENT)	OR	ON	ON	2015/04/20 01:53 PM
L220	22	("7249779"|"20060001226"|"20080231022"|"7766366"|"8029007"|"20080224451"|"6513827"|"4797461"|"7497461"|"6851693"|"7938435"|"6045145"|"6923467"|"8905427"|"20070090619"|"20010033069"|"20060131841"|"6286844"|"7320471"|"7367581"|"7481439"|"8882134").PN.	(US-PGPUB; USPAT; USOCR)	OR	ON	ON	2015/04/20 01:58 PM
L221	1	("7475900").PN.	(US-PGPUB; USPAT; USOCR)	OR	ON	ON	2015/04/20 02:02 PM
L222	68470442	@ad<="20081204"	(US-PGPUB; USPAT; USOCR; FPRS; EPO; JPO)	OR	ON	ON	2015/04/20 02:02 PM
L223	1214191	@pd>="20140924"	(US-PGPUB; USPAT; USOCR; FPRS; EPO; JPO)	OR	ON	ON	2015/04/20 02:03 PM
L224	3292	(280/650,657,647,648,658,639,642,643).CCLS.	(US-PGPUB; USPAT; USOCR)	OR	ON	ON	2015/04/20 02:04 PM
L225	2741	(297/130,232,243,463.1).CCLS.	(US-PGPUB; USPAT; USOCR)	OR	ON	ON	2015/04/20 02:04 PM
L226	5977	L224 or L225	(US-PGPUB; USPAT; USOCR; FPRS; EPO; JPO)	OR	ON	ON	2015/04/20 02:04 PM
L227	2929	L226 and L222	(US-PGPUB; USPAT; USOCR; FPRS; EPO; JPO)	OR	ON	ON	2015/04/20 02:04 PM
L228	2	L227 and L223	(US-PGPUB; USPAT; USOCR; FPRS; EPO; JPO)	OR	ON	ON	2015/04/20 02:04 PM
L229	88	("0119331" | "1138802" | "1269379" | "1707186"	(US-PGPUB; USPAT; USOCR)	OR	ON	ON	2015/04/20 02:04 PM

		| "1890469" | "20040251063" | "20070045975" | "20090115151" | "20090160162" | "20100038887" | "20100140902" | "20110175330" | "3223431" | "3612603" | "3726536" | "4222132" | "4349938" | "4391453" | "4403807" | "4684148" | "4725071" | "4805938" | "4834415" | "4834452" | "4858947" | "4872692" | "4969656" | "5018754" | "5033761" | "5064209" | "5167425" | "5221106" | "5230523" | "5338096" | "5653460" | "5664795" | "5772235" | "5887935" | "5918892" | "6086087" | "6099022" | "6267406" | "6357784" | "6361111" | "6375213" | "6431579" | "6527294" | "6536842" | "6585284" | "6676140" | "6679506" | "6752405" | "6843498" | "6935652" | "6938906" | "6938954" | "7025364" | "7364183" | "7367581" | "7516966" | "7597332" | "7896384" | "8128103" | "8157273" | "8398143" | "D296540" | "D300310" | "D305316" | "D321850" | "D328047" | "D348489" | "D360392" | "D370437" | "D382516" | "D404344" | "D430512" | "D431212" | "D452191" | "D568794" | "D593458" | "D595621" | "D598333").PN. OR ("8905427").URPN.					
L230	84	(B62B7/00).CPC.	(US-PGPUB; USPAT; USOCR; FPRS; EPO; JPO)	OR	ON	ON	2015/04/20 02:08 PM
L231	796	(B62B7/008).CPC.	(US-PGPUB; USPAT; USOCR; FPRS; EPO; JPO)	OR	ON	ON	2015/04/20 02:12 PM
L232	666	(B62B7/14).CPC.	(US-PGPUB; USPAT; USOCR; FPRS; EPO; JPO)	OR	ON	ON	2015/04/20 02:12 PM
L233	894	(B62B7/142).CPC.	(US-PGPUB; USPAT;	OR	ON	ON	2015/04/20

			USOCR; FPRS; EPO; JPO)				02:12 PM
L234	1003	(B62B9/102).CPC.	(US-PGPUB; USPAT; USOCR; FPRS; EPO; JPO)	OR	ON	ON	2015/04/20 02:12 PM
L235	450	(B62B9/12).CPC.	(US-PGPUB; USPAT; USOCR; FPRS; EPO; JPO)	OR	ON	ON	2015/04/20 02:12 PM
L236	3236	L230 L231 L232 L233 L234 L235	(US-PGPUB; USPAT; USOCR; FPRS; EPO; JPO)	OR	ON	ON	2015/04/20 02:12 PM
L237	2104	L236 and L222	(US-PGPUB; USPAT; USOCR; FPRS; EPO; JPO)	OR	ON	ON	2015/04/20 02:13 PM
L238	70	L237 and (seat$3 same revers$4)	(US-PGPUB; USPAT; USOCR; FPRS; EPO; JPO)	OR	ON	ON	2015/04/20 02:14 PM
L239	77	(US-20100052277-$ or US-20070114738-$ or US-20070001429-$ or US-20060290107-$ or US-20030075903-$ or US-20080303232-$ or US-20070085303-$ or US-20060131841-$ or US-20060001226-$ or US-20080224451-$ or US-20010033069-$ or US-20030025304-$ or US-20070069505-$ or US-20080231022-$).did. or (US-5338096-$ or US-6045145-$ or US-3223431-$ or US-6378892-$ or US-5653460-$ or US-6209892-$ or US-5201535-$ or US-4620711-$ or US-6676140-$ or US-6017051-$ or US-1707186-$ or US-7475900-$ or US-7938435-$ or US-D508443-$ or US-7497461-$ or US-4570956-$ or US-6923467-$ or US-6752405-$ or US-8157273-$ or US-7896384-$ or US-7677585-$ or US-8128103-$ or US-7597332-$ or US-7481439-$ or US-6851693-$ or US-	(US-PGPUB; USPAT; USOCR)	OR	ON	ON	2015/04/20 02:14 PM

		5848797-$).did. or (US-3000645-$ or US-8070180-$ or US-7832755-$ or US-7261308-$ or US-5704627-$ or US-5794951-$ or US-5647601-$ or US-2453631-$ or US-6443467-$ or US-8205906-$ or US-8262103-$ or US-8336904-$ or US-8371606-$ or US-8251382-$ or US-7377537-$ or US-7320471-$ or US-7032922-$ or US-7367581-$ or US-8029007-$ or US-7699325-$ or US-6827356-$ or US-8398098-$ or US-7766366-$ or US-6286844-$ or US-6513827-$ or US-8764048-$ or US-8061732-$).did. or (US-8733784-$ or US-8696016-$ or US-8231136-$ or US-8458880-$ or US-7249779-$ or US-7681894-$ or US-8955869-$ or US-8905427-$).did. or (US-3000645-$ or US-2453631-$).did.					
L240	58	L238 not L239	(US-PGPUB; USPAT; USOCR; FPRS; EPO; JPO)	OR	ON	ON	2015/04/20 02:14 PM
L241	1	("8882134").PN.	(US-PGPUB; USPAT; USOCR)	OR	ON	ON	2015/04/20 02:15 PM
L242	87	("1239498" | "1322788" | "1418929" | "1832770" | "20020125662" | "20040011884" | "20050253348" | "20050253431" | "20050264064" | "20060290107" | "20070001410" | "20070075510" | "20070114738" | "20070257526" | "20080042476" | "20090072520" |	(US-PGPUB; USPAT; USOCR)	OR	ON	ON	2015/04/20 02:16 PM

		"20090302556" | "20090302578" | "20100032925" | "20100072731" | "20100109270" | "20100109293" | "20100140902" | "20100148553" | "20100314925" | "20110074195" | "20110101742" | "20110115264" | "20120080244" | "20130154215" | "3173396" | "3831960" | "4310167" | "4433869" | "4893826" | "4936629" | "5022669" | "5158319" | "5301968" | "5417449" | "5556118" | "5581843" | "5653460" | "5664795" | "5722594" | "6086087" | "6135222" | "6267406" | "6312005" | "6394470" | "6454286" | "6540239" | "6698788" | "6702306" | "6935652" | "6938906" | "7059625" | "7261308" | "7338122" | "7481439" | "7497449" | "7559606" | "7597332" | "7740313" | "7770970" | "7780184" | "7789413" | "7832756" | "7854435" | "7887129" | "7891732" | "7938433" | "7971897" | "7992889" | "8029007" | "8070179" | "8128119" | "8157273" | "8262107" | "8276935" | "D326748" | "D431798").PN. OR ("8882134").URPN.					
L243	1	("6361111").PN.	(US-PGPUB; USPAT; USOCR)	OR	ON	ON	2015/04/20 02:19 PM
L244	1	("20040251063").PN.	(US-PGPUB; USPAT; USOCR)	OR	ON	ON	2015/04/20 02:19 PM
L245	1	("6527294").PN.	(US-PGPUB; USPAT; USOCR)	OR	ON	ON	2015/04/20 02:20 PM
L246	1	("20070045975").PN.	(US-PGPUB; USPAT; USOCR)	OR	ON	ON	2015/04/20 02:20 PM
L247	27	("20060001226" | "20070045975" | "20080296872" | "20090033066" | "5301970" | "5520433" | "5601302" | "5709400" |	(US-PGPUB; USPAT; USOCR)	OR	ON	ON	2015/04/20 02:30 PM

		"5845924" | "6099022" | "6193263" | "6203054" | "6209892" | "6398233" | "6446990" | "6540250" | "6715783" | "7377537" | "7475900" | "7753398").PN. OR ("8029014").URPN.					
L249	2790	(297/130,232,243,463.1).CCLS.	(US-PGPUB; USPAT; USOCR)	OR	ON	ON	2015/12/07 10:16 AM
L250	3337	(280/650,657,647,648,658,639,642,643).CCLS.	(US-PGPUB; USPAT; USOCR)	OR	ON	ON	2015/12/07 10:16 AM
L251	102	(B62B7/00).CPC.	(US-PGPUB; USPAT; USOCR; FPRS; EPO; JPO)	OR	ON	ON	2015/12/07 10:17 AM
L252	824	(B62B7/008).CPC.	(US-PGPUB; USPAT; USOCR; FPRS; EPO; JPO)	OR	ON	ON	2015/12/07 10:17 AM
L253	686	(B62B7/14).CPC.	(US-PGPUB; USPAT; USOCR; FPRS; EPO; JPO)	OR	ON	ON	2015/12/07 10:17 AM
L254	947	(B62B7/142).CPC.	(US-PGPUB; USPAT; USOCR; FPRS; EPO; JPO)	OR	ON	ON	2015/12/07 10:17 AM
L255	1031	(B62B9/102).CPC.	(US-PGPUB; USPAT; USOCR; FPRS; EPO; JPO)	OR	ON	ON	2015/12/07 10:17 AM
L256	520	(B62B9/12).CPC.	(US-PGPUB; USPAT; USOCR; FPRS; EPO; JPO)	OR	ON	ON	2015/12/07 10:17 AM
L257	3385	L251 L252 L253 L254 L255 L256	(US-PGPUB; USPAT; USOCR; FPRS; EPO; JPO)	OR	ON	ON	2015/12/07 10:17 AM
L258	1888686	@pd>="20150420"	(US-PGPUB; USPAT; USOCR; FPRS; EPO; JPO)	OR	ON	ON	2015/12/07 10:17 AM
L259	6070	L249 or L250	(US-PGPUB; USPAT; USOCR; FPRS; EPO; JPO)	OR	ON	ON	2015/12/07 10:17 AM
L260	49	L258 and L249	(US-PGPUB; USPAT; USOCR; FPRS; EPO; JPO)	OR	ON	ON	2015/12/07 10:17 AM
L261	93	L258 and L259	(US-PGPUB; USPAT; USOCR; FPRS; EPO; JPO)	OR	ON	ON	2015/12/07 10:17 AM
L262	45	L258 and L250	(US-PGPUB; USPAT; USOCR; FPRS; EPO; JPO)	OR	ON	ON	2015/12/07 10:17 AM
L263	44	L262 not L260	(US-PGPUB; USPAT; USOCR; FPRS; EPO; JPO)	OR	ON	ON	2015/12/07 10:18 AM
L264	105	L258 and L257	(US-PGPUB; USPAT; USOCR; FPRS; EPO;	OR	ON	ON	2015/12/07 10:19 AM

			JPO)				
L265	94	L264 not L263	(US-PGPUB; USPAT; USOCR; FPRS; EPO; JPO)	OR	ON	ON	2015/12/07 10:19 AM
L266	93	L265 not L260	(US-PGPUB; USPAT; USOCR; FPRS; EPO; JPO)	OR	ON	ON	2015/12/07 10:19 AM
L267	1	("8936261").PN.	(US-PGPUB; USPAT; USOCR)	OR	ON	ON	2015/12/07 12:33 PM
L268	64	("20040164593" | "20060261565" | "20070045975" | "20070069505" | "20070187914" | "20080054579" | "20080150247" | "20080179848" | "20080303232" | "20090033066" | "20090102162" | "20090256323" | "20100013281" | "20100102535" | "20100127480" | "20100230933" | "20100244408" | "20100259021" | "20110204600" | "20110291389" | "20110304124" | "20120025492" | "20120153583" | "20120242062" | "20120261961" | "20130113188" | "4872692" | "5018405" | "5676386" | "5722682" | "5947555" | "6513827" | "6530591" | "6581957" | "6851700" | "7032922" | "7267359" | "7377537" | "7401803" | "7681894" | "7686323" | "7753397" | "7753398" | "7789402" | "7798500" | "7938435" | "8029014" | "8033555" | "8157286" | "8205906" | "8240700" | "8251382" | "8322744" | "8366127" | "8454049" | "8465045" | "8469388" | "8474854" | "8480116" | "8485546" | "8544873" | "8550489" | "8596669").PN. OR ("8936261").URPN.	(US-PGPUB; USPAT; USOCR)	OR	OFF	OFF	2015/12/07 12:33 PM
L269	18	("1671774" | "1707186"	(US-PGPUB; USPAT;	OR	OFF	OFF	2015/12/07

		| "20050167951" | "20070194545" | "20100052277" | "20110163519" | "20120118516" | "7032922" | "7871100" | "8157273" | "8251382" | "8585075" | "8651502" | "8727370" | "D686541").PN. OR ("9010773").URPN.	USOCR)				01:12 PM
L270	1	("6,286,844").PN.	(US-PGPUB; USPAT; USOCR)	OR	ON	ON	2015/12/07 06:14 PM
L271	110	(B62B7/00).CPC.	(US-PGPUB; USPAT; USOCR; FPRS; EPO; JPO)	OR	ON	ON	2016/02/12 12:45 PM
L272	855	(B62B7/008).CPC.	(US-PGPUB; USPAT; USOCR; FPRS; EPO; JPO)	OR	ON	ON	2016/02/12 12:45 PM
L273	694	(B62B7/14).CPC.	(US-PGPUB; USPAT; USOCR; FPRS; EPO; JPO)	OR	ON	ON	2016/02/12 12:45 PM
L274	989	(B62B7/142).CPC.	(US-PGPUB; USPAT; USOCR; FPRS; EPO; JPO)	OR	ON	ON	2016/02/12 12:45 PM
L275	1052	(B62B9/102).CPC.	(US-PGPUB; USPAT; USOCR; FPRS; EPO; JPO)	OR	ON	ON	2016/02/12 12:45 PM
L276	540	(B62B9/12).CPC.	(US-PGPUB; USPAT; USOCR; FPRS; EPO; JPO)	OR	ON	ON	2016/02/12 12:45 PM
L277	3473	L271 L272 L273 L274 L275 L276	(US-PGPUB; USPAT; USOCR; FPRS; EPO; JPO)	OR	ON	ON	2016/02/12 12:45 PM
L278	3353	(280/650,657,647,648,658,639,642,643).CCLS.	(US-PGPUB; USPAT; USOCR)	OR	ON	ON	2016/02/12 12:46 PM
L279	2802	(297/130,232,243,463.1).CCLS.	(US-PGPUB; USPAT; USOCR)	OR	ON	ON	2016/02/12 12:46 PM
L280	279114	@pd>="20151207"	(US-PGPUB; USPAT; USOCR; FPRS; EPO; JPO)	OR	ON	ON	2016/02/12 12:47 PM
L281	21	L277 and L280	(US-PGPUB; USPAT; USOCR; FPRS; EPO; JPO)	OR	ON	ON	2016/02/12 12:53 PM
L282	16	L278 and L280	(US-PGPUB; USPAT; USOCR; FPRS; EPO; JPO)	OR	ON	ON	2016/02/12 12:53 PM
L283	12	L279 and L280	(US-PGPUB; USPAT; USOCR; FPRS; EPO; JPO)	OR	ON	ON	2016/02/12 12:53 PM
L284	17	L281 not (L282 or L283)	(US-PGPUB; USPAT; USOCR; FPRS; EPO; JPO)	OR	ON	ON	2016/02/12 12:53 PM

L285	2	("20070069504" | "7401803").PN. OR ("9242665").URPN.	(US-PGPUB; USPAT; USOCR)	OR	ON	ON	2016/02/12 01:16 PM
L286	70	("20030020259" | "20040094935" | "20060226635" | "20060290107" | "20070075525" | "20070085303" | "20070114738" | "20070267833" | "20080001370" | "20080179863" | "20080224432" | "20090039620" | "20090236826" | "20090302578" | "20100038886" | "20100038887" | "20100072731" | "20100140902" | "20100201089" | "20100282800" | "20100301585" | "20110175330" | "20120098219" | "20120098237" | "20120169021" | "20130049331" | "20130234419" | "20130264787" | "20130270800" | "20140159346" | "20140312586" | "20140346756" | "4542915" | "4725071" | "5338096" | "5417449" | "5664795" | "6086087" | "6267406" | "6676140" | "6702316" | "6843498" | "6877761" | "7451999" | "7699325" | "7971884" | "8070180" | "8146926" | "8157273" | "8205894" | "8282109" | "8322745" | "8398143" | "8444171" | "8480115" | "8684395" | "8714582" | "8757646" | "8807588" | "8844964" | "8857829" | "8905427" | "8915516" | "D321850" | "D359937" | "D375706" | "D429664" | "D430076" | "D431212" | "D636300").PN. OR ("9227650").URPN.	(US-PGPUB; USPAT; USOCR)	OR	ON	ON	2016/02/12 01:18 PM
L287	1	("7475900").PN.	(US-PGPUB; USPAT;	OR	ON	ON	2016/02/12

			USOCR)				01:19 PM
L288	1	("4343124").PN.	(US-PGPUB; USPAT; USOCR)	OR	ON	ON	2016/02/12 03:17 PM
L289	1	("4340124").PN.	(US-PGPUB; USPAT; USOCR)	OR	ON	ON	2016/02/12 03:18 PM
L290	1	("20140361517").PN.	(US-PGPUB; USPAT; USOCR)	OR	ON	ON	2016/02/12 03:50 PM
L291	111	(B62B7/00).CPC.	(US-PGPUB; USPAT; USOCR; FPRS; EPO; JPO)	OR	ON	ON	2016/03/25 04:44 PM
L292	864	(B62B7/008).CPC.	(US-PGPUB; USPAT; USOCR; FPRS; EPO; JPO)	OR	ON	ON	2016/03/25 04:44 PM
L293	699	(B62B7/14).CPC.	(US-PGPUB; USPAT; USOCR; FPRS; EPO; JPO)	OR	ON	ON	2016/03/25 04:44 PM
L294	993	(B62B7/142).CPC.	(US-PGPUB; USPAT; USOCR; FPRS; EPO; JPO)	OR	ON	ON	2016/03/25 04:44 PM
L295	1054	(B62B9/102).CPC.	(US-PGPUB; USPAT; USOCR; FPRS; EPO; JPO)	OR	ON	ON	2016/03/25 04:44 PM
L296	542	(B62B9/12).CPC.	(US-PGPUB; USPAT; USOCR; FPRS; EPO; JPO)	OR	ON	ON	2016/03/25 04:44 PM
L297	3486	L291 L292 L293 L294 L295 L296	(US-PGPUB; USPAT; USOCR; FPRS; EPO; JPO)	OR	ON	ON	2016/03/25 04:44 PM
L298	3358	(280/650,657,647,648,658,639,642,643).CCLS.	(US-PGPUB; USPAT; USOCR)	OR	ON	ON	2016/03/25 04:45 PM
L299	2805	(297/130,232,243,463.1).CCLS.	(US-PGPUB; USPAT; USOCR)	OR	ON	ON	2016/03/25 04:45 PM
L300	6106	L298 or L299	(US-PGPUB; USPAT; USOCR; FPRS; EPO; JPO)	OR	ON	ON	2016/03/25 04:45 PM
L301	83034	@pd>="20160212"	(US-PGPUB; USPAT; USOCR; FPRS; EPO; JPO)	OR	ON	ON	2016/03/25 04:45 PM
L302	8	L300 and L301	(US-PGPUB; USPAT; USOCR; FPRS; EPO; JPO)	OR	ON	ON	2016/03/25 04:59 PM
L303	6	L297 and L301	(US-PGPUB; USPAT; USOCR; FPRS; EPO; JPO)	OR	ON	ON	2016/03/25 05:01 PM
L304	13	("20080231022" | "20090243261" | "20130113188" | "6513827" | "7267359" | "7377537" | "7798500" | "7938435" | "8061732" | "8733784" | "8764048" | "8777253" |	(US-PGPUB; USPAT; USOCR)	OR	ON	ON	2016/03/25 05:03 PM

		"8955869").PN. OR ("9260128").URPN.					
L305	94	("1239498" | "1322788" | "1418929" | "1832770" | "20020125662" | "20040011884" | "20050253348" | "20050253431" | "20050264064" | "20060290107" | "20070001410" | "20070075510" | "20070114738" | "20070257526" | "20080042476" | "20080224451" | "20090072520" | "20090302556" | "20090302578" | "20100032925" | "20100072731" | "20100109270" | "20100109293" | "20100140902" | "20100148553" | "20100314925" | "20110074195" | "20110101742" | "20110115264" | "20120080244" | "20130154215" | "20140191483" | "3173396" | "3831960" | "4310167" | "4433869" | "4893826" | "4936629" | "5022669" | "5158319" | "5301968" | "5417449" | "5556118" | "5581843" | "5653460" | "5664795" | "5722594" | "6086087" | "6135222" | "6267406" | "6312005" | "6394470" | "6454286" | "6540239" | "6698788" | "6702306" | "6877762" | "6935652" | "6938906" | "6981709" | "7059625" | "7261308" | "7338122" | "7481439" | "7497449" | "7559606" | "7597332" | "7740313" | "7770970" | "7780184" | "7789413" | "7832756" | "7854435" | "7887129" | "7891732" | "7938433" | "7971897" | "7992889" | "8029007" | "8070179" | "8128118" | "8128119" | "8157273" | "8262107" |	(US-PGPUB; USPAT; USOCR)	OR	ON	ON	2016/03/25 05:04 PM

		"8276935" | "8882134" | "9056622" | "D326748" | "D431798").PN. OR ("9260127").URPN.					
L306	1	("20150123440").PN.	(US-PGPUB; USPAT; USOCR)	OR	ON	ON	2016/03/25 05:20 PM
L307	1	("8955869").PN.	(US-PGPUB; USPAT; USOCR)	OR	ON	ON	2016/03/25 05:22 PM
L308	32	("20010033069" | "20060001226" | "20060131841" | "20070090619" | "20080224451" | "20080231022" | "6045145" | "6286844" | "6513827" | "6851693" | "6923467" | "7249779" | "7311323" | "7320471" | "7367581" | "7377537" | "7475900" | "7481439" | "7497461" | "7681894" | "7766366" | "7938435" | "8029007" | "8033554" | "8061732" | "8231136" | "8444171" | "8458880" | "8696016" | "8733784" | "8764048").PN. OR ("8955869").URPN.	(US-PGPUB; USPAT; USOCR)	OR	ON	ON	2016/03/25 05:22 PM
L309	2	"39773911".FMID.	(US-PGPUB; USPAT; FPRS)	OR	ON	ON	2016/03/25 05:27 PM
L310	32	("4657269" | "4836573" | "5184835" | "5338096" | "5664795" | "5911432").PN. OR ("6045145").URPN.	(US-PGPUB; USPAT; USOCR)	OR	ON	ON	2016/03/25 05:33 PM
L311	28	("1203729" | "1321009" | "20020036391" | "20050023783" | "20070075525" | "20070216138" | "20070222167" | "20090315300" | "20100072732" | "2769482" | "4923208" | "5338096" | "5417449" | "5664795" | "5722682" | "5740989" | "5887935" | "6045145" | "6378892" | "6676140" | "7011318" | "7445229" | "8282119" | "D587635" | "D614540").PN. OR ("8857830").URPN.	(US-PGPUB; USPAT; USOCR)	OR	ON	ON	2016/03/25 05:37 PM
L312	15	"37454081".FMID.	(US-PGPUB; USPAT; FPRS)	OR	ON	ON	2016/03/25 05:37 PM

L313	1	"41399621".FMID.	(US-PGPUB; USPAT; FPRS)	OR	ON	ON	2016/03/25 05:41 PM
L314	6	("2009/0302578").URPN.	(USPAT)	OR	ON	ON	2016/03/25 05:42 PM
L315	70	("20030020259" | "20040094935" | "20060226635" | "20060290107" | "20070075525" | "20070085303" | "20070114738" | "20070267833" | "20080001370" | "20080179863" | "20080224432" | "20090039620" | "20090236826" | "20090302578" | "20100038886" | "20100038887" | "20100072731" | "20100140902" | "20100201089" | "20100282800" | "20100301585" | "20110175330" | "20120098219" | "20120098237" | "20120169021" | "20130049331" | "20130234419" | "20130264787" | "20130270800" | "20140159346" | "20140312586" | "20140346756" | "4542915" | "4725071" | "5338096" | "5417449" | "5664795" | "6086087" | "6267406" | "6676140" | "6702316" | "6843498" | "6877761" | "7451999" | "7699325" | "7971884" | "8070180" | "8146926" | "8157273" | "8205894" | "8282109" | "8322745" | "8398143" | "8444171" | "8480115" | "8684395" | "8714582" | "8757646" | "8807588" | "8844964" | "8857829" | "8905427" | "8915516" | "D321850" | "D359937" | "D375706" | "D429664" | "D430076" | "D431212" | "D636300").PN. OR ("9227650").URPN.	(US-PGPUB; USPAT; USOCR)	OR	ON	ON	2016/03/25 05:43 PM

L316	108	(US-20100052277-$ or US-20070114738-$ or US-20070001429-$ or US-20060290107-$ or US-20030075903-$ or US-20080303232-$ or US-20070085303-$ or US-20060131841-$ or US-20060001226-$ or US-20080224451-$ or US-20010033069-$ or US-20030025304-$ or US-20070187914-$ or US-20070069505-$ or US-20080231022-$ or US-20100301585-$ or US-20100013281-$ or US-20150360709-$ or US-20070069504-$ or US-20100072732-$ or US-20090302578-$ or US-20130113188-$ or US-20090243261-$).did. or (US-5338096-$ or US-6045145-$ or US-3223431-$ or US-6378892-$ or US-5653460-$ or US-6209892-$ or US-5201535-$ or US-4620711-$ or US-6676140-$ or US-6017051-$ or US-1707186-$ or US-7475900-$ or US-7938435-$ or US-D508443-$ or US-7497461-$ or US-4570956-$ or US-6923467-$ or US-6752405-$ or US-8157273-$ or US-7896384-$ or US-7677585-$ or US-8128103-$ or US-7597332-$ or US-7481439-$ or US-6851693-$ or US-5848797-$).did. or (US-3000645-$ or US-8070180-$ or US-7832755-$ or US-7261308-$ or US-5704627-$ or US-5794951-$ or US-5647601-$ or US-2453631-$ or US-6443467-$ or US-	(US-PGPUB; USPAT; USOCR)	OR	ON	ON	2016/03/25 05:54 PM

		8205906-$ or US-8262103-$ or US-8336904-$ or US-8371606-$ or US-8251382-$ or US-7377537-$ or US-7320471-$ or US-7032922-$ or US-7367581-$ or US-8029007-$ or US-7699325-$ or US-6827356-$ or US-8398098-$ or US-7766366-$ or US-6286844-$ or US-6513827-$ or US-8764048-$ or US-8061732-$).did. or (US-8733784-$ or US-8696016-$ or US-8231136-$ or US-8458880-$ or US-7249779-$ or US-7311323-$ or US-8444171-$ or US-8033554-$ or US-7681894-$ or US-8955869-$ or US-8905427-$ or US-8882134-$ or US-8029014-$ or US-7789402-$ or US-7658399-$ or US-5167425-$ or US-8936261-$ or US-9010773-$ or US-9119483-$ or US-9200746-$ or US-9199659-$ or US-9108659-$ or US-9073563-$ or US-9242665-$ or US-7401803-$ or US-9227650-$ or US-9260128-$).did. or (US-9260127-$ or US-8857830-$ or US-2769482-$).did. or (US-3000645-$ or US-2453631-$).did.					
L317	1	("20090290107").PN.	(US-PGPUB; USPAT; USOCR)	OR	ON	ON	2016/03/25 05:56 PM
L318	1	("20060290107").PN.	(US-PGPUB; USPAT; USOCR)	OR	ON	ON	2016/03/25 05:58 PM
L319	1	("4542915").PN.	(US-PGPUB; USPAT; USOCR)	OR	ON	ON	2016/03/25 06:07 PM
L320	2	"47750100".FMID.	(US-PGPUB; USPAT;	OR	ON	ON	2016/03/25

			FPRS)				09:54 PM
L321	1	("6209892").PN.	(US-PGPUB; USPAT; USOCR)	OR	ON	ON	2016/03/25 11:02 PM
L322	60	("3829113" | "4729572" | "4768795" | "4861105" | "5056865" | "5076599" | "5146656" | "5322343" | "5676386" | "5727798" | "5820144" | "5887889").PN. OR ("6209892").URPN.	(US-PGPUB; USPAT; USOCR)	OR	ON	ON	2016/03/25 11:02 PM
L323	60	("3829113" | "4729572" | "4768795" | "4861105" | "5056865" | "5076599" | "5146656" | "5322343" | "5676386" | "5727798" | "5820144" | "5887889").PN. OR ("6209892").URPN.	(US-PGPUB; USPAT; USOCR)	OR	ON	ON	2016/03/28 11:14 AM
L324	0	(A stroller, comprising a stroller frame a plurality of wheels, including front and rear wheels a first seat coupled to the stroller frame at a first vertical position closer to a handle of the stroller frame and configured to hold a first child in the stroller a second seat attachment coupled to the stroller frame at a second vertical position substantially below the first vertical position and closer to the front wheels and comprising a left seat support element, wherein the left seat support element comprises a first connector portion releasably connected to the stroller frame closer to left front wheel and a left seat connector releasably connecting a second seat in either a forward or backward position and a right seat support element, wherein the right seat support element comprises a second connector portion releasably connected to	(US-PGPUB; USPAT; USOCR; FPRS; EPO; JPO)	AND	ON	ON	2016/03/28 01:20 PM

		the stroller frame closer to a right front wheel and a right seat connector releasably connecting the second seat in either a forward or backward position between the left and right seat support connectors and the second seat releasably connected to the left seat connector and the right seat connector and configured to hold a second child in the stroller while the first seat holds the first child).clm.					
L325	0	(stroller frame wheel seat first vertical position handle child attach$4 coupl$3 left seat support element, first connector portion releas$4 connect$4 forward backward position).clm.	(US-PGPUB; USPAT; USOCR; FPRS; EPO; JPO)	AND	ON	ON	2016/03/28 01:42 PM
L326	0	(stroller frame wheel seat vertical position handle attach$4 coupl$3 left seat support element, first connector portion releas$4 connect$4 forward backward position).clm.	(US-PGPUB; USPAT; USOCR; FPRS; EPO; JPO)	AND	ON	ON	2016/03/28 01:42 PM
L327	0	(stroller frame wheel seat vertical position handle attach$4 coupl$3 left support element portion releas$4 connect$4 forward backward position).clm.	(US-PGPUB; USPAT; USOCR; FPRS; EPO; JPO)	AND	ON	ON	2016/03/28 01:43 PM
L328	0	(stroller frame wheel seat vertical position handle attach$4 coupl$3 left support element portion releas$4 connect$4 forward backward).clm.	(US-PGPUB; USPAT; USOCR; FPRS; EPO; JPO)	AND	ON	ON	2016/03/28 01:43 PM
L329	0	(stroller frame wheel seat vertical position handle attach$4 coupl$3 left support$4	(US-PGPUB; USPAT; USOCR; FPRS; EPO; JPO)	AND	ON	ON	2016/03/28 01:43 PM

		releas$4 connect$4 forward backward).clm.					
L330	3	(stroller frame wheel seat vertical position handle attach$4 left support$4 releas$4 connect$4).clm.	(US-PGPUB; USPAT; USOCR; FPRS; EPO; JPO)	AND	ON	ON	2016/03/28 01:44 PM
L331	14	(stroller frame wheel seat vertical position handle attach$4 support$4 releas$4 connect$4).clm.	(US-PGPUB; USPAT; USOCR; FPRS; EPO; JPO)	AND	ON	ON	2016/03/28 01:45 PM
L332	15	(stroller frame wheel seat vertical position handle attach$4 releas$4 connect$4).clm.	(US-PGPUB; USPAT; USOCR; FPRS; EPO; JPO)	AND	ON	ON	2016/03/28 01:46 PM
L333	1	L332 not L331	(US-PGPUB; USPAT; USOCR; FPRS; EPO; JPO)	AND	ON	ON	2016/03/28 01:46 PM
L334	18	(stroller frame wheel seat vertical position handle attach$4 releas$4).clm.	(US-PGPUB; USPAT; USOCR; FPRS; EPO; JPO)	AND	ON	ON	2016/03/28 01:47 PM
L335	3	L334 not L332	(US-PGPUB; USPAT; USOCR; FPRS; EPO; JPO)	AND	ON	ON	2016/03/28 01:47 PM
L336	25	(stroller frame wheel seat vertical position$4 attach$4 releas$4).clm.	(US-PGPUB; USPAT; USOCR; FPRS; EPO; JPO)	AND	ON	ON	2016/03/28 01:48 PM
L337	7	L336 not L334	(US-PGPUB; USPAT; USOCR; FPRS; EPO; JPO)	AND	ON	ON	2016/03/28 01:48 PM
L338	1	"41399621".FMID.	(US-PGPUB; USPAT; FPRS)	OR	ON	ON	2016/03/28 01:48 PM
L339	1	("20160339940").PN.	(US-PGPUB; USPAT; USOCR)	OR	ON	ON	2017/06/08 04:58 PM
L340	3453	(B62B7/008,00,006,14, 142,145).CPC.	(US-PGPUB; USPAT; USOCR; FPRS; EPO; JPO)	OR	ON	ON	2017/06/08 05:22 PM
L341	2353	(B62B9/12,28,102).CPC.	(US-PGPUB; USPAT; USOCR; FPRS; EPO; JPO)	OR	ON	ON	2017/06/08 05:23 PM
L342	5184262	@pd>="20160325"	(US-PGPUB; USPAT; USOCR; FPRS; EPO; JPO)	OR	ON	ON	2017/06/08 05:31 PM
L343	5004	L340 or L341	(US-PGPUB; USPAT; USOCR; FPRS; EPO; JPO)	OR	ON	ON	2017/06/08 05:33 PM
L344	254	L342 and L343	(US-PGPUB; USPAT; USOCR; FPRS; EPO; JPO)	OR	ON	ON	2017/06/08 05:33 PM
L346	4	(Lee near2 (Jon and	(US-PGPUB; USPAT;	OR	ON	ON	2017/06/08

		Hee)).in.	USOCR; FPRS; EPO; JPO; DERWENT)				05:52 PM
L347	14	(Roe near2 Megan).in.	(US-PGPUB; USPAT; USOCR; FPRS; EPO; JPO; DERWENT)	OR	ON	ON	2017/06/12 08:15 AM
L348	1	(Simpson near2 (Stacy and Noel)).in.	(US-PGPUB; USPAT; USOCR; FPRS; EPO; JPO; DERWENT)	OR	ON	ON	2017/06/12 08:16 AM
L349	66	("1707186"|"20010033069"|"20060001226"|"20060131841"|"20060290107"|"20070090619"|"20080224451"|"20080231022"|"20090302578"|"3000645"|"4542915"|"5338096"|"6045145"|"6209892"|"6286844"|"6378892"|"6443467"|"6513827"|"6561526"|"6676140"|"6752405"|"6851693"|"6923467"|"7249779"|"7311323"|"7320471"|"7367581"|"7377537"|"7401803"|"7475900"|"7481439"|"7497461"|"7677585"|"7681894"|"7766366"|"7896384"|"7938435"|"8029007"|"8029014"|"8033554"|"8061732"|"8157273"|"8231136"|"8251382"|"8262103"|"8336904"|"8444171"|"8458880"|"8696016"|"8733784"|"8764048"|"8882134"|"8905427"|"8936261"|"9010773"|"9108654"|"9108659"|"9119483"|"9199659"|"9200746"|"9227650"|"9242665"|"9260127"|"9260128").PN.	(US-PGPUB; USPAT; USOCR)	OR	ON	ON	2017/06/12 09:35 AM
L350	111	(US-20100052277-$ or US-20070114738-$ or US-20070001429-$ or US-20060290107-$ or US-20030075903-$ or US-20080303232-$ or US-20070085303-$ or US-20060131841-$ or US-20060001226-$ or US-20080224451-$ or US-20010033069-$ or US-20030025304-$ or US-20070187914-$ or US-20070069505-$ or US-20080231022-$ or US-20100301585-$ or	(US-PGPUB; USPAT; USOCR)	OR	ON	ON	2017/06/12 09:36 AM

		US-20100013281-$ or US-20150360709-$ or US-20070069504-$ or US-20100072732-$ or US-20090302578-$ or US-20130113188-$ or US-20090243261-$ or US-20130049331-$).did. or (US-5338096-$ or US-6045145-$ or US-3223431-$ or US-6378892-$ or US-5653460-$ or US-6209892-$ or US-5201535-$ or US-4620711-$ or US-6676140-$ or US-6017051-$ or US-1707186-$ or US-7475900-$ or US-7938435-$ or US-D508443-$ or US-7497461-$ or US-4570956-$ or US-6923467-$ or US-6752405-$ or US-8157273-$ or US-7896384-$ or US-7677585-$ or US-8128103-$ or US-7597332-$ or US-7481439-$ or US-6851693-$ or US-5848797-$).did. or (US-3000645-$ or US-8070180-$ or US-7832755-$ or US-7261308-$ or US-5704627-$ or US-5794951-$ or US-5647601-$ or US-2453631-$ or US-6443467-$ or US-8205906-$ or US-8262103-$ or US-8336904-$ or US-8371606-$ or US-8251382-$ or US-7377537-$ or US-7320471-$ or US-7032922-$ or US-7367581-$ or US-8029007-$ or US-7699325-$ or US-6827356-$ or US-8398098-$ or US-7766366-$ or US-6286844-$ or US-					

		6513827-$ or US-8764048-$ or US-8061732-$).did. or (US-8733784-$ or US-8696016-$ or US-8231136-$ or US-8458880-$ or US-7249779-$ or US-7311323-$ or US-8444171-$ or US-8033554-$ or US-7681894-$ or US-8955869-$ or US-8905427-$ or US-8882134-$ or US-8029014-$ or US-7789402-$ or US-7658399-$ or US-5167425-$ or US-8936261-$ or US-9010773-$ or US-9119483-$ or US-9200746-$ or US-9199659-$ or US-9108659-$ or US-9073563-$ or US-9242665-$ or US-7401803-$ or US-9227650-$ or US-9260128-$).did. or (US-9260127-$ or US-8857830-$ or US-2769482-$ or US-4542915-$ or US-6715783-$).did. or (US-3000645-$ or US-2453631-$).did.					
L351	4	L349 not L350	(US-PGPUB; USPAT; USOCR; FPRS; EPO; JPO)	OR	ON	ON	2017/06/12 09:41 AM
L352	34	(Zehfuss near2 Mark).in.	(US-PGPUB; USPAT; USOCR; FPRS; EPO; JPO)	OR	ON	ON	2017/06/12 09:44 AM
L353	96	("1269379" | "1707186" | "1890469" | "20020158444" | "20040251063" | "20070045975" | "20080122200" | "20080224451" | "20090115151" | "20090160162" | "20090289440" | "20100038887" | "20100140902" | "20110175330" | "20140265258" |	(US-PGPUB; USPAT; USOCR)	OR	ON	ON	2017/06/12 09:46 AM

		"3053493" | "3223431" | "3612603" | "3726536" | "4222132" | "4349938" | "4391453" | "4403807" | "4684148" | "4725071" | "4805938" | "4834415" | "4834452" | "4858947" | "4872692" | "4969656" | "5018754" | "5033761" | "5064209" | "5167425" | "5221106" | "5230523" | "5338096" | "5522121" | "5653460" | "5664795" | "5772235" | "5887935" | "5918892" | "6086087" | "6099022" | "6267406" | "6357784" | "6361111" | "6375213" | "6431579" | "6527294" | "6536842" | "6585284" | "6676140" | "6679506" | "6752405" | "6843498" | "6935652" | "6938906" | "6938954" | "7025364" | "7364183" | "7367581" | "7516966" | "7597332" | "7896384" | "8128103" | "8157273" | "8220822" | "8282120" | "8297642" | "8398143" | "8905427" | "D296540" | "D300310" | "D305316" | "D321850" | "D328047" | "D348489" | "D360392" | "D370437" | "D382516" | "D404344" | "D430512" | "D431212" | "D452191" | "D568794" | "D593458" | "D595621" | "D598333").PN. OR ("9517787").URPN.					
L354	8	"48223173".FMID.	(US-PGPUB; USPAT; FPRS)	OR	ON	ON	2017/06/12 09:47 AM
L355	10	("2013/0113185").URPN.	(USPAT)	OR	ON	ON	2017/06/12 09:48 AM
L356	36	("1486118" | "2769482" | "2993702" | "3253860" | "3497234" | "3612603" | "4155588" | "4181356" | "4288124" | "4381870" | "4596405" | "4632409" | "4711489" | "4813742" | "4946180" | "5161811" | "5201535" | "5213360" | "5374073" | "5401076" | "5547205" | "5848797"	(US-PGPUB; USPAT; USOCR)	OR	ON	ON	2017/06/12 09:52 AM

		| "5988657" | "6135479" | "6276709" | "D340140").PN. OR ("6561526").URPN.					
L357	22	("1707186").URPN.	(USPAT)	OR	ON	ON	2017/06/12 09:53 AM
L358	0	L350 and (cover$4 same door)	(US-PGPUB; USPAT; USOCR; FPRS; EPO; JPO)	OR	ON	ON	2017/06/12 09:56 AM
L359	0	L350 and (cover$4 same2 door)	(US-PGPUB; USPAT; USOCR; FPRS; EPO; JPO)	OR	ON	ON	2017/06/12 10:00 AM
L360	17	L350 and (cover$4 same attach$4)	(US-PGPUB; USPAT; USOCR; FPRS; EPO; JPO)	OR	ON	ON	2017/06/12 10:00 AM
L361	1	("7377537").PN.	(US-PGPUB; USPAT; USOCR)	OR	ON	ON	2017/06/12 10:08 AM
L362	56	("4836573" | "4892327" | "5028061" | "5069474" | "5257799" | "5460430" | "5887935" | "5921574" | "6099022" | "6523853" | "6594840" | "6739649" | "7281732").PN. OR ("7377537").URPN.	(US-PGPUB; USPAT; USOCR)	OR	ON	ON	2017/06/12 10:08 AM
L363	3	L349 and door	(US-PGPUB; USPAT; USOCR; FPRS; EPO; JPO)	OR	ON	ON	2017/06/12 10:13 AM
L364	1	("9517787").PN.	(US-PGPUB; USPAT; USOCR)	OR	ON	ON	2017/06/12 10:19 AM
L365	1	("9517789").PN.	(US-PGPUB; USPAT; USOCR)	OR	ON	ON	2017/06/12 10:20 AM
L366	1	("9561817").PN.	(US-PGPUB; USPAT; USOCR)	OR	ON	ON	2017/06/12 10:20 AM
L367	1	("9493179").PN.	(US-PGPUB; USPAT; USOCR)	OR	ON	ON	2017/06/12 10:21 AM
L368	3453	(B62B7/008,00,006,14, 142,145).CPC.	(US-PGPUB; USPAT; USOCR; FPRS; EPO; JPO)	OR	ON	ON	2017/06/12 10:22 AM
L369	2353	(B62B9/12,28,102).CPC.	(US-PGPUB; USPAT; USOCR; FPRS; EPO; JPO)	OR	ON	ON	2017/06/12 10:22 AM
L370	5004	L368 or L369	(US-PGPUB; USPAT; USOCR; FPRS; EPO; JPO)	OR	ON	ON	2017/06/12 10:22 AM
L371	23	L370 and (cover$4 same door)	(US-PGPUB; USPAT; USOCR; FPRS; EPO; JPO)	OR	ON	ON	2017/06/12 10:22 AM
L372	5	L370 and (cavit$3 same door)	(US-PGPUB; USPAT; USOCR; FPRS; EPO; JPO)	OR	ON	ON	2017/06/12 10:23 AM
L373	35	("2917316" | "2993702"	(US-PGPUB; USPAT;	OR	ON	ON	2017/06/12

		| "3110504" | "3248125" | "3309101" | "5579556" | "5622375" | "5664795" | "5725238" | "6086087" | "6276759" | "6312005" | "D319493" | "D444738" | "D450265").PN. OR ("6447001").URPN.	USOCR)				10:23 AM
L374	40	L370 and (cavit$3 same cover$4)	(US-PGPUB; USPAT; USOCR; FPRS; EPO; JPO)	OR	ON	ON	2017/06/12 10:24 AM
L375	1	("5522121").PN.	(US-PGPUB; USPAT; USOCR)	OR	ON	ON	2017/06/12 10:28 AM
L376	25	("0461069" | "1318850" | "1352647" | "1688148" | "1707186" | "4805938").PN. OR ("5522121").URPN.	(US-PGPUB; USPAT; USOCR)	OR	ON	ON	2017/06/12 10:29 AM
L377	1	("6449801").PN.	(US-PGPUB; USPAT; USOCR)	OR	ON	ON	2017/06/12 10:29 AM
L378	1	("20070114738").PN.	(US-PGPUB; USPAT; USOCR)	OR	ON	ON	2017/06/12 10:30 AM
L379	2	"38052732".FMID.	(US-PGPUB; USPAT; FPRS)	OR	ON	ON	2017/06/12 10:30 AM
L380	41	("20010033069" | "20020135142" | "20030025304" | "20030127835" | "20040164510" | "20070090619" | "5463853" | "5622375" | "5625923" | "5725238" | "5882022" | "5909887" | "5967190" | "6098492" | "6422634" | "6447001" | "6453921" | "6530591" | "6540238" | "6557878" | "6698772" | "6827356" | "6893028" | "7159829" | "7290776").PN. OR ("8029007").URPN.	(US-PGPUB; USPAT; USOCR)	OR	ON	ON	2017/06/12 10:30 AM
L381	13	("20040164510" | "20070090619" | "20120098237" | "20130234419" | "20130264787" | "20160001805" | "3061328" | "5622375" | "6422634" | "6530591" | "7004272" | "8029007").PN. OR ("9545941").URPN.	(US-PGPUB; USPAT; USOCR)	OR	ON	ON	2017/06/12 10:31 AM
L382	91	("1239498" | "1322788" | "1418929" | "1832770"	(US-PGPUB; USPAT; USOCR)	OR	ON	ON	2017/06/12 10:33 AM

		| "20020125662" | "20040011884" | "20050253348" | "20050253431" | "20050264064" | "20060290107" | "20070001410" | "20070075510" | "20070114738" | "20070257526" | "20080042476" | "20090072520" | "20090302556" | "20090302578" | "20100032925" | "20100072731" | "20100109270" | "20100109293" | "20100140902" | "20100148553" | "20100314925" | "20110074195" | "20110101742" | "20110115264" | "20120080244" | "20130154215" | "3173396" | "3831960" | "4310167" | "4433869" | "4893826" | "4936629" | "5022669" | "5158319" | "5301968" | "5417449" | "5556118" | "5581843" | "5653460" | "5664795" | "5722594" | "6086087" | "6135222" | "6267406" | "6312005" | "6394470" | "6454286" | "6540239" | "6698788" | "6702306" | "6935652" | "6938906" | "7059625" | "7261308" | "7338122" | "7481439" | "7497449" | "7559606" | "7597332" | "7740313" | "7770970" | "7780184" | "7789413" | "7832756" | "7854435" | "7887129" | "7891732" | "7938433" | "7971897" | "7992889" | "8029007" | "8070179" | "8128119" | "8157273" | "8262107" | "8276935" | "D326748" | "D431798").PN. OR ("8882134").URPN.					
L383	42	("0522608" | "1707186" | "3223431" | "3524655" | "3997180" | "4620686" | "4632409" | "4836573"	(US-PGPUB; USPAT; USOCR)	OR	ON	ON	2017/06/12 10:46 AM

		| "6267406" | "6752405" | "7364183").PN. OR ("8157273").URPN.					
L384	15	("20050242548" | "20070052271" | "4518139" | "4681340" | "6022077" | "6536842").PN. OR ("7364183").URPN.	(US-PGPUB; USPAT; USOCR)	OR	ON	ON	2017/06/12 10:49 AM
L385	1	("6286844").PN.	(US-PGPUB; USPAT; USOCR)	OR	ON	ON	2017/06/12 12:09 PM
L386	119	("1727335" | "2435733" | "2508905" | "2509103" | "2574743" | "2722966" | "2805076" | "2864429" | "3083997" | "3116069" | "3549164" | "3829113" | "4108468" | "4412689" | "4537414" | "4570956" | "4697845" | "4743063" | "4750783" | "4762331" | "4768795" | "4786064" | "4822064" | "4832354" | "4834403" | "4861105" | "4874182" | "4915401" | "4921261" | "5121940" | "5133567" | "5197753" | "5201535" | "5203577" | "5234224" | "5265931" | "5364137" | "5375869" | "5385386" | "5499831" | "5527096" | "5564778" | "5567008" | "5601297" | "5676386" | "5707106" | "5727798" | "5772279" | "5865447" | "5876046" | "5974555").PN. OR ("6286844").URPN.	(US-PGPUB; USPAT; USOCR)	OR	ON	ON	2017/06/12 12:13 PM
L387	91	("0706448" | "1480451" | "1508500" | "1952467" | "20010013689" | "20040212161" | "20060085953" | "20070085302" | "20070120404" | "20090029784" | "20090181780" | "20110278810" | "20120023662" | "20120060326" | "20120235450" | "20130334781" | "20140042729" | "20150008659" | "20150042056" | "20150042076" | "20150175189" |	(US-PGPUB; USPAT; USOCR)	OR	ON	ON	2017/06/12 12:16 PM

		"2708585" | "2961248" | "3564626" | "4476649" | "5099528" | "5201535" | "5562548" | "5676386" | "5772279" | "5846136" | "5947555" | "5987665" | "5988670" | "6250654" | "6286844" | "6471597" | "6671926" | "6872146" | "6893040" | "7037205" | "7100724" | "7354352" | "7377537" | "7445559" | "7475942" | "7497461" | "7607734" | "7681894" | "7686323" | "7694996" | "7766366" | "7905791" | "7938435" | "8029014" | "8251382" | "8292750" | "8550556" | "8672341" | "8746794" | "8851505" | "8944927" | "8955869" | "9085312" | "D156930" | "D371094" | "D377466" | "D408768" | "D442895" | "D452195" | "D475951" | "D481976" | "D498713" | "D498714" | "D519063" | "D604055" | "D622640" | "D623429" | "D667229" | "D682562" | "D684789" | "D687352" | "D743304").PN. OR ("9421992").URPN.					
L388	20	("20010040357" | "20080106070" | "20100127480" | "20110181026" | "20160144879" | "5257799" | "5645293" | "6102432" | "6312005" | "7281732" | "7641216" | "8141895" | "8240698" | "8585075" | "8696015" | "8696016" | "8998241" | "9050993" | "9421991" | "9540028").PN. OR ("9637155").URPN.	(US-PGPUB; USPAT; USOCR)	OR	ON	ON	2017/06/12 12:16 PM
L389	9	("20120326474" | "4306749" | "4634177" | "4915446" | "5947556" | "6286844" | "6595583" | "8251382" | "8678498").PN. OR ("9346378").URPN.	(US-PGPUB; USPAT; USOCR)	OR	ON	ON	2017/06/12 12:21 PM
L390	9	("20120326474" |	(US-PGPUB; USPAT;	OR	ON	ON	2017/06/12

		"4306749" | "4634177" | "4915446" | "5947556" | "6286844" | "6595583" | "8251382" | "8678498").PN. OR ("9346378").URPN.	USOCR)				12:54 PM
L391	28	("20030015895" | "20090066130" | "20090295207" | "4306749" | "4750783" | "5385387" | "5478135" | "5562548" | "5586351" | "5997098" | "6017088" | "6170911" | "6299249" | "6331032" | "6336682" | "6347832" | "6428099" | "6428100" | "6443522" | "6554358" | "6705676" | "6793280" | "6921359" | "6979057" | "7090294").PN. OR ("8678498").URPN.	(US-PGPUB; USPAT; USOCR)	OR	ON	ON	2017/06/12 12:55 PM
L392	54	("20080150247" | "20080179848" | "20080224451" | "20080303232" | "20090102162" | "20090121455" | "20090256323" | "20100001492" | "20100109272" | "20100127480" | "4645371" | "5028061" | "5257799" | "5364137" | "5676386" | "5772279" | "5865447" | "5947555" | "6286844" | "6446990" | "6513827" | "6991248" | "7032922" | "7296820" | "7314247" | "7367581" | "7377537" | "7584985" | "7658399" | "7681894" | "7686323" | "7694996" | "7712765" | "7753398").PN. OR ("8251382").URPN.	(US-PGPUB; USPAT; USOCR)	OR	ON	ON	2017/06/12 01:08 PM
L393	15	("20080231022" | "5773379" | "5947555" | "6286844" | "6893040" | "7032922" | "7267359" | "7475900" | "7658399" | "7681894" | "7766366" | "7938435" | "8033555" | "D621306").PN. OR ("8851505").URPN.	(US-PGPUB; USPAT; USOCR)	OR	ON	ON	2017/06/12 01:09 PM
L394	58	("20010013689" | "20050264062" |	(US-PGPUB; USPAT; USOCR)	OR	ON	ON	2017/06/12 01:09 PM

		"20060214397" | "20070257458" | "20070296182" | "20080136127" | "20080231023" | "20100219616" | "20100230933" | "20120025492" | "4834403" | "5028061" | "5201535" | "5203577" | "5257799" | "5277472" | "5364137" | "5564778" | "5567008" | "5676386" | "5772279" | "5794951" | "5947555" | "6086086" | "6089653" | "6286844" | "6318807" | "6446990" | "6572134" | "6595583" | "6793280" | "6802514" | "6863286" | "6942294" | "6983986" | "7032922" | "7070197" | "7207628" | "7370913" | "7377537" | "7681894" | "7686322" | "7694996" | "7753398" | "8029014" | "8070228" | "8172253" | "8282120" | "8382150").PN. OR ("8651502").URPN.					
L395	76	("3779655" | "4191397" | "4216974" | "4412688" | "4602889" | "4634177" | "4645371" | "4834403" | "5028061" | "5257799" | "5527096" | "5772279" | "5865447" | "6286844").PN. OR ("6513827").URPN.	(US-PGPUB; USPAT; USOCR)	OR	ON	ON	2017/06/12 01:12 PM
L396	49	("4915401" | "5133567" | "5277472" | "5564778" | "5644816" | "5676386" | "5772279").PN. OR ("5865447").URPN.	(US-PGPUB; USPAT; USOCR)	OR	ON	ON	2017/06/12 01:13 PM
L397	88	("0763771" | "0921361" | "1167525" | "2509972" | "2982562" | "3029087" | "3083997" | "3596986" | "4306749" | "4345791" | "4371206" | "4385769" | "4501032" | "4545613" | "4634177" | "4664396" | "4733909" | "4861105" | "4915446" | "4943113" | "4984813" | "4998307" | "5052750" | "5058283" | "5203577" | "5277472" | "5385387" | "D294777"	(US-PGPUB; USPAT; USOCR)	OR	ON	ON	2017/06/12 01:14 PM

		| "D305583" | "D322001" | "D325132").PN. OR ("5567008").URPN.					
L398	92	("2982562" | "3100651" | "3290050" | "3330575" | "3784252" | "4072318" | "4378946" | "4412688" | "4428598" | "4478427" | "4606550" | "4762364" | "4815764" | "5004253" | "5074575").PN. OR ("5201535").URPN.	(US-PGPUB; USPAT; USOCR)	OR	ON	ON	2017/06/12 01:16 PM
L399	119	("1727335" | "2435733" | "2508905" | "2509103" | "2574743" | "2722966" | "2805076" | "2864429" | "3083997" | "3116069" | "3549164" | "3829113" | "4108468" | "4412689" | "4537414" | "4570956" | "4697845" | "4743063" | "4750783" | "4762331" | "4768795" | "4786064" | "4822064" | "4832354" | "4834403" | "4861105" | "4874182" | "4915401" | "4921261" | "5121940" | "5133567" | "5197753" | "5201535" | "5203577" | "5234224" | "5265931" | "5364137" | "5375869" | "5385386" | "5499831" | "5527096" | "5564778" | "5567008" | "5601297" | "5676386" | "5707106" | "5727798" | "5772279" | "5865447" | "5876046" | "5974555").PN. OR ("6286844").URPN.	(US-PGPUB; USPAT; USOCR)	OR	ON	ON	2017/06/12 01:23 PM
L400	82	L397 not L399	(US-PGPUB; USPAT; USOCR)	OR	ON	ON	2017/06/12 01:23 PM
L401	20	("20040164593" | "3145442" | "5865447" | "5947555" | "6446314" | "7032922").PN. OR ("7681894").URPN.	(US-PGPUB; USPAT; USOCR)	OR	ON	ON	2017/06/12 01:28 PM
L402	59	("20020175498" | "20020195797" | "20030111825" | "20040046364" | "20050098982" | "20060071452" | "20060237949" | "5772235" | "5823564" | "7032922").PN. OR	(US-PGPUB; USPAT; USOCR)	OR	ON	ON	2017/06/12 01:30 PM

		("7267359").URPN.					
L403	1	("5201535").PN.	(US-PGPUB; USPAT; USOCR)	OR	ON	ON	2017/06/12 01:32 PM
L404	1	("6286844").PN.	(US-PGPUB; USPAT; USOCR)	OR	ON	ON	2017/06/12 01:47 PM
L405	3477	(B62B7/008,00,006,14,142,145).CPC.	(US-PGPUB; USPAT; USOCR; FPRS; EPO; JPO)	OR	ON	ON	2017/11/13 04:13 PM
L406	2369	(B62B9/12,28,102).CPC.	(US-PGPUB; USPAT; USOCR; FPRS; EPO; JPO)	OR	ON	ON	2017/11/13 04:13 PM
L407	5040	L405 or L406	(US-PGPUB; USPAT; USOCR; FPRS; EPO; JPO)	OR	ON	ON	2017/11/13 04:13 PM
L408	1329175	@pd>="20170608"	(US-PGPUB; USPAT; USOCR; FPRS; EPO; JPO)	OR	ON	ON	2017/11/13 04:16 PM
L409	44	L407 and L408	(US-PGPUB; USPAT; USOCR; FPRS; EPO; JPO)	OR	ON	ON	2017/11/13 04:16 PM
L410	3	"37808038".FMID.	(US-PGPUB; USPAT; FPRS)	OR	ON	ON	2017/11/13 05:27 PM
L423	1	("20180201293").PN.	(US-PGPUB; USPAT; USOCR)	OR	OFF	OFF	2019/04/15 10:50 AM
L424	39	(Zehfuss near2 Mark).in.	(US-PGPUB; USPAT; USOCR; FPRS; EPO; JPO)	OR	ON	ON	2019/04/15 10:51 AM
L425	8	(Lee near2 (Jon and Hee)).in.	(US-PGPUB; USPAT; USOCR; FPRS; EPO; JPO; DERWENT)	OR	ON	ON	2019/04/15 10:52 AM
L426	18	(Roe near2 Megan).in.	(US-PGPUB; USPAT; USOCR; FPRS; EPO; JPO; DERWENT)	OR	ON	ON	2019/04/15 10:52 AM
L427	3	(Simpson near2 (Stacy and Noel)).in.	(US-PGPUB; USPAT; USOCR; FPRS; EPO; JPO; DERWENT)	OR	ON	ON	2019/04/15 10:52 AM
L428	151	(US-20100052277-$ or US-20070114738-$ or US-20070001429-$ or US-20060290107-$ or US-20030075903-$ or US-20080303232-$ or US-20070085303-$ or US-20060131841-$ or US-20060001226-$ or US-20080224451-$ or US-20010033069-$ or US-20030025304-$ or US-20070187914-$ or US-20070069505-$ or US-20080231022-$ or US-20100301585-$ or US-20100013281-$ or	(US-PGPUB; USPAT; USOCR)	OR	ON	ON	2019/04/15 11:03 AM

		US-20150360709-$ or US-20070069504-$ or US-20100072732-$ or US-20090302578-$ or US-20130113188-$ or US-20130049331-$ or US-20160001805-$ or US-20040164593-$ or US-20070075525-$).did. or (US-5338096-$ or US-6045145-$ or US-3223431-$ or US-6378892-$ or US-5653460-$ or US-6209892-$ or US-5201535-$ or US-4620711-$ or US-6676140-$ or US-6017051-$ or US-1707186-$ or US-7475900-$ or US-D508443-$ or US-7497461-$ or US-4570956-$ or US-6923467-$ or US-6752405-$ or US-8157273-$ or US-7896384-$ or US-7677585-$ or US-8128103-$ or US-7597332-$ or US-7481439-$ or US-6851693-$ or US-5848797-$ or US-3000645-$).did. or (US-8070180-$ or US-7832755-$ or US-7261308-$ or US-5704627-$ or US-5794951-$ or US-5647601-$ or US-2453631-$ or US-6443467-$ or US-8205906-$ or US-8262103-$ or US-8336904-$ or US-8371606-$ or US-8251382-$ or US-7377537-$ or US-7320471-$ or US-7032922-$ or US-7367581-$ or US-8029007-$ or US-7699325-$ or US-6827356-$ or US-8398098-$ or US-7766366-$ or US-6286844-$ or US-					

		6513827-$ or US- 8764048-$ or US- 8061732-$ or US- 8733784-$).did. or (US- 8696016-$ or US- 8231136-$ or US- 8458880-$ or US- 7249779-$ or US- 7311323-$ or US- 8444171-$ or US- 8033554-$ or US- 7681894-$ or US- 8955869-$ or US- 8905427-$ or US- 8882134-$ or US- 8029014-$ or US- 7789402-$ or US- 7658399-$ or US- 5167425-$ or US- 8936261-$ or US- 9010773-$ or US- 9119483-$ or US- 9200746-$ or US- 9199659-$ or US- 9108659-$ or US- 9073563-$ or US- 9242665-$ or US- 7401803-$ or US- 9227650-$ or US- 9260128-$ or US- 9260127-$).did. or (US- 8857830-$ or US- 2769482-$ or US- 4542915-$ or US- 6715783-$ or US- 9108654-$ or US- 9630642-$ or US- 9517787-$ or US- 9327752-$ or US- 6561526-$ or US- 8967171-$ or US- 9517789-$ or US- 9561817-$ or US- 5522121-$ or US- 9545941-$ or US- 9056622-$ or US- 9403550-$ or US- 8899615-$ or US- 7364183-$ or US- 9637155-$ or US- 9421992-$ or US- 9545940-$ or US- 9346378-$ or US- 8678498-$ or US- 4915446-$ or US- 4634177-$ or US- 4306749-$ or US- 8851505-$).did. or (US-				

		8651502-$ or US-6893040-$ or US-6446990-$ or US-5865447-$ or US-5772279-$ or US-5567008-$ or US-8657326-$ or US-8491000-$ or US-6155740-$ or US-5947555-$ or US-7267359-$ or US-9776652-$ or US-9771095-$ or US-9725106-$ or US-9701333-$).did. or (US-3000645-$ or US-2453631-$ or US-1707186-$).did.					
L429	55	L424 L425 L426 L427	(US-PGPUB; USPAT; USOCR; FPRS; EPO; JPO)	OR	ON	ON	2019/04/15 12:25 PM
L430	3	L424 L425 L426 L427	(US-PGPUB; USPAT; USOCR; FPRS; EPO; JPO)	AND	ON	ON	2019/04/15 12:25 PM
L431	80	("1707186" | "20010033069" | "20020109321" | "20060001226" | "20060131841" | "20060290107" | "20070090619" | "20080224451" | "20080231022" | "20090302578" | "20140191483" | "20160046315" | "3000645" | "4542915" | "5201535" | "5338096" | "5567008" | "6045145" | "6209892" | "6286844" | "6378892" | "6443467" | "6513827" | "6561526" | "6676140" | "6752405" | "6851693" | "6923467" | "7249779" | "7311323" | "7320471" | "7367581" | "7377537" | "7401803" | "7475900" | "7481439" | "7497461" | "7677585" | "7681894" | "7766366" | "7832755" | "7896384" | "7938435" | "8029007" | "8029014" | "8033554" | "8061732" | "8157273" | "8231136" | "8251382" | "8262103" | "8336904" | "8444171" | "8458880" |	(US-PGPUB; USPAT; USOCR)	OR	ON	ON	2019/04/15 12:26 PM

		"8585075" | "8596670" | "8696016" | "8733784" | "8764048" | "8882134" | "8905427" | "8936261" | "9010773" | "9108654" | "9108659" | "9119483" | "9199659" | "9200746" | "9227650" | "9242665" | "9260127" | "9260128" | "9517787" | "9561817" | "9701333" | "9725106" | "9771095" | "9776652").PN. OR ("9944305").URPN.					
L432	3809	(B62B7/008,00,006,14,142,145).CPC.	(US-PGPUB; USPAT; USOCR; FPRS; EPO; JPO)	OR	ON	ON	2019/04/15 12:29 PM
L433	2627	(B62B9/12,28,102).CPC.	(US-PGPUB; USPAT; USOCR; FPRS; EPO; JPO)	OR	ON	ON	2019/04/15 12:29 PM
L434	5496	L432 or L433	(US-PGPUB; USPAT; USOCR; FPRS; EPO; JPO)	OR	ON	ON	2019/04/15 12:29 PM
L435	7949590	@pd>="20171113"	(US-PGPUB; USPAT; USOCR; FPRS; EPO; JPO)	OR	ON	ON	2019/04/15 12:29 PM
L436	308	L434 and L435	(US-PGPUB; USPAT; USOCR; FPRS; EPO; JPO)	OR	ON	ON	2019/04/15 12:30 PM
L437	2	("20100140902"|"20140333039").PN.	(US-PGPUB; USPAT; USOCR)	OR	ON	ON	2019/04/15 12:52 PM
L438	84	("1707186"|"20010033069"|"20020109321"|"20030025304"|"20060001226"|"20060131841"|"20060290107"|"20070001429"|"20070085303"|"20070090619"|"20070114738"|"20080224451"|"20080231022"|"20090302578"|"20140191483"|"20160046315"|"3000645"|"4542915"|"5201535"|"5338096"|"5567008"|"6045145"|"6209892"|"6286844"|"6378892"|"6443467"|"6513827"|"6561526"|"6676140"|"6752405"|"6851693"|"6923467"|"7249779"|"7311323"|"7320471"|"7367581"|"7377537"|"7401803"|"7475900"|"7481439"|"7497461"|"7677585"|"7681894"|"7766366"|"7832755"|"7896384"|"79	(US-PGPUB; USPAT; USOCR)	OR	ON	ON	2019/04/15 12:54 PM

		38435"|"8029007"|"8029014"|"8033554"|"8061732"|"8157273"|"8231136"|"8251382"|"8262103"|"8336904"|"8444171"|"8458880"|"8585075"|"8596670"|"8696016"|"8733784"|"8764048"|"8882134"|"8905427"|"8936261"|"9010773"|"9108654"|"9108659"|"9119483"|"9199659"|"9200746"|"9227650"|"9242665"|"9260127"|"9260128"|"9517787"|"9561817"|"9701333"|"9725106"|"9771095"|"9776652").PN.					
L439	7	L438 not L428	(US-PGPUB; USPAT; USOCR)	OR	ON	ON	2019/04/15 12:55 PM
L440	11	("20060214395" | "20070085303" | "20090302578" | "4763911" | "5356172" | "5395154" | "5593173" | "6431647").PN. OR ("8596670").URPN.	(US-PGPUB; USPAT; USOCR)	OR	ON	ON	2019/04/15 12:58 PM
L441	12	("2007/0085303").URPN.	(USPAT)	OR	ON	ON	2019/04/15 01:05 PM
L443	1	("7475900").PN.	(US-PGPUB; USPAT; USOCR)	OR	OFF	OFF	2019/04/15 02:37 PM
L444	1	("7377537").PN.	(US-PGPUB; USPAT; USOCR)	OR	OFF	OFF	2019/04/15 02:47 PM
L445	1	("7677585").PN.	(US-PGPUB; USPAT; USOCR)	OR	OFF	OFF	2019/04/28 11:08 PM
L446	1	("7481439").PN.	(US-PGPUB; USPAT; USOCR)	OR	OFF	OFF	2019/04/28 11:09 PM
L447	21	("4222132" | "4805938" | "4969656" | "5064209" | "5653460" | "5887935" | "5918892" | "6155592" | "6523840" | "6527294" | "6752405" | "D360392").PN. OR ("7481439").URPN.	(US-PGPUB; USPAT; USOCR)	OR	ON	ON	2019/04/28 11:10 PM
L448	94	("1239498" | "1322788" | "1418929" | "1832770" | "20020125662" | "20040011884" | "20050253348" | "20050253431" | "20050264064" | "20060290107" | "20070001410" | "20070075510" | "20070114738" |	(US-PGPUB; USPAT; USOCR)	OR	ON	ON	2019/04/28 11:10 PM

		"20070257526" | "20080042476" | "20090072520" | "20090302556" | "20090302578" | "20100032925" | "20100072731" | "20100109270" | "20100109293" | "20100140902" | "20100148553" | "20100314925" | "20110074195" | "20110101742" | "20110115264" | "20120080244" | "20130154215" | "3173396" | "3831960" | "4310167" | "4433869" | "4893826" | "4936629" | "5022669" | "5158319" | "5301968" | "5417449" | "5556118" | "5581843" | "5653460" | "5664795" | "5722594" | "6086087" | "6135222" | "6267406" | "6312005" | "6394470" | "6454286" | "6540239" | "6698788" | "6702306" | "6935652" | "6938906" | "7059625" | "7261308" | "7338122" | "7481439" | "7497449" | "7559606" | "7597332" | "7740313" | "7770970" | "7780184" | "7789413" | "7832756" | "7854435" | "7887129" | "7891732" | "7938433" | "7971897" | "7992889" | "8029007" | "8070179" | "8128119" | "8157273" | "8262107" | "8276935" | "D326748" | "D431798").PN. OR ("8882134").URPN.					
L449	28	("1707186" | "4222132" | "4288089" | "4354689" | "4805938" | "4969656" | "5064209" | "5076599" | "5522121" | "5653460" | "5918892" | "6086087" | "6527294" | "6752405").PN. OR ("6938906").URPN.	(US-PGPUB; USPAT; USOCR)	OR	ON	ON	2019/04/28 11:13 PM
L450	56	("20030080536" | "20040075229" | "20040124611" |	(US-PGPUB; USPAT; USOCR)	OR	ON	ON	2019/04/28 11:14 PM

		"20040173997" | "20050127640" | "20050242549" | "20090295128" | "20100038886" | "20100230933" | "4697823" | "4846494" | "4921261" | "4946180" | "5121940" | "5338096" | "5454575" | "5624152" | "5669623" | "5687984" | "5752738" | "6189914" | "6193263" | "6209892" | "6267406" | "6409205" | "6478327" | "6702316" | "6938906" | "6964429" | "6981709" | "7017937" | "7040694" | "7284797" | "7445230" | "7513512" | "7614640" | "7770911" | "8087680" | "8100429" | "8186705" | "8186706" | "8205894" | "8282119" | "8328208" | "8388016" | "8398098" | "8414012" | "D344474" | "D345128" | "D352923" | "D430076" | "D452192" | "D455679" | "D510549" | "D593459").PN. OR ("8641077").URPN.					
L451	32	("6896286" | "D369992" | "D519422" | "D558099" | "D566013" | "D578045" | "D579827").PN. OR ("D593459").URPN.	(US-PGPUB; USPAT; USOCR)	OR	ON	ON	2019/04/28 11:15 PM
L452	66	("20020093177" | "20020109320" | "20030075903" | "20030080536" | "20030111825" | "20040032103" | "20040094922" | "20040124610" | "20040124611" | "20040245747" | "20050093259" | "20050127640" | "20050242535" | "20050242549" | "20060119079" | "20070001429" | "20070108710" | "20070194545" | "20080157491" |	(US-PGPUB; USPAT; USOCR)	OR	ON	ON	2019/04/28 11:18 PM

		"20090127827" | "5333893" | "5676386" | "5772279" | "5794951" | "5833261" | "5947555" | "6086087" | "6209892" | "6286844" | "6331032" | "6398233" | "6409205" | "6513827" | "6530591" | "6626452" | "6641164" | "6702316" | "6793280" | "6802514" | "6863286" | "6893031" | "6923467" | "6983986" | "6986518" | "7017921" | "7032922" | "7070197" | "7370913" | "7377537" | "7419181" | "7445229" | "7475900" | "7513512" | "7600775" | "7614641" | "7938435" | "D430076").PN. OR ("8328208").URPN.					
L453	1	("D593459").PN.	(US-PGPUB; USPAT; USOCR)	OR	OFF	OFF	2019/04/28 11:25 PM
L454	3861	(B62B7/008,00,006,14,142,145).CPC.	(US-PGPUB; USPAT; USOCR; FPRS; EPO; JPO)	OR	ON	ON	2019/08/23 12:51 AM
L455	2688	(B62B9/12,28,102).CPC.	(US-PGPUB; USPAT; USOCR; FPRS; EPO; JPO)	OR	ON	ON	2019/08/23 12:51 AM
L456	5586	L454 or L455	(US-PGPUB; USPAT; USOCR; FPRS; EPO; JPO)	OR	ON	ON	2019/08/23 12:51 AM
L457	969007	@pd>="20190415"	(US-PGPUB; USPAT; USOCR; FPRS; EPO; JPO)	OR	ON	ON	2019/08/23 12:57 AM
L458	58	L456 and L457	(US-PGPUB; USPAT; USOCR; FPRS; EPO; JPO)	OR	ON	ON	2019/08/23 12:59 AM
L459	27	("20040189076"|"20050029855"|"20110175306"|"20170247044"|"20170361861"|"4577355"|"5240265"|"5246272"|"5669625"|"5681084"|"5749627"|"5806877"|"6322097"|"6530591"|"6676140"|"6830254"|"6951342"|"8070180"|"8172322"|"8596670"|"8616638"|"8690250"|"8899615"|"8991929"|"9227650"|"9868456"|"D811949").PN.	(US-PGPUB; USPAT; USOCR)	OR	ON	ON	2019/08/23 01:02 AM
L460	167	(US-20100052277-$ or US-20070114738-$ or US-20070001429-$ or	(US-PGPUB; USPAT; USOCR)	OR	ON	ON	2019/08/23 01:02 AM

		US-20060290107-$ or US-20030075903-$ or US-20080303232-$ or US-20070085303-$ or US-20060131841-$ or US-20060001226-$ or US-20080224451-$ or US-20010033069-$ or US-20030025304-$ or US-20070187914-$ or US-20070069505-$ or US-20080231022-$ or US-20100301585-$ or US-20100013281-$ or US-20150360709-$ or US-20070069504-$ or US-20100072732-$ or US-20090302578-$ or US-20130113188-$ or US-20130049331-$ or US-20160001805-$ or US-20040164593-$ or US-20070075525-$).did. or (US-5338096-$ or US-6045145-$ or US-3223431-$ or US-6378892-$ or US-5653460-$ or US-6209892-$ or US-5201535-$ or US-4620711-$ or US-6676140-$ or US-6017051-$ or US-1707186-$ or US-7475900-$ or US-7938435-$ or US-D508443-$ or US-7497461-$ or US-4570956-$ or US-6923467-$ or US-6752405-$ or US-8157273-$ or US-7896384-$ or US-7677585-$ or US-8128103-$ or US-7597332-$ or US-7481439-$ or US-6851693-$ or US-5848797-$).did. or (US-3000645-$ or US-8070180-$ or US-7832755-$ or US-7261308-$ or US-5704627-$ or US-5794951-$ or US-5647601-$ or US-2453631-$ or US-6443467-$ or US-					

		8205906-$ or US- 8262103-$ or US- 8336904-$ or US- 8371606-$ or US- 8251382-$ or US- 7377537-$ or US- 7320471-$ or US- 7032922-$ or US- 7367581-$ or US- 8029007-$ or US- 7699325-$ or US- 6827356-$ or US- 8398098-$ or US- 7766366-$ or US- 6286844-$ or US- 6513827-$ or US- 8764048-$ or US- 8061732-$).did. or (US- 8733784-$ or US- 8696016-$ or US- 8231136-$ or US- 8458880-$ or US- 7249779-$ or US- 7311323-$ or US- 8444171-$ or US- 8033554-$ or US- 7681894-$ or US- 8955869-$ or US- 8905427-$ or US- 8882134-$ or US- 8029014-$ or US- 7789402-$ or US- 7658399-$ or US- 5167425-$ or US- 8936261-$ or US- 9010773-$ or US- 9119483-$ or US- 9200746-$ or US- 9199659-$ or US- 9108659-$ or US- 9073563-$ or US- 9242665-$ or US- 7401803-$ or US- 9227650-$ or US- 9260128-$).did. or (US- 9260127-$ or US- 8857830-$ or US- 2769482-$ or US- 4542915-$ or US- 6715783-$ or US- 9108654-$ or US- 9630642-$ or US- 9517787-$ or US- 9327752-$ or US- 6561526-$ or US- 8967171-$ or US- 9517789-$ or US- 9561817-$ or US-					

		5522121-$ or US-9545941-$ or US-9056622-$ or US-9403550-$ or US-8899615-$ or US-7364183-$ or US-9637155-$ or US-9421992-$ or US-9545940-$ or US-9346378-$ or US-8678498-$ or US-4915446-$ or US-4634177-$ or US-4306749-$).did. or (US-8851505-$ or US-8651502-$ or US-6893040-$ or US-6446990-$ or US-5865447-$ or US-5772279-$ or US-5567008-$ or US-8657326-$ or US-8491000-$ or US-6155740-$ or US-5947555-$ or US-7267359-$ or US-9776652-$ or US-9771095-$ or US-9725106-$ or US-9701333-$ or US-8585075-$ or US-8596670-$ or US-9956979-$ or US-9944305-$ or US-9924806-$ or US-9884640-$ or US-9849903-$ or US-9840168-$ or US-10207731-$ or US-10023218-$ or US-6938906-$).did. or (US-D593459-$ or US-D621306-$ or US-8328208-$ or US-7513512-$).did. or (US-3000645-$ or US-2453631-$ or US-1707186-$).did.					
L461	22	L459 not L460	(US-PGPUB; USPAT; USOCR; FPRS; EPO; JPO)	OR	ON	ON	2019/08/23 01:02 AM
L462	1	("6676140").PN.	(US-PGPUB; USPAT; USOCR)	OR	OFF	OFF	2019/08/23 01:04 AM
L464	4053	(B62B7/008,00,006,14, 142,145).CPC.	(US-PGPUB; USPAT; USOCR; FPRS; EPO; JPO)	OR	ON	ON	2020/02/28 08:49 PM
L465	2834	(B62B9/12,28,102).CP	(US-PGPUB; USPAT;	OR	ON	ON	2020/02/28

		C.	USOCR; FPRS; EPO; JPO)				08:49 PM
L466	5847	L464 or L465	(US-PGPUB; USPAT; USOCR; FPRS; EPO; JPO)	OR	ON	ON	2020/02/28 08:49 PM
L467	1751101	@pd>="20190823"	(US-PGPUB; USPAT; USOCR; FPRS; EPO; JPO)	OR	ON	ON	2020/02/28 09:02 PM
L468	97	L466 and L467	(US-PGPUB; USPAT; USOCR; FPRS; EPO; JPO)	OR	ON	ON	2020/02/28 09:02 PM
L469	97	("1239498" | "1322788" | "1418929" | "1832770" | "20020125662" | "20040011884" | "20050253348" | "20050253431" | "20050264064" | "20060290107" | "20070001410" | "20070075510" | "20070114738" | "20070257526" | "20080042476" | "20080224451" | "20090072520" | "20090302556" | "20090302578" | "20100032925" | "20100072731" | "20100109270" | "20100109293" | "20100140902" | "20100148553" | "20100314925" | "20110074195" | "20110101742" | "20110115264" | "20120080244" | "20120181779" | "20130154215" | "20140191483" | "20150021872" | "3173396" | "3831960" | "4310167" | "4433869" | "4893826" | "4936629" | "5022669" | "5158319" | "5301968" | "5417449" | "5556118" | "5581843" | "5653460" | "5664795" | "5722594" | "6086087" | "6135222" | "6267406" | "6312005" | "6394470" | "6454286" | "6540239" | "6698788" | "6702306" | "6877762" | "6935652" | "6938906" | "6981709" |	(US-PGPUB; USPAT; USOCR)	OR	ON	ON	2020/02/28 09:03 PM

		"7059625" | "7261308" | "7338122" | "7481439" | "7497449" | "7559606" | "7597332" | "7740313" | "7770970" | "7780184" | "7789413" | "7832756" | "7854435" | "7887129" | "7891732" | "7938433" | "7971897" | "7992889" | "8029007" | "8070179" | "8128118" | "8128119" | "8157273" | "8262107" | "8276935" | "8882134" | "9056622" | "9260127" | "D326748" | "D431798").PN. OR ("10556610").URPN.					
L470	21	("20100140902" | "20130087993" | "20130154241" | "20150159414" | "20160046315" | "7789402" | "7832755" | "8033554" | "8231136" | "8602441" | "8905427" | "8955869" | "8967647" | "9050987" | "9399477" | "9403550" | "9493179" | "9517787" | "9616912" | "9637154" | "D747669").PN. OR ("10449987").URPN.	(US-PGPUB; USPAT; USOCR)	OR	ON	ON	2020/02/28 10:17 PM
L471	1	("20180201293").PN.	(US-PGPUB; USPAT; USOCR)	OR	OFF	OFF	2020/02/28 10:19 PM
L472	7365969	@ad<="20081204"	(US-PGPUB; USPAT; USOCR)	OR	ON	ON	2020/03/01 11:01 PM
L473	172	(US-20100052277-$ or US-20070114738-$ or US-20070001429-$ or US-20060290107-$ or US-20030075903-$ or US-20080303232-$ or US-20070085303-$ or US-20060131841-$ or US-20060001226-$ or US-20080224451-$ or US-20010033069-$ or US-20030025304-$ or US-20070187914-$ or US-20070069505-$ or US-20080231022-$ or US-20100301585-$ or US-20100013281-$ or US-20150360709-$ or US-20070069504-$ or US-20100072732-$ or US-20090302578-$ or	(US-PGPUB; USPAT; USOCR)	OR	ON	ON	2020/03/01 11:02 PM

		US-20130113188-$ or US-20130049331-$ or US-20160001805-$ or US-20040164593-$ or US-20070075525-$).did. or (US-20130087993-$).did. or (US-5338096-$ or US-6045145-$ or US-3223431-$ or US-6378892-$ or US-5653460-$ or US-6209892-$ or US-5201535-$ or US-4620711-$ or US-6676140-$ or US-6017051-$ or US-1707186-$ or US-7475900-$ or US-7938435-$ or US-D508443-$ or US-7497461-$ or US-4570956-$ or US-6923467-$ or US-6752405-$ or US-8157273-$ or US-7896384-$ or US-7677585-$ or US-8128103-$ or US-7597332-$ or US-7481439-$ or US-6851693-$ or US-5848797-$).did. or (US-3000645-$ or US-8070180-$ or US-7832755-$ or US-7261308-$ or US-5704627-$ or US-5794951-$ or US-5647601-$ or US-2453631-$ or US-6443467-$ or US-8205906-$ or US-8262103-$ or US-8336904-$ or US-8371606-$ or US-8251382-$ or US-7377537-$ or US-7320471-$ or US-7032922-$ or US-7367581-$ or US-8029007-$ or US-7699325-$ or US-6827356-$ or US-8398098-$ or US-7766366-$ or US-6286844-$ or US-6513827-$ or US-					

		8764048-$ or US- 8061732-$).did. or (US- 8733784-$ or US- 8696016-$ or US- 8231136-$ or US- 8458880-$ or US- 7249779-$ or US- 7311323-$ or US- 8444171-$ or US- 8033554-$ or US- 7681894-$ or US- 8955869-$ or US- 8905427-$ or US- 8882134-$ or US- 8029014-$ or US- 7789402-$ or US- 7658399-$ or US- 5167425-$ or US- 8936261-$ or US- 9010773-$ or US- 9119483-$ or US- 9200746-$ or US- 9199659-$ or US- 9108659-$ or US- 9073563-$ or US- 9242665-$ or US- 7401803-$ or US- 9227650-$ or US- 9260128-$).did. or (US- 9260127-$ or US- 8857830-$ or US- 2769482-$ or US- 4542915-$ or US- 6715783-$ or US- 9108654-$ or US- 9630642-$ or US- 9517787-$ or US- 9327752-$ or US- 6561526-$ or US- 8967171-$ or US- 9517789-$ or US- 9561817-$ or US- 5522121-$ or US- 9545941-$ or US- 9056622-$ or US- 9403550-$ or US- 8899615-$ or US- 7364183-$ or US- 9637155-$ or US- 9421992-$ or US- 9545940-$ or US- 9346378-$ or US- 8678498-$ or US- 4915446-$ or US- 4634177-$ or US- 4306749-$).did. or (US- 8851505-$ or US- 8651502-$ or US-					

		6893040-$ or US-6446990-$ or US-5865447-$ or US-5772279-$ or US-5567008-$ or US-8657326-$ or US-8491000-$ or US-6155740-$ or US-5947555-$ or US-7267359-$ or US-9776652-$ or US-9771095-$ or US-9725106-$ or US-9701333-$ or US-8585075-$ or US-8596670-$ or US-9956979-$ or US-9944305-$ or US-9924806-$ or US-9884640-$ or US-9849903-$ or US-9840168-$ or US-10207731-$ or US-10023218-$ or US-6938906-$).did. or (US-D593459-$ or US-D621306-$ or US-8328208-$ or US-7513512-$ or US-10293843-$ or US-10556611-$ or US-10556610-$ or US-10449987-$).did. or (US-3000645-$ or US-2453631-$ or US-1707186-$).did.					
L474	94	L472 and L473	(US-PGPUB; USPAT; USOCR; FPRS; EPO; JPO)	OR	ON	ON	2020/03/01 11:02 PM
L475	15	"37454081".FMID.	(US-PGPUB; USPAT; FPRS; JPO)	OR	ON	ON	2020/03/01 11:04 PM
L476	16	("2010/0072732").URPN.	(USPAT)	OR	ON	ON	2020/03/01 11:07 PM
L484	1	("10730543").PN.	(US-PGPUB; USPAT; USOCR)	OR	OFF	OFF	2020/09/10 02:15 PM
L485	0	("202000223470").PN.	(US-PGPUB; USPAT; USOCR)	OR	OFF	OFF	2020/09/10 02:16 PM
L486	1	("20200223470").PN.	(US-PGPUB; USPAT; USOCR)	OR	OFF	OFF	2020/09/10 02:16 PM
L487	41	(Zehfuss near2 Mark).in.	(US-PGPUB; USPAT; USOCR; FPRS; EPO; JPO; DERWENT)	OR	ON	ON	2020/09/10 02:19 PM
L488	4211	(B62B7/008,00,006,14,142,145).CPC.	(US-PGPUB; USPAT; USOCR; FPRS; EPO; JPO)	OR	ON	ON	2020/09/10 02:24 PM

L489	2957	(B62B9/12,28,102).CPC.	(US-PGPUB; USPAT; USOCR; FPRS; EPO; JPO)	OR	ON	ON	2020/09/10 02:24 PM
L490	6047	L488 or L489	(US-PGPUB; USPAT; USOCR; FPRS; EPO; JPO)	OR	ON	ON	2020/09/10 02:24 PM
L491	1552888	@pd>="20200228"	(US-PGPUB; USPAT; USOCR; FPRS; EPO; JPO)	OR	ON	ON	2020/09/10 02:24 PM
L492	69	L490 and L491	(US-PGPUB; USPAT; USOCR; FPRS; EPO; JPO)	OR	ON	ON	2020/09/10 02:34 PM
L493	98	("10023218" | "10207731" | "10293843" | "10449987" | "10556610" | "1707186" | "20010033069" | "20020109321" | "20030025304" | "20060001226" | "20060131841" | "20060290107" | "20070001429" | "20070085303" | "20070090619" | "20070114738" | "20080224451" | "20080231022" | "20090302578" | "20100140902" | "20140191483" | "20140333039" | "20160046315" | "3000645" | "4542915" | "5201535" | "5338096" | "5567008" | "6045145" | "6209892" | "6286844" | "6378892" | "6443467" | "6513827" | "6561526" | "6676140" | "6752405" | "6851693" | "6923467" | "7249779" | "7311323" | "7320471" | "7367581" | "7377537" | "7401803" | "7475900" | "7481439" | "7497461" | "7677585" | "7681894" | "7766366" | "7832755" | "7896384" | "7938435" | "8029007" | "8029014" | "8033554" | "8061732" | "8157273" | "8231136" | "8251382" | "8262103" | "8336904" | "8444171" | "8458880" | "8585075" | "8596670" | "8696016" | "8733784" |	(US-PGPUB; USPAT; USOCR)	OR	ON	ON	2020/09/10 02:43 PM

		"8764048" | "8882134" | "8905427" | "8936261" | "9010773" | "9108654" | "9108659" | "9119483" | "9199659" | "9200746" | "9227650" | "9242665" | "9260127" | "9260128" | "9517787" | "9561817" | "9701333" | "9725106" | "9771095" | "9776652" | "9840168" | "9849903" | "9884640" | "9924806" | "9944305" | "9956979" | "D593459").PN. OR ("10730543").URPN.					
L494	45	(Baby near2 Jogger).AS.	(US-PGPUB; USPAT; USOCR; FPRS; EPO; JPO; DERWENT)	OR	ON	ON	2020/09/10 02:47 PM
L495	173	(US-20100052277-$ or US-20070114738-$ or US-20070001429-$ or US-20060290107-$ or US-20030075903-$ or US-20080303232-$ or US-20070085303-$ or US-20060131841-$ or US-20060001226-$ or US-20080224451-$ or US-20010033069-$ or US-20030025304-$ or US-20070187914-$ or US-20070069505-$ or US-20080231022-$ or US-20100301585-$ or US-20100013281-$ or US-20150360709-$ or US-20070069504-$ or US-20100072732-$ or US-20090302578-$ or US-20130113188-$ or US-20130049331-$ or US-20160001805-$ or US-20040164593-$ or US-20070075525-$).did. or (US-20130087993-$).did. or (US-5338096-$ or US-6045145-$ or US-3223431-$ or US-6378892-$ or US-5653460-$ or US-6209892-$ or US-5201535-$ or US-4620711-$ or US-6676140-$ or US-6017051-$ or US-1707186-$ or US-	(US-PGPUB; USPAT; USOCR)	OR	ON	ON	2020/09/10 02:56 PM

		7475900-$ or US- 7938435-$ or US- D508443-$ or US- 7497461-$ or US- 4570956-$ or US- 6923467-$ or US- 6752405-$ or US- 8157273-$ or US- 7896384-$ or US- 7677585-$ or US- 8128103-$ or US- 7597332-$ or US- 7481439-$ or US- 6851693-$ or US- 5848797-$).did. or (US- 3000645-$ or US- 8070180-$ or US- 7832755-$ or US- 7261308-$ or US- 5704627-$ or US- 5794951-$ or US- 5647601-$ or US- 2453631-$ or US- 6443467-$ or US- 8205906-$ or US- 8262103-$ or US- 8336904-$ or US- 8371606-$ or US- 8251382-$ or US- 7377537-$ or US- 7320471-$ or US- 7032922-$ or US- 7367581-$ or US- 8029007-$ or US- 7699325-$ or US- 6827356-$ or US- 8398098-$ or US- 7766366-$ or US- 6286844-$ or US- 6513827-$ or US- 8764048-$ or US- 8061732-$).did. or (US- 8733784-$ or US- 8696016-$ or US- 8231136-$ or US- 8458880-$ or US- 7249779-$ or US- 7311323-$ or US- 8444171-$ or US- 8033554-$ or US- 7681894-$ or US- 8955869-$ or US- 8905427-$ or US- 8882134-$ or US- 8029014-$ or US- 7789402-$ or US- 7658399-$ or US- 5167425-$ or US-					

		8936261-$ or US- 9010773-$ or US- 9119483-$ or US- 9200746-$ or US- 9199659-$ or US- 9108659-$ or US- 9073563-$ or US- 9242665-$ or US- 7401803-$ or US- 9227650-$ or US- 9260128-$).did. or (US- 9260127-$ or US- 8857830-$ or US- 2769482-$ or US- 4542915-$ or US- 6715783-$ or US- 9108654-$ or US- 9630642-$ or US- 9517787-$ or US- 9327752-$ or US- 6561526-$ or US- 8967171-$ or US- 9517789-$ or US- 9561817-$ or US- 5522121-$ or US- 9545941-$ or US- 9056622-$ or US- 9403550-$ or US- 8899615-$ or US- 7364183-$ or US- 9637155-$ or US- 9421992-$ or US- 9545940-$ or US- 9346378-$ or US- 8678498-$ or US- 4915446-$ or US- 4634177-$ or US- 4306749-$).did. or (US- 8851505-$ or US- 8651502-$ or US- 6893040-$ or US- 6446990-$ or US- 5865447-$ or US- 5772279-$ or US- 5567008-$ or US- 8657326-$ or US- 8491000-$ or US- 6155740-$ or US- 5947555-$ or US- 7267359-$ or US- 9776652-$ or US- 9771095-$ or US- 9725106-$ or US- 9701333-$ or US- 8585075-$ or US- 8596670-$ or US- 9956979-$ or US- 9944305-$ or US-					

		9924806-$ or US-9884640-$ or US-9849903-$ or US-9840168-$ or US-10207731-$ or US-10023218-$ or US-6938906-$).did. or (US-D593459-$ or US-D621306-$ or US-8328208-$ or US-7513512-$ or US-10293843-$ or US-10556611-$ or US-10556610-$ or US-10449987-$ or US-10730543-$).did. or (US-3000645-$ or US-2453631-$ or US-1707186-$).did.					
L496	84	("1707186"|"20010033069"|"20020109321"|"20030025304"|"20060001226"|"20060131841"|"20060290107"|"20070001429"|"20070085303"|"20070090619"|"20070114738"|"20080224451"|"20080231022"|"20090302578"|"20140191483"|"20160046315"|"3000645"|"4542915"|"5201535"|"5338096"|"5567008"|"6045145"|"6209892"|"6286844"|"6378892"|"6443467"|"6513827"|"6561526"|"6676140"|"6752405"|"6851693"|"6923467"|"7249779"|"7311323"|"7320471"|"7367581"|"7377537"|"7401803"|"7475900"|"7481439"|"7497461"|"7677585"|"7681894"|"7766366"|"7832755"|"7896384"|"7938435"|"8029007"|"8029014"|"8033554"|"8061732"|"8157273"|"8231136"|"8251382"|"8262103"|"8336904"|"8444171"|"8458880"|"8585075"|"8596670"|"8696016"|"8733784"|"8764048"|"8882134"|"8905427"|"8936261"|"9010773"|"9108654"|"9108659"|"9119483"|"9199659"|"9200746"|"9227650"|"9242665"|"9260127"|"9260128"|	(US-PGPUB; USPAT; USOCR)	OR	ON	ON	2020/09/10 02:57 PM

		9517787"|"9561817"|"9701333"|"9725106"|"9771095"|"9776652").PN.					
L497	4	L496 not L495	(US-PGPUB; USPAT; USOCR)	OR	ON	ON	2020/09/10 02:58 PM
L499	84	("1707186"|"20010033069"|"20020109321"|"20030025304"|"20060001226"|"20060131841"|"20060290107"|"20070001429"|"20070085303"|"20070090619"|"20070114738"|"20080224451"|"20080231022"|"20090302578"|"20140191483"|"20160046315"|"3000645"|"4542915"|"5201535"|"5338096"|"5567008"|"6045145"|"6209892"|"6286844"|"6378892"|"6443467"|"6513827"|"6561526"|"6676140"|"6752405"|"6851693"|"6923467"|"7249779"|"7311323"|"7320471"|"7367581"|"7377537"|"7401803"|"7475900"|"7481439"|"7497461"|"7677585"|"7681894"|"7766366"|"7832755"|"7896384"|"7938435"|"8029007"|"8029014"|"8033554"|"8061732"|"8157273"|"8231136"|"8251382"|"8262103"|"8336904"|"8444171"|"8458880"|"8585075"|"8596670"|"8696016"|"8733784"|"8764048"|"8882134"|"8905427"|"8936261"|"9010773"|"9108654"|"9108659"|"9119483"|"9199659"|"9200746"|"9227650"|"9242665"|"9260127"|"9260128"|"9517787"|"9561817"|"9701333"|"9725106"|"9771095"|"9776652").PN.	(US-PGPUB; USPAT; USOCR)	OR	ON	ON	2020/09/10 09:06 PM
L500	41	(Zehfuss near2 Mark).in.	(US-PGPUB; USPAT; USOCR; FPRS; EPO; JPO; DERWENT)	OR	ON	ON	2020/09/10 11:39 PM
L501	10	(Lee near2 (Jon and Hee)).in.	(US-PGPUB; USPAT; USOCR; FPRS; EPO; JPO; DERWENT)	OR	ON	ON	2020/09/10 11:43 PM
L502	25	(Roe near2 Megan).in.	(US-PGPUB; USPAT; USOCR; FPRS; EPO; JPO; DERWENT)	OR	ON	ON	2020/09/10 11:56 PM

L503	5	(Simpson near2 (Stacy and Noel)).in.	(US-PGPUB; USPAT; USOCR; FPRS; EPO; JPO; DERWENT)	OR	ON	ON	2020/09/11 12:00 AM
L504	1	("7475900").PN.	(US-PGPUB; USPAT; USOCR)	OR	OFF	OFF	2020/09/15 03:29 PM
L505	1	("9260127").PN.	(US-PGPUB; USPAT; USOCR)	OR	OFF	OFF	2020/09/15 11:58 PM
L506	4378	(B62B7/008,00,006,14, 142,145).CPC.	(US-PGPUB; USPAT; USOCR; FPRS; EPO; JPO)	OR	ON	ON	2021/04/11 11:36 PM
L507	3086	(B62B9/12,28,102).CPC.	(US-PGPUB; USPAT; USOCR; FPRS; EPO; JPO)	OR	ON	ON	2021/04/11 11:36 PM
L508	6262	L506 or L507	(US-PGPUB; USPAT; USOCR; FPRS; EPO; JPO)	OR	ON	ON	2021/04/11 11:36 PM
L509	2515828	@pd>="20200910"	(US-PGPUB; USPAT; USOCR; FPRS; EPO; JPO)	OR	ON	ON	2021/04/11 11:47 PM
L510	120	L508 and L509	(US-PGPUB; USPAT; USOCR; FPRS; EPO; JPO)	OR	ON	ON	2021/04/11 11:48 PM
L511	1	("6286844").PN.	(US-PGPUB; USPAT; USOCR)	OR	OFF	OFF	2021/04/22 11:33 AM
L512	1	("10730543").PN.	(US-PGPUB; USPAT; USOCR)	OR	OFF	OFF	2021/04/22 12:44 PM
L513	4404	(B62B7/008,00,006,14, 142,145).CPC.	(US-PGPUB; USPAT; USOCR; FPRS; EPO; JPO)	OR	ON	ON	2021/07/02 08:37 PM
L514	3109	(B62B9/12,28,102).CPC.	(US-PGPUB; USPAT; USOCR; FPRS; EPO; JPO)	OR	ON	ON	2021/07/02 08:37 PM
L515	6295	L513 or L514	(US-PGPUB; USPAT; USOCR; FPRS; EPO; JPO)	OR	ON	ON	2021/07/02 08:37 PM
L516	184287	@pd>="20210411"	(US-PGPUB; USPAT; USOCR; FPRS; EPO; JPO)	OR	ON	ON	2021/07/02 08:37 PM
L517	15	L515 and L516	(US-PGPUB; USPAT; USOCR; FPRS; EPO; JPO)	OR	ON	ON	2021/07/02 08:38 PM
L518	12	"22994051".FMID.	(US-PGPUB; USPAT; FPRS; JPO)	OR	ON	ON	2021/07/02 08:52 PM
L522	4494	(B62B7/008,00,006,14, 142,145).CPC.	(US-PGPUB; USPAT; USOCR; FPRS; EPO; JPO)	OR	ON	ON	2021/08/11 03:57 PM
L523	3202	(B62B9/12,28,102).CPC.	(US-PGPUB; USPAT; USOCR; FPRS; EPO; JPO)	OR	ON	ON	2021/08/11 03:57 PM
L524	6428	L522 or L523	(US-PGPUB; USPAT; USOCR; FPRS; EPO; JPO)	OR	ON	ON	2021/08/11 03:57 PM

L525	81312	@pd>="20210702"	(US-PGPUB; USPAT; USOCR; FPRS; EPO; JPO)	OR	ON	ON	2021/08/11 03:58 PM
L526	6	L524 and L525	(US-PGPUB; USPAT; USOCR; FPRS; EPO; JPO)	OR	ON	ON	2021/08/11 03:58 PM
L527	427	("10000226" | "10023218" | "10077063" | "10144442" | "10150496" | "10155528" | "10239550" | "10414423" | "10442453" | "10449987" | "10556610" | "20020041082" | "20030094791" | "20040090046" | "20050150053" | "20050167951" | "20050225056" | "20050242548" | "20050264064" | "20070013167" | "20070031224" | "20070045975" | "20070085303" | "20070108710" | "20070126195" | "20070187914" | "20070241524" | "20080079240" | "20080093825" | "20080211206" | "20080224450" | "20080231023" | "20090194973" | "20090206566" | "20090295128" | "20090315299" | "20100038887" | "20100052277" | "20100109293" | "20100127480" | "20100140902" | "20100230933" | "20100237637" | "20110012324" | "20110062676" | "20110148076" | "20110163519" | "20110181024" | "20110193325" | "20110221169" | "20110266762" |	(US-PGPUB; USPAT; USOCR)	OR	ON	ON	2021/08/11 03:59 PM

		"20110272925" | "20110291388" | "20110291389" | "20110309658" | "20120242062" | "20130113185" | "20130153616" | "20130154215" | "20130154322" | "20130227817" | "20130270800" | "20140044472" | "20140054939" | "20140056638" | "20140167393" | "20140183843" | "20140191483" | "20150021872" | "20150042075" | "20150074947" | "20150076774" | "20150108738" | "20150136553" | "20150152665" | "20150158334" | "20150197268" | "20150274188" | "20150291200" | "20150375766" | "20160001804" | "20160046314" | "20160159385" | "20160288814" | "20160332655" | "20170021851" | "20170144686" | "20170203779" | "20170217471" | "20170240197" | "20170297600" | "20170313337" | "20180001950" | "20180029625" | "20180111636" | "20190009811").PN. OR ("20190168794" | "20190193769" | "20190256121" | "2907372" | "3084949" | "4142027" | "4191397" | "4354689" | "4786064" | "4834403" | "4953880" | "5197753" | "5201535" | "5203577" | "5215320" | "5230523" | "5240265" | "5265931" | "5364137" | "5499831" | "5516142" | "5517718" | "5562300"					

		"5596910" | "5601297" | "5625923" | "5634537" | "5660430" | "5676386" | "5718439" | "5765665" | "5794951" | "5845917" | "5845924" | "5893606" | "5935010" | "5975545" | "5988670" | "6022042" | "6045145" | "6062577" | "6070890" | "6086086" | "6086087" | "6102167" | "6102431" | "6120041" | "6120054" | "6155592" | "6163924" | "6176459" | "6176507" | "6193263" | "6238125" | "6241274" | "6250652" | "6264007" | "6270111" | "6286844" | "6308805" | "6318807" | "6341672" | "6347777" | "6375213" | "6375260" | "6398233" | "6402114" | "6412809" | "6439521" | "6443468" | "6446990" | "6478327" | "6478328" | "6478376" | "6499786" | "6502669" | "6513827" | "6554298" | "6557870" | "6557885" | "6572134" | "6592132" | "6595583" | "6598712" | "6626452" | "6666473" | "6692015" | "6715783" | "6736451" | "6742791" | "6793283" | "6793292" | "6830260" | "6851700" | "6863286" | "6869096" | "6896286" | "6908087" | "6983986" | "6991248" | "7017937" | "7032922" | "7044497" | "7059452" | "7070197" | "7083175" | "7118121" | "7188858" | "7210699" | "7213818" | "7232019" | "7267359" | "7278652" | "7281732" | "7338122" | "7367581" | "7370913" | "7377537" | "7383925" | "7396039" | "7401803" | "7404569" | "7410186" | "7445228").PN. OR ("7455336" | "7475900" | "7497449" | "7497461" | "7500692" | "7537093" | "7550692" | "7566068" | "7597396" | "7600775" | "7614641" | "7618093" | "7632035" | "7658399"					

		| "7677590" | "7681894" | "7686322" | "7686323" | "7694980" | "7694995" | "7712765" | "7753398" | "7766366" | "7766367" | "7780183" | "7784801" | "7798500" | "7798515" | "7832755" | "7871099" | "7871100" | "7900952" | "7909353" | "7918001" | "7922182" | "7946650" | "7971884" | "7971897" | "7971933" | "8033555" | "8056975" | "8061732" | "8087680" | "8087688" | "8092111" | "8100429" | "8157273" | "8162025" | "8172243" | "8172253" | "8186705" | "8205906" | "8205907" | "8220118" | "8226110" | "8226111" | "8231136" | "8240700" | "8251382" | "8262103" | "8276935" | "8282120" | "8291555" | "8313115" | "8316999" | "8322744" | "8366127" | "8371606" | "8376375" | "8382127" | "8382150" | "8388254" | "8393679" | "8398096" | "8398111" | "8398143" | "8414012" | "8418816" | "8444170" | "8448977" | "8458880" | "8459665" | "8474836" | "8474854" | "8485546" | "8490757" | "8491000" | "8505956" | "8517412" | "8550489" | "8556780" | "8567311" | "8567866" | "8585063" | "8585075" | "8590919" | "8596669" | "8596670" | "8602442" | "8608190" | "8616638" | "8635743" | "8646158" | "8651502" | "8657308" | "8657311" | "8662516" | "8672341" | "8678498" | "8696015" | "8702118" | "8708364" | "8713765" | "8714581" | "8720936" | "8764048" | "8777253" | "8789662" | "8827283" | "8840132" | "8844964" | "8851505" | "8864166" | "8876147" | "8882134").PN. OR ("8899614" | "8899615" | "8905427" | "8905428"					

		| "8919806" | "8919807" | "8936261" | "8955856" | "8955868" | "8955869" | "8960734" | "8961057" | "8973217" | "8985616" | "8991838" | "8991853" | "8991854" | "8997948" | "9010773" | "9044104" | "9050993" | "9067613" | "9085312" | "9090125" | "9108658" | "9108659" | "9139044" | "9150236" | "9174662" | "9193370" | "9193373" | "9205855" | "9216755" | "9260127" | "9260128" | "9327752" | "9399477" | "9403449" | "9403549" | "9403550" | "9415790" | "9428208" | "9463822" | "9481206" | "9493178" | "9517786" | "9517789" | "9522615" | "9540028" | "9545940" | "9545941" | "9561816" | "9610966" | "9630642" | "9637153" | "9643640" | "9701332" | "9725107" | "9776652" | "9796404" | "9815487" | "9821831" | "9840168" | "9849903" | "9862401" | "9884640" | "9902417" | "9908551" | "9944305" | "9950730" | "9962011" | "D576084" | "D643344" | "D643345" | "D643346" | "D643786" | "D683974" | "D699633" | "D716705" | "D756852").PN. OR ("11059510").URPN.					
L528	2	("20130270800" | "8157273").PN. OR ("11052933").URPN.	(US-PGPUB; USPAT; USOCR)	OR	ON	ON	2021/08/11 04:01 PM
L529	2	("20130270800" | "8157273").PN. OR ("11052933").URPN.	(US-PGPUB; USPAT; USOCR)	OR	ON	ON	2021/08/11 04:03 PM
L530	2	"49324395".FMID.	(US-PGPUB; USPAT; FPRS; JPO)	OR	ON	ON	2021/08/11 04:04 PM
L531	21	("0522608" | "0677195" | "0720692" | "3997180" | "4620686" | "7364183" | "7475900" | "8157273" | "8398143" | "8444171" | "8596670" | "D598333").PN. OR ("8844964").URPN.	(US-PGPUB; USPAT; USOCR)	OR	ON	ON	2021/08/11 04:05 PM

L532	1	("20200385045").pn.	(US-PGPUB; USPAT; USOCR; FIT (AP, AT, AU, BE, BG, BR, BY, CA, CH, CN, CS, CU, CZ, DD, DE, DK, EA, EE, EP, ES, FI, FR, GB, HR, HU, ID, IE, IL, IS, IT, JP, KR, LT, LU, LV, MA, MC, MD, MY, NL, NO, NZ, OA, PH, PL, PT, RO, RS, RU, SE, SG, SI, SK, SU, TH, TN, TR, TW, UA, VN, WO); FPRS; EPO; JPO)	OR	ON	ON	2021/10/13 12:35 AM
L533	111	500 501 502 503 494	(US-PGPUB; USPAT; USOCR; FIT (AP, AT, AU, BE, BG, BR, BY, CA, CH, CN, CS, CU, CZ, DD, DE, DK, EA, EE, EP, ES, FI, FR, GB, HR, HU, ID, IE, IL, IS, IT, JP, KR, LT, LU, LV, MA, MC, MD, MY, NL, NO, NZ, OA, PH, PL, PT, RO, RS, RU, SE, SG, SI, SK, SU, TH, TN, TR, TW, UA, VN, WO); FPRS; EPO; JPO)	OR	ON	ON	2021/10/13 09:34 AM
L534	3	500 501 502 503 494	(US-PGPUB; USPAT; USOCR; FIT (AP, AT, AU, BE, BG, BR, BY, CA, CH, CN, CS, CU, CZ, DD, DE, DK, EA, EE, EP, ES, FI, FR, GB, HR, HU, ID, IE, IL, IS, IT, JP, KR, LT, LU, LV, MA, MC, MD, MY, NL, NO, NZ, OA, PH, PL, PT, RO, RS, RU, SE, SG, SI, SK, SU, TH, TN, TR, TW, UA, VN, WO); FPRS; EPO; JPO)	AND	ON	ON	2021/10/13 09:35 AM
L535	92	500 501 502 503	(US-PGPUB; USPAT; USOCR; FIT (AP, AT, AU, BE, BG, BR, BY, CA, CH, CN, CS, CU, CZ, DD, DE, DK, EA, EE, EP, ES, FI, FR, GB, HR, HU, ID, IE, IL, IS, IT, JP, KR, LT, LU, LV, MA, MC, MD, MY, NL, NO, NZ, OA, PH, PL, PT, RO, RS, RU, SE, SG, SI, SK, SU, TH,	OR	ON	ON	2021/10/13 09:36 AM

			TN, TR, TW, UA, VN, WO); FPRS; EPO; JPO)				
L536	19	533 NOT 535	(US-PGPUB; USPAT; USOCR; FIT (AP, AT, AU, BE, BG, BR, BY, CA, CH, CN, CS, CU, CZ, DD, DE, DK, EA, EE, EP, ES, FI, FR, GB, HR, HU, ID, IE, IL, IS, IT, JP, KR, LT, LU, LV, MA, MC, MD, MY, NL, NO, NZ, OA, PH, PL, PT, RO, RS, RU, SE, SG, SI, SK, SU, TH, TN, TR, TW, UA, VN, WO); FPRS; EPO; JPO)	OR	ON	ON	2021/10/13 09:36 AM
L537	12	"57325932".fmid.	(US-PGPUB; USPAT; USOCR; FIT (AU, AP, AT, BE, BG, BR, BY, CA, CH, CN, CS, CU, CZ, DD, DE, DK, EA, EE, EP, ES, FI, FR, GB, HR, HU, ID, IE, IL, IS, IT, JP, KR, LT, LU, LV, MA, OA, RU, SU, WO, MC, MD, MY, NL, NO, NZ, PH, PL, PT, RO, RS, SE, SG, SI, SK, TH, TN, TR, TW, UA, VN); FPRS; JPO)	OR	ON	ON	2021/10/13 09:38 AM
L538	6	"38367586".fmid.	(US-PGPUB; USPAT; USOCR; FIT (AU, AP, AT, BE, BG, BR, BY, CA, CH, CN, CS, CU, CZ, DD, DE, DK, EA, EE, EP, ES, FI, FR, GB, HR, HU, ID, IE, IL, IS, IT, JP, KR, LT, LU, LV, MA, OA, RU, SU, WO, MC, MD, MY, NL, NO, NZ, PH, PL, PT, RO, RS, SE, SG, SI, SK, TH, TN, TR, TW, UA, VN); FPRS; JPO)	OR	ON	ON	2021/10/14 09:55 AM
L539	30	("3145442" | "5865447" | "5947555" | "6446314" | "7032922" | "20040164593").pn. OR ("7681894").urpn. AND (PGPB | USPT | USOC).dbnm.	(US-PGPUB; USPAT; USOCR)	OR	ON	ON	2021/10/14 09:56 AM
L540	3527	(B62B9/12,28,102).CPC.	(US-PGPUB; USPAT; USOCR; FPRS; EPO; JPO)	OR	ON	ON	2021/10/14 11:06 AM

L541	4425	(B62B7/008,00,006,14,142,145).CPC.	(US-PGPUB; USPAT; USOCR; FPRS; EPO; JPO)	OR	ON	ON	2021/10/14 11:06 AM
L542	819242	@pd>="20210811"	(US-PGPUB; USPAT; USOCR; FIT (AU, AP, AT, BE, BG, BR, BY, CA, CH, CN, CS, CU, CZ, DD, DE, DK, EA, EE, EP, ES, FI, FR, GB, HR, HU, ID, IE, IL, IS, IT, JP, KR, LT, LU, LV, MA, OA, RU, SU, WO, MC, MD, MY, NL, NO, NZ, PH, PL, PT, RO, RS, SE, SG, SI, SK, TH, TN, TR, TW, UA, VN); FPRS; EPO; JPO)	OR	ON	ON	2021/10/14 11:06 AM
L543	6717	(B62B7/008,00,006,14,142,145).CPC.	(US-PGPUB; USPAT; USOCR; FIT (AU, AP, AT, BE, BG, BR, BY, CA, CH, CN, CS, CU, CZ, DD, DE, DK, EA, EE, EP, ES, FI, FR, GB, HR, HU, ID, IE, IL, IS, IT, JP, KR, LT, LU, LV, MA, OA, RU, SU, WO, MC, MD, MY, NL, NO, NZ, PH, PL, PT, RO, RS, SE, SG, SI, SK, TH, TN, TR, TW, UA, VN); FPRS; EPO; JPO)	OR	ON	ON	2021/10/14 11:14 AM
L544	6006	(B62B9/12,28,102).CPC.	(US-PGPUB; USPAT; USOCR; FIT (AU, AP, AT, BE, BG, BR, BY, CA, CH, CN, CS, CU, CZ, DD, DE, DK, EA, EE, EP, ES, FI, FR, GB, HR, HU, ID, IE, IL, IS, IT, JP, KR, LT, LU, LV, MA, OA, RU, SU, WO, MC, MD, MY, NL, NO, NZ, PH, PL, PT, RO, RS, SE, SG, SI, SK, TH, TN, TR, TW, UA, VN); FPRS; EPO; JPO)	OR	ON	ON	2021/10/14 11:14 AM
L545	10662	544 543	(US-PGPUB; USPAT; USOCR; FIT (AU, AP, AT, BE, BG, BR, BY, CA, CH, CN, CS, CU, CZ, DD, DE, DK, EA, EE, EP, ES, FI, FR, GB, HR, HU, ID, IE, IL, IS, IT, JP, KR, LT, LU, LV, MA, OA, RU, SU, WO,	OR	ON	ON	2021/10/14 11:14 AM

			MC, MD, MY, NL, NO, NZ, PH, PL, PT, RO, RS, SE, SG, SI, SK, TH, TN, TR, TW, UA, VN); FPRS; EPO; JPO)				
L546	2061	544 543	(US-PGPUB; USPAT; USOCR; FIT (AU, AP, AT, BE, BG, BR, BY, CA, CH, CN, CS, CU, CZ, DD, DE, DK, EA, EE, EP, ES, FI, FR, GB, HR, HU, ID, IE, IL, IS, IT, JP, KR, LT, LU, LV, MA, OA, RU, SU, WO, MC, MD, MY, NL, NO, NZ, PH, PL, PT, RO, RS, SE, SG, SI, SK, TH, TN, TR, TW, UA, VN); FPRS; EPO; JPO)	AND	ON	ON	2021/10/14 11:14 AM
L547	36	545 AND 542	(US-PGPUB; USPAT; USOCR; FIT (AU, AP, AT, BE, BG, BR, BY, CA, CH, CN, CS, CU, CZ, DD, DE, DK, EA, EE, EP, ES, FI, FR, GB, HR, HU, ID, IE, IL, IS, IT, JP, KR, LT, LU, LV, MA, OA, RU, SU, WO, MC, MD, MY, NL, NO, NZ, PH, PL, PT, RO, RS, SE, SG, SI, SK, TH, TN, TR, TW, UA, VN); FPRS; EPO; JPO)	AND	ON	ON	2021/10/14 11:15 AM
L548	10	("20100244408" | "20110012324" | "20110241313" | "20150259005" | "20180027989" | "20190256120" | "20190320812" | "20190320814" | "20190322304" | "20200239058").pn. OR ("11091186").urpn. AND (PGPB | USPT | USOC).dbnm.	(US-PGPUB; USPAT; USOCR)	AND	ON	ON	2021/10/14 11:27 AM
L549	1	("7475900").pn.	(US-PGPUB; USPAT; USOCR)	AND	ON	ON	2021/10/14 09:17 PM
L550	67	(Zehfuss near2 Mark).in.	(US-PGPUB; USPAT; USOCR; FIT (AU, AP, AT, BE, BG, BR, BY, CA, CH, CN, CS, CU, CZ, DD, DE, DK, EA,	OR	ON	ON	2021/10/15 09:23 AM

			EE, EP, ES, FI, FR, GB, HR, HU, ID, IE, IL, IS, IT, JP, KR, LT, LU, LV, MA, OA, RU, SU, WO, MC, MD, MY, NL, NO, NZ, PH, PL, PT, RO, RS, SE, SG, SI, SK, TH, TN, TR, TW, UA, VN); FPRS; EPO; JPO; DERWENT)				
L551	6	(Simpson near2 (Stacy AND Noel)).in.	(US-PGPUB; USPAT; USOCR; FIT (AU, AP, AT, BE, BG, BR, BY, CA, CH, CN, CS, CU, CZ, DD, DE, DK, EA, EE, EP, ES, FI, FR, GB, HR, HU, ID, IE, IL, IS, IT, JP, KR, LT, LU, LV, MA, OA, RU, SU, WO, MC, MD, MY, NL, NO, NZ, PH, PL, PT, RO, RS, SE, SG, SI, SK, TH, TN, TR, TW, UA, VN); FPRS; EPO; JPO; DERWENT)	OR	ON	ON	2021/10/15 09:23 AM
L552	29	(Roe near2 Megan).in.	(US-PGPUB; USPAT; USOCR; FIT (AU, AP, AT, BE, BG, BR, BY, CA, CH, CN, CS, CU, CZ, DD, DE, DK, EA, EE, EP, ES, FI, FR, GB, HR, HU, ID, IE, IL, IS, IT, JP, KR, LT, LU, LV, MA, OA, RU, SU, WO, MC, MD, MY, NL, NO, NZ, PH, PL, PT, RO, RS, SE, SG, SI, SK, TH, TN, TR, TW, UA, VN); FPRS; EPO; JPO; DERWENT)	OR	ON	ON	2021/10/15 09:24 AM
L553	18	(Lee near2 (Jon AND Hee)).in.	(US-PGPUB; USPAT; USOCR; FIT (AU, AP, AT, BE, BG, BR, BY, CA, CH, CN, CS, CU, CZ, DD, DE, DK, EA, EE, EP, ES, FI, FR, GB, HR, HU, ID, IE, IL, IS, IT, JP, KR, LT, LU, LV, MA, OA, RU, SU, WO, MC, MD, MY, NL, NO, NZ, PH, PL, PT, RO, RS, SE, SG, SI, SK, TH, TN, TR, TW, UA, VN); FPRS; EPO; JPO; DERWENT)	OR	ON	ON	2021/10/15 09:24 AM
L554	92	550 551 552 553	(US-PGPUB; USPAT; USOCR; FIT (AU, AP,	OR	ON	ON	2021/10/15 09:25 AM

			AT, BE, BG, BR, BY, CA, CH, CN, CS, CU, CZ, DD, DE, DK, EA, EE, EP, ES, FI, FR, GB, HR, HU, ID, IE, IL, IS, IT, JP, KR, LT, LU, LV, MA, OA, RU, SU, WO, MC, MD, MY, NL, NO, NZ, PH, PL, PT, RO, RS, SE, SG, SI, SK, TH, TN, TR, TW, UA, VN); FPRS; EPO; JPO; DERWENT)				
L555	6	550 551 552 553	(US-PGPUB; USPAT; USOCR; FIT (AU, AP, AT, BE, BG, BR, BY, CA, CH, CN, CS, CU, CZ, DD, DE, DK, EA, EE, EP, ES, FI, FR, GB, HR, HU, ID, IE, IL, IS, IT, JP, KR, LT, LU, LV, MA, OA, RU, SU, WO, MC, MD, MY, NL, NO, NZ, PH, PL, PT, RO, RS, SE, SG, SI, SK, TH, TN, TR, TW, UA, VN); FPRS; EPO; JPO; DERWENT)	AND	ON	ON	2021/10/15 09:25 AM
L556	49	(Baby near2 Jogger).AS.	(US-PGPUB; USPAT; USOCR; FIT (AU, AP, AT, BE, BG, BR, BY, CA, CH, CN, CS, CU, CZ, DD, DE, DK, EA, EE, EP, ES, FI, FR, GB, HR, HU, ID, IE, IL, IS, IT, JP, KR, LT, LU, LV, MA, OA, RU, SU, WO, MC, MD, MY, NL, NO, NZ, PH, PL, PT, RO, RS, SE, SG, SI, SK, TH, TN, TR, TW, UA, VN); FPRS; EPO; JPO; DERWENT)	OR	ON	ON	2021/10/15 09:26 AM
L557	167	545 AND (seat near2 (attach$4 AND convert$4))	(US-PGPUB; USPAT; USOCR; FIT (AP, AT, AU, BE, BG, BR, BY, CA, CH, CN, CS, CU, CZ, DD, DE, DK, EA, EE, EP, ES, FI, FR, GB, HR, HU, ID, IE, IL, IS, IT, JP, KR, LT, LU, LV, MA, MC, MD, MY, NL, NO, NZ, OA, PH, PL, PT, RO, RS, RU, SE, SG, SI, SK, SU, TH, TN, TR, TW, UA, VN, WO); FPRS; EPO;	OR	ON	ON	2021/10/15 09:43 AM

			JPO; DERWENT)				
L558	405	545 AND ((double OR tandem) SAME stroller)	(US-PGPUB; USPAT; USOCR; FPRS; EPO; JPO; DERWENT)	OR	ON	ON	2021/10/15 09:45 AM
L559	115914245	@ad<="20081204"	(US-PGPUB; USPAT; USOCR; FIT (AP, AT, AU, BE, BG, BR, BY, CA, CH, CN, CS, CU, CZ, DD, DE, DK, EA, EE, EP, ES, FI, FR, GB, HR, HU, ID, IE, IL, IS, IT, JP, KR, LT, LU, LV, MA, MC, MD, MY, NL, NO, NZ, OA, PH, PL, PT, RO, RS, RU, SE, SG, SI, SK, SU, TH, TN, TR, TW, UA, VN, WO); FPRS; EPO; JPO; DERWENT)	OR	ON	ON	2021/10/15 09:46 AM
L560	3529	545 AND 559	(US-PGPUB; USPAT; USOCR; FPRS; EPO; JPO; DERWENT)	OR	ON	ON	2021/10/15 09:46 AM
L561	146	560 AND ((double OR tandem) SAME stroller)	(US-PGPUB; USPAT; USOCR; FPRS; EPO; JPO; DERWENT)	OR	ON	ON	2021/10/15 09:46 AM
L562	10	("6595583" | "7559606" | "7681894" | "8033555").pn. OR ("8313115").urpn. AND (PGPB | USPT | USOC).dbnm.	(US-PGPUB; USPAT; USOCR)	OR	ON	ON	2021/10/15 09:49 AM
L563	1	"52582129".fmid.	(US-PGPUB; USPAT; USOCR; FIT (AU, AP, AT, BE, BG, BR, BY, CA, CH, CN, CS, CU, CZ, DD, DE, DK, EA, EE, EP, ES, FI, FR, GB, HR, HU, ID, IE, IL, IS, IT, JP, KR, LT, LU, LV, MA, OA, RU, SU, WO, MC, MD, MY, NL, NO, NZ, PH, PL, PT, RO, RS, SE, SG, SI, SK, TH, TN, TR, TW, UA, VN); FPRS; JPO)	OR	ON	ON	2021/10/15 11:58 AM
L564	1	("2015/0061249").urpn. AND (PGPB | USPT | USOC).dbnm.	(US-PGPUB; USPAT; USOCR)	OR	ON	ON	2021/10/15 11:58 AM
L565	4853	545 AND 559	(US-PGPUB; USPAT; USOCR; FIT (AP, AT, AU, BE, BG, BR, BY, CA, CH, CN, CS, CU, CZ, DD, DE, DK, EA, EE, EP, ES, FI, FR, GB, HR, HU, ID, IE, IL, IS,	OR	ON	ON	2022/02/02 05:41 PM

			IT, JP, KR, LT, LU, LV, MA, MC, MD, MY, NL, NO, NZ, OA, PH, PL, PT, RO, RS, RU, SE, SG, SI, SK, SU, TH, TN, TR, TW, UA, VN, WO); FPRS; EPO; JPO; DERWENT)				
L566	2093553	@pd>="20211015"	(US-PGPUB; USPAT; USOCR; FIT (AP, AT, AU, BE, BG, BR, BY, CA, CH, CN, CS, CU, CZ, DD, DE, DK, EA, EE, EP, ES, FI, FR, GB, HR, HU, ID, IE, IL, IS, IT, JP, KR, LT, LU, LV, MA, MC, MD, MY, NL, NO, NZ, OA, PH, PL, PT, RO, RS, RU, SE, SG, SI, SK, SU, TH, TN, TR, TW, UA, VN, WO); FPRS; EPO; JPO)	OR	ON	ON	2022/02/02 05:42 PM
L567	0	565 AND 566	(US-PGPUB; USPAT; USOCR; FIT (AP, AT, AU, BE, BG, BR, BY, CA, CH, CN, CS, CU, CZ, DD, DE, DK, EA, EE, EP, ES, FI, FR, GB, HR, HU, ID, IE, IL, IS, IT, JP, KR, LT, LU, LV, MA, MC, MD, MY, NL, NO, NZ, OA, PH, PL, PT, RO, RS, RU, SE, SG, SI, SK, SU, TH, TN, TR, TW, UA, VN, WO); FPRS; EPO; JPO)	OR	ON	ON	2022/02/02 05:42 PM
L568	73	545 AND 566	(US-PGPUB; USPAT; USOCR; FIT (AP, AT, AU, BE, BG, BR, BY, CA, CH, CN, CS, CU, CZ, DD, DE, DK, EA, EE, EP, ES, FI, FR, GB, HR, HU, ID, IE, IL, IS, IT, JP, KR, LT, LU, LV, MA, MC, MD, MY, NL, NO, NZ, OA, PH, PL, PT, RO, RS, RU, SE, SG, SI, SK, SU, TH, TN, TR, TW, UA, VN, WO); FPRS; EPO; JPO)	OR	ON	ON	2022/02/02 05:42 PM
L569	1	("6286844").pn.	(US-PGPUB; USPAT; USOCR)	AND	ON	ON	2022/02/02 05:45 PM
L570	12	("4805938" | "5653460"	(US-PGPUB; USPAT;	AND	ON	ON	2022/02/02

		| "5848797" | "6540239" | "6938906" | "6981709" | "7597332" | "9056622" | "9283978" | "9771095" | "20070001410" | "20100072731").pn. OR ("11220282").urpn. AND (PGPB | USPT | USOC).dbnm.	USOCR)				06:03 PM
L571	228	((US-20100052277-A1 OR US-20070114738-A1 OR US-20070001429-A1 OR US-20060290107-A1 OR US-20030075903-A1 OR US-20080303232-A1 OR US-20070085303-A1 OR US-20060131841-A1 OR US-20060001226-A1 OR US-20080224451-A1 OR US-20010033069-A1 OR US-20030025304-A1 OR US-20070187914-A1 OR US-20070069505-A1 OR US-20080231022-A1 OR US-20100301585-A1 OR US-20100013281-A1 OR US-20150360709-A1 OR US-20070069504-A1 OR US-20100072732-A1 OR US-20090302578-A1 OR US-20130113188-A1 OR US-20090243261-A1 OR US-20130049331-A1 OR US-20160001805-A1 OR US-20040164593-A1 OR US-20070075525-A1 OR US-20130087993-A1 OR US-20140191483-A1 OR US-20070090619-A1 OR US-20020109321-A1 OR US-20100140902-A1 OR US-20180229750-A1 OR US-20170158219-A1 OR US-20160075363-A1 OR US-20150061249-A1 OR US-20120228843-A1	(US-PGPUB; USPAT; USOCR; FIT (AP, AT, AU, BE, BG, BR, BY, CA, CH, CN, CS, CU, CZ, DD, DE, DK, EA, EE, EP, ES, FI, FR, GB, HR, HU, ID, IE, IL, IS, IT, JP, KR, LT, LU, LV, MA, MC, MD, MY, NL, NO, NZ, OA, PH, PL, PT, RO, RS, RU, SE, SG, SI, SK, SU, TH, TN, TR, TW, UA, VN, WO); FPRS; EPO; JPO; DERWENT; IBM_TDB)	AND	ON	ON	2022/02/02 06:32 PM

		OR US-20080179848-A1 OR US-20080150247-A1 OR US-20050006864-A1).did. AND PGPB.dbnm.) OR ((US-5338096-A OR US-6045145-A OR US-3223431-A OR US-6378892-B1 OR US-5653460-A OR US-6209892-B1 OR US-5201535-A OR US-4620711-A OR US-6676140-B1 OR US-6017051-A OR US-1707186-A OR US-7475900-B2 OR US-7938435-B2 OR US-D508443-S OR US-7497461-B2 OR US-4570956-A OR US-6923467-B2 OR US-6752405-B1 OR US-8157273-B2 OR US-7896384-B2 OR US-7677585-B2 OR US-8128103-B1 OR US-7597332-B2 OR US-7481439-B2 OR US-6851693-B2 OR US-5848797-A OR US-3000645-A OR US-8070180-B2 OR US-7832755-B2 OR US-7261308-B2 OR US-5704627-A OR US-5794951-A OR US-5647601-A OR US-2453631-A OR US-6443467-B1 OR US-8205906-B2 OR US-8262103-B2 OR US-8336904-B2 OR US-8371606-B2 OR US-8251382-B2 OR US-7377537-B2 OR US-7320471-B2 OR US-7032922-B1 OR US-7367581-B2 OR US-8029007-B2 OR US-7699325-B2 OR US-6827356-B2 OR US-8398098-B2 OR US-7766366-B2 OR US-6286844-B1 OR US-6513827-B1 OR US-8764048-B1 OR US-					

		8061732-B2 OR US- 8733784-B2 OR US- 8696016-B2 OR US- 8231136-B2 OR US- 8458880-B2 OR US- 7249779-B2 OR US- 7311323-B1 OR US- 8444171-B2 OR US- 8033554-B2 OR US- 7681894-B2 OR US- 8955869-B2 OR US- 8905427-B2 OR US- 8882134-B2 OR US- 8029014-B2 OR US- 7789402-B2 OR US- 7658399-B2 OR US- 5167425-A OR US- 8936261-B2 OR US- 9010773-B2 OR US- 9119483-B1 OR US- 9200746-B2 OR US- 9199659-B2 OR US- 9108659-B2 OR US- 9073563-B2 OR US- 9242665-B2 OR US- 7401803-B1 OR US- 9227650-B2 OR US- 9260128-B2 OR US- 9260127-B2 OR US- 8857830-B2 OR US- 2769482-A OR US- 4542915-A OR US- 6715783-B1 OR US- 9108654-B2 OR US- 9630642-B2 OR US- 9517787-B2 OR US- 9327752-B2 OR US- 6561526-B1 OR US- 8967171-B2 OR US- 9517789-B2 OR US- 9561817-B2 OR US- 6447001-B1 OR US- 5522121-A OR US- 9545941-B2 OR US- 9056622-B2 OR US- 9403550-B2 OR US- 8899615-B2 OR US- 7364183-B2 OR US- 9637155-B1 OR US- 9421992-B2 OR US- 9545940-B2 OR US- 9346378-B2 OR US- 8678498-B2 OR US- 4915446-A OR US- 4634177-A OR US- 4306749-A OR US- 8851505-B2 OR US- 8651502-B2 OR US-					

		6893040-B2 OR US- 6446990-B1 OR US- 5865447-A OR US- 5772279-A OR US- 5567008-A OR US- 8657326-B2 OR US- 8491000-B2 OR US- 6155740-A OR US- 5947555-A OR US- 7267359-B1 OR US- 9776652-B2 OR US- 9771095-B2 OR US- 9725106-B2 OR US- 9701333-B2 OR US- 8585075-B2 OR US- 8596670-B2 OR US- 9956979-B1 OR US- 9944305-B2 OR US- 9924806-B2 OR US- 9884640-B2 OR US- 9849903-B1 OR US- 9840168-B2 OR US- 10207731-B2 OR US- 10023218-B2 OR US- 6938906-B1 OR US- D593459-S OR US- D621306-S OR US- 8328208-B2 OR US- 7513512-B2 OR US- 10293843-B2 OR US- 10556611-B2 OR US- 10556610-B2 OR US- 10449987-B2 OR US- 10730543-B2 OR US- 10926785-B2 OR US- 10899377-B2 OR US- 10974754-B2 OR US- 10994763-B2 OR US- 11001289-B2 OR US- 11059510-B2 OR US- 11052933-B2 OR US- 8844964-B2 OR US- 6086087-A OR US- 9643640-B2 OR US- 9616912-B2 OR US- 9283978-B2 OR US- 9050987-B2 OR US- 9004524-B1 OR US- 8857829-B2 OR US- 8807588-B2 OR US- 8708364-B2 OR US- 8684395-B2 OR US- 8602441-B2 OR US- 8505958-B2 OR US- 8480115-B2 OR US- 8322745-B2 OR US- 6585284-B2 OR US- 6267406-B1 OR US-					

		11091186-B2 OR US-11052934-B2 OR US-10960913-B2 OR US-8313115-B2 OR US-10322739-B2 OR US-7971897-B2 OR US-7614640-B2 OR US-8205894-B2 OR US-6981709-B2 OR US-6935652-B2 OR US-3998490-A OR US-11220282-B2 OR US-11208136-B2 OR US-11208135-B2 OR US-11203371-B2 OR US-11192568-B2).did. AND USPT.dbnm.) OR ((US-3000645-A OR US-2453631-A OR US-1707186-A).did. AND USOC.dbnm.) OR ((US-20050006864-A1).did. AND DWPI.dbnm.)					
L572	9	571 AND (central$ near2 wheel)	(US-PGPUB; USPAT; USOCR; FIT (AP, AT, AU, BE, BG, BR, BY, CA, CH, CN, CS, CU, CZ, DD, DE, DK, EA, EE, EP, ES, FI, FR, GB, HR, HU, ID, IE, IL, IS, IT, JP, KR, LT, LU, LV, MA, MC, MD, MY, NL, NO, NZ, OA, PH, PL, PT, RO, RS, RU, SE, SG, SI, SK, SU, TH, TN, TR, TW, UA, VN, WO); FPRS; EPO; JPO)	OR	ON	ON	2022/02/02 06:32 PM
L573	1	("20200385045").PN.	(US-PGPUB; USPAT; USOCR)	OR	OFF	OFF	2022/02/03 10:10 AM
L574	11	"51060413".fmid.	(US-PGPUB; USPAT; USOCR; FIT (AU, AP, AT, BE, BG, BR, BY, CA, CH, CN, CS, CU, CZ, DD, DE, DK, EA, EE, EP, ES, FI, FR, GB, HR, HU, ID, IE, IL, IS, IT, JP, KR, LT, LU, LV, MA, OA, RU, SU, WO, MC, MD, MY, NL, NO, NZ, PH, PL, PT, RO, RS, SE, SG, SI, SK, TH, TN, TR, TW, UA, VN); FPRS; JPO)	OR	OFF	OFF	2022/02/03 12:40 PM
L575	19	"46172541".fmid.	(US-PGPUB; USPAT; USOCR; FIT (AU, AP, AT, BE, BG, BR, BY,	OR	OFF	OFF	2022/02/03 12:46 PM

			CA, CH, CN, CS, CU, CZ, DD, DE, DK, EA, EE, EP, ES, FI, FR, GB, HR, HU, ID, IE, IL, IS, IT, JP, KR, LT, LU, LV, MA, OA, RU, SU, WO, MC, MD, MY, NL, NO, NZ, PH, PL, PT, RO, RS, SE, SG, SI, SK, TH, TN, TR, TW, UA, VN); FPRS; JPO)				
L576	1	(D593459).pn.	(US-PGPUB; USPAT; USOCR)	OR	OFF	OFF	2022/02/03 01:26 PM
L577	13	("10449987"|"10556610"|"10899377"|"11091186"|"6267406"|"6286844"|"6513827"|"7377537"|"7475900"|"7971897"|"8313115"|"8602441"|"D593459").PN.	(US-PGPUB; USPAT; USOCR)	OR	OFF	OFF	2022/02/03 01:28 PM
L578	2332892	@pd>="20220202"	(US-PGPUB; USPAT; USOCR; FIT (AP, AT, AU, BE, BG, BR, BY, CA, CH, CN, CS, CU, CZ, DD, DE, DK, EA, EE, EP, ES, FI, FR, GB, HR, HU, ID, IE, IL, IS, IT, JP, KR, LT, LU, LV, MA, MC, MD, MY, NL, NO, NZ, OA, PH, PL, PT, RO, RS, RU, SE, SG, SI, SK, SU, TH, TN, TR, TW, UA, VN, WO); FPRS; EPO; JPO)	OR	ON	ON	2022/06/15 12:13 PM
L579	11186	544 543	(US-PGPUB; USPAT; USOCR; FIT (AU, AP, AT, BE, BG, BR, BY, CA, CH, CN, CS, CU, CZ, DD, DE, DK, EA, EE, EP, ES, FI, FR, GB, HR, HU, ID, IE, IL, IS, IT, JP, KR, LT, LU, LV, MA, OA, RU, SU, WO, MC, MD, MY, NL, NO, NZ, PH, PL, PT, RO, RS, SE, SG, SI, SK, TH, TN, TR, TW, UA, VN); FPRS; EPO; JPO)	OR	ON	ON	2022/06/15 12:14 PM
L580	126	579 AND 578	(US-PGPUB; USPAT; USOCR; FIT (AP, AT, AU, BE, BG, BR, BY, CA, CH, CN, CS, CU, CZ, DD, DE, DK, EA, EE, EP, ES, FI, FR, GB,	OR	ON	ON	2022/06/15 12:14 PM

			HR, HU, ID, IE, IL, IS, IT, JP, KR, LT, LU, LV, MA, MC, MD, MY, NL, NO, NZ, OA, PH, PL, PT, RO, RS, RU, SE, SG, SI, SK, SU, TH, TN, TR, TW, UA, VN, WO); FPRS; EPO; JPO)				
L581	14	("292933" | "329579" | "4953887" | "6676140" | "8070180" | "8128103" | "8152177" | "8186705" | "8596670" | "8915516" | "9511789" | "10077063" | "20070001429" | "20100283227" | "20150217792" | "20150232114").pn. OR ("11338836").urpn. AND (PGPB | USPT | USOC).dbnm.	(US-PGPUB; USPAT; USOCR)	OR	ON	ON	2022/06/15 12:24 PM
L582	101	("1239498" | "1322788" | "1418929" | "1832770" | "3173396" | "3831960" | "4310167" | "4433869" | "4893826" | "4936629" | "5022669" | "D326748" | "5158319" | "5301968" | "5417449" | "5556118" | "5581843" | "5653460" | "5664795" | "5722594" | "6086087" | "D431798" | "6135222" | "6267406" | "6312005" | "6394470" | "6454286" | "6540239" | "6698788" | "6702306" | "6877762" | "6935652" | "6938906" | "6981709" | "7059625" | "7261308" | "7338122" | "7481439" | "7497449" | "7559606" | "7597332" | "7740313" | "7770970" | "7780184" | "7789413" | "7832756" | "7854435" | "7887129" | "7891732" | "7938433" | "7971897" | "7992889" | "8029007" | "8070179" | "8128118" | "8128119" | "8157273" | "8262107" | "8276935" | "8882134" | "9056622" | "9260127" | "10556610" | "20020125662" | "20040011884" | "20050253348" |	(US-PGPUB; USPAT; USOCR)	OR	ON	ON	2022/06/15 12:25 PM

		"20050253431" | "20050264064" | "20060290107" | "20070001410" | "20070075510" | "20070114738" | "20070257526" | "20080042476" | "20080224451" | "20090072520" | "20090302556" | "20090302578" | "20100032925" | "20100066058" | "20100072731" | "20100109270" | "20100109293" | "20100140902" | "20100148553" | "20100314925" | "20110012325" | "20110074195" | "20110101742" | "20110115264" | "20120080244" | "20120181779" | "20130154215" | "20140191483" | "20150021872" | "20160159385").pn. OR ("11292499").urpn. AND (PGPB | USPT | USOC).dbnm.					
L583	114	("1707186" | "3000645" | "4542915" | "5201535" | "5338096" | "5567008" | "6045145" | "6086087" | "6209892" | "6267406" | "6286844" | "6378892" | "6443467" | "6513827" | "6561526" | "6585284" | "6676140" | "6752405" | "6851693" | "6923467" | "7249779" | "7311323" | "7320471" | "7367581" | "7377537" | "7401803" | "7475900" | "7481439" | "7497461" | "D593459" | "7677585" | "7681894" | "7766366" | "7832755" | "7896384" | "7938435" | "8029007" | "8029014" | "8033554" | "8061732" | "8157273" | "8231136" | "8251382" | "8262103" | "8322745" | "8336904" | "8444171" | "8458880" | "8480115" | "8505952"	(US-PGPUB; USPAT; USOCR)	AND	ON	ON	2022/06/15 12:50 PM

		| "8585075" | "8596670" | "8602441" | "8696016" | "8733784" | "8764048" | "8844964" | "8882134" | "8905427" | "8936261" | "9010773" | "9108654" | "9108659" | "9119483" | "9199659" | "9200746" | "9227650" | "9242665" | "9260127" | "9260128" | "9517787" | "9561817" | "9701333" | "9725106" | "9771095" | "9776652" | "9840168" | "9849903" | "9884640" | "9924806" | "9944305" | "9956979" | "10023218" | "10207731" | "10293843" | "10449987" | "10556610" | "10730543" | "10899377" | "10926785" | "10974754" | "10994763" | "11001289" | "11052933" | "11059510" | "20010033069" | "20020109321" | "20030025304" | "20060001226" | "20060131841" | "20060290107" | "20070001429" | "20070085303" | "20070090619" | "20070114738" | "20080224451" | "20080231022" | "20090302578" | "20100140902" | "20140191483" | "20140333039" | "20160046315").pn. OR ("11192568").urpn. AND (PGPB | USPT | USOC).dbnm.					
L584	99	("1707186" | "3000645" | "4542915" | "5201535" | "5338096" | "5567008" | "6045145" | "6209892" | "6286844" | "6378892" | "6443467" | "6513827" | "6561526" | "6676140" | "6752405" | "6851693" | "6923467" | "7249779"	(US-PGPUB; USPAT; USOCR)	AND	ON	ON	2022/06/15 12:54 PM

		| "7311323" | "7320471" | "7367581" | "7377537" | "7401803" | "7475900" | "7481439" | "7497461" | "D593459" | "7677585" | "7681894" | "7766366" | "7832755" | "7896384" | "7938435" | "8029007" | "8029014" | "8033554" | "8061732" | "8157273" | "8231136" | "8251382" | "8262103" | "8336904" | "8444171" | "8458880" | "8585075" | "8596670" | "8696016" | "8733784" | "8764048" | "8882134" | "8905427" | "8936261" | "9010773" | "9108654" | "9108659" | "9119483" | "9199659" | "9200746" | "9227650" | "9242665" | "9260127" | "9260128" | "9517787" | "9561817" | "9701333" | "9725106" | "9771095" | "9776652" | "9840168" | "9849903" | "9884640" | "9924806" | "9944305" | "9956979" | "10023218" | "10207731" | "10293843" | "10449987" | "10556610" | "20010033069" | "20020109321" | "20030025304" | "20060001226" | "20060131841" | "20060290107" | "20070001429" | "20070085303" | "20070090619" | "20070114738" | "20080224451" | "20080231022" | "20090302578" | "20100140902" | "20140191483" | "20140333039" | "20160046315").pn. OR ("10730543").urpn. AND (PGPB | USPT | USOC).dbnm.					
L585	31	("3998490" | "6045145" | "6086087" | "6209892" | "8641077" | "9849903" | "20080088115" | "20100013281" |	(US-PGPUB; USPAT; USOCR)	AND	ON	ON	2022/06/15 12:55 PM

		"20100072732" | "20100078916" | "20100140902" | "20100201103" | "20110175330" | "20110181024" | "20120261906" | "20130106078" | "20130140797" | "20130207369" | "20140191483" | "20140217706" | "20150232114" | "20160001805" | "20160339940" | "20170217471" | "20180043919" | "20180229750").pn. OR ("10293843").urpn. AND (PGPB | USPT | USOC).dbnm.					
L586	230	((US-20100052277-A1 OR US-20070114738-A1 OR US-20070001429-A1 OR US-20060290107-A1 OR US-20030075903-A1 OR US-20080303232-A1 OR US-20070085303-A1 OR US-20060131841-A1 OR US-20060001226-A1 OR US-20080224451-A1 OR US-20010033069-A1 OR US-20030025304-A1 OR US-20070187914-A1 OR US-20070069505-A1 OR US-20080231022-A1 OR US-20100301585-A1 OR US-20100013281-A1 OR US-20150360709-A1 OR US-20070069504-A1 OR US-20100072732-A1 OR US-20090302578-A1 OR US-20130113188-A1 OR US-20090243261-A1 OR US-20130049331-A1 OR US-20160001805-A1 OR US-20040164593-A1 OR US-20070075525-A1 OR US-20130087993-A1	(US-PGPUB; USPAT; USOCR; FIT (AP, AT, AU, BE, BG, BR, BY, CA, CH, CN, CS, CU, CZ, DD, DE, DK, EA, EE, EP, ES, FI, FR, GB, HR, HU, ID, IE, IL, IS, IT, JP, KR, LT, LU, LV, MA, MC, MD, MY, NL, NO, NZ, OA, PH, PL, PT, RO, RS, RU, SE, SG, SI, SK, SU, TH, TN, TR, TW, UA, VN, WO); FPRS; EPO; JPO; DERWENT; IBM_TDB)	AND	ON	ON	2022/06/15 01:30 PM

		OR US-20140191483-A1 OR US-20070090619-A1 OR US-20020109321-A1 OR US-20100140902-A1 OR US-20180229750-A1 OR US-20170158219-A1 OR US-20160075363-A1 OR US-20150061249-A1 OR US-20120228843-A1 OR US-20080179848-A1 OR US-20080150247-A1 OR US-20050006864-A1).did. AND PGPB.dbnm.) OR ((US-5338096-A OR US-6045145-A OR US-3223431-A OR US-6378892-B1 OR US-5653460-A OR US-6209892-B1 OR US-5201535-A OR US-4620711-A OR US-6676140-B1 OR US-6017051-A OR US-1707186-A OR US-7475900-B2 OR US-7938435-B2 OR US-D508443-S OR US-7497461-B2 OR US-4570956-A OR US-6923467-B2 OR US-6752405-B1 OR US-8157273-B2 OR US-7896384-B2 OR US-7677585-B2 OR US-8128103-B1 OR US-7597332-B2 OR US-7481439-B2 OR US-6851693-B2 OR US-5848797-A OR US-3000645-A OR US-8070180-B2 OR US-7832755-B2 OR US-7261308-B2 OR US-5704627-A OR US-5794951-A OR US-5647601-A OR US-2453631-A OR US-6443467-B1 OR US-8205906-B2 OR US-8262103-B2 OR US-8336904-B2 OR US-8371606-B2 OR US-8251382-B2 OR US-					

		7377537-B2 OR US- 7320471-B2 OR US- 7032922-B1 OR US- 7367581-B2 OR US- 8029007-B2 OR US- 7699325-B2 OR US- 6827356-B2 OR US- 8398098-B2 OR US- 7766366-B2 OR US- 6286844-B1 OR US- 6513827-B1 OR US- 8764048-B1 OR US- 8061732-B2 OR US- 8733784-B2 OR US- 8696016-B2 OR US- 8231136-B2 OR US- 8458880-B2 OR US- 7249779-B2 OR US- 7311323-B1 OR US- 8444171-B2 OR US- 8033554-B2 OR US- 7681894-B2 OR US- 8955869-B2 OR US- 8905427-B2 OR US- 8882134-B2 OR US- 8029014-B2 OR US- 7789402-B2 OR US- 7658399-B2 OR US- 5167425-A OR US- 8936261-B2 OR US- 9010773-B2 OR US- 9119483-B1 OR US- 9200746-B2 OR US- 9199659-B2 OR US- 9108659-B2 OR US- 9073563-B2 OR US- 9242665-B2 OR US- 7401803-B1 OR US- 9227650-B2 OR US- 9260128-B2 OR US- 9260127-B2 OR US- 8857830-B2 OR US- 2769482-A OR US- 4542915-A OR US- 6715783-B1 OR US- 9108654-B2 OR US- 9630642-B2 OR US- 9517787-B2 OR US- 9327752-B2 OR US- 6561526-B1 OR US- 8967171-B2 OR US- 9517789-B2 OR US- 9561817-B2 OR US- 6447001-B1 OR US- 5522121-A OR US- 9545941-B2 OR US- 9056622-B2 OR US- 9403550-B2 OR US-					

		8899615-B2 OR US- 7364183-B2 OR US- 9637155-B1 OR US- 9421992-B2 OR US- 9545940-B2 OR US- 9346378-B2 OR US- 8678498-B2 OR US- 4915446-A OR US- 4634177-A OR US- 4306749-A OR US- 8851505-B2 OR US- 8651502-B2 OR US- 6893040-B2 OR US- 6446990-B1 OR US- 5865447-A OR US- 5772279-A OR US- 5567008-A OR US- 8657326-B2 OR US- 8491000-B2 OR US- 6155740-A OR US- 5947555-A OR US- 7267359-B1 OR US- 9776652-B2 OR US- 9771095-B2 OR US- 9725106-B2 OR US- 9701333-B2 OR US- 8585075-B2 OR US- 8596670-B2 OR US- 9956979-B1 OR US- 9944305-B2 OR US- 9924806-B2 OR US- 9884640-B2 OR US- 9849903-B1 OR US- 9840168-B2 OR US- 10207731-B2 OR US- 10023218-B2 OR US- 6938906-B1 OR US- D593459-S OR US- D621306-S OR US- 8328208-B2 OR US- 7513512-B2 OR US- 10293843-B2 OR US- 10556611-B2 OR US- 10556610-B2 OR US- 10449987-B2 OR US- 10730543-B2 OR US- 10926785-B2 OR US- 10899377-B2 OR US- 10974754-B2 OR US- 10994763-B2 OR US- 11001289-B2 OR US- 11059510-B2 OR US- 11052933-B2 OR US- 8844964-B2 OR US- 6086087-A OR US- 9643640-B2 OR US- 9616912-B2 OR US- 9283978-B2 OR US-					

		9050987-B2 OR US-9004524-B1 OR US-8857829-B2 OR US-8807588-B2 OR US-8708364-B2 OR US-8684395-B2 OR US-8602441-B2 OR US-8505958-B2 OR US-8480115-B2 OR US-8322745-B2 OR US-6585284-B2 OR US-6267406-B1 OR US-11091186-B2 OR US-11052934-B2 OR US-10960913-B2 OR US-8313115-B2 OR US-10322739-B2 OR US-7971897-B2 OR US-7614640-B2 OR US-8205894-B2 OR US-6981709-B2 OR US-6935652-B2 OR US-3998490-A OR US-11220282-B2 OR US-11208136-B2 OR US-11208135-B2 OR US-11203371-B2 OR US-11192568-B2 OR US-11338836-B2 OR US-11292499-B2).did. AND USPT.dbnm.) OR ((US-3000645-A OR US-2453631-A OR US-1707186-A).did. AND USOC.dbnm.) OR ((US-20050006864-A1).did. AND DWPI.dbnm.)					
L587	25456812	@ad<="20081204"	(US-PGPUB; USPAT; USOCR; DERWENT)	OR	ON	ON	2022/06/15 01:30 PM
L588	110	587 AND 586	(US-PGPUB; USPAT; USOCR; DERWENT)	OR	ON	ON	2022/06/15 01:31 PM
L589	6	"53797406".fmid.	(US-PGPUB; USPAT; USOCR; FIT (AU, AP, AT, BE, BG, BR, BY, CA, CH, CN, CS, CU, CZ, DD, DE, DK, EA, EE, EP, ES, FI, FR, GB, HR, HU, ID, IE, IL, IS, IT, JP, KR, LT, LU, LV, MA, OA, RU, SU, WO, MC, MD, MY, NL, NO, NZ, PH, PL, PT, RO, RS, SE, SG, SI, SK, TH, TN, TR, TW, UA, VN); FPRS; JPO)	OR	ON	ON	2022/06/15 02:05 PM
L590	85	("4542915" | "4725071" | "D321850" | "5338096"	(US-PGPUB; USPAT; USOCR)	OR	ON	ON	2022/06/15 02:06 PM

		| "5417449" | "D359937" | "D375706" | "5664795" | "6086087" | "D429664" | "D430076" | "D431212" | "6267406" | "6676140" | "6702316" | "6843498" | "6877761" | "7451999" | "7699325" | "D636300" | "7971884" | "8070180" | "8146926" | "8157273" | "8205894" | "8282109" | "8322745" | "8398143" | "8444171" | "8480115" | "8684395" | "8714582" | "8757646" | "8807588" | "8844964" | "8857829" | "8905427" | "8915516" | "20030020259" | "20040094935" | "20060226635" | "20060290107" | "20070075525" | "20070085303" | "20070114738" | "20070267833" | "20080001370" | "20080179863" | "20080224432" | "20090039620" | "20090236826" | "20090302578" | "20100038886" | "20100038887" | "20100072731" | "20100140902" | "20100201089" | "20100282800" | "20100301585" | "20110175330" | "20120098219" | "20120098237" | "20120169021" | "20130049331" | "20130234419" | "20130264787" | "20130270800" | "20140159346" | "20140312586" | "20140346756").pn. OR ("9227650").urpn. AND (PGPB | USPT | USOC).dbnm.					
L591	102	("119331" | "1138802" | "1269379" | "1707186" | "1890469" | "3223431" | "3612603" | "3726536" | "4222132" | "4349938" |	(US-PGPUB; USPAT; USOCR)	OR	ON	ON	2022/06/15 09:09 PM

		"4391453" | "4403807" | "4684148" | "4725071" | "D296540" | "4805938" | "D300310" | "4834415" | "4834452" | "4858947" | "4872692" | "D305316" | "4969656" | "5018754" | "5033761" | "D321850" | "5064209" | "D328047" | "5167425" | "5221106" | "5230523" | "D348489" | "5338096" | "D360392" | "D370437" | "D382516" | "5653460" | "5664795" | "5772235" | "D404344" | "5887935" | "5918892" | "6086087" | "6099022" | "D430512" | "D431212" | "6267406" | "D452191" | "6357784" | "6361111" | "6375213" | "6431579" | "6527294" | "6536842" | "6585284" | "6676140" | "6679506" | "6752405" | "6843498" | "6935652" | "6938906" | "6938954" | "7025364" | "7364183" | "D568794" | "7367581" | "7516966" | "D593458" | "D595621" | "D598333" | "7597332" | "7896384" | "8128103" | "8157273" | "8398143" | "20040251063" | "20070045975" | "20090115151" | "20090160162" | "20100038887" | "20100140902" | "20110175330").pn. OR ("8905427").urpn. AND (PGPB | USPT | USOC).dbnm.					
L592	1	"41399621".fmid.	(US-PGPUB; USPAT; USOCR; FIT (AU, AP, AT, BE, BG, BR, BY, CA, CH, CN, CS, CU, CZ, DD, DE, DK, EA, EE, EP, ES, FI, FR, GB, HR, HU, ID, IE, IL, IS, IT, JP, KR, LT, LU, LV, MA, OA, RU, SU, WO, MC, MD, MY, NL, NO, NZ, PH, PL, PT, RO, RS, SE, SG, SI, SK, TH, TN, TR, TW, UA, VN); FPRS; JPO)	OR	ON	ON	2022/06/15 09:15 PM

L593	14	("2009/0302578").urpn. AND (PGPB | USPT | USOC).dbnm.	(US-PGPUB; USPAT; USOCR)	OR	ON	ON	2022/06/15 09:20 PM
L594	1	("20200385045").pn.	(US-PGPUB; USPAT; USOCR)	OR	ON	ON	2022/09/22 12:25 PM
L595	52	(Baby near2 Jogger).AS.	(US-PGPUB; USPAT; USOCR; FIT (AU, AP, AT, BE, BG, BR, BY, CA, CH, CN, CS, CU, CZ, DD, DE, DK, EA, EE, EP, ES, FI, FR, GB, HR, HU, ID, IE, IL, IS, IT, JP, KR, LT, LU, LV, MA, OA, RU, SU, WO, MC, MD, MY, NL, NO, NZ, PH, PL, PT, RO, RS, SE, SG, SI, SK, TH, TN, TR, TW, UA, VN); FPRS; EPO; JPO; DERWENT)	OR	ON	ON	2022/09/23 03:30 PM
L596	95	550 551 552 553	(US-PGPUB; USPAT; USOCR; FIT (AU, AP, AT, BE, BG, BR, BY, CA, CH, CN, CS, CU, CZ, DD, DE, DK, EA, EE, EP, ES, FI, FR, GB, HR, HU, ID, IE, IL, IS, IT, JP, KR, LT, LU, LV, MA, OA, RU, SU, WO, MC, MD, MY, NL, NO, NZ, PH, PL, PT, RO, RS, SE, SG, SI, SK, TH, TN, TR, TW, UA, VN); FPRS; EPO; JPO; DERWENT)	OR	ON	ON	2022/09/23 03:30 PM
L597	670	545 AND 542	(US-PGPUB; USPAT; USOCR; FIT (AU, AP, AT, BE, BG, BR, BY, CA, CH, CN, CS, CU, CZ, DD, DE, DK, EA, EE, EP, ES, FI, FR, GB, HR, HU, ID, IE, IL, IS, IT, JP, KR, LT, LU, LV, MA, OA, RU, SU, WO, MC, MD, MY, NL, NO, NZ, PH, PL, PT, RO, RS, SE, SG, SI, SK, TH, TN, TR, TW, UA, VN); FPRS; EPO; JPO)	AND	ON	ON	2022/09/23 03:52 PM
L598	1304890	@pd>="20220615"	(US-PGPUB; USPAT; USOCR; FIT (AP, AT, AU, BE, BG, BR, BY, CA, CH, CN, CS, CU, CZ, DD, DE, DK, EA, EE, EP, ES, FI, FR, GB,	OR	ON	ON	2022/09/23 03:53 PM

			HR, HU, ID, IE, IL, IS, IT, JP, KR, LT, LU, LV, MA, MC, MD, MY, NL, NO, NZ, OA, PH, PL, PT, RO, RS, RU, SE, SG, SI, SK, SU, TH, TN, TR, TW, UA, VN, WO); FPRS; EPO; JPO)				
L599	75	597 AND 598	(US-PGPUB; USPAT; USOCR; FIT (AP, AT, AU, BE, BG, BR, BY, CA, CH, CN, CS, CU, CZ, DD, DE, DK, EA, EE, EP, ES, FI, FR, GB, HR, HU, ID, IE, IL, IS, IT, JP, KR, LT, LU, LV, MA, MC, MD, MY, NL, NO, NZ, OA, PH, PL, PT, RO, RS, RU, SE, SG, SI, SK, SU, TH, TN, TR, TW, UA, VN, WO); FPRS; EPO; JPO)	OR	ON	ON	2022/09/23 03:53 PM
L600	31	("10449987"|"10556610"|"10899377"|"11091186"|"11192568"|"11203371"|"11208135"|"11208136"|"11220282"|"11292499"|"11338836"|"20060290107"|"5167425"|"5338096"|"5988670"|"6045145"|"6086087"|"6267406"|"6286844"|"6513827"|"7377537"|"7475900"|"7563170"|"7938435"|"7971897"|"8313115"|"8602441"|"9403550"|"D429476"|"D430076"|"D593459").PN.	(US-PGPUB; USPAT; USOCR)	OR	ON	ON	2022/09/23 03:54 PM
L601	232	((US-20100052277-A1 OR US-20070114738-A1 OR US-20070001429-A1 OR US-20060290107-A1 OR US-20030075903-A1 OR US-20080303232-A1 OR US-20070085303-A1 OR US-20060131841-A1 OR US-20060001226-A1 OR US-20080224451-A1 OR US-20010033069-A1 OR US-20030025304-A1 OR US-20070187914-A1	(US-PGPUB; USPAT; USOCR; FIT (AP, AT, AU, BE, BG, BR, BY, CA, CH, CN, CS, CU, CZ, DD, DE, DK, EA, EE, EP, ES, FI, FR, GB, HR, HU, ID, IE, IL, IS, IT, JP, KR, LT, LU, LV, MA, MC, MD, MY, NL, NO, NZ, OA, PH, PL, PT, RO, RS, RU, SE, SG, SI, SK, SU, TH, TN, TR, TW, UA, VN, WO); FPRS; EPO; JPO; DERWENT; IBM_TDB)	OR	ON	ON	2022/09/23 03:54 PM

		OR US-20070069505-A1 OR US-20080231022-A1 OR US-20100301585-A1 OR US-20100013281-A1 OR US-20150360709-A1 OR US-20070069504-A1 OR US-20100072732-A1 OR US-20090302578-A1 OR US-20130113188-A1 OR US-20090243261-A1 OR US-20130049331-A1 OR US-20160001805-A1 OR US-20040164593-A1 OR US-20070075525-A1 OR US-20130087993-A1 OR US-20140191483-A1 OR US-20070090619-A1 OR US-20020109321-A1 OR US-20100140902-A1 OR US-20180229750-A1 OR US-20170158219-A1 OR US-20160075363-A1 OR US-20150061249-A1 OR US-20120228843-A1 OR US-20080179848-A1 OR US-20080150247-A1 OR US-20050006864-A1 OR US-20150232114-A1).did. AND PGPB.dbnm.) OR ((US-5338096-A OR US-6045145-A OR US-3223431-A OR US-6378892-B1 OR US-5653460-A OR US-6209892-B1 OR US-5201535-A OR US-4620711-A OR US-6676140-B1 OR US-6017051-A OR US-1707186-A OR US-7475900-B2 OR US-7938435-B2 OR US-D508443-S OR US-7497461-B2 OR US-4570956-A OR US-6923467-B2 OR US-6752405-B1 OR US-8157273-B2 OR US-					

		7896384-B2 OR US- 7677585-B2 OR US- 8128103-B1 OR US- 7597332-B2 OR US- 7481439-B2 OR US- 6851693-B2 OR US- 5848797-A OR US- 3000645-A OR US- 8070180-B2 OR US- 7832755-B2 OR US- 7261308-B2 OR US- 5704627-A OR US- 5794951-A OR US- 5647601-A OR US- 2453631-A OR US- 6443467-B1 OR US- 8205906-B2 OR US- 8262103-B2 OR US- 8336904-B2 OR US- 8371606-B2 OR US- 8251382-B2 OR US- 7377537-B2 OR US- 7320471-B2 OR US- 7032922-B1 OR US- 7367581-B2 OR US- 8029007-B2 OR US- 7699325-B2 OR US- 6827356-B2 OR US- 8398098-B2 OR US- 7766366-B2 OR US- 6286844-B1 OR US- 6513827-B1 OR US- 8764048-B1 OR US- 8061732-B2 OR US- 8733784-B2 OR US- 8696016-B2 OR US- 8231136-B2 OR US- 8458880-B2 OR US- 7249779-B2 OR US- 7311323-B1 OR US- 8444171-B2 OR US- 8033554-B2 OR US- 7681894-B2 OR US- 8955869-B2 OR US- 8905427-B2 OR US- 8882134-B2 OR US- 8029014-B2 OR US- 7789402-B2 OR US- 7658399-B2 OR US- 5167425-A OR US- 8936261-B2 OR US- 9010773-B2 OR US- 9119483-B1 OR US- 9200746-B2 OR US- 9199659-B2 OR US- 9108659-B2 OR US- 9073563-B2 OR US- 9242665-B2 OR US-					

		7401803-B1 OR US- 9227650-B2 OR US- 9260128-B2 OR US- 9260127-B2 OR US- 8857830-B2 OR US- 2769482-A OR US- 4542915-A OR US- 6715783-B1 OR US- 9108654-B2 OR US- 9630642-B2 OR US- 9517787-B2 OR US- 9327752-B2 OR US- 6561526-B1 OR US- 8967171-B2 OR US- 9517789-B2 OR US- 9561817-B2 OR US- 6447001-B1 OR US- 5522121-A OR US- 9545941-B2 OR US- 9056622-B2 OR US- 9403550-B2 OR US- 8899615-B2 OR US- 7364183-B2 OR US- 9637155-B1 OR US- 9421992-B2 OR US- 9545940-B2 OR US- 9346378-B2 OR US- 8678498-B2 OR US- 4915446-A OR US- 4634177-A OR US- 4306749-A OR US- 8851505-B2 OR US- 8651502-B2 OR US- 6893040-B2 OR US- 6446990-B1 OR US- 5865447-A OR US- 5772279-A OR US- 5567008-A OR US- 8657326-B2 OR US- 8491000-B2 OR US- 6155740-A OR US- 5947555-A OR US- 7267359-B1 OR US- 9776652-B2 OR US- 9771095-B2 OR US- 9725106-B2 OR US- 9701333-B2 OR US- 8585075-B2 OR US- 8596670-B2 OR US- 9956979-B1 OR US- 9944305-B2 OR US- 9924806-B2 OR US- 9884640-B2 OR US- 9849903-B1 OR US- 9840168-B2 OR US- 10207731-B2 OR US- 10023218-B2 OR US- 6938906-B1 OR US-					

		D593459-S OR US-D621306-S OR US-8328208-B2 OR US-7513512-B2 OR US-10293843-B2 OR US-10556611-B2 OR US-10556610-B2 OR US-10449987-B2 OR US-10730543-B2 OR US-10926785-B2 OR US-10899377-B2 OR US-10974754-B2 OR US-10994763-B2 OR US-11001289-B2 OR US-11059510-B2 OR US-11052933-B2 OR US-8844964-B2 OR US-6086087-A OR US-9643640-B2 OR US-9616912-B2 OR US-9283978-B2 OR US-9050987-B2 OR US-9004524-B1 OR US-8857829-B2 OR US-8807588-B2 OR US-8708364-B2 OR US-8684395-B2 OR US-8602441-B2 OR US-8505958-B2 OR US-8480115-B2 OR US-8322745-B2 OR US-6585284-B2 OR US-6267406-B1 OR US-11091186-B2 OR US-11052934-B2 OR US-10960913-B2 OR US-8313115-B2 OR US-10322739-B2 OR US-7971897-B2 OR US-7614640-B2 OR US-8205894-B2 OR US-6981709-B2 OR US-6935652-B2 OR US-3998490-A OR US-11220282-B2 OR US-11208136-B2 OR US-11208135-B2 OR US-11203371-B2 OR US-11192568-B2 OR US-11338836-B2 OR US-11292499-B2 OR US-10077063-B2).did. AND USPT.dbnm.) OR ((US-3000645-A OR US-2453631-A OR US-1707186-A).did. AND USOC.dbnm.) OR ((US-20050006864-A1).did.					

		AND DWPI.dbnm.)					
L602	104	600 NOT 601	(US-PGPUB; USPAT; USOCR; FIT (AP, AT, AU, BE, BG, BR, BY, CA, CH, CN, CS, CU, CZ, DD, DE, DK, EA, EE, EP, ES, FI, FR, GB, HR, HU, ID, IE, IL, IS, IT, JP, KR, LT, LU, LV, MA, MC, MD, MY, NL, NO, NZ, OA, PH, PL, PT, RO, RS, RU, SE, SG, SI, SK, SU, TH, TN, TR, TW, UA, VN, WO); FPRS; EPO; JPO; DERWENT; IBM_TDB)	OR	ON	ON	2022/09/23 03:54 PM
L603	11	("6209892" | "6250653" | "9849903" | "9944305" | "10207731" | "10449987" | "10899377" | "20100013281" | "20120169021" | "20140345980" | "20160016601").pn. OR ("11370468").urpn. AND (PGPB | USPT | USOC).dbnm.	(US-PGPUB; USPAT; USOCR)	OR	ON	ON	2022/09/23 03:58 PM
L604	3	"47750100".fmid.	(US-PGPUB; USPAT; USOCR; FIT (AU, AP, AT, BE, BG, BR, BY, CA, CH, CN, CS, CU, CZ, DD, DE, DK, EA, EE, EP, ES, FI, FR, GB, HR, HU, ID, IE, IL, IS, IT, JP, KR, LT, LU, LV, MA, OA, RU, SU, WO, MC, MD, MY, NL, NO, NZ, PH, PL, PT, RO, RS, SE, SG, SI, SK, TH, TN, TR, TW, UA, VN); FPRS; JPO)	OR	ON	ON	2022/09/23 04:06 PM
L605	11	"66397144".fmid.	(US-PGPUB; USPAT; USOCR; FIT (AU, AP, AT, BE, BG, BR, BY, CA, CH, CN, CS, CU, CZ, DD, DE, DK, EA, EE, EP, ES, FI, FR, GB, HR, HU, ID, IE, IL, IS, IT, JP, KR, LT, LU, LV, MA, OA, RU, SU, WO, MC, MD, MY, NL, NO, NZ, PH, PL, PT, RO, RS, SE, SG, SI, SK, TH, TN, TR, TW, UA, VN); FPRS; JPO)	OR	ON	ON	2022/09/23 04:07 PM

L606	22	("6086086" | "6209892" | "8061732" | "8474854" | "8696016" | "9085312" | "9399477" | "20010013689" | "20020005628" | "20030201617" | "20070194545" | "20100127480" | "20100230933" | "20100244408" | "20100259021" | "20110298198" | "20130087993" | "20150042056" | "20160046315" | "20170313339").pn. OR ("10899377").urpn. AND (PGPB | USPT | USOC).dbnm.	(US-PGPUB; USPAT; USOCR)	OR	ON	ON	2022/09/23 04:07 PM
L607	1	("7475900").pn.	(US-PGPUB; USPAT; USOCR)	OR	ON	ON	2022/09/23 04:08 PM
L608	48	("5333893" | "D429664" | "D430076" | "6209892" | "6513827" | "6863286" | "7032922" | "7367581" | "7377537" | "20030111825").pn. OR ("7475900").urpn. AND (PGPB | USPT | USOC).dbnm.	(US-PGPUB; USPAT; USOCR)	OR	ON	ON	2022/09/23 04:09 PM
L609	114	("1707186" | "3000645" | "4542915" | "5201535" | "5338096" | "5567008" | "6045145" | "6086087" | "6209892" | "6267406" | "6286844" | "6378892" | "6443467" | "6513827" | "6561526" | "6585284" | "6676140" | "6752405" | "6851693" | "6923467" | "7249779" | "7311323" | "7320471" | "7367581" | "7377537" | "7401803" | "7475900" | "7481439" | "7497461" | "D593459" | "7677585" | "7681894" | "7766366" | "7832755" | "7896384" | "7938435" | "8029007" | "8029014" | "8033554" | "8061732" | "8157273" | "8231136" | "8251382" | "8262103" | "8322745" | "8336904" | "8444171" | "8458880" | "8480115" | "8505952" | "8585075" | "8596670"	(US-PGPUB; USPAT; USOCR)	OR	ON	ON	2022/09/23 04:17 PM

		| "8602441" | "8696016" | "8733784" | "8764048" | "8844964" | "8882134" | "8905427" | "8936261" | "9010773" | "9108654" | "9108659" | "9119483" | "9199659" | "9200746" | "9227650" | "9242665" | "9260127" | "9260128" | "9517787" | "9561817" | "9701333" | "9725106" | "9771095" | "9776652" | "9840168" | "9849903" | "9884640" | "9924806" | "9944305" | "9956979" | "10023218" | "10207731" | "10293843" | "10449987" | "10556610" | "10730543" | "10899377" | "10926785" | "10974754" | "10994763" | "11001289" | "11052933" | "11059510" | "20010033069" | "20020109321" | "20030025304" | "20060001226" | "20060131841" | "20060290107" | "20070001429" | "20070085303" | "20070090619" | "20070114738" | "20080224451" | "20080231022" | "20090302578" | "20100140902" | "20140191483" | "20140333039" | "20160046315").pn. OR ("11192568").urpn. AND (PGPB | USPT | USOC).dbnm.					
L610	108	("1239498" | "1322788" | "1418929" | "1832770" | "3173396" | "3831960" | "4310167" | "4433869" | "4893826" | "4936629" | "5022669" | "D326748" | "5158319" | "5301968" | "5417449" | "5556118" | "5581843" | "5653460" | "5664795" | "5722594"	(US-PGPUB; USPAT; USOCR)	OR	ON	ON	2022/09/23 04:18 PM

		| "6086087" | "D431798" | "6135222" | "6267406" | "6312005" | "6394470" | "6454286" | "6540239" | "6698788" | "6702306" | "6877762" | "6935652" | "6938906" | "6981709" | "7059625" | "7261308" | "7338122" | "7481439" | "7497449" | "7559606" | "7597332" | "7740313" | "7770970" | "7780184" | "7789413" | "7832756" | "7854435" | "7887129" | "7891732" | "7938433" | "7971897" | "7992889" | "8029007" | "8070179" | "8128118" | "8128119" | "8157273" | "8262107" | "8276935" | "8882134" | "9056622" | "20020125662" | "20040011884" | "20050253348" | "20050253431" | "20050264064" | "20060290107" | "20070001410" | "20070075510" | "20070114738" | "20070257526" | "20080042476" | "20080224451" | "20090072520" | "20090302556" | "20090302578" | "20100032925" | "20100072731" | "20100109270" | "20100109293" | "20100140902" | "20100148553" | "20100314925" | "20110074195" | "20110101742" | "20110115264" | "20120080244" | "20130154215" | "20140191483").pn. OR ("9260127").urpn. AND (PGPB | USPT | USOC).dbnm.					
L611	109	("1239498" | "1322788" | "1418929" | "1832770" | "3173396" | "3831960" | "4310167" | "4433869" | "4893826" | "4936629" | "5022669" | "D326748"	(US-PGPUB; USPAT; USOCR)	OR	ON	ON	2022/09/23 04:26 PM

		| "5158319" | "5301968" | "5417449" | "5556118" | "5581843" | "5653460" | "5664795" | "5722594" | "6086087" | "D431798" | "6135222" | "6267406" | "6312005" | "6394470" | "6454286" | "6540239" | "6698788" | "6702306" | "6935652" | "6938906" | "7059625" | "7261308" | "7338122" | "7481439" | "7497449" | "7559606" | "7597332" | "7740313" | "7770970" | "7780184" | "7789413" | "7832756" | "7854435" | "7887129" | "7891732" | "7938433" | "7971897" | "7992889" | "8029007" | "8070179" | "8128119" | "8157273" | "8262107" | "8276935" | "20020125662" | "20040011884" | "20050253348" | "20050253431" | "20050264064" | "20060290107" | "20070001410" | "20070075510" | "20070114738" | "20070257526" | "20080042476" | "20090072520" | "20090302556" | "20090302578" | "20100032925" | "20100072731" | "20100109270" | "20100109293" | "20100140902" | "20100148553" | "20100314925" | "20110074195" | "20110101742" | "20110115264" | "20120080244" | "20130154215").pn. OR ("8882134").urpn. AND (PGPB | USPT | USOC).dbnm.					
L612	28	("7789402" | "7832755" | "8033554" | "8231136" | "8602441" | "8905427" | "8967647" | "9050987" | "8955869" | "D747669" | "9399477" | "9403550" | "9493179" | "9517787"	(US-PGPUB; USPAT; USOCR)	OR	ON	ON	2022/09/23 04:31 PM

		| "9616912" | "9637154" | "20100140902" | "20130087993" | "20130154241" | "20150159414" | "20160046315").pn. OR ("10449987").urpn. AND (PGPB | USPT | USOC).dbnm.					
L613	4	"35160119".fmid.	(US-PGPUB; USPAT; USOCR; FIT (AU, AP, AT, BE, BG, BR, BY, CA, CH, CN, CS, CU, CZ, DD, DE, DK, EA, EE, EP, ES, FI, FR, GB, HR, HU, ID, IE, IL, IS, IT, JP, KR, LT, LU, LV, MA, OA, RU, SU, WO, MC, MD, MY, NL, NO, NZ, PH, PL, PT, RO, RS, SE, SG, SI, SK, TH, TN, TR, TW, UA, VN); FPRS; JPO)	OR	ON	ON	2022/09/23 04:50 PM
L614	25	("2006/0290107").urpn. AND (PGPB | USPT | USOC).dbnm.	(US-PGPUB; USPAT; USOCR)	OR	ON	ON	2022/09/23 04:50 PM
L615	11538	544 543	(US-PGPUB; USPAT; USOCR; FIT (AU, AP, AT, BE, BG, BR, BY, CA, CH, CN, CS, CU, CZ, DD, DE, DK, EA, EE, EP, ES, FI, FR, GB, HR, HU, ID, IE, IL, IS, IT, JP, KR, LT, LU, LV, MA, OA, RU, SU, WO, MC, MD, MY, NL, NO, NZ, PH, PL, PT, RO, RS, SE, SG, SI, SK, TH, TN, TR, TW, UA, VN); FPRS; EPO; JPO)	OR	ON	ON	2022/09/23 05:10 PM
L616	75	615 AND 598	(US-PGPUB; USPAT; USOCR; FIT (AP, AT, AU, BE, BG, BR, BY, CA, CH, CN, CS, CU, CZ, DD, DE, DK, EA, EE, EP, ES, FI, FR, GB, HR, HU, ID, IE, IL, IS, IT, JP, KR, LT, LU, LV, MA, MC, MD, MY, NL, NO, NZ, OA, PH, PL, PT, RO, RS, RU, SE, SG, SI, SK, SU, TH, TN, TR, TW, UA, VN, WO); FPRS; EPO; JPO)	OR	ON	ON	2022/09/23 05:10 PM

L617	2793	615 AND (fold$ SAME pivot$)	(US-PGPUB; USPAT; USOCR; FIT (AP, AT, AU, BE, BG, BR, BY, CA, CH, CN, CS, CU, CZ, DD, DE, DK, EA, EE, EP, ES, FI, FR, GB, HR, HU, ID, IE, IL, IS, IT, JP, KR, LT, LU, LV, MA, MC, MD, MY, NL, NO, NZ, OA, PH, PL, PT, RO, RS, RU, SE, SG, SI, SK, SU, TH, TN, TR, TW, UA, VN, WO); FPRS; EPO; JPO)	OR	ON	ON	2022/09/23 05:10 PM
L618	610	615 AND (fold$ near2 pivot$)	(US-PGPUB; USPAT; USOCR; FIT (AP, AT, AU, BE, BG, BR, BY, CA, CH, CN, CS, CU, CZ, DD, DE, DK, EA, EE, EP, ES, FI, FR, GB, HR, HU, ID, IE, IL, IS, IT, JP, KR, LT, LU, LV, MA, MC, MD, MY, NL, NO, NZ, OA, PH, PL, PT, RO, RS, RU, SE, SG, SI, SK, SU, TH, TN, TR, TW, UA, VN, WO); FPRS; EPO; JPO)	OR	ON	ON	2022/09/23 05:10 PM
L619	26	601 AND (fold$ near2 pivot$)	(US-PGPUB; USPAT; USOCR; FIT (AP, AT, AU, BE, BG, BR, BY, CA, CH, CN, CS, CU, CZ, DD, DE, DK, EA, EE, EP, ES, FI, FR, GB, HR, HU, ID, IE, IL, IS, IT, JP, KR, LT, LU, LV, MA, MC, MD, MY, NL, NO, NZ, OA, PH, PL, PT, RO, RS, RU, SE, SG, SI, SK, SU, TH, TN, TR, TW, UA, VN, WO); FPRS; EPO; JPO)	OR	ON	ON	2022/09/23 05:11 PM
L620	62	("2986400" | "4216974" | "4294464" | "4544178" | "4614454" | "4834403" | "5257799" | "6086086" | "6095548" | "6102431" | "6102432" | "6105998" | "6270111" | "6869096" | "6991248" | "7077420" | "7185909" | "7237795" | "7296820" | "7396039" | "7404569" | "7614641" | "7632035" | "7712765"	(US-PGPUB; USPAT; USOCR)	OR	ON	ON	2022/09/23 05:27 PM

		| "7798500" | "7798515" | "7832755" | "7832756" | "8087689" | "8205907" | "8251382" | "8444170" | "20060038378" | "20060082104" | "20070063487" | "20070075525" | "20070096434").pn. OR ("8714581").urpn. AND (PGPB | USPT | USOC).dbnm.					
L621	30	("10449987" OR "10556610" OR "10899377" OR "11091186" OR "11192568" OR "11203371" OR "11208135" OR "11208136" OR "11220282" OR "11292499" OR "11338836" OR "5167425" OR "5338096" OR "5988670" OR "6045145" OR "6086087" OR "6267406" OR "6286844" OR "6513827" OR "7377537" OR "7475900" OR "7563170" OR "7938435" OR "7971897" OR "8313115" OR "8602441" OR "9403550" OR "D429476" OR "D430076" OR "D593459").pn.	(US-PGPUB; USPAT)	OR	ON	ON	2022/09/29 10:54 AM
L622	240	((US-20100052277-A1 OR US-20070114738-A1 OR US-20070001429-A1 OR US-20060290107-A1 OR US-20030075903-A1 OR US-20080303232-A1 OR US-20070085303-A1 OR US-20060131841-A1 OR US-20060001226-A1 OR US-20080224451-A1 OR US-20010033069-A1 OR US-	(US-PGPUB; USPAT; USOCR; FIT (AP, AT, AU, BE, BG, BR, BY, CA, CH, CN, CS, CU, CZ, DD, DE, DK, EA, EE, EP, ES, FI, FR, GB, HR, HU, ID, IE, IL, IS, IT, JP, KR, LT, LU, LV, MA, MC, MD, MY, NL, NO, NZ, OA, PH, PL, PT, RO, RS, RU, SE, SG, SI, SK, SU, TH, TN, TR, TW, UA, VN, WO); FPRS; EPO; JPO; DERWENT;	OR	ON	ON	2022/09/29 10:59 AM

		20030025304-A1 OR US-20070187914-A1 OR US-20070069505-A1 OR US-20080231022-A1 OR US-20100301585-A1 OR US-20100013281-A1 OR US-20150360709-A1 OR US-20070069504-A1 OR US-20100072732-A1 OR US-20090302578-A1 OR US-20130113188-A1 OR US-20090243261-A1 OR US-20130049331-A1 OR US-20160001805-A1 OR US-20040164593-A1 OR US-20070075525-A1 OR US-20130087993-A1 OR US-20140191483-A1 OR US-20070090619-A1 OR US-20020109321-A1 OR US-20100140902-A1 OR US-20180229750-A1 OR US-20170158219-A1 OR US-20160075363-A1 OR US-20150061249-A1 OR US-20120228843-A1 OR US-20080179848-A1 OR US-20080150247-A1 OR US-20050006864-A1 OR US-20150232114-A1).did. AND PGPB.dbnm.) OR ((US-5338096-A OR US-6045145-A OR US-3223431-A OR US-6378892-B1 OR US-5653460-A OR US-6209892-B1 OR US-5201535-A OR US-4620711-A OR US-6676140-B1 OR US-6017051-A OR US-1707186-A OR US-7475900-B2 OR US-7938435-B2 OR US-D508443-S OR US-7497461-B2 OR US-4570956-A OR US-6923467-B2 OR US-	IBM_TDB)				

		6752405-B1 OR US- 8157273-B2 OR US- 7896384-B2 OR US- 7677585-B2 OR US- 8128103-B1 OR US- 7597332-B2 OR US- 7481439-B2 OR US- 6851693-B2 OR US- 5848797-A OR US- 3000645-A OR US- 8070180-B2 OR US- 7832755-B2 OR US- 7261308-B2 OR US- 5704627-A OR US- 5794951-A OR US- 5647601-A OR US- 2453631-A OR US- 6443467-B1 OR US- 8205906-B2 OR US- 8262103-B2 OR US- 8336904-B2 OR US- 8371606-B2 OR US- 8251382-B2 OR US- 7377537-B2 OR US- 7320471-B2 OR US- 7032922-B1 OR US- 7367581-B2 OR US- 8029007-B2 OR US- 7699325-B2 OR US- 6827356-B2 OR US- 8398098-B2 OR US- 7766366-B2 OR US- 6286844-B1 OR US- 6513827-B1 OR US- 8764048-B1 OR US- 8061732-B2 OR US- 8733784-B2 OR US- 8696016-B2 OR US- 8231136-B2 OR US- 8458880-B2 OR US- 7249779-B2 OR US- 7311323-B1 OR US- 8444171-B2 OR US- 8033554-B2 OR US- 7681894-B2 OR US- 8955869-B2 OR US- 8905427-B2 OR US- 8882134-B2 OR US- 8029014-B2 OR US- 7789402-B2 OR US- 7658399-B2 OR US- 5167425-A OR US- 8936261-B2 OR US- 9010773-B2 OR US- 9119483-B1 OR US- 9200746-B2 OR US- 9199659-B2 OR US- 9108659-B2 OR US-					

		9073563-B2 OR US- 9242665-B2 OR US- 7401803-B1 OR US- 9227650-B2 OR US- 9260128-B2 OR US- 9260127-B2 OR US- 8857830-B2 OR US- 2769482-A OR US- 4542915-A OR US- 6715783-B1 OR US- 9108654-B2 OR US- 9630642-B2 OR US- 9517787-B2 OR US- 9327752-B2 OR US- 6561526-B1 OR US- 8967171-B2 OR US- 9517789-B2 OR US- 9561817-B2 OR US- 6447001-B1 OR US- 5522121-A OR US- 9545941-B2 OR US- 9056622-B2 OR US- 9403550-B2 OR US- 8899615-B2 OR US- 7364183-B2 OR US- 9637155-B1 OR US- 9421992-B2 OR US- 9545940-B2 OR US- 9346378-B2 OR US- 8678498-B2 OR US- 4915446-A OR US- 4634177-A OR US- 4306749-A OR US- 8851505-B2 OR US- 8651502-B2 OR US- 6893040-B2 OR US- 6446990-B1 OR US- 5865447-A OR US- 5772279-A OR US- 5567008-A OR US- 8657326-B2 OR US- 8491000-B2 OR US- 6155740-A OR US- 5947555-A OR US- 7267359-B1 OR US- 9776652-B2 OR US- 9771095-B2 OR US- 9725106-B2 OR US- 9701333-B2 OR US- 8585075-B2 OR US- 8596670-B2 OR US- 9956979-B1 OR US- 9944305-B2 OR US- 9924806-B2 OR US- 9884640-B2 OR US- 9849903-B1 OR US- 9840168-B2 OR US- 10207731-B2 OR US-					

		10023218-B2 OR US- 6938906-B1 OR US- D593459-S OR US- D621306-S OR US- 8328208-B2 OR US- 7513512-B2 OR US- 10293843-B2 OR US- 10556611-B2 OR US- 10556610-B2 OR US- 10449987-B2 OR US- 10730543-B2 OR US- 10926785-B2 OR US- 10899377-B2 OR US- 10974754-B2 OR US- 10994763-B2 OR US- 11001289-B2 OR US- 11059510-B2 OR US- 11052933-B2 OR US- 8844964-B2 OR US- 6086087-A OR US- 9643640-B2 OR US- 9616912-B2 OR US- 9283978-B2 OR US- 9050987-B2 OR US- 9004524-B1 OR US- 8857829-B2 OR US- 8807588-B2 OR US- 8708364-B2 OR US- 8684395-B2 OR US- 8602441-B2 OR US- 8505958-B2 OR US- 8480115-B2 OR US- 8322745-B2 OR US- 6585284-B2 OR US- 6267406-B1 OR US- 11091186-B2 OR US- 11052934-B2 OR US- 10960913-B2 OR US- 8313115-B2 OR US- 10322739-B2 OR US- 7971897-B2 OR US- 7614640-B2 OR US- 8205894-B2 OR US- 6981709-B2 OR US- 6935652-B2 OR US- 3998490-A OR US- 11220282-B2 OR US- 11208136-B2 OR US- 11208135-B2 OR US- 11203371-B2 OR US- 11192568-B2 OR US- 11338836-B2 OR US- 11292499-B2 OR US- 10077063-B2 OR US- 11370468-B2 OR US- 8714581-B2 OR US- 4216974-A OR US- 4544178-A OR US-					

		4834403-A OR US-6102431-A OR US-6102432-A OR US-6991248-B2).did. AND USPT.dbnm.) OR ((US-3000645-A OR US-2453631-A OR US-1707186-A).did. AND USOC.dbnm.) OR ((US-20050006864-A1).did. AND DWPI.dbnm.)					
L623	26	622 AND 621	(US-PGPUB; USPAT)	OR	ON	ON	2022/09/29 11:00 AM
L624	4	621 NOT 622	(US-PGPUB; USPAT)	OR	ON	ON	2022/09/29 11:00 AM
L625	1	("20100013281").pn.	(US-PGPUB; USPAT; USOCR)	OR	ON	ON	2022/09/29 11:34 AM
L626	1	("20230065661").pn.	(US-PGPUB; USPAT; USOCR)	OR	ON	ON	2023/09/07 11:00 PM
L627	63	(Baby near2 Jogger).AS.	(US-PGPUB; USPAT; USOCR; FIT (AU, AP, AT, BE, BG, BR, BY, CA, CH, CN, CS, CU, CZ, DD, DE, DK, EA, EE, EP, ES, FI, FR, GB, HR, HU, ID, IE, IL, IS, IT, JP, KR, LT, LU, LV, MA, OA, RU, SU, WO, MC, MD, MY, NL, NO, NZ, PH, PL, PT, RO, RS, SE, SG, SI, SK, TH, TN, TR, TW, UA, VN); FPRS; EPO; JPO; DERWENT)	OR	ON	ON	2023/09/08 12:02 AM
L628	84	(Zehfuss near2 Mark).in.	(US-PGPUB; USPAT; USOCR; FIT (AU, AP, AT, BE, BG, BR, BY, CA, CH, CN, CS, CU, CZ, DD, DE, DK, EA, EE, EP, ES, FI, FR, GB, HR, HU, ID, IE, IL, IS, IT, JP, KR, LT, LU, LV, MA, OA, RU, SU, WO, MC, MD, MY, NL, NO, NZ, PH, PL, PT, RO, RS, SE, SG, SI, SK, TH, TN, TR, TW, UA, VN); FPRS; EPO; JPO; DERWENT)	OR	ON	ON	2023/09/08 12:03 AM
L629	7822	(B62B7/008,00,006,14, 142,145).CPC.	(US-PGPUB; USPAT; USOCR; FIT (AU, AP, AT, BE, BG, BR, BY, CA, CH, CN, CS, CU, CZ, DD, DE, DK, EA, EE, EP, ES, FI, FR, GB, HR, HU, ID, IE, IL, IS,	OR	ON	ON	2023/09/08 12:18 AM

			IT, JP, KR, LT, LU, LV, MA, OA, RU, SU, WO, MC, MD, MY, NL, NO, NZ, PH, PL, PT, RO, RS, SE, SG, SI, SK, TH, TN, TR, TW, UA, VN); FPRS; EPO; JPO)				
L630	7381	(B62B9/12,28,102).CPC.	(US-PGPUB; USPAT; USOCR; FIT (AU, AP, AT, BE, BG, BR, BY, CA, CH, CN, CS, CU, CZ, DD, DE, DK, EA, EE, EP, ES, FI, FR, GB, HR, HU, ID, IE, IL, IS, IT, JP, KR, LT, LU, LV, MA, OA, RU, SU, WO, MC, MD, MY, NL, NO, NZ, PH, PL, PT, RO, RS, SE, SG, SI, SK, TH, TN, TR, TW, UA, VN); FPRS; EPO; JPO)	OR	ON	ON	2023/09/08 12:18 AM
L631	6996106	@pd>="20220923"	(US-PGPUB; USPAT; USOCR; FIT (AP, AT, AU, BE, BG, BR, BY, CA, CH, CN, CS, CU, CZ, DD, DE, DK, EA, EE, EP, ES, FI, FR, GB, HR, HU, ID, IE, IL, IS, IT, JP, KR, LT, LU, LV, MA, MC, MD, MY, NL, NO, NZ, OA, PH, PL, PT, RO, RS, RU, SE, SG, SI, SK, SU, TH, TN, TR, TW, UA, VN, WO); FPRS; EPO; JPO)	OR	ON	ON	2023/09/08 12:19 AM
L632	12521	629 630	(US-PGPUB; USPAT; USOCR; FIT (AP, AT, AU, BE, BG, BR, BY, CA, CH, CN, CS, CU, CZ, DD, DE, DK, EA, EE, EP, ES, FI, FR, GB, HR, HU, ID, IE, IL, IS, IT, JP, KR, LT, LU, LV, MA, MC, MD, MY, NL, NO, NZ, OA, PH, PL, PT, RO, RS, RU, SE, SG, SI, SK, SU, TH, TN, TR, TW, UA, VN, WO); FPRS; EPO; JPO)	OR	ON	ON	2023/09/08 12:19 AM
L633	443	631 AND 632	(US-PGPUB; USPAT; USOCR; FIT (AP, AT, AU, BE, BG, BR, BY, CA, CH, CN, CS, CU,	OR	ON	ON	2023/09/08 12:19 AM

			CZ, DD, DE, DK, EA, EE, EP, ES, FI, FR, GB, HR, HU, ID, IE, IL, IS, IT, JP, KR, LT, LU, LV, MA, MC, MD, MY, NL, NO, NZ, OA, PH, PL, PT, RO, RS, RU, SE, SG, SI, SK, SU, TH, TN, TR, TW, UA, VN, WO); FPRS; EPO; JPO)				
L634	24	("6267406" | "6286844" | "6513827" | "7377537" | "7475900" | "D593459" | "7971897" | "8313115" | "8602441" | "10449987" | "10556610" | "10899377" | "11091186" | "11192568" | "11203371" | "11208135" | "11208136" | "11220282" | "11292499" | "11338836" | "11370468" | "11505231" | "11572093" | "11577771").pn. OR ("11731682").urpn. AND (PGPB | USPT | USOC).dbnm.	(US-PGPUB; USPAT; USOCR)	OR	ON	ON	2023/09/08 12:22 AM
L635	48	("4216974" | "4544178" | "5167425" | "5338096" | "5988670" | "6045145" | "6086087" | "D429476" | "D430076" | "6102431" | "6102432" | "6209892" | "6267406" | "6286844" | "6513827" | "6991248" | "7377537" | "7475900" | "D593459" | "7563170" | "7938435" | "7971897" | "8313115" | "8602441" | "9403550" | "9840168" | "9849903" | "9884640" | "9924806" | "9944305" | "9956979" | "10207731" | "10449987" | "10556610" | "10899377" | "11091186" | "11192568" | "11203371" |	(US-PGPUB; USPAT; USOCR)	OR	ON	ON	2023/09/08 12:23 AM

		"11208135" | "11208136" | "11220282" | "11292499" | "11338836" | "11370468" | "11505231" | "20060290107" | "20100013281").pn. OR ("11577771").urpn. AND (PGPB | USPT | USOC).dbnm.					
L636	48	("4216974" | "4544178" | "5167425" | "5338096" | "5988670" | "6045145" | "6086087" | "D429476" | "D430076" | "6102431" | "6102432" | "6209892" | "6267406" | "6286844" | "6513827" | "6991248" | "7377537" | "7475900" | "D593459" | "7563170" | "7938435" | "7971897" | "8313115" | "8602441" | "9403550" | "9840168" | "9849903" | "9884640" | "9924806" | "9944305" | "9956979" | "10207731" | "10449987" | "10556610" | "10899377" | "11091186" | "11192568" | "11203371" | "11208135" | "11208136" | "11220282" | "11292499" | "11338836" | "11370468" | "20060290107" | "20100013281").pn. OR ("11505231").urpn. AND (PGPB | USPT | USOC).dbnm.	(US-PGPUB; USPAT; USOCR)	OR	ON	ON	2023/09/08 12:24 AM
L637	46	("10207731" OR "10449987" OR "10556610" OR "10899377" OR "11091186" OR "11192568" OR "11203371" OR "11208135" OR "11208136" OR "11220282" OR "11292499" OR	(US-PGPUB; USPAT)	OR	ON	ON	2023/09/08 12:25 AM

		"11338836" OR "11370468" OR "20060290107" OR "20100013281" OR "4216974" OR "4544178" OR "5167425" OR "5338096" OR "5988670" OR "6045145" OR "6086087" OR "6102431" OR "6102432" OR "6209892" OR "6267406" OR "6286844" OR "6513827" OR "6991248" OR "7377537" OR "7475900" OR "7563170" OR "7938435" OR "7971897" OR "8313115" OR "8602441" OR "9403550" OR "9840168" OR "9849903" OR "9884640" OR "9924806" OR "9944305" OR "9956979" OR "D429476" OR "D430076" OR "D593459").pn.					
L638	0	("20230371642").PN.	(US-PGPUB; USPAT; USOCR)	OR	OFF	OFF	2023/09/08 02:36 PM
L639	1	("11505231").PN.	(US-PGPUB; USPAT; USOCR)	OR	OFF	OFF	2023/09/08 02:37 PM

PE2E SEARCH - Search History (Interference)

Ref #	Hits	Search Query	DBs	Default Operator	Plurals	British Equivalents	Time Stamp
N163	0	(A seat attachment for a stroller, comprising a separate left attachment portion, wherein the left attachment portion comprises a connector portion capable of removably connecting to a stroller frame adjacent a left front wheel of the stroller and a left seat support element removably	(US-PGPUB; USPAT)	AND	ON	ON	2014/02/03 05:17 PM

		connecting a seat in either a forward or backward position and a separate right attachment portion, wherein the right attachment portion comprises a connector portion capable of removably connecting to the stroller frame adjacent a right front wheel of the stroller and a right seat support element removably connecting the seat in either a forward or backward position between the left and right seat support elements).clm.					
N164	0	(seat attachment stroller separate left right attachment portion connector portion removably connecting frame adjacent front wheel seat support element removably connecting seat forward backward position).clm.	(US-PGPUB; USPAT)	AND	ON	ON	2014/02/04 09:35 AM
N165	0	(seat attach$4 stroller separate left right portion connect$4 remov$4 frame adjacent front wheel support$4 element forward backward position).clm.	(US-PGPUB; USPAT)	AND	ON	ON	2014/02/04 09:46 AM
N166	1	(seat attach$4 stroller separate left right connect$4 remov$4 frame wheel support$4).clm.	(US-PGPUB; USPAT)	AND	ON	ON	2014/02/04 09:46 AM
N167	19	(seat attach$4 stroller left right connect$4 remov$4 frame wheel).clm.	(US-PGPUB; USPAT)	AND	ON	ON	2014/02/04 09:47 AM
N213	0	(A seat attachment for a stroller, comprising a separate left attachment portion, wherein the left attachment portion comprises a connector portion capable of removably connecting	(US-PGPUB; USPAT)	AND	ON	ON	2014/09/24 02:26 PM

		to a stroller frame adjacent a left front wheel of the stroller and a left seat support element removably connecting a seat in either a forward or backward position and a separate right attachment portion, wherein the right attachment portion comprises a connector portion capable of removably connecting to the stroller frame adjacent a right front wheel of the stroller and a right seat support element removably connecting the seat in either a forward or backward position between the left and right seat support elements).clm.					
N214	1	(seat attach$4 stroller separate left right connect$4 remov$4 frame wheel support$4).clm.	(US-PGPUB; USPAT)	AND	ON	ON	2014/09/24 02:26 PM
N215	19	(seat attach$4 stroller left right connect$4 remov$4 frame wheel).clm.	(US-PGPUB; USPAT)	AND	ON	ON	2014/09/24 02:26 PM
N216	19	(seat$3 attach$4 stroller left right connect$4 remov$4 fram$3 wheel).clm.	(US-PGPUB; USPAT)	AND	ON	ON	2014/09/24 02:29 PM
N217	68	(seat$3 attach$4 stroller connect$4 remov$4 fram$3 wheel).clm.	(US-PGPUB; USPAT)	AND	ON	ON	2014/09/24 02:29 PM
N218	5	("20020036391" | "20070069505" | "20070187914" | "4753453" | "4779883").PN. OR ("8033554").URPN.	(US-PGPUB; USPAT)	OR	ON	ON	2014/09/24 02:32 PM
N248	4	(US-20070187914-$).did. or (US-7311323-$ or US-8444171-$ or US-8033554-$).did.	(US-PGPUB; USPAT)	OR	ON	ON	2015/04/20 02:14 PM
N411	0	(A stroller, comprising a stroller frame a plurality of wheels coupled to the stroller frame a first	(US-PGPUB; USPAT)	AND	ON	ON	2017/11/13 04:52 PM

		seat coupled to the stroller frame a first seat attachment housing disposed along a first portion of the stroller frame and comprising a first adapter receiving cavity extending through the first seat attachment housing and a first door rotatably coupled to the first seat attachment housing along a top end of the first adapter receiving cavity, wherein the first door rotates from a closed configuration, preventing access to the first adapter receiving cavity from a top side of the first seat attachment housing to an open configuration allowing access to the first adapter receiving cavity from the top side of the first seat attachment housing a second seat attachment housing disposed along a second portion of the stroller frame and comprising a second adapter receiving cavity extending through the second seat attachment housing and a second door rotatably coupled to the second seat attachment housing along a second top end of the second adapter receiving cavity, wherein the second door rotates from a second closed configuration, preventing access to the second adapter receiving cavity from a top side of the second seat attachment housing, to a second open configuration allowing access to the second adapter receiving cavity from					

		the top side of the second seat attachment housing a first removable seat attachment adapter removably coupled to the first seat attachment housing and a second removable seat attachment adapter removably coupled to the second seat attachment housing).CLM.					
N412	0	(stroller frame wheel seat attachment housing first adapter receiving cavity extending through housing first door rotatably coupled to housing closed configuration preventing access to cavity from top side open configuration allowing access to cavity first removable seat attachment adapter removably coupled to housing and second removable seat attachment adapter removably coupled to housing).CLM.	(US-PGPUB; USPAT)	AND	ON	ON	2017/11/13 04:55 PM
N413	1	(stroller frame wheel seat attach$4 hous$4 adapter receiv$4 cavity extend$4 door rotat$4 closed configuration prevent$4 access$4 open configuration allow$4 access).CLM.	(US-PGPUB; USPAT)	AND	ON	ON	2017/11/13 04:56 PM
N414	1	(stroller frame wheel seat attach$4 hous$4 adapter receiv$4 cavity door rotat$4 closed configuration prevent$4 access$4).CLM.	(US-PGPUB; USPAT)	AND	ON	ON	2017/11/13 05:21 PM
N415	1	(stroller wheel seat attach$4 hous$4 cavity door closed configuration prevent$4 access$4).CLM.	(US-PGPUB; USPAT)	AND	ON	ON	2017/11/13 05:22 PM
N416	1	(stroller wheel seat attach$4 hous$4 cavity	(US-PGPUB; USPAT)	AND	ON	ON	2017/11/13 05:22 PM

		door clos$4 access$4).CLM.					
N417	1	(stroller seat attach$4 hous$4 cavity door clos$4 access$4).CLM.	(US-PGPUB; USPAT)	AND	ON	ON	2017/11/13 05:23 PM
N418	1	(stroller seat$3 attach$4 cavity door clos$4 access$4).CLM.	(US-PGPUB; USPAT)	AND	ON	ON	2017/11/13 05:24 PM
N419	1	(stroller seat$3 cavity door clos$4 access$4).CLM.	(US-PGPUB; USPAT)	AND	ON	ON	2017/11/13 05:24 PM
N420	3	(stroller seat$3 door clos$4 access$4).CLM.	(US-PGPUB; USPAT)	AND	ON	ON	2017/11/13 05:24 PM
N421	2	(stroller seat$3 cavit$3 clos$4 access$4).CLM.	(US-PGPUB; USPAT)	AND	ON	ON	2017/11/13 05:26 PM
N422	21	(stroller seat$3 cavit$3 clos$4).CLM.	(US-PGPUB; USPAT)	AND	ON	ON	2017/11/13 05:26 PM
N442	5	(US-20090243261-$).did. or (US-7938435-$ or US-6447001-$ or US-8585075-$ or US-8596670-$).did.	(US-PGPUB; USPAT)	OR	ON	ON	2019/04/15 11:03 AM
N463	2	(US-20090243261-$).did. or (US-6447001-$).did.	(US-PGPUB; USPAT)	OR	ON	ON	2019/08/23 01:02 AM
N477	2	(US-20090243261-$).did. or (US-6447001-$).did.	(US-PGPUB; USPAT)	OR	ON	ON	2020/03/01 11:02 PM
N478	0	(A stroller, comprising a stroller frame comprising a first upper tube support frame a second upper tube support frame a first front wheel support frame rotatable with respect to the first upper tube support frame a second front wheel support frame rotatable with respect to the second upper tube support frame a first back wheel support frame rotatable with respect to the first upper tube support frame a second back wheel support frame rotatable with respect to the second upper tube support frame a plurality of wheels comprising at least one front wheel and a plurality of back	(US-PGPUB; USPAT)	AND	ON	ON	2020/03/11 11:05 PM

		wheels a first seat coupled to the stroller frame at a first vertical position of the stroller frame a first seat attachment housing disposed along the first front wheel support frame a first seat attachment adapter removably coupled to the first seat attachment housing stroller frame at a second vertical position of the stroller frame that is below the first vertical position a second seat attachment housing disposed along the second front wheel support frame a second seat attachment adapter removably coupled to the second seat attachment housing at a third vertical position of the stroller frame that is below the first vertical position wherein the first seat is coupled along the first upper tube support frame and the second upper tube support frame and wherein a second seat is removably coupled to the first seat attachment adapter and the second seat attachment adapter to position the second seat at a fourth vertical position that is below the first vertical position).CLM.					
N479	1	(stroller frame wheel first seat first vertical position attachment housing adapter removably coupled below).CLM.	(US-PGPUB; USPAT)	AND	ON	ON	2020/03/11 11:07 PM
N480	1	(stroller frame wheel seat vertical position attach$4 hous$4 adapt$4 remov$4 coupl$4 below).CLM.	(US-PGPUB; USPAT)	AND	ON	ON	2020/03/11 11:10 PM
N481	4	(stroller frame wheel	(US-PGPUB; USPAT)	AND	ON	ON	2020/03/11

		seat attach$4 hous$4 adapt$4 remov$4 coupl$4).CLM.					11:10 PM
N482	11	(stroller frame wheel seat attach$4 adapt$4 remov$4 coupl$4).CLM.	(US-PGPUB; USPAT)	AND	ON	ON	2020/03/11 11:11 PM
N483	33	(stroller frame wheel seat attach$4 adapt$4 remov$4).CLM.	(US-PGPUB; USPAT)	AND	ON	ON	2020/03/11 11:12 PM
N498	2	(US-20090243261-$).did. or (US-6447001-$).did.	(US-PGPUB; USPAT)	OR	ON	ON	2020/09/10 02:56 PM
N519	37	(stroller frame wheel seat attach$4 adapt$4 remov$4).CLM.	(US-PGPUB; USPAT)	AND	ON	ON	2021/07/02 08:50 PM
N520	37	(stroller frame wheel seat attach$4 adapt$4 remov$4).CLM.	(US-PGPUB; USPAT)	AND	ON	ON	2021/07/02 08:50 PM
N521	0	N519 not N520	(US-PGPUB; USPAT)	AND	ON	ON	2021/07/02 08:50 PM
N532	0	(A stroller, comprising a stroller frame comprising a first upper tube support frame a second upper tube support frame a front wheel support frame rotatably adjusted to be substantially parallel with respect to the first upper tube support frame when the stroller frame is unfolded from a folded configuration a back wheel support frame rotatably adjusted to be substantially parallel with respect to the first upper tube support frame when the stroller frame is unfolded from a folded configuration a plurality of wheels comprising at least one front wheel and a plurality of back wheels a first seat coupled along the first upper tube support frame and the second upper tube support frame at a first vertical position of the stroller frame a first seat attachment adapter coupled to the front	(US-PGPUB; USPAT)	AND	ON	ON	2021/08/12 04:23 PM

		wheel support frame at a second vertical position of the stroller frame that is below the first vertical position a second seat attachment adapter coupled to the front wheel support frame at a third vertical position of the stroller frame that is below the first vertical position wherein a second seat is removably coupled to the first seat attachment adapter and the second seat attachment adapter to position the second seat at a fourth vertical position that is below the first vertical position).CLM.					
N533	0	(stroller frame wheel fold$4 seat$4 vertical$4 position$4 attach$4 adapter coupl$4).CLM.	(US-PGPUB; USPAT)	AND	ON	ON	2021/08/12 04:31 PM
N534	0	(stroller fram$4 wheel fold$4 seat$4 vertical$4 position$4 attach$4 adapter).CLM.	(US-PGPUB; USPAT)	AND	ON	ON	2021/08/12 04:34 PM
N535	54	(stroller fram$4 wheel fold$4 seat$4 vertical$4 position$4).CLM.	(US-PGPUB; USPAT)	AND	ON	ON	2021/08/12 04:35 PM
N536	70	("4834415" | "4886289" | "5018754" | "5167425" | "5417449" | "5664795" | "5769448").PN. OR ("6086087").URPN.	(US-PGPUB; USPAT)	OR	ON	ON	2021/08/12 04:51 PM
N537	32	("20010013688" | "20030020259" | "20060226635" | "20060290107" | "20090039620" | "20100038886" | "20100078916" | "20100244393" | "3223431" | "4542915" | "4725071" | "4858947" | "4886289" | "5221106" | "5333893" | "5417449" | "5624152" | "5887935" | "6086087" | "6267406" | "6530591" | "6843498" | "6935652" | "7475900" | "D360392").PN. OR ("8602441").URPN.	(US-PGPUB; USPAT)	OR	ON	ON	2021/08/12 05:01 PM

N538	0	(A stroller, comprising: a stroller frame; a plurality of wheels comprising at least one central wheel AND a plurality of back wheels; a first seat coupled to the stroller frame at a first vertical position of the stroller frame AND configured to hold a first child in the stroller; a first seat attachment housing coupled to the stroller frame at a second vertical position of the stroller frame that is below the first vertical position, wherein a first front wheel extends from a front of the stroller; a second seat attachment housing coupled to the stroller frame at a third vertical position of the stroller frame that is below the first vertical position, wherein a second front wheel extends from the front of the stroller; wherein a first seat attachment adapter is coupled to the first seat attachment housing AND wherein a second seat attachment adapter is coupled to the second seat attachment housing).CLM.	(US-PGPUB; USPAT)	AND	ON	ON	2022/02/02 06:30 PM
N539	0	(stroller frame wheel central$ wheel back seat attach$ housing vertical position front wheel adapter coupled).CLM.	(US-PGPUB; USPAT)	AND	ON	ON	2022/02/03 08:56 AM
N540	0	(stroller frame wheel central$ back seat attach$ housing front adapter coupled).CLM.	(US-PGPUB; USPAT)	AND	ON	ON	2022/02/03 09:19 AM
N541	0	(stroller frame wheel central$ seat attach$ front adapter coupled).CLM.	(US-PGPUB; USPAT)	AND	ON	ON	2022/02/03 09:19 AM
N542	1	(stroller frame wheel central$ seat attach$	(US-PGPUB; USPAT)	AND	ON	ON	2022/02/03 09:19 AM

		front adapter).CLM.					
N543	34	(stroller frame wheel central$ seat attach$ front).CLM.	(US-PGPUB; USPAT)	AND	ON	ON	2022/02/03 09:19 AM
N544	0	(A stroller, comprising: a stroller frame; a plurality of wheels comprising a plurality of back wheels; a first seat coupled to the stroller frame at a first vertical position of the stroller frame a first seat attachment housing coupled to the stroller frame at a second vertical position of the stroller frame that is below the first vertical position, wherein a first front wheel extends from a front of the stroller; a second seat attachment housing coupled to the stroller frame at a third vertical position of the stroller frame that is below the first vertical position, wherein a second front wheel extends from the front of the stroller; a first seat attachment adapter coupled to the first seat attachment housing; AND a second seat attachment adapter coupled to the second seat attachment housing).CLM.	(US-PGPUB; USPAT)	AND	ON	ON	2022/06/15 12:34 PM
N545	0	(stroller frame wheel seat first vertical position first seat attachment housing below first front wheel extends from a front of the stroller second front wheel extend$ from front of stroller first seat attachment adapter coupl$ to first seat attachment housing).CLM.	(US-PGPUB; USPAT)	AND	ON	ON	2022/06/15 12:42 PM
N546	0	(stroller frame wheel seat first vertical position first seat attachment housing	(US-PGPUB; USPAT)	AND	ON	ON	2022/06/15 12:43 PM

		below first front wheel extends from front of stroller second front wheel extend$ from front of stroller first seat attachment adapter coupl$ to first seat attachment housing).CLM.					
N547	2	(stroller frame wheel seat vertical$ position attach$ housing below front extend$ adapter coupl$).CLM.	(US-PGPUB; USPAT)	AND	ON	ON	2022/06/15 12:48 PM
N548	5	(stroller frame wheel seat$ vertical$ position attach$ housing adapter coupl$).CLM.	(US-PGPUB; USPAT)	AND	ON	ON	2022/06/15 12:53 PM
N549	0	(A stroller system for supporting a front stroller seat AND a rear stroller seat, the system comprising: a pair of rear wheels; a pair of front wheels; a frame including a handle portion, a rear wheel support portion, a front wheel support portion AND a folding mechanism connecting the front wheel support portion AND the handle portion in both an unfolded configuration AND in a folded configuration, wherein the folding mechanism connects the rear wheel support portion to the front wheel support portion AND the handle portion, wherein the frame includes a stroller seat support portion positioned at a first vertical position adjacent the handle portion, AND wherein the front wheel support portion AND the handle portion are substantially parallel when the frame is in the unfolded configuration; AND a front seat attachment configured for	(US-PGPUB; USPAT)	AND	ON	ON	2022/09/29 11:48 AM

		attachment to the front wheel support portion at a second vertical position substantially lower than the first vertical position, AND wherein the front seat attachment is configured to releasably connect to AND support the front stroller seat in either a forward-facing configuration OR a backward-facing configuration, AND wherein the front seat attachment is configured to support the front stroller seat substantially over the front wheels so that a center of gravity of the stroller system is between the front wheels AND the rear wheels; wherein the rear wheel support portion extends diagonally from the front wheel support portion when the frame is in the unfolded configuration, AND the rear wheel support portion is disposed adjacent to both the front wheel support portion AND the handle portion when the frame is in the folded configuration; AND wherein the stroller seat support portion positioned at the first vertical position AND the front seat attachment at the second vertical position create an inline descending configuration of the rear stroller seat AND the front stroller seat).CLM.					
N550	0	(stroller front seat rear seat rear wheelfront wheelsframe handle support portion folding mechanism connecting support portion	(US-PGPUB; USPAT)	AND	ON	ON	2022/09/29 12:20 PM

		unfolded configuration folded configuration stroller seat support portion first vertical position adjacent handle portion substantially parallel front seat attachment second vertical position substantially lower than first vertical position releasably connect support forward-facing configuration backward-facing configuration over front wheels inline descending configuration of rear stroller seat front stroller seat).CLM.					
N551	1	(stroller front seat$ rear wheel frame handle support$ fold$ mechanism connect$ configuration vertical$ position$ attach$ releas$).CLM.	(US-PGPUB; USPAT)	AND	ON	ON	2022/09/29 12:21 PM
N552	8	(stroller front seat$ rear wheel frame handle fold$ vertical$ position$ attach$ releas$).CLM.	(US-PGPUB; USPAT)	AND	ON	ON	2022/09/29 12:21 PM
N553	12	(stroller front seat$ rear wheel frame handle fold$ vertical$ position$ attach$).CLM.	(US-PGPUB; USPAT)	AND	ON	ON	2022/09/29 12:22 PM
N554	14	(stroller front seat$ rear wheel frame handle fold$ vertical$ attach$).CLM.	(US-PGPUB; USPAT)	AND	ON	ON	2022/09/29 12:23 PM
N555	36	(stroller front seat$ rear wheel frame handle fold$ vertical$).CLM.	(US-PGPUB; USPAT)	AND	ON	ON	2022/09/29 12:23 PM
N556	0	(A stroller system for supporting a front stroller seat AND a rear stroller seat, the system comprising: a pair of rear wheels; a pair of front wheels; a frame including a handle portion, a rear wheel support portion, a front wheel support portion, AND a folding mechanism connecting the front wheel support	(US-PGPUB; USPAT)	AND	ON	ON	2023/09/08 01:01 AM

		portion AND the handle portion in both an unfolded configuration AND in a folded configuration, wherein the frame includes a stroller seat support portion positioned at a first vertical position adjacent the handle portion, AND wherein the front wheel support portion AND the handle portion are substantially parallel when the frame is in the unfolded configuration; AND a front seat attachment configured for attachment to the front wheel support portion at a second vertical position substantially lower than the first vertical position, wherein the front seat attachment is configured to releasably connect to AND support the front stroller seat in either a forward-facing configuration OR a backward-facing configuration, wherein the front seat attachment is configured to support the front stroller seat substantially over the front wheels so that a center of gravity of the stroller system is between the front wheels AND the rear wheels; wherein the rear wheel support portion extends diagonally relative to the front wheel support portion when the frame is in the unfolded configuration, AND the rear wheel support portion is disposed adjacent to both the front wheel support portion AND the handle portion when the frame					

		is in the folded configuration; AND wherein the stroller seat support portion positioned at the first vertical position AND the front seat attachment at the second vertical position create an inline descending configuration of the rear stroller seat AND the front stroller seat).CLM.					
N557	44	(stroller front seat$ rear wheel frame handle fold$ vertical$).CLM.	(US-PGPUB; USPAT)	AND	ON	ON	2023/09/09 05:43 PM

Bibliographic Data

Application No: 18/051,053

Foreign Priority claimed: ○ Yes ◉ No

35 USC 119 (a-d) conditions met: ☐ Yes ☑ No ☐ Met After Allowance

Verified and Acknowledged: /JAMES M DOLAK/ (Examiner's Signature) [ ] (Initials)

Title: Removable Seat Attachments for Strollers

FILING or 371(c) DATE	CLASS	GROUP ART UNIT	ATTORNEY DOCKET NO.
10/31/2022	280	3618	
RULE			

APPLICANTS

Baby Jogger, LLC, Richmond, VA, UNITED STATES

INVENTORS

Mark Zehfuss, Glen Allen, VA, UNITED STATES

CONTINUING DATA

This application is a CON of 17877323 07/29/2022 PAT 11505231

17877323 is a CON of 16903292 06/16/2020 PAT 11731682

16903292 is a CON of 15912901 03/06/2018 PAT 10730543

15912901 is a CON of 15225326 08/01/2016 PAT 9944305

15225326 has PRO of 62311224 03/21/2016

15225326 is a CIP of 14597420 01/15/2015 PAT 9403550

14597420 is a CON of 14261558 04/25/2014 PAT 8955869

14261558 is a CON of 12631375 12/04/2009ABN

12631375 has PRO of 61119920 12/04/2008

FOREIGN APPLICATIONS

IF REQUIRED, FOREIGN LICENSE GRANTED**

11/21/2022

STATE OR COUNTRY

UNITED STATES

ADDRESS

FILING FEE RECEIVED

$2,020

Doc code: IDS
Doc description: Information Disclosure Statement (IDS) Filed

PTO/SB/08a (01-10)
Approved for use through 07/31/2012. OMB 0651-0031
U.S. Patent and Trademark Office; U.S. DEPARTMENT OF COMMERCE
Under the Paperwork Reduction Act of 1995, no persons are required to respond to a collection of information unless it contains a valid OMB control number.

INFORMATION DISCLOSURE STATEMENT BY APPLICANT

(Not for submission under 37 CFR 1.99)

Application Number	18051053
Filing Date	2022-10-31
First Named Inventor	Mark Zehfuss
Art Unit	TBD
Examiner Name	TBD
Attorney Docket Number	34757-2709

U.S.PATENTS

Examiner Initial*	Cite No	Patent Number	Kind Code[1]	Issue Date	Name of Patentee or Applicant of cited Document	Pages,Columns,Lines where Relevant Passages or Relevant Figures Appear
	1	6286844	B1	2001-09-11	Cone, II et al.	
	2	7475900	B2	2009-01-13	Cheng	
	3	7377537	B2	2008-05-27	Li	
	4	7563170	B2	2009-07-21	Bellows et al.	
	5	9403550	B2	2016-08-02	Zehfuss	
	6	D593459	S	2009-06-02	Liao	
	7	5988670	A	1999-11-23	Song et al.	
	8	6045145	A	2000-04-04	Lan	

INFORMATION DISCLOSURE STATEMENT BY APPLICANT (Not for submission under 37 CFR 1.99)		
	Application Number	18051053
	Filing Date	2022-10-31
	First Named Inventor	Mark Zehfuss
	Art Unit	TBD
	Examiner Name	TBD
	Attorney Docket Number	34757-2709

	9	7938435	B2	2011-05-10	Sousa et al.	
	10	D429476	S	2000-08-15	Gehr	
	11	D430076	S	2000-08-29	Gehr	
	12	6086087	A	2000-07-11	Yang	
	13	5338096	A	1994-08-16	Huang	
	14	5167425	A	1992-12-01	Chen	
	15	11338836	B2	2022-05-24	Perrot	
	16	11292499	B2	2022-04-05	Rolicki et al.	
	17	11220282	B2	2022-01-11	Chaudeurge	
	18	11208136	B2	2021-12-28	Taylor et al.	
	19	11208135	B2	2021-12-28	Haut et al.	

INFORMATION DISCLOSURE STATEMENT BY APPLICANT (Not for submission under 37 CFR 1.99)		
	Application Number	18051053
	Filing Date	2022-10-31
	First Named Inventor	Mark Zehfuss
	Art Unit	TBD
	Examiner Name	TBD
	Attorney Docket Number	34757-2709

	20	11203371	B2	2021-12-21	Zhong	
	21	11192568	B2	2021-12-07	Lee et al.	
	22	10556610	B2	2020-02-11	Rolicki et al.	
	23	10449987	B2	2019-10-22	Gibson	
	24	6513827	B1	2003-02-04	Barenbrug	
	25	10899377	B2	2021-01-26	Eggert-Crowe et al.	
	26	8602441	B2	2013-12-10	Li	
	27	6267406	B1	2001-07-31	Huang	
	28	11091186	B2	2021-08-17	Zhang	
	29	8313115	B2	2012-11-20	Cheng	
	30	7971897	B2	2011-07-05	Pike et al.	

INFORMATION DISCLOSURE STATEMENT BY APPLICANT (Not for submission under 37 CFR 1.99)		
	Application Number	18051053
	Filing Date	2022-10-31
	First Named Inventor	Mark Zehfuss
	Art Unit	TBD
	Examiner Name	TBD
	Attorney Docket Number	34757-2709

	31	9956979	B1	2018-05-01	Fernsten	
	32	9944305	B2	2018-04-17	Lee et al.	
	33	9924806	B2	2018-03-27	Penello et al.	
	34	9884640	B2	2018-02-06	Li	
	35	9849903	B1	2017-12-26	Lai	
	36	9840168	B2	2017-12-12	Yi et al.	
	37	10207731	B2	2019-02-19	Taylor et al.	
	38	6209892	B1	2001-04-03	Schaaf et al.	
	39	11370468	B2	2022-06-28	Young et al.	
	40	4216974	A	1980-08-12	Kassai	
	41	4544178	A	1985-10-01	Al-Sheikh et al.	

INFORMATION DISCLOSURE STATEMENT BY APPLICANT (Not for submission under 37 CFR 1.99)		
	Application Number	18051053
	Filing Date	2022-10-31
	First Named Inventor	Mark Zehfuss
	Art Unit	TBD
	Examiner Name	TBD
	Attorney Docket Number	34757-2709

	42	6102431	A	2000-08-15	Sutherland et al.	
	43	6102432	A	2000-08-15	Cheng	
	44	6991248	B2	2006-01-31	Valdez et al.	

If you wish to add additional U.S. Patent citation information please click the Add button.

U.S.PATENT APPLICATION PUBLICATIONS

Examiner Initial*	Cite No	Publication Number	Kind Code[1]	Publication Date	Name of Patentee or Applicant of cited Document	Pages,Columns,Lines where Relevant Passages or Relevant Figures Appear
	1	20060290107	A1	2006-12-28	Powers	
	2	20100013281	A1	2010-01-21	Chen et al.	

If you wish to add additional U.S. Published Application citation information please click the Add button.

FOREIGN PATENT DOCUMENTS

Examiner Initial*	Cite No	Foreign Document Number[3]	Country Code[2]	Kind Code[4]	Publication Date	Name of Patentee or Applicant of cited Document	Pages,Columns,Lines where Relevant Passages or Relevant Figures Appear	T[5]
	1	3463874	CN	S	2005-07-27	GOODBABY CHILD PRODUCTS CO LTD		☐
	2	000822556-0003	EU		2007-07-11	ABC Design GmbH		☐

INFORMATION DISCLOSURE STATEMENT BY APPLICANT (Not for submission under 37 CFR 1.99)		
	Application Number	18051053
	Filing Date	2022-10-31
	First Named Inventor	Mark Zehfuss
	Art Unit	TBD
	Examiner Name	TBD
	Attorney Docket Number	34757-2709

	3	001001572-0002	EU		2008-11-09	Unique Product and design Co., Ltd.		☐
	4	129880-0001	TW		2009-07-21	UNIQUE PRODUCT & DESIGN CO LTD		☐
	5	2188062	CN	Y	1995-01-25	HUANG MINGCHENG		☐
	6	2759883	CN	Y	2006-02-22	ZHENG HUANGYI		☐
	7	2784272	CN	Y	2006-05-31	SHEN HAIDONG		☐
	8	2841450	CN	Y	2006-11-29	GU JINGDE		☐
	9	101306695	CN	B	2010-11-10	LI ZEJUN		☐
	10	201214440	CN	Y	2009-04-01	LIU FENG		☐

If you wish to add additional Foreign Patent Document citation information please click the Add button

NON-PATENT LITERATURE DOCUMENTS

Examiner Initials*	Cite No	Include name of the author (in CAPITAL LETTERS), title of the article (when appropriate), title of the item (book, magazine, journal, serial, symposium, catalog, etc), date, pages(s), volume-issue number(s), publisher, city and/or country where published.	T[5]
	1		☐

If you wish to add additional non-patent literature document citation information please click the Add button

INFORMATION DISCLOSURE STATEMENT BY APPLICANT (Not for submission under 37 CFR 1.99)		
	Application Number	18051053
	Filing Date	2022-10-31
	First Named Inventor	Mark Zehfuss
	Art Unit	TBD
	Examiner Name	TBD
	Attorney Docket Number	34757-2709

EXAMINER SIGNATURE			
Examiner Signature	/JAMES M DOLAK/	Date Considered	09/08/2023

*EXAMINER: Initial if reference considered, whether or not citation is in conformance with MPEP 609. Draw line through a citation if not in conformance and not considered. Include copy of this form with next communication to applicant.

[1] See Kind Codes of USPTO Patent Documents at www.USPTO.GOV or MPEP 901.04. [2] Enter office that issued the document, by the two-letter code (WIPO Standard ST.3). [3] For Japanese patent documents, the indication of the year of the reign of the Emperor must precede the serial number of the patent document. [4] Kind of document by the appropriate symbols as indicated on the document under WIPO Standard ST.16 if possible. [5] Applicant is to place a check mark here if English language translation is attached.

INFORMATION DISCLOSURE STATEMENT BY APPLICANT

(Not for submission under 37 CFR 1.99)

Application Number	18051053
Filing Date	2022-10-31
First Named Inventor	Mark Zehfuss
Art Unit	TBD
Examiner Name	TBD
Attorney Docket Number	34757-2709

CERTIFICATION STATEMENT

Please see 37 CFR 1.97 and 1.98 to make the appropriate selection(s):

☐ That each item of information contained in the information disclosure statement was first cited in any communication from a foreign patent office in a counterpart foreign application not more than three months prior to the filing of the information disclosure statement. See 37 CFR 1.97(e)(1).

OR

☐ That no item of information contained in the information disclosure statement was cited in a communication from a foreign patent office in a counterpart foreign application, and, to the knowledge of the person signing the certification after making reasonable inquiry, no item of information contained in the information disclosure statement was known to any individual designated in 37 CFR 1.56(c) more than three months prior to the filing of the information disclosure statement. See 37 CFR 1.97(e)(2).

☐ See attached certification statement.

☐ The fee set forth in 37 CFR 1.17 (p) has been submitted herewith.

☒ A certification statement is not submitted herewith.

SIGNATURE

A signature of the applicant or representative is required in accordance with CFR 1.33, 10.18. Please see CFR 1.4(d) for the form of the signature.

Signature	/Umar R. Bakhsh/	Date (YYYY-MM-DD)	2022-10-31
Name/Print	Umar R. Bakhsh	Registration Number	67307

This collection of information is required by 37 CFR 1.97 and 1.98. The information is required to obtain or retain a benefit by the public which is to file (and by the USPTO to process) an application. Confidentiality is governed by 35 U.S.C. 122 and 37 CFR 1.14. This collection is estimated to take 1 hour to complete, including gathering, preparing and submitting the completed application form to the USPTO. Time will vary depending upon the individual case. Any comments on the amount of time you require to complete this form and/or suggestions for reducing this burden, should be sent to the Chief Information Officer, U.S. Patent and Trademark Office, U.S. Department of Commerce, P.O. Box 1450, Alexandria, VA 22313-1450. DO NOT SEND FEES OR COMPLETED FORMS TO THIS ADDRESS. **SEND TO: Commissioner for Patents, P.O. Box 1450, Alexandria, VA 22313-1450.**

Privacy Act Statement

The Privacy Act of 1974 (P.L. 93-579) requires that you be given certain information in connection with your submission of the attached form related to a patent application or patent. Accordingly, pursuant to the requirements of the Act, please be advised that: (1) the general authority for the collection of this information is 35 U.S.C. 2(b)(2); (2) furnishing of the information solicited is voluntary; and (3) the principal purpose for which the information is used by the U.S. Patent and Trademark Office is to process and/or examine your submission related to a patent application or patent. If you do not furnish the requested information, the U.S. Patent and Trademark Office may not be able to process and/or examine your submission, which may result in termination of proceedings or abandonment of the application or expiration of the patent.

The information provided by you in this form will be subject to the following routine uses:

1. The information on this form will be treated confidentially to the extent allowed under the Freedom of Information Act (5 U.S.C. 552) and the Privacy Act (5 U.S.C. 552a). Records from this system of records may be disclosed to the Department of Justice to determine whether the Freedom of Information Act requires disclosure of these record s.

2. A record from this system of records may be disclosed, as a routine use, in the course of presenting evidence to a court, magistrate, or administrative tribunal, including disclosures to opposing counsel in the course of settlement negotiations.

3. A record in this system of records may be disclosed, as a routine use, to a Member of Congress submitting a request involving an individual, to whom the record pertains, when the individual has requested assistance from the Member with respect to the subject matter of the record.

4. A record in this system of records may be disclosed, as a routine use, to a contractor of the Agency having need for the information in order to perform a contract. Recipients of information shall be required to comply with the requirements of the Privacy Act of 1974, as amended, pursuant to 5 U.S.C. 552a(m).

5. A record related to an International Application filed under the Patent Cooperation Treaty in this system of records may be disclosed, as a routine use, to the International Bureau of the World Intellectual Property Organization, pursuant to the Patent Cooperation Treaty.

6. A record in this system of records may be disclosed, as a routine use, to another federal agency for purposes of National Security review (35 U.S.C. 181) and for review pursuant to the Atomic Energy Act (42 U.S.C. 218(c)).

7. A record from this system of records may be disclosed, as a routine use, to the Administrator, General Services, or his/her designee, during an inspection of records conducted by GSA as part of that agency's responsibility to recommend improvements in records management practices and programs, under authority of 44 U.S.C. 2904 and 2906. Such disclosure shall be made in accordance with the GSA regulations governing inspection of records for this purpose, and any other relevant (i.e., GSA or Commerce) directive. Such disclosure shall not be used to make determinations about individuals.

8. A record from this system of records may be disclosed, as a routine use, to the public after either publication of the application pursuant to 35 U.S.C. 122(b) or issuance of a patent pursuant to 35 U.S.C. 151. Further, a record may be disclosed, subject to the limitations of 37 CFR 1.14, as a routine use, to the public if the record was filed in an application which became abandoned or in which the proceedings were terminated and which application is referenced by either a published application, an application open to public inspections or an issued patent.

9. A record from this system of records may be disclosed, as a routine use, to a Federal, State, or local law enforcement agency, if the USPTO becomes aware of a violation or potential violation of law or regulation.

UNITED STATES PATENT AND TRADEMARK OFFICE

UNITED STATES DEPARTMENT OF COMMERCE
United States Patent and Trademark Office
Address: COMMISSIONER FOR PATENTS
P.O. Box 1450
Alexandria, Virginia 22313-1450
www.uspto.gov

APPLICATION NUMBER	FILING OR 371(C) DATE	FIRST NAMED APPLICANT	ATTY. DOCKET NO./TITLE
18/051,053	10/31/2022	Mark Zehfuss	34757-2709

CONFIRMATION NO. 6816

PUBLICATION NOTICE

OC000000137499089

134811
Eversheds Sutherland (US) LLP/NWL
999 Peachtree Street
Suite 2300
Atlanta, GA 30309

Title: Removable Seat Attachments for Strollers

Publication No.US-2023-0065661-A1
Publication Date:03/02/2023

NOTICE OF PUBLICATION OF APPLICATION

The above-identified application will be electronically published as a patent application publication pursuant to 37 CFR 1.211, et seq. The patent application publication number and publication date are set forth above.

The publication may be accessed through the USPTO's publically available Searchable Databases via the Internet at www.uspto.gov. The direct link to access the publication is currently http://www.uspto.gov/patft/.

The publication process established by the Office does not provide for mailing a copy of the publication to applicant. A copy of the publication may be obtained from the Office upon payment of the appropriate fee set forth in 37 CFR 1.19(a)(1). Orders for copies of patent application publications are handled by the USPTO's Public Records Division. The Public Records Division can be reached by telephone at (571) 272-3150 or (800) 972-6382, by facsimile at (571) 273-3250, by mail addressed to the United States Patent and Trademark Office, Public Records Division, Alexandria, VA 22313-1450 or via the Internet.

In addition, information on the status of the application, including the mailing date of Office actions and the dates of receipt of correspondence filed in the Office, may also be accessed via the Internet through the Patent Electronic Business Center at www.uspto.gov using the public side of the Patent Application Information and Retrieval (PAIR) system. The direct link to access this status information is currently https://portal.uspto.gov/pair/PublicPair. Prior to publication, such status information is confidential and may only be obtained by applicant using the private side of PAIR.

Further assistance in electronically accessing the publication, or about PAIR, is available by calling the Patent Electronic Business Center at 1-866-217-9197.

Office of Data Managment, Application Assistance Unit (571) 272-4000, or (571) 272-4200, or 1-888-786-0101

UNITED STATES PATENT AND TRADEMARK OFFICE

UNITED STATES DEPARTMENT OF COMMERCE
United States Patent and Trademark Office
Address: COMMISSIONER FOR PATENTS
P.O. Box 1450
Alexandria, Virginia 22313-1450
www.uspto.gov

APPLICATION NUMBER	FILING or 371(c) DATE	GRP ART UNIT	FIL FEE REC'D	ATTY.DOCKET.NO	TOT CLAIMS	IND CLAIMS
18/051,053	10/31/2022		2020	34757-2709CON	22	1

CONFIRMATION NO. 6816

FILING RECEIPT

OC000000051025900

134811
Eversheds Sutherland (US) LLP/NWL
999 Peachtree Street
Suite 2300
Atlanta, GA 30309

Date Mailed: 11/25/2022

Receipt is acknowledged of this non-provisional utility patent application. The application will be taken up for examination in due course. Applicant will be notified as to the results of the examination. Any correspondence concerning the application must include the following identification information: the U.S. APPLICATION NUMBER, FILING DATE, NAME OF FIRST INVENTOR, and TITLE OF INVENTION. Fees transmitted by check or draft are subject to collection.

Please verify the accuracy of the data presented on this receipt. If an error is noted on this Filing Receipt, please submit a written request for a corrected Filing Receipt, including a properly marked-up ADS showing the changes with strike-through for deletions and underlining for additions. If you received a "Notice to File Missing Parts" or other Notice requiring a response for this application, please submit any request for correction to this Filing Receipt with your reply to the Notice. When the USPTO processes the reply to the Notice, the USPTO will generate another Filing Receipt incorporating the requested corrections provided that the request is grantable.

Inventor(s)

Mark Zehfuss, Glen Allen, VA;

Applicant(s)

Baby Jogger, LLC, Atlanta, GA;

Assignment For Published Patent Application

Baby Jogger, LLC, Atlanta, GA

Power of Attorney: The patent practitioners associated with Customer Number 134811

Domestic Priority data as claimed by applicant

This application is a CON of 17/877,323 07/29/2022 PAT 11,505,231
which is a CON of 16/903,292 06/16/2020
which is a CON of 15/912,901 03/06/2018 PAT 10,730,543
which is a CON of 15/225,326 08/01/2016 PAT 9,944,305
which claims benefit of 62/311,224 03/21/2016
and is a CIP of 14/597,420 01/15/2015 PAT 9,403,550
which is a CON of 14/261,558 04/25/2014 PAT 8,955,869
which is a CON of 12/631,375 12/04/2009 ABN
which claims benefit of 61/119,920 12/04/2008

Foreign Applications for which priority is claimed (You may be eligible to benefit from the **Patent Prosecution Highway** program at the USPTO. Please see http://www.uspto.gov for more information.) - None.
Foreign application information must be provided in an Application Data Sheet in order to constitute a claim to foreign priority. See 37 CFR 1.55 and 1.76.

Permission to Access Application via Priority Document Exchange: Yes

Permission to Access Search Results: Yes

Applicant may provide or rescind an authorization for access using Form PTO/SB/39 or Form PTO/SB/69 as appropriate.

If Required, Foreign Filing License Granted: 11/21/2022

The country code and number of your priority application, to be used for filing abroad under the Paris Convention, is **US 18/051,053**

Projected Publication Date: 03/02/2023

Non-Publication Request: No

Early Publication Request: No
Title

Removable Seat Attachments for Strollers

Preliminary Class

Statement under 37 CFR 1.55 or 1.78 for AIA (First Inventor to File) Transition Applications: No

PROTECTING YOUR INVENTION OUTSIDE THE UNITED STATES

Since the rights granted by a U.S. patent extend only throughout the territory of the United States and have no effect in a foreign country, an inventor who wishes patent protection in another country must apply for a patent in a specific country or in regional patent offices. Applicants may wish to consider the filing of an international application under the Patent Cooperation Treaty (PCT). An international (PCT) application generally has the same effect as a regular national patent application in each PCT-member country. The PCT process **simplifies** the filing of patent applications on the same invention in member countries, but **does not result** in a grant of "an international patent" and does not eliminate the need of applicants to file additional documents and fees in countries where patent protection is desired.

Almost every country has its own patent law, and a person desiring a patent in a particular country must make an application for patent in that country in accordance with its particular laws. Since the laws of many countries differ in various respects from the patent law of the United States, applicants are advised to seek guidance from specific foreign countries to ensure that patent rights are not lost prematurely.

Applicants also are advised that in the case of inventions made in the United States, the Director of the USPTO must issue a license before applicants can apply for a patent in a foreign country. The filing of a U.S. patent application serves as a request for a foreign filing license. The application's filing receipt contains further information and guidance as to the status of applicant's license for foreign filing.

Applicants may wish to consult the USPTO booklet, "General Information Concerning Patents" (specifically, the section entitled "Treaties and Foreign Patents") for more information on timeframes and deadlines for filing foreign patent applications. The guide is available either by contacting the USPTO Contact Center at 800-786-9199, or it can be viewed on the USPTO website at http://www.uspto.gov/web/offices/pac/doc/general/index.html.

For information on preventing theft of your intellectual property (patents, trademarks and copyrights), you may wish to consult the U.S. Government website, http://www.stopfakes.gov. Part of a Department of Commerce initiative, this website includes self-help "toolkits" giving innovators guidance on how to protect intellectual property in specific countries such as China, Korea and Mexico. For questions regarding patent enforcement issues, applicants may call the U.S. Government hotline at 1-866-999-HALT (1-866-999-4258).

LICENSE FOR FOREIGN FILING UNDER

Title 35, United States Code, Section 184

Title 37, Code of Federal Regulations, 5.11 & 5.15

GRANTED

The applicant has been granted a license under 35 U.S.C. 184, if the phrase "IF REQUIRED, FOREIGN FILING LICENSE GRANTED" followed by a date appears on this form. Such licenses are issued in all applications where the conditions for issuance of a license have been met, regardless of whether or not a license may be required as set forth in 37 CFR 5.15. The scope and limitations of this license are set forth in 37 CFR 5.15(a) unless an earlier license has been issued under 37 CFR 5.15(b). The license is subject to revocation upon written notification. The date indicated is the effective date of the license, unless an earlier license of similar scope has been granted under 37 CFR 5.13 or 5.14.

This license is to be retained by the licensee and may be used at any time on or after the effective date thereof unless it is revoked. This license is automatically transferred to any related applications(s) filed under 37 CFR 1.53(d). This license is not retroactive.

The grant of a license does not in any way lessen the responsibility of a licensee for the security of the subject matter as imposed by any Government contract or the provisions of existing laws relating to espionage and the national security or the export of technical data. Licensees should apprise themselves of current regulations especially with respect to certain countries, of other agencies, particularly the Office of Defense Trade Controls, Department of State (with respect to Arms, Munitions and Implements of War (22 CFR 121-128)); the Bureau of Industry and Security, Department of Commerce (15 CFR parts 730-774); the Office of Foreign AssetsControl, Department of Treasury (31 CFR Parts 500+) and the Department of Energy.

NOT GRANTED

No license under 35 U.S.C. 184 has been granted at this time, if the phrase "IF REQUIRED, FOREIGN FILING LICENSE GRANTED" DOES NOT appear on this form. Applicant may still petition for a license under 37 CFR 5.12, if a license is desired before the expiration of 6 months from the filing date of the application. If 6 months has lapsed from the filing date of this application and the licensee has not received any indication of a secrecy order under 35 U.S.C. 181, the licensee may foreign file the application pursuant to 37 CFR 5.15(b).

SelectUSA

The United States represents the largest, most dynamic marketplace in the world and is an unparalleled location for business investment, innovation, and commercialization of new technologies. The U.S. offers tremendous resources and advantages for those who invest and manufacture goods here. Through SelectUSA, our nation works to promote and facilitate business investment. SelectUSA provides information assistance to the international investor

community; serves as an ombudsman for existing and potential investors; advocates on behalf of U.S. cities, states, and regions competing for global investment; and counsels U.S. economic development organizations on investment attraction best practices. To learn more about why the United States is the best country in the world to develop technology, manufacture products, deliver services, and grow your business, visit http://www.SelectUSA.gov or call +1-202-482-6800.

PATENT APPLICATION FEE DETERMINATION RECORD

Substitute for Form PTO-875

Application or Docket Number
18/051,053

APPLICATION AS FILED - PART I

FOR	(Column 1) NUMBER FILED	(Column 2) NUMBER EXTRA	SMALL ENTITY RATE($)	SMALL ENTITY FEE($)	OR	OTHER THAN SMALL ENTITY RATE($)	OTHER THAN SMALL ENTITY FEE($)
BASIC FEE (37 CFR 1.16(a), (b), or (c))	N/A	N/A	N/A			N/A	320
SEARCH FEE (37 CFR 1.16(k), (i), or (m))	N/A	N/A	N/A			N/A	700
EXAMINATION FEE (37 CFR 1.16(o), (p), or (q))	N/A	N/A	N/A			N/A	800
TOTAL CLAIMS (37 CFR 1.16(i))	22 minus 20 =	* 2			OR	x 100 =	200
INDEPENDENT CLAIMS (37 CFR 1.16(h))	1 minus 3 =	*				x =	0
APPLICATION SIZE FEE (37 CFR 1.16(s))	If the specification and drawings exceed 100 sheets of paper, the application size fee due is $310 ($155 for small entity) for each additional 50 sheets or fraction thereof. See 35 U.S.C. 41(a)(1)(G) and 37 CFR 1.16(s).						0
MULTIPLE DEPENDENT CLAIM PRESENT (37 CFR 1.16(j))							0
* If the difference in column 1 is less than zero, enter "0" in column 2.			TOTAL			TOTAL	1820

APPLICATION AS AMENDED - PART II

		(Column 1) CLAIMS REMAINING AFTER AMENDMENT		(Column 2) HIGHEST NUMBER PREVIOUSLY PAID FOR	(Column 3) PRESENT EXTRA	SMALL ENTITY RATE($)	SMALL ENTITY ADDITIONAL FEE($)	OR	OTHER THAN SMALL ENTITY RATE($)	OTHER THAN SMALL ENTITY ADDITIONAL FEE($)
AMENDMENT A	Total (37 CFR 1.16(i))	*	Minus	**	=	x =		OR	x =	
AMENDMENT A	Independent (37 CFR 1.16(h))	*	Minus	***	=	x =		OR	x =	
AMENDMENT A	Application Size Fee (37 CFR 1.16(s))									
AMENDMENT A	FIRST PRESENTATION OF MULTIPLE DEPENDENT CLAIM (37 CFR 1.16(j))							OR		
						TOTAL ADD'L FEE		OR	TOTAL ADD'L FEE	

		(Column 1) CLAIMS REMAINING AFTER AMENDMENT		(Column 2) HIGHEST NUMBER PREVIOUSLY PAID FOR	(Column 3) PRESENT EXTRA	RATE($)	ADDITIONAL FEE($)	OR	RATE($)	ADDITIONAL FEE($)
AMENDMENT B	Total (37 CFR 1.16(i))	*	Minus	**	=	x =		OR	x =	
AMENDMENT B	Independent (37 CFR 1.16(h))	*	Minus	***	=	x =		OR	x =	
AMENDMENT B	Application Size Fee (37 CFR 1.16(s))									
AMENDMENT B	FIRST PRESENTATION OF MULTIPLE DEPENDENT CLAIM (37 CFR 1.16(j))							OR		
						TOTAL ADD'L FEE		OR	TOTAL ADD'L FEE	

* If the entry in column 1 is less than the entry in column 2, write "0" in column 3.
** If the "Highest Number Previously Paid For" IN THIS SPACE is less than 20, enter "20".
*** If the "Highest Number Previously Paid For" IN THIS SPACE is less than 3, enter "3".
The "Highest Number Previously Paid For" (Total or Independent) is the highest found in the appropriate box in column 1.

EVENFLO ET AL. EX1023

IN THE UNITED STATES PATENT AND TRADEMARK OFFICE

In re Application of:		)	
	Mark Zehfuss	)	Examiner: **TBD**
		)	
Appl. No.:	**18/051,053**	)	Art Group Unit: **TBD**
		)	
Filed:	**October 31, 2022**	)	Conf. No. **6816**
		)	
For:	**Removable Seat Attachments for Strollers**	)	Docket No. **34757-2709**

SUBMISSION OF MARKED APPLICATION DATA SHEET

VIA EFS
Commissioner for Patents
P. O. Box 1450
Alexandria, VA 22313-1450

Sir:

Pursuant to 37 C.F.R. § 1.76(c), Applicant submits a new Application Data Sheet which corrects the address of the Applicant. The corrections are marked on the new Application Data Sheet, filed herewith, by strikethrough and underlining as follows:

Baby Jogger, LLC	Baby Jogger, LLC
~~8575 Magellan Parkway, Suite 1000~~	6655 Peachtree Dunwoody Road
~~Richmond, VA, 23227~~	Atlanta, GA, 30328

Applicant believes no fees are due. However, should there be any fees associated with this filing, the Commissioner is hereby, authorized to charge Deposit Account No. 19-5029.

Respectfully submitted,

Date: November 7, 2022

/Umar R. Bakhsh/
Umar R. Bakhsh
Reg. No. 67,307

EVERSHEDS SUTHERLAND (US) LLP
999 Peachtree Street N.E., Suite 2300
Atlanta, Georgia 30309-3996
Telephone: (404)-853-8009

48050625.1

Application Data Sheet 37 CFR 1.76

The Application Data Sheet is part of the provisional or non-provisional application for which it is being submitted. The following form contains the bibliographic data arranged in a format specified by the United States Patent and Trademark Office as outlined in 37 CFR 1.76.

Inventor Information

of inventors: 1

1. **Mark Zehfuss**

Residence Information
US Residency
Glen Allen, VA
UNITED STATES

Mailing Address
10804 Cherry Hill Drive
Glen Allen, VA 23059
UNITED STATES

Application Information

Customer number	**134811 -**
Correspondence address	---
Title of invention	**Removable Seat Attachments for Strollers**
Attorney docket number	**34757-2679CON**
Entity status	Regular Undiscounted
Application type	Nonprovisional Application under 35 USC 111(a)

Subject matter	Utility
Total number of drawing sheets	18
Suggested figure for publication	---
Filing by reference	No
Publication request	Normal eighteen-month publication

Representative Information

of representatives: 1

Representative information should be provided for all practitioners having a power of attorney in the application. Providing this information in the Application Data Sheet does not constitute a power of attorney in the application (see 37 CFR 1.32).

Customer number 134811

Domestic Benefit/National Stage Information

of benefit claims: 9

This section allows for the applicant to either claim benefit under 35 U.S.C. 119(e), 120, 121, or 365(c), 386(c), or indicate National Stage entry from a PCT application. Providing benefit claim information in the Application Data Sheet constitutes the specific reference required by 35 U.S.C. 119(e) or 120, and 37 CFR 1.78(a)(2) or CFR 1.78(a)(4), and need not otherwise be made part of the specification.

Prior app status	Pending
Application number	---
Continuity type	**Continuation of**
Prior app number	**17877323**
Filing Date	07/29/2022

Prior app status	Pending
Application number	**17877323**
Continuity type	**Continuation of**

Prior app number	**16903292**
Filing Date	06/16/2020

Prior app status	Patented
Application number	**16903292**
Continuity type	**Continuation of**
Prior app number	**15912901**
Filing Date	03/06/2018
Patent number	10730543
Issue date	08/04/2020

Prior app status	Patented
Application number	**15912901**
Continuity type	**Continuation of**
Prior app number	**15225326**
Filing Date	08/01/2016
Patent number	9944305
Issue date	04/17/2018

Prior app status	Expired
Application number	**15225326**
Continuity type	**Claims benefit of provisional**
Prior app number	**62311224**
Filing Date	03/21/2016

Prior app status	Patented
Application number	**15225326**
Continuity type	**Continuation in part of**
Prior app number	**14597420**
Filing Date	01/15/2015
Patent number	9403550
Issue date	08/02/2016

Prior app status	Patented
Application number	**14597420**

Continuity type	**Continuation of**
Prior app number	**14261558**
Filing Date	04/25/2014
Patent number	8955869
Issue date	02/17/2015

Prior app status	Abandoned
Application number	**14261558**
Continuity type	**Continuation of**
Prior app number	**12631375**
Filing Date	12/04/2009

Prior app status	Expired
Application number	**12631375**
Continuity type	**Claims benefit of provisional**
Prior app number	**61119920**
Filing Date	12/04/2008

Foreign Priority Information

of foreign priority claims: 0

This section allows for the applicant to claim benefit of foreign priority and to identify any prior foreign application for which priority is not claimed. Providing this information in the Application Data Sheet constitutes the claim for priority as required by 35 U.S.C. 119 (b) and 37 CFR 1.55. When priority is claimed to a foreign application that is eligible for retrieval under the priority document exchange program (PDX) the information will be used by the Office to automatically attempt retrieval pursuant to 37 CFR 1.55(i)(1) and (2). Under the PDX program, applicant bears the ultimate responsibility for ensuring that a copy of the foreign application is received by the Office from the participating foreign intellectual property office, or a certified copy of the foreign priority application is filed, within the time period specified in 37 CFR 1.55(g)(1).

Data was not provided for this section.

Statement under 37 CFR 1.55 or 1.78 for AIA (First Inventor to File) Transition Applications

Checking this box will cause the application to be examined under the first inventor to file provisions of the AIA.

☐ This application (1) claims priority to or the benefit of an application filed before March 16, 2013 and (2) also contains, or contained at any time, a claim to a claimed invention that has an effective filing date on or after March 16, 2013. NOTE: By providing this statement under 37 CFR 1.55 or 1.78, this application, with a filing date on or after March 2016, 2013, will be examined under the first inventor to file provisions of the AIA.

Authorization or Opt-Out of Authorization to Permit Access

When this Application Data Sheet is properly signed and filed with the application, applicant has provided written authority to permit a participating foreign intellectual property (IP) office access to the instant application-as-filed (see paragraph A in subsection 1 below) and the European Patent Office (EPO) access to any search results from the instant application (see paragraph B in subsection 1 below).

Should applicant choose not to provide an authorization identified in subsection 1 below, applicant **must opt-out** of the authorization by checking the corresponding box A or B or both in subsection 2 below.

NOTE:
This section of the Application Data Sheet is **ONLY** reviewed and processed with the **INITIAL** filing of an application. After the initial filing of an application, an Application Data Sheet cannot be used to provide or rescind authorization for access by a foreign IP office(s). Instead, Form PTO/SB/39 or PTO/SB/69 must be used as appropriate.

1. Authorization to Permit Access by a Foreign Intellectual Property Office(s)

A. **Priority Document Exchange (PDX)**
Unless box A in subsection 2 (opt-out of authorization) is checked, the undersigned hereby **grants the USPTO authority** to provide the European Patent Office (EPO), the Japan Patent Office (JPO), the Korean Intellectual Property Office (KIPO), the State Intellectual Property Office of the People's Republic of China (SIPO), the World Intellectual Property Organization (WIPO), and any other foreign intellectual property office participating with the USPTO in a bilateral or multilateral priority document exchange agreement in which a foreign application claiming priority to the instant patent application is filed, access to: (1) the instant patent application-as-filed and its related bibliographic data, (2) any foreign or domestic application to which priority or benefit is claimed by the instant application and its related bibliographic data, and (3) the date of filing of this Authorization. See 37 CFR 1.14(h) (1).

B. **Search Results from U.S. Application to EPO**
Unless box B in subsection 2 (opt-out of authorization) is checked, the undersigned hereby **grants the USPTO authority** to provide the EPO access to the bibliographic data and search results from the instant patent application when a European patent application claiming priority to the instant patent application is filed. See 37 CFR 1.14(h)(2).

The applicant is reminded that the EPO's Rule 141(1) EPC (European Patent Convention) requires applicants to submit a copy of search results from the instant application without delay in a European patent application that claims priority to the instant application.

2. Opt-Out of Authorizations to Permit Access by a Foreign Intellectual Property Office(s)

☐ A. Applicant **DOES NOT** authorize the USPTO to permit a participating foreign IP office access to the instant application-as-filed. If this box is checked, the USPTO will not be providing a participating foreign IP office with any documents and information identified in subsection 1A above.

B. Applicant **DOES NOT** authorize the USPTO to transmit to the EPO any search results from the instant patent

application. If this box is checked, the USPTO will not be providing the EPO with the search results from the instant application.

NOTE:
Once the application has published or is otherwise publicly available, the USPTO may provide access to the application in accordance with 37 CFR 1.14.

Applicant Information

of applicants: 1

The information to be provided in this section is the name and address of the legal representative who is the applicant under 37 CFR 1.43; or the name and address of the assignee, person to whom the inventor is under an obligation to assign the invention, or person who otherwise shows sufficient proprietary interest in the matter who is the applicant under 37 CFR 1.46.

1. **Baby Jogger, LLC**
~~8575 Magellan Parkway, Suite 1000~~
~~Richmond, VA 23227~~
UNITED STATES
6655 Peachtree Dunwoody Road
Atlanta, GA, 30328

Phone: ---
Fax: ---
Email: ---

Applicant Organization
Applicant type Assignee

Assignee Information including Non-Applicant Assignee Information

of assignees: 1

An assignee-applicant identified in the "Applicant" section will appear on the patent application as an applicant.

Providing assignment information in this section does not substitute for compliance with any requirement of part 3 of Title 37 of CFR to have an assignment recorded by the Office.

Baby Jogger, LLC
~~8575 Magellan Parkway, Suite 1000~~
~~Richmond, VA 23227~~
UNITED STATES
6655 Peachtree Dunwoody Road
Atlanta, GA, 30328

Organization

Signature

NOTE:

This Application Data Sheet must be signed in accordance with 37 CFR 1.33(b). **However, if this Application Data Sheet is submitted with the INITIAL filing of the application and either box A or B is not checked in subsection 2 of the "Authorization or Opt-Out of Authorization to Permit Access" section, then this form must also be signed in accordance with 37 CFR 1.14(c)**

This Application Data Sheet **must** be signed by a patent practitioner if one or more of the applicants is a **juristic entity** (e.g., corporation or association). If the applicant is two or more joint inventors, this form must be signed by a patent practitioner, **all** joint inventors who are the applicant, or one or more joint inventor-applicants who have been given power of attorney (e.g., see USPTO Form PTO/AIA/81) on behalf of **all** joint inventor-applicants.

See CFR 1.4(d) for the manner of making signatures and certifications.

Signature	First name	Last name	Registration #	Date
/Umar Bakhsh/	Umar	Bakhsh	67307	10/31/2022

Electronic Acknowledgement Receipt

EFS ID:	46971774
Application Number:	18051053
International Application Number:	
Confirmation Number:	6816
Title of Invention:	Removable Seat Attachments for Strollers
First Named Inventor/Applicant Name:	Mark Zehfuss
Customer Number:	134811
Filer:	Umar Rahim Bakhsh/Angela Staschke
Filer Authorized By:	Umar Rahim Bakhsh
Attorney Docket Number:	34757-2709
Receipt Date:	07-NOV-2022
Filing Date:	
Time Stamp:	12:36:01
Application Type:	Utility under 35 USC 111(a)

Payment information:

Submitted with Payment	no

File Listing:

Document Number	Document Description	File Name	File Size(Bytes)/ Message Digest	Multi Part /.zip	Pages (if appl.)
1	Request for Corrected Filing Receipt	34757-2709_RequestforCorrectedADS.pdf	473050 4aee7496b2fa98cea709de2a21fc07cafd194e49	no	1

Warnings:

Information:					
2	Application Data Sheet	34757-2709_MARKEDADS.PDF	818314 0cc726a1715233720b811c5997078c983e775689	no	7
Warnings:					
Information:					
This is not an USPTO supplied ADS fillable form					
			Total Files Size (in bytes):	1291364	

This Acknowledgement Receipt evidences receipt on the noted date by the USPTO of the indicated documents, characterized by the applicant, and including page counts, where applicable. It serves as evidence of receipt similar to a Post Card, as described in MPEP 503.

<u>New Applications Under 35 U.S.C. 111</u>
If a new application is being filed and the application includes the necessary components for a filing date (see 37 CFR 1.53(b)-(d) and MPEP 506), a Filing Receipt (37 CFR 1.54) will be issued in due course and the date shown on this Acknowledgement Receipt will establish the filing date of the application.
<u>National Stage of an International Application under 35 U.S.C. 371</u>
If a timely submission to enter the national stage of an international application is compliant with the conditions of 35 U.S.C. 371 and other applicable requirements a Form PCT/DO/EO/903 indicating acceptance of the application as a national stage submission under 35 U.S.C. 371 will be issued in addition to the Filing Receipt, in due course.
<u>New International Application Filed with the USPTO as a Receiving Office</u>
If a new international application is being filed and the international application includes the necessary components for an international filing date (see PCT Article 11 and MPEP 1810), a Notification of the International Application Number and of the International Filing Date (Form PCT/RO/105) will be issued in due course, subject to prescriptions concerning national security, and the date shown on this Acknowledgement Receipt will establish the international filing date of the application.

PTO/SB/08a (01-10)
Approved for use through 07/31/2012. OMB 0651-0031
U.S. Patent and Trademark Office; U.S. DEPARTMENT OF COMMERCE

Under the Paperwork Reduction Act of 1995, no persons are required to respond to a collection of information unless it contains a valid OMB control number.

INFORMATION DISCLOSURE STATEMENT BY APPLICANT

(Not for submission under 37 CFR 1.99)

Application Number	18051053
Filing Date	2022-10-31
First Named Inventor	Mark Zehfuss
Art Unit	TBD
Examiner Name	TBD
Attorney Docket Number	34757-2709

U.S.PATENTS

Examiner Initial*	Cite No	Patent Number	Kind Code[1]	Issue Date	Name of Patentee or Applicant of cited Document	Pages,Columns,Lines where Relevant Passages or Relevant Figures Appear
	1	6286844	B1	2001-09-11	Cone, II et al.	
	2	7475900	B2	2009-01-13	Cheng	
	3	7377537	B2	2008-05-27	Li	
	4	7563170	B2	2009-07-21	Bellows et al.	
	5	9403550	B2	2016-08-02	Zehfuss	
	6	D593459	S	2009-06-02	Liao	
	7	5988670	A	1999-11-23	Song et al.	
	8	6045145	A	2000-04-04	Lan	

	9	7938435	B2	2011-05-10	Sousa et al.	
	10	D429476	S	2000-08-15	Gehr	
	11	D430076	S	2000-08-29	Gehr	
	12	6086087	A	2000-07-11	Yang	
	13	5338096	A	1994-08-16	Huang	
	14	5167425	A	1992-12-01	Chen	
	15	11338836	B2	2022-05-24	Perrot	
	16	11292499	B2	2022-04-05	Rolicki et al.	
	17	11220282	B2	2022-01-11	Chaudeurge	
	18	11208136	B2	2021-12-28	Taylor et al.	
	19	11208135	B2	2021-12-28	Haut et al.	

	20	11203371	B2	2021-12-21	Zhong	
	21	11192568	B2	2021-12-07	Lee et al.	
	22	10556610	B2	2020-02-11	Rolicki et al.	
	23	10449987	B2	2019-10-22	Gibson	
	24	6513827	B1	2003-02-04	Barenbrug	
	25	10899377	B2	2021-01-26	Eggert-Crowe et al.	
	26	8602441	B2	2013-12-10	Li	
	27	6267406	B1	2001-07-31	Huang	
	28	11091186	B2	2021-08-17	Zhang	
	29	8313115	B2	2012-11-20	Cheng	
	30	7971897	B2	2011-07-05	Pike et al.	

	31	9956979	B1	2018-05-01	Fernsten	
	32	9944305	B2	2018-04-17	Lee et al.	
	33	9924806	B2	2018-03-27	Penello et al.	
	34	9884640	B2	2018-02-06	Li	
	35	9849903	B1	2017-12-26	Lai	
	36	9840168	B2	2017-12-12	Yi et al.	
	37	10207731	B2	2019-02-19	Taylor et al.	
	38	6209892	B1	2001-04-03	Schaaf et al.	
	39	11370468	B2	2022-06-28	Young et al.	
	40	4216974	A	1980-08-12	Kassai	
	41	4544178	A	1985-10-01	Al-Sheikh et al.	

INFORMATION DISCLOSURE STATEMENT BY APPLICANT (Not for submission under 37 CFR 1.99)		
	Application Number	18051053
	Filing Date	2022-10-31
	First Named Inventor	Mark Zehfuss
	Art Unit	TBD
	Examiner Name	TBD
	Attorney Docket Number	34757-2709

	42	6102431	A	2000-08-15	Sutherland et al.	
	43	6102432	A	2000-08-15	Cheng	
	44	6991248	B2	2006-01-31	Valdez et al.	

If you wish to add additional U.S. Patent citation information please click the Add button.

U.S.PATENT APPLICATION PUBLICATIONS

Examiner Initial*	Cite No	Publication Number	Kind Code[1]	Publication Date	Name of Patentee or Applicant of cited Document	Pages,Columns,Lines where Relevant Passages or Relevant Figures Appear
	1	20060290107	A1	2006-12-28	Powers	
	2	20100013281	A1	2010-01-21	Chen et al.	

If you wish to add additional U.S. Published Application citation information please click the Add button.

FOREIGN PATENT DOCUMENTS

Examiner Initial*	Cite No	Foreign Document Number[3]	Country Code[2] i	Kind Code[4]	Publication Date	Name of Patentee or Applicant of cited Document	Pages,Columns,Lines where Relevant Passages or Relevant Figures Appear	T[5]
	1	3463874	CN	S	2005-07-27	GOODBABY CHILD PRODUCTS CO LTD		☐
	2	000822556-0003	EU		2007-07-11	ABC Design GmbH		☐

INFORMATION DISCLOSURE STATEMENT BY APPLICANT (Not for submission under 37 CFR 1.99)		
	Application Number	18051053
	Filing Date	2022-10-31
	First Named Inventor	Mark Zehfuss
	Art Unit	TBD
	Examiner Name	TBD
	Attorney Docket Number	34757-2709

	3	001001572-0002	EU		2008-11-09	Unique Product and design Co., Ltd.		☐
	4	129880-0001	TW		2009-07-21	UNIQUE PRODUCT & DESIGN CO LTD		☐
	5	2188062	CN	Y	1995-01-25	HUANG MINGCHENG		☐
	6	2759883	CN	Y	2006-02-22	ZHENG HUANGYI		☐
	7	2784272	CN	Y	2006-05-31	SHEN HAIDONG		☐
	8	2841450	CN	Y	2006-11-29	GU JINGDE		☐
	9	101306695	CN	B	2010-11-10	LI ZEJUN		☐
	10	201214440	CN	Y	2009-04-01	LIU FENG		☐

If you wish to add additional Foreign Patent Document citation information please click the Add button

NON-PATENT LITERATURE DOCUMENTS

Examiner Initials*	Cite No	Include name of the author (in CAPITAL LETTERS), title of the article (when appropriate), title of the item (book, magazine, journal, serial, symposium, catalog, etc), date, pages(s), volume-issue number(s), publisher, city and/or country where published.	T[5]
	1		☐

If you wish to add additional non-patent literature document citation information please click the Add button

INFORMATION DISCLOSURE STATEMENT BY APPLICANT (Not for submission under 37 CFR 1.99)		
	Application Number	18051053
	Filing Date	2022-10-31
	First Named Inventor	Mark Zehfuss
	Art Unit	TBD
	Examiner Name	TBD
	Attorney Docket Number	34757-2709

EXAMINER SIGNATURE			
Examiner Signature		Date Considered	

*EXAMINER: Initial if reference considered, whether or not citation is in conformance with MPEP 609. Draw line through a citation if not in conformance and not considered. Include copy of this form with next communication to applicant.

[1] See Kind Codes of USPTO Patent Documents at www.USPTO.GOV or MPEP 901.04. [2] Enter office that issued the document, by the two-letter code (WIPO Standard ST.3). [3] For Japanese patent documents, the indication of the year of the reign of the Emperor must precede the serial number of the patent document. [4] Kind of document by the appropriate symbols as indicated on the document under WIPO Standard ST.16 if possible. [5] Applicant is to place a check mark here if English language translation is attached.

INFORMATION DISCLOSURE STATEMENT BY APPLICANT (Not for submission under 37 CFR 1.99)		
	Application Number	18051053
	Filing Date	2022-10-31
	First Named Inventor	Mark Zehfuss
	Art Unit	TBD
	Examiner Name	TBD
	Attorney Docket Number	34757-2709

CERTIFICATION STATEMENT

Please see 37 CFR 1.97 and 1.98 to make the appropriate selection(s):

☐ That each item of information contained in the information disclosure statement was first cited in any communication from a foreign patent office in a counterpart foreign application not more than three months prior to the filing of the information disclosure statement. See 37 CFR 1.97(e)(1).

OR

☐ That no item of information contained in the information disclosure statement was cited in a communication from a foreign patent office in a counterpart foreign application, and, to the knowledge of the person signing the certification after making reasonable inquiry, no item of information contained in the information disclosure statement was known to any individual designated in 37 CFR 1.56(c) more than three months prior to the filing of the information disclosure statement. See 37 CFR 1.97(e)(2).

☐ See attached certification statement.

☐ The fee set forth in 37 CFR 1.17 (p) has been submitted herewith.

☒ A certification statement is not submitted herewith.

SIGNATURE

A signature of the applicant or representative is required in accordance with CFR 1.33, 10.18. Please see CFR 1.4(d) for the form of the signature.

Signature	/Umar R. Bakhsh/	Date (YYYY-MM-DD)	2022-10-31
Name/Print	Umar R. Bakhsh	Registration Number	67307

This collection of information is required by 37 CFR 1.97 and 1.98. The information is required to obtain or retain a benefit by the public which is to file (and by the USPTO to process) an application. Confidentiality is governed by 35 U.S.C. 122 and 37 CFR 1.14. This collection is estimated to take 1 hour to complete, including gathering, preparing and submitting the completed application form to the USPTO. Time will vary depending upon the individual case. Any comments on the amount of time you require to complete this form and/or suggestions for reducing this burden, should be sent to the Chief Information Officer, U.S. Patent and Trademark Office, U.S. Department of Commerce, P.O. Box 1450, Alexandria, VA 22313-1450. DO NOT SEND FEES OR COMPLETED FORMS TO THIS ADDRESS. **SEND TO: Commissioner for Patents, P.O. Box 1450, Alexandria, VA 22313-1450.**

Privacy Act Statement

The Privacy Act of 1974 (P.L. 93-579) requires that you be given certain information in connection with your submission of the attached form related to a patent application or patent. Accordingly, pursuant to the requirements of the Act, please be advised that: (1) the general authority for the collection of this information is 35 U.S.C. 2(b)(2); (2) furnishing of the information solicited is voluntary; and (3) the principal purpose for which the information is used by the U.S. Patent and Trademark Office is to process and/or examine your submission related to a patent application or patent. If you do not furnish the requested information, the U.S. Patent and Trademark Office may not be able to process and/or examine your submission, which may result in termination of proceedings or abandonment of the application or expiration of the patent.

The information provided by you in this form will be subject to the following routine uses:

1. The information on this form will be treated confidentially to the extent allowed under the Freedom of Information Act (5 U.S.C. 552) and the Privacy Act (5 U.S.C. 552a). Records from this system of records may be disclosed to the Department of Justice to determine whether the Freedom of Information Act requires disclosure of these record s.

2. A record from this system of records may be disclosed, as a routine use, in the course of presenting evidence to a court, magistrate, or administrative tribunal, including disclosures to opposing counsel in the course of settlement negotiations.

3. A record in this system of records may be disclosed, as a routine use, to a Member of Congress submitting a request involving an individual, to whom the record pertains, when the individual has requested assistance from the Member with respect to the subject matter of the record.

4. A record in this system of records may be disclosed, as a routine use, to a contractor of the Agency having need for the information in order to perform a contract. Recipients of information shall be required to comply with the requirements of the Privacy Act of 1974, as amended, pursuant to 5 U.S.C. 552a(m).

5. A record related to an International Application filed under the Patent Cooperation Treaty in this system of records may be disclosed, as a routine use, to the International Bureau of the World Intellectual Property Organization, pursuant to the Patent Cooperation Treaty.

6. A record in this system of records may be disclosed, as a routine use, to another federal agency for purposes of National Security review (35 U.S.C. 181) and for review pursuant to the Atomic Energy Act (42 U.S.C. 218(c)).

7. A record from this system of records may be disclosed, as a routine use, to the Administrator, General Services, or his/her designee, during an inspection of records conducted by GSA as part of that agency's responsibility to recommend improvements in records management practices and programs, under authority of 44 U.S.C. 2904 and 2906. Such disclosure shall be made in accordance with the GSA regulations governing inspection of records for this purpose, and any other relevant (i.e., GSA or Commerce) directive. Such disclosure shall not be used to make determinations about individuals.

8. A record from this system of records may be disclosed, as a routine use, to the public after either publication of the application pursuant to 35 U.S.C. 122(b) or issuance of a patent pursuant to 35 U.S.C. 151. Further, a record may be disclosed, subject to the limitations of 37 CFR 1.14, as a routine use, to the public if the record was filed in an application which became abandoned or in which the proceedings were terminated and which application is referenced by either a published application, an application open to public inspections or an issued patent.

9. A record from this system of records may be disclosed, as a routine use, to a Federal, State, or local law enforcement agency, if the USPTO becomes aware of a violation or potential violation of law or regulation.

IN THE UNITED STATES PATENT AND TRADEMARK OFFICE

In re Application of:	)	
	)	Customer No.: **134811**
Per ZEHFUSS *et al.*	)	
	)	Confirmation No.: **6816**
Serial No.: **18/051,053**	)	
	)	Art Unit: **TBD**
Filing Date: **October 31, 2022**	)	
	)	Examiner: **TBD**
For: Removable Seat Attachments for Strollers	)	
	)	Attorney Docket No.: **34757-2709**
	)	

IDS TRANSMITTAL LETTER
PURSUANT TO 37 C.F.R. §§ 1.56, 1.97, AND 1.98

Commissioner for Patents
P.O. Box 1450
Alexandria, VA 22313-1450

Commissioner:

The examiner is requested to consider the patents, patent applications, publications, and other information compiled on the enclosed SB/08a; during the examination of the above patent application. The order of the references should not be interpreted as an indication of importance. These references are submitted for the Examiner's consideration and are pursuant to the Applicant's duty of disclosure under 37 C.F.R. § 1.56.

Copies of all of the cited references have been previously submitted to the Office in prior Application No. 17/877,323, filed July 29, 2022, which the current application relies on for an earlier effective filing date under 35 U.S.C. § 120. Therefore, no copies of the cited documents are attached pursuant to 37 C.F.R. § 1.98(d); MPEP § 609(III)(A)(2).

Respectfully submitted,
/Umar R. Bakhsh/
Umar R. Bakhsh
Reg. No. 67,307

DATE: **October 31, 2022**
EVERSHEDS SUTHERLAND (US) LLP
999 Peachtree Street NE
Atlanta, Georgia 30309-3996
(404) 853-8084

Electronic Acknowledgement Receipt

EFS ID:	46928972
Application Number:	18051053
International Application Number:	
Confirmation Number:	6816
Title of Invention:	Removable Seat Attachments for Strollers
First Named Inventor/Applicant Name:	Mark Zehfuss
Customer Number:	134811
Filer:	Umar Rahim Bakhsh
Filer Authorized By:	
Attorney Docket Number:	34757-2709
Receipt Date:	31-OCT-2022
Filing Date:	
Time Stamp:	16:53:01
Application Type:	Utility under 35 USC 111(a)

Payment information:

Submitted with Payment	no

File Listing:

Document Number	Document Description	File Name	File Size(Bytes)/ Message Digest	Multi Part /.zip	Pages (if appl.)
1	Power of Attorney	34757-2709_POA_.pdf	715084 5d2db0d93611e61181f4a082ffbc43adc5c2cd24	no	2

Warnings:

Information:					
2	Information Disclosure Statement (IDS) Form (SB08)	34757-2709_IDS_.pdf	457560 7d73988ebe76c3d5ee9ee7c844db87a9524de06b	no	9
Warnings:					
Information:					
This is not an USPTO supplied IDS fillable form					
3	Transmittal Letter	34757-2709_IDS_Transmittal_Parent_App_.pdf	476369 b185330b237c0daa77f99b829c07ca146849f317	no	1
Warnings:					
Information:					
			Total Files Size (in bytes):	1649013	

This Acknowledgement Receipt evidences receipt on the noted date by the USPTO of the indicated documents, characterized by the applicant, and including page counts, where applicable. It serves as evidence of receipt similar to a Post Card, as described in MPEP 503.

<u>New Applications Under 35 U.S.C. 111</u>
If a new application is being filed and the application includes the necessary components for a filing date (see 37 CFR 1.53(b)-(d) and MPEP 506), a Filing Receipt (37 CFR 1.54) will be issued in due course and the date shown on this Acknowledgement Receipt will establish the filing date of the application.
<u>National Stage of an International Application under 35 U.S.C. 371</u>
If a timely submission to enter the national stage of an international application is compliant with the conditions of 35 U.S.C. 371 and other applicable requirements a Form PCT/DO/EO/903 indicating acceptance of the application as a national stage submission under 35 U.S.C. 371 will be issued in addition to the Filing Receipt, in due course.
<u>New International Application Filed with the USPTO as a Receiving Office</u>
If a new international application is being filed and the international application includes the necessary components for an international filing date (see PCT Article 11 and MPEP 1810), a Notification of the International Application Number and of the International Filing Date (Form PCT/RO/105) will be issued in due course, subject to prescriptions concerning national security, and the date shown on this Acknowledgement Receipt will establish the international filing date of the application.

PTO/AIA/82A (07-13)
Approved for use through 11/30/2014. OMB 0651-0051
U.S. Patent and Trademark Office; U.S. DEPARTMENT OF COMMERCE
Under the Paperwork Reduction Act of 1995, no persons are required to respond to a collection of information unless it displays a valid OMB control number.

TRANSMITTAL FOR POWER OF ATTORNEY TO ONE OR MORE REGISTERED PRACTITIONERS

NOTE: This form is to be submitted with the Power of Attorney by Applicant form (PTO/AIA/82B) to identify the application to which the Power of Attorney is directed, in accordance with 37 CFR 1.5, unless the application number and filing date are identified in the Power of Attorney by Applicant form. If neither form PTO/AIA/82A nor form PTO/AIA82B identifies the application to which the Power of Attorney is directed, the Power of Attorney will not be recognized in the application.

Application Number	18/051,053
Filing Date	2022-10-31
First Named Inventor	Mark Zehfuss
Title	Removable Seat Attachments for Strollers
Art Unit	Not yet assigned
Examiner Name	Not yet assigned
Attorney Docket Number	34757-2709

SIGNATURE of Applicant or Patent Practitioner

Signature	/Umar R. Bakhsh/	Date (Optional)	
Name	Umar R. Bakhsh	Registration Number	67,307
Title (if Applicant is a juristic entity)	Attorney for Applicant		
Applicant Name (if Applicant is a juristic entity)	Baby Jogger, LLC		

NOTE: This form must be signed in accordance with 37 CFR 1.33. See 37 CFR 1.4(d) for signature requirements and certifications. If more than one applicant, use multiple forms.

☑ *Total of 1 forms are submitted.

This collection of information is required by 37 CFR 1.131, 1.32, and 1.33. The information is required to obtain or retain a benefit by the public which is to file (and by the USPTO to process) an application. Confidentiality is governed by 35 U.S.C. 122 and 37 CFR 1.11 and 1.14. This collection is estimated to take 3 minutes to complete, including gathering, preparing, and submitting the completed application form to the USPTO. Time will vary depending upon the individual case. Any comments on the amount of time you require to complete this form and/or suggestions for reducing this burden, should be sent to the Chief Information Officer, U.S. Patent and Trademark Office, U.S. Department of Commerce, P.O. Box 1450, Alexandria, VA 22313-1450. DO NOT SEND FEES OR COMPLETED FORMS TO THIS ADDRESS. **SEND TO: Commissioner for Patents, P.O. Box 1450, Alexandria, VA 22313-1450.**

If you need assistance in completing the form, call 1-800-PTO-9199 and select option 2.

Doc Code: PA..
Document Description: Power of Attorney

PTO/AIA/82B (07-13)
Approved for use through 11/30/2014. OMB 0651-0051
U.S. Patent and Trademark Office; U.S. DEPARTMENT OF COMMERCE
Under the Paperwork Reduction Act of 1995, no persons are required to respond to a collection of information unless it displays a valid OMB control number

POWER OF ATTORNEY BY APPLICANT

I hereby revoke all previous powers of attorney given in the application identified in either the attached transmittal letter or the boxes below.

Application Number	Filing Date

(Note: The boxes above may be left blank if information is provided on form PTO/AIA/82A.)

☑ I hereby appoint the Patent Practitioner(s) associated with the following Customer Number as my/our attorney(s) or agent(s), and to transact all business in the United States Patent and Trademark Office connected therewith for the application referenced in the attached transmittal letter (form PTO/AIA/82A) or identified above: 134811

OR

☐ I hereby appoint Practitioner(s) named in the attached list (form PTO/AIA/82C) as my/our attorney(s) or agent(s), and to transact all business in the United States Patent and Trademark Office connected therewith for the patent application referenced in the attached transmittal letter (form PTO/AIA/82A) or identified above. (Note: Complete form PTO/AIA/82C.)

Please recognize or change the correspondence address for the application identified in the attached transmittal letter or the boxes above to:

☑ The address associated with the above-mentioned Customer Number

OR

☐ The address associated with Customer Number:

OR

Firm or Individual Name					
Address					
City		State		Zip	
Country					
Telephone		Email			

I am the Applicant (if the Applicant is a juristic entity, list the Applicant name in the box):

BABY JOGGER, LLC

☐ Inventor or Joint Inventor (title not required below)

☐ Legal Representative of a Deceased or Legally Incapacitated Inventor (title not required below)

☑ Assignee or Person to Whom the Inventor is Under an Obligation to Assign (provide signer's title if applicant is a juristic entity)

☐ Person Who Otherwise Shows Sufficient Proprietary Interest (e.g., a petition under 37 CFR 1.46(b)(2) was granted in the application or is concurrently being filed with this document) (provide signer's title if applicant is a juristic entity)

SIGNATURE of Applicant for Patent

The undersigned (whose title is supplied below) is authorized to act on behalf of the applicant (e.g., where the applicant is a juristic entity).

Signature		Date (Optional)	12 Sept 2016
Name	Karen Benelli		
Title	Assistant Secretary, Chief Patent Counsel		

NOTE: Signature - This form must be signed by the applicant in accordance with 37 CFR 1.33. See 37 CFR 1.4 for signature requirements and certifications. If more than one applicant, use multiple forms.

☐ Total of forms are submitted.

This collection of information is required by 37 CFR 1.131, 1.32, and 1.33. The information is required to obtain or retain a benefit by the public which is to file (and by the USPTO to process) an application. Confidentiality is governed by 35 U.S.C. 122 and 37 CFR 1.11 and 1.14. This collection is estimated to take 3 minutes to complete, including gathering, preparing, and submitting the completed application form to the USPTO. Time will vary depending upon the individual case. Any comments on the amount of time you require to complete this form and/or suggestions for reducing this burden, should be sent to the Chief Information Officer, U.S. Patent and Trademark Office, U.S. Department of Commerce, P.O. Box 1450, Alexandria, VA 22313-1450. DO NOT SEND FEES OR COMPLETED FORMS TO THIS ADDRESS. **SEND TO: Commissioner for Patents, P.O. Box 1450, Alexandria, VA 22313-1450.**

If you need assistance in completing the form, call 1-800-PTO-9199 and select option 2.

Application Data Sheet 37 CFR 1.76

The Application Data Sheet is part of the provisional or non-provisional application for which it is being submitted. The following form contains the bibliographic data arranged in a format specified by the United States Patent and Trademark Office as outlined in 37 CFR 1.76.

Inventor Information

of inventors: 1

1. **Mark Zehfuss**

Residence Information
US Residency
Glen Allen, VA
UNITED STATES

Mailing Address
10804 Cherry Hill Drive
Glen Allen, VA 23059
UNITED STATES

Application Information

Customer number	**134811 -**
Correspondence address	---
Title of invention	**Removable Seat Attachments for Strollers**
Attorney docket number	**34757-2679CON**
Entity status	Regular Undiscounted
Application type	Nonprovisional Application under 35 USC 111(a)

Subject matter	Utility
Total number of drawing sheets	18
Suggested figure for publication	---
Filing by reference	No
Publication request	Normal eighteen-month publication

Representative Information

of representatives: 1

Representative information should be provided for all practitioners having a power of attorney in the application. Providing this information in the Application Data Sheet does not constitute a power of attorney in the application (see 37 CFR 1.32).

Customer number 134811

Domestic Benefit/National Stage Information

of benefit claims: 9

This section allows for the applicant to either claim benefit under 35 U.S.C. 119(e), 120, 121, or 365(c), 386(c), or indicate National Stage entry from a PCT application. Providing benefit claim information in the Application Data Sheet constitutes the specific reference required by 35 U.S.C. 119(e) or 120, and 37 CFR 1.78(a)(2) or CFR 1.78(a)(4), and need not otherwise be made part of the specification.

Prior app status	Pending
Application number	---
Continuity type	**Continuation of**
Prior app number	**17877323**
Filing Date	07/29/2022

Prior app status	Pending
Application number	**17877323**
Continuity type	**Continuation of**

Prior app number	**16903292**
Filing Date	06/16/2020

Prior app status	Patented
Application number	**16903292**
Continuity type	**Continuation of**
Prior app number	**15912901**
Filing Date	03/06/2018
Patent number	10730543
Issue date	08/04/2020

Prior app status	Patented
Application number	**15912901**
Continuity type	**Continuation of**
Prior app number	**15225326**
Filing Date	08/01/2016
Patent number	9944305
Issue date	04/17/2018

Prior app status	Expired
Application number	**15225326**
Continuity type	**Claims benefit of provisional**
Prior app number	**62311224**
Filing Date	03/21/2016

Prior app status	Patented
Application number	**15225326**
Continuity type	**Continuation in part of**
Prior app number	**14597420**
Filing Date	01/15/2015
Patent number	9403550
Issue date	08/02/2016

Prior app status	Patented
Application number	**14597420**

Continuity type	**Continuation of**
Prior app number	**14261558**
Filing Date	04/25/2014
Patent number	8955869
Issue date	02/17/2015

Prior app status	Abandoned
Application number	**14261558**
Continuity type	**Continuation of**
Prior app number	**12631375**
Filing Date	12/04/2009

Prior app status	Expired
Application number	**12631375**
Continuity type	**Claims benefit of provisional**
Prior app number	**61119920**
Filing Date	12/04/2008

Foreign Priority Information

of foreign priority claims: 0

This section allows for the applicant to claim benefit of foreign priority and to identify any prior foreign application for which priority is not claimed. Providing this information in the Application Data Sheet constitutes the claim for priority as required by 35 U.S.C. 119 (b) and 37 CFR 1.55. When priority is claimed to a foreign application that is eligible for retrieval under the priority document exchange program (PDX) the information will be used by the Office to automatically attempt retrieval pursuant to 37 CFR 1.55(i)(1) and (2). Under the PDX program, applicant bears the ultimate responsibility for ensuring that a copy of the foreign application is received by the Office from the participating foreign intellectual property office, or a certified copy of the foreign priority application is filed, within the time period specified in 37 CFR 1.55(g)(1).

Data was not provided for this section.

Statement under 37 CFR 1.55 or 1.78 for AIA (First Inventor to File) Transition Applications

Checking this box will cause the application to be examined under the first inventor to file provisions of the AIA.

☐ This application (1) claims priority to or the benefit of an application filed before March 16, 2013 and (2) also contains, or contained at any time, a claim to a claimed invention that has an effective filing date on or after March 16, 2013. NOTE: By providing this statement under 37 CFR 1.55 or 1.78, this application, with a filing date on or after March 2016, 2013, will be examined under the first inventor to file provisions of the AIA.

Authorization or Opt-Out of Authorization to Permit Access

When this Application Data Sheet is properly signed and filed with the application, applicant has provided written authority to permit a participating foreign intellectual property (IP) office access to the instant application-as-filed (see paragraph A in subsection 1 below) and the European Patent Office (EPO) access to any search results from the instant application (see paragraph B in subsection 1 below).

Should applicant choose not to provide an authorization identified in subsection 1 below, applicant **must opt-out** of the authorization by checking the corresponding box A or B or both in subsection 2 below.

NOTE:
This section of the Application Data Sheet is **ONLY** reviewed and processed with the **INITIAL** filing of an application. After the initial filing of an application, an Application Data Sheet cannot be used to provide or rescind authorization for access by a foreign IP office(s). Instead, Form PTO/SB/39 or PTO/SB/69 must be used as appropriate.

1. Authorization to Permit Access by a Foreign Intellectual Property Office(s)

A. **Priority Document Exchange (PDX)**
Unless box A in subsection 2 (opt-out of authorization) is checked, the undersigned hereby **grants the USPTO authority** to provide the European Patent Office (EPO), the Japan Patent Office (JPO), the Korean Intellectual Property Office (KIPO), the State Intellectual Property Office of the People's Republic of China (SIPO), the World Intellectual Property Organization (WIPO), and any other foreign intellectual property office participating with the USPTO in a bilateral or multilateral priority document exchange agreement in which a foreign application claiming priority to the instant patent application is filed, access to: (1) the instant patent application-as-filed and its related bibliographic data, (2) any foreign or domestic application to which priority or benefit is claimed by the instant application and its related bibliographic data, and (3) the date of filing of this Authorization. See 37 CFR 1.14(h) (1).

B. **Search Results from U.S. Application to EPO**
Unless box B in subsection 2 (opt-out of authorization) is checked, the undersigned hereby **grants the USPTO authority** to provide the EPO access to the bibliographic data and search results from the instant patent application when a European patent application claiming priority to the instant patent application is filed. See 37 CFR 1.14(h)(2).

The applicant is reminded that the EPO's Rule 141(1) EPC (European Patent Convention) requires applicants to submit a copy of search results from the instant application without delay in a European patent application that claims priority to the instant application.

2. Opt-Out of Authorizations to Permit Access by a Foreign Intellectual Property Office(s)

☐ A. Applicant **DOES NOT** authorize the USPTO to permit a participating foreign IP office access to the instant application-as-filed. If this box is checked, the USPTO will not be providing a participating foreign IP office with any documents and information identified in subsection 1A above.

B. Applicant **DOES NOT** authorize the USPTO to transmit to the EPO any search results from the instant patent

application. If this box is checked, the USPTO will not be providing the EPO with the search results from the instant application.

NOTE:
Once the application has published or is otherwise publicly available, the USPTO may provide access to the application in accordance with 37 CFR 1.14.

Applicant Information

of applicants: 1

The information to be provided in this section is the name and address of the legal representative who is the applicant under 37 CFR 1.43; or the name and address of the assignee, person to whom the inventor is under an obligation to assign the invention, or person who otherwise shows sufficient proprietary interest in the matter who is the applicant under 37 CFR 1.46.

1. **Baby Jogger, LLC**
   8575 Magellan Parkway, Suite 1000
   Richmond, VA 23227
   UNITED STATES

   Phone: ---
   Fax: ---
   Email: ---

Applicant	Organization
Applicant type	Assignee

Assignee Information including Non-Applicant Assignee Information

of assignees: 1

An assignee-applicant identified in the "Applicant" section will appear on the patent application as an applicant.

Providing assignment information in this section does not substitute for compliance with any requirement of part 3 of Title 37 of CFR to have an assignment recorded by the Office.

Baby Jogger, LLC
8575 Magellan Parkway, Suite 1000
Richmond, VA 23227
UNITED STATES

Organization

Signature

NOTE:

This Application Data Sheet must be signed in accordance with 37 CFR 1.33(b). **However, if this Application Data Sheet is submitted with the INITIAL filing of the application and either box A or B is not checked in subsection 2 of the "Authorization or Opt-Out of Authorization to Permit Access" section, then this form must also be signed in accordance with 37 CFR 1.14(c)**

This Application Data Sheet **must** be signed by a patent practitioner if one or more of the applicants is a **juristic entity** (e.g., corporation or association). If the applicant is two or more joint inventors, this form must be signed by a patent practitioner, **all** joint inventors who are the applicant, or one or more joint inventor-applicants who have been given power of attorney (e.g., see USPTO Form PTO/AIA/81) on behalf of **all** joint inventor-applicants.

See CFR 1.4(d) for the manner of making signatures and certifications.

Signature	First name	Last name	Registration #	Date
/Umar Bakhsh/	Umar	Bakhsh	67307	10/31/2022

REMOVABLE SEAT ATTACHMENTS FOR STROLLERS

CROSS-REFERENCE TO RELATED APPLICATIONS

This application is a continuation of U.S. Patent Application No. 17/877,323, filed July 29, 2022, which is a continuation of U.S. Patent Application No. 16/903,292, filed June 16, 2020, which is a continuation of U.S. Patent Application No. 15/912,901, filed March 6, 2018 and issued as U.S. Patent No. 10,730,543, which is a continuation of U.S. Patent Application No. 15/225,326, filed August 1, 2016 and issued as U.S. Patent No. 9,944,305, which both (i) claims the benefit of U.S. Application No. 62/311,224, filed March 21, 2016, and (ii) is also a continuation-in-part of U.S. Patent Application No. 14/597,420, filed January 15, 2015 and issued as U.S. Patent No. 9,403,550, which is a continuation of U.S. Patent Application No. 14/261,558, filed on April 25, 2014 and issued as U.S. Patent No. 8,955,869, which is a continuation of U.S. Patent Application No. 12/631,375, filed December 4, 2009, which claims the benefit of U.S. Application No. 61/119,920, filed December 4, 2008, the contents of which are all incorporated herein by reference.

TECHNICAL FIELD

Embodiments disclosed herein are generally related to children's stroller systems and more particularly to apparatuses and methods for a removable seat attachment for a stroller that is capable of supporting a seat including, but not limited to, a stroller seat, a baby seat, a bassinet, a pram, a car seat, or a baby carrier.

BACKGROUND

Parents or guardians with multiple young children may have difficulty transporting their children from place to place. Children are slow, easily distracted and, therefore, may lag behind. In response, many parents and/or guardians have purchased double seat strollers allowing the parent or guardian to push two children simultaneously and thus allow them to more efficiently run errands, take walks, or jog. As such, a double seat stroller allows the parent or guardian with multiple young children more freedom than they would have with only a single seat stroller.

However, permanently fixed double seat strollers also have certain disadvantages. Double seat strollers are substantially larger (wider and/or longer) than single seat strollers and are, therefore, more difficult to maneuver through doorways and down aisles in stores. While, the

benefits of being able to accommodate two children at one time in a double seat stroller typically offset these disadvantages, when the parent or guardian has only one child with them, the benefits of the double seat stroller are not realized but the disadvantages still exist.

Stroller manufacturers have attempted to solve this problem by providing an adjustable stroller that can be modified from having a single seat to having two seats by providing attachments that provide a second seat for the second child that hangs under and slightly behind the seat of the single seat stroller. In other embodiments, the second seat can be attached to a seat attachment placed further forward in the stroller. The current attachment mechanisms can suffer from several drawbacks. These drawbacks include being permanently affixed to the stroller frame and taking up unnecessary space or creating a safety hazard for children not in the stroller when the second seat is not attached to the stroller. In addition, the covers for the seat attachments, for covering a portion of the seat attachment mechanism when not in use, are detachable and can be easily lost when the seat attachment is in use.

BRIEF DESCRIPTION OF THE EXAMPLE DRAWINGS

For a more complete understanding of the present disclosure and certain features thereof, reference is now made to the following description, in conjunction with the accompanying figures briefly described as follows:

Figure 1 presents a side elevation view of a single stroller apparatus according to one example embodiment of the disclosure.

Figure 2 presents a partial side elevation view of a seat attachment to convert a single stroller into a double stroller according to one example embodiment of the disclosure.

Figure 3 presents a side elevation view of a combination of the single stroller of Figure 1 attached to the seat attachment of Figure 2 according to one example embodiment of the disclosure.

Figure 4 presents a perspective view of a seat attachment capable of supporting a car seat on an attachment of Figure 2 according to one example embodiment of the disclosure.

Figure 5 presents a side elevation view of a combination of the single stroller of Figure 1 attached to an attachment in the form of a tricycle-like riding device according to one example embodiment of the disclosure.

Figure 6A presents a view of an accessory attachment for supporting an accessory on a

stroller, while Figure 6B presents a view of a bag or purse for attaching to the accessory attachment of Figure 6A according to one example embodiment of the disclosure.

Figure 7 presents a perspective view of an attachment for supporting a seat comprising one wheel according to one example embodiment of the disclosure.

Figures 8A-H present multiple views of a stroller apparatus capable of being converted from a single seat stroller to a double seat stroller through the use of removable seat attachment adapters according to one example embodiment of the disclosure.

Figure 9 presents a perspective view of one version of a stroller with left and right attachment frame members for attaching a second seat according to one example embodiment of the disclosure.

Figure 10 presents a front elevation view of an attachment frame member according to one example embodiment of the disclosure.

Figure 11 is a partial perspective view of the stroller showing the seat attachment housing according to one example embodiment of the disclosure.

Figure 12 is a partial perspective view of the seat attachment housing according to one example embodiment of the disclosure.

Figures 13A-C are partial perspective views of the removable seat attachment adapter removably coupled to the seat attachment housing according to one example embodiment of the disclosure.

Figures 14A-C are partial perspective views of an alternative embodiment of the seat attachment housing according to another example embodiment of the disclosure.

DETAILED DESCRIPTION OF THE EXAMPLE EMBODIMENTS

Example embodiments of the invention now will be described more fully hereinafter with reference to the accompanying drawings, in which example embodiments are shown. The concept disclosed herein may, however, be embodied in many different forms and should not be construed as limited to the exemplary embodiments set forth herein; rather, these embodiments are provided so that this disclosure will be thorough and complete, and will fully convey the scope of the invention to those skilled in the art. Like numbers refer to like, but not necessarily the same, elements throughout.

The example embodiments described herein and shown in the figures is described with reference to an infant or child's stroller that can be configured to adjust from a single seat stroller to a multi-seat stroller. While the example embodiments will generally be described with reference to adding or removing seats from the stroller, the reference to seats is for example purposes only, as the seat or portion that can be added or removed from the stroller can include, but is not limited to, a stroller seat, a baby seat, a bassinet, a pram, a car seat, or a baby carrier. Each of the stroller seat, baby seat, bassinet, pram, car seat, and/or baby carrier should individually be read as an alternative embodiment to the removable/added infant or child's stroller seat described below.

Certain dimensions and features of the example adjustable stroller are described herein using the term "approximately." As used herein, the term "approximately" indicates that each of the described dimensions is not a strict boundary or parameter and does not exclude functionally similar variations therefrom. Unless context or the description indicates otherwise, the use of the term "approximately" in connection with a numerical parameter indicates that the numerical parameter includes variations that, using mathematical and industrial principles accepted in the art (*e.g.*, rounding, measurement or other systematic errors, manufacturing tolerances, etc.), would not vary the least significant digit.

In addition, certain relationships between dimensions of the adjustable stroller and between features of the adjustable stroller are described herein using the term "substantially." As used herein, the terms "substantially" and "substantially equal" indicates that the equal relationship is not a strict relationship and does not exclude functionally similar variations therefrom. Unless context or the description indicates otherwise, the use of the term "substantially" or "substantially equal" in connection with two or more described dimensions indicates that the equal relationship between the dimensions includes variations that, using mathematical and industrial principles accepted in the art (*e.g.*, rounding, measurement or other systematic errors, manufacturing tolerances, etc.), would not vary the least significant digit of the dimensions. As used herein, the term "substantially constant" indicates that the constant relationship is not a strict relationship and does not exclude functionally similar variations therefrom. As used herein, the term "substantially parallel" indicates that the parallel relationship is not a strict relationship and does not exclude functionally similar variations therefrom.

As discussed above, parents or guardians may find themselves in a situation wherein it is more convenient to transport two children in a stroller, but at the same time find it inconvenient to

have both a single stroller and double stroller. Embodiments of the seat attachment solve this problem. In one aspect, an embodiment of the seat attachment for a stroller is capable of converting a single stroller into a double stroller. The seat attachment may support a seat such as, but not limited to, a stroller seat, a baby seat, a bassinet, a pram, a baby carrier, or a car seat, for example. Therefore, the parent or guardian does not require both a single stroller and a double stroller. A stroller configured to receive a seat attachment for converting a single stroller into a double stroller provides convenience to the user. The single stroller may be connected to a double stroller by attaching the seat attachment to the single stroller and then attaching the second seat. As such, an embodiment of the seat attachment for converting a single stroller into a double stroller can include at least one connector portion capable of connecting to a stroller frame and a seat support element capable of supporting a seat.

Figure 1 presents a side elevation view of a single stroller apparatus 10 according to one example embodiment of the disclosure. Referring to Figure 1, it shows only one side of the single stroller 10, however, most components include a complementary component on the other side of the single stroller but are not shown in Figure 1. The example single stroller 10 includes a frame 12 that supports a seat 13. The frame 12 may optionally include at least one, and in certain embodiments preferably two, folding mechanisms 16 that allow the stroller 10 to be folded to a more convenient size for storing or transporting the stroller 10.

In the example embodiment of Figure 1, the seat 13 is shown as a typical stroller seat. However, other types of seats may be used in a single stroller. The seat 13 may be permanently affixed to the frame 12 or releasably connected, such that it is capable of being removed and substituted with a different seat. As used herein, "releasably connected" or "releasably attached" means the connection is not a permanent connection and that the connection is capable of being connected and disconnected by the user of the stroller 10 without requiring special tools or special skills. Releasable connections include, but are not limited to, buttons, snaps, friction fittings, interference fits, threaded connections, locking tabs, keyed connections, other fasteners, or the like. The frame 12 is supported on a pair of back wheels 14 and a pair of front wheels 15. In this example embodiment, the back wheels 14 are fixed and do not swivel or pivot on the frame 12 while the pair of front wheels 15 pivot to make turning the single stroller 10 easier and more convenient. Though, pivoting wheels may be preferred in certain strollers, strollers with fixed non-pivoting wheels are also common and considered as an option as part of this disclosure. In

certain example embodiments, the single stroller 10 does not require pairs of front 15 or rear 14 wheels and either the front pair of wheels 15 or the back pair of wheels 14 may be substituted with a single wheel. In certain example embodiments, the single stroller 10, including umbrella strollers, jogging strollers, all-terrain strollers, as well as other strollers may only include one front wheel 15.

The example single stroller 10 may also include one or more seat attachments that are capable of converting any style of single stroller to a double stroller, including strollers with one or two front wheels. In one example embodiment, the stroller 10 can include two attachment portions 17. In one example, the attachment portions 17 can be positioned on or near the front of the stroller 10 to allow the seat attachment and the seat to be connected to the front portion of the stroller 10. The attachment portions 17 can allow a seat attachment such as the seat attachment for converting the single stroller 10 to a double stroller, as shown in Figure 3, to be connected to the stroller. While only one seat attachment is shown in Figure 3, the stroller 10 could typically include two seat attachments as shown in Figure 3 or one seat attachment that can include two seat support elements. In certain example embodiments, the stroller 10 can include a left side and a right side attachment portion 17. The seat attachment for the stroller 10 can further include corresponding connector portions capable of connecting to the stroller frame at the attachment portions 17. Though the seat attachment for the stroller is described in relation to a single stroller, the attachment may similarly be attached to a double stroller. As such, example embodiments of the seat attachment may therefore be used to convert a double stroller into a triple stroller, if desired.

Figure 2 presents a partial side elevation view of a seat attachment to convert a single stroller into a double stroller according to one example embodiment of the disclosure. Now referring to Figures 1 and 2, the example seat attachment 20 is shown in an unlocked and folded configuration. The seat attachment 20 includes a one or more connector portions 21 capable of connecting to the attachment frame members 24, two seat attachment elements 22 capable of supporting a seat; and a wheel 23. In this example embodiment, the connector portions 21 are connected to the rear of the seat attachment 20 allowing the seat attachment 20 to be connected to the front of a stroller, such as stroller 10 shown in Figure 1. In other example embodiments, the seat attachment 20 may include more than one wheel 23, one connector portion 21, one seat support element, or combinations of these elements. In example embodiments of the stroller with one

wheel, the attachment frame member may be on the forks of the front wheel, for example.

The seat attachment 20 can include a wheel support frame 26 connecting the wheel 23 to the attachment frame member 24 of the attachment 20. Each attachment frame member 24 has a first and a second end. The first end is capable of connecting to a stroller frame and the second end can be connected to the seat support element 22. As shown in Figure 2, the seat attachment 20 can include a wheel support frame 26 that is pivotally connected to two attachment frame members 24. The wheel support frame 26 or the attachment frame 24 may span the width of the stroller between the two attachment portions 17. The pivotal connection 27 allows the seat attachment 20 to be folded and conveniently stored or transported but is not necessary for all example embodiments of the disclosure. The pivotal connection 27 can be optional and provide more convenience, however, other example embodiments of the seat attachment 20 can include a releasably connected wheel support frame or a rigid frame that may be incorporated to produce a seat attachment that has greater strength for use in situations where a stronger seat attachment may be desired, such as with all-terrain or jogging strollers, for example. The wheel support frame 26 may be connected at any point on the attachment frame 24. In certain example embodiments the wheel support frame 26 is connected to the attachment frame 24 near the connector portion 21 or near the middle of the attachment frame 24.

In certain example embodiments, the seat attachment without a wheel may include connector portion 21 or attachment frame member 24, and seat attachment member 22, for example. In this example embodiment, there may be no need for the pivotal connection 27, wheel support frame 26, sliding connector 25, or wheel 23.

The seat attachment 20 can also include a folding mechanism that includes a sliding connector 25 connected to a first end of a strut 28. A second end of the strut 28 can be pivotally connected to wheel support frame 26. In such an embodiment, the sliding connector 25 may be moved between a first position and a second position on the attachment frame member 24. As the sliding connector 25 is moved, the strut 28 pushes the wheel support frame 26 from an in-use position to a storage position. The storage position is more compact as shown in Figure 2. In addition, certain example embodiments of the seat attachment 20 can also include a locking mechanism 29 that is capable of securing the seat attachment 20 to a stroller, such as stroller 10 shown in Figure 1. The locking mechanism 29 can be engaged by moving the sliding connector 25 to the in-use position, in which the wheel support frame 26 and wheel 23 are extended. In

certain example embodiments, the wheel 23 of the seat attachment 20 is pivotally connected to the connector portion 21 and when the wheel 23 is in the in-use position the releasable connection is locked and when the wheel 23 is moved to the storage position, the releasable connection is unlocked allowing the seat attachment 20 to be removed from stroller 10. The seat attachment 20 may be stored and the stroller 10 may be conveniently used as a single stroller. As designed, the seat attachment 20 may be reconnected to the stroller 10 for use as a double stroller when needed. The seat attachment portion may be secured into position on the stroller frame and a locking mechanism may be used with an embodiment with or without the wheel. Either the seat attachment or the stroller frame can include a locking mechanism for securing the stroller and seat attachment together. The locking mechanism may be any mechanism capable of securing the components together during use and may be a friction locking device, threaded connection, peg in a hole, or an interference locking device such as a pin in a hole, for example. As shown in the example embodiment of Figure 2, the locking mechanism 29 pivots with wheel support frame 26 as the seat attachment 20 is moved from an unfolded position to a folded position. The locking mechanism 29 may slide into a hole or notch in the attachment frame member 24 of the stroller 10 shown in Figure 1. As such, the seat attachment 20 may be attached to the stroller 10 by positioning the attachment (connector) portion 21 of the seat attachment 20 in the slot 18 of the attachment portion 17 of the stroller 10. The sliding connector 25 may be moved to the in-use position, the wheel support frame is moved, and the locking mechanism 29 is positioned into the locking slot 19 of the stroller 10.

In certain example embodiments, the connector portion 21 of the seat attachment 20 has a cylindrical or substantially cylindrical shape. The connector portion 21 may be inserted into a cylindrical or substantially cylindrical slot 18 of the attachment portion 17 of the stroller 10 of Figure 1 to secure the seat attachment and convert the single stroller into a double stroller, as shown in Figure 3. In other example embodiments, the seat attachment 20 may include any type of connector portion having any geometric or non-geometric shape. The connector portion 21 may be of a solid or tubular construction and may be any cross-sectional shape including, but not limited to, circular, polygonal, square, rectangular, and triangular, for example. Other attachment mechanisms may be utilized to connect the seat attachment to the stroller 10 such as, but not limited to, a U-shaped bracket, a U-bolt, a pipe clamp, O-shaped bracket, screw, bolt, or other clamping or attachment means. The attachment frame member 24 of the stroller 10 can have a

complimentary and/or cooperating shape that allows the connector portion 21 to be secured to the attachment portion of the stroller.

Figure 3 presents a side elevation view of a combination of the single stroller 10 of Figure 1 attached to the seat attachment 20 of Figure 2 according to one example embodiment of the disclosure. Referring to Figure 3, the seat attachment 20 removably coupled to the single stroller 10 to form a double stroller. The double stroller configuration is shown with two stroller seats 13 in an inline configuration, though the other configurations, such as a stroller seat and a bassinet or a pram may also be supported on the double stroller. Further, the seat support element 22 of the seat attachment 20 may be capable of supporting the front stroller seat 13 in either a forward-facing or backward-facing position.

The example embodiment of the stroller 10 in Figure 3 is shown only as an example of one type of stroller, the frame of the stroller 10 may be any of many possible configurations. Example embodiments of the seat attachment accessory may be configured to be used on any such configuration of a stroller. For example, in another example embodiment, the baby stroller may not include two front wheels, may not include a folding mechanism or may include only one folding mechanism. In addition, the baby stroller may include additional features not included in baby stroller 10. For example, the stroller may optionally include fixed front wheels, an entirely different frame configuration, or a storage basket underneath the seat of the stroller.

The seat support member may be any configuration capable of supporting the seat on the seat attachment 20. Figure 4 presents another example embodiment of a seat support member 40 for use with a car seat or other baby seat according to one example embodiment of the disclosure. Now referring to Figure 4, the seat support member 40 can include a main support 41. The main support 41 can include a cradle for supporting a central portion of the seat. Another portion of the seat may rest against support bar 42. In this example, the support bar 42 may be adjusted to accommodate seats of different shapes and sizes. The support bar 42 may be slid within the aperture 43 and locked in place when the support bar 42 is in the desired position to support a certain seat. The seat is, therefore, supported on two main supports 41 and the support bar 42. The seat may be further secured in the seat attachment member 40 by wrapping belts 44 and 45 around the seat and locking the belts in this position with a buckle or other securing means.

Figure 5 presents a side elevation view of a combination 50 of the single stroller 10 of Figure 1 attached to an attachment in the form of a tricycle-like riding device according to one

example embodiment of the disclosure. Referring to Figure 5, the combination 50 includes the stroller 10 and the seat attachment 51. In one example, the seat attachment 51 is a tricycle-like attachment that includes a connector portion 52, a frame 53 with a seat support element 56, a seat 57, and a wheel 55. The tricycle-like attachment may be attached to stroller 10 to allow one child to be pushed in the stroller 10 and one child to ride the seat attachment 51. The seat attachment 51 may be other shapes also such as cars, trucks, or animal shapes, for example.

In certain example embodiments, the stroller 10 can include an additional accessory attachment portion 58. The accessory attachment portion 58 attaches to a frame member of the stroller 10. An embodiment of the accessory attachment portion 58 is shown on Figure 6A. This embodiment is particularly useful for attaching a bag or purse 64, as shown in Figure 6B, to the stroller 10.

When using a stroller, parents or guardians typically carry other items, such as purses, grocery bags, cell phones, diapers, cleaning wipes, or other personal or baby related items. Some strollers have bottom storage baskets for placing such items. However, these storage baskets can be inconvenient to access or some light weight strollers do not include such storage baskets. Therefore, users of the stroller may hang purses or shopping bags on the handle of the stroller. This is convenient in that the bag is easy to access, but the weight of the bag on the handle may cause the stroller to be unbalanced and increase the tendency of the stroller to topple backwards. A heavy bag hung from the handle of a stroller may cause the stroller to tip backwards even with a child in the seat. The problem is worse if the stroller is facing uphill, on uneven terrain, being pushed up a curb, or occupied by a small child. The accessory attachment 58 may be attached to the frame of the stroller 10 by any of the clamping or attachment methods described above, for example. Preferably, the accessory attachment 58 is attached near the center of gravity of the stroller 10 to avoid creating an unbalanced condition of the stroller 10. As shown in Figure 6A, the accessory attachment 58 is connected to stroller frame 12 of stroller 10 near the folding mechanism. Certain example embodiments of the accessory attachment 58 include a first end 61 for connecting to a stroller frame and a distal second end 62 for releasably connecting to the accessory 64. The first end 61 can include an aperture 64 that may be connected to frame 12 of the stroller 10. In certain example embodiments, the aperture 64 is on an angle, such that when the axis of the accessory attachment portion 58 is horizontal or substantially horizontal. The accessory attachment 58 may, optionally, include a rib 63 for securing the accessory 64 to the

accessory attachment 58. The rib 63 may be replaced with any other locking element or securing means including a friction fitting, a screwed fitting, or interference fitting, for example.

One example of an accessory 64 for attaching to an accessory attachment 58 is shown in Figure 6B. The accessory 64 in this example is a bag or purse. The accessory 64 can include an attachment portion 65 that is capable of being secured to the attachment portion 62 on the accessory attachment 58. The accessory 64 may be secured on stroller 10 by securing attachment portion 65 to attachment portion 62. The attachment portion 65 can slide over the cylindrical attachment portion 62 of accessory attachment 58. The attachment portion 65 may include an interior annular recess that receives the rib 63 securing the accessory 58 to the stroller 10. The accessory 64 is thus removably coupled to the stroller 10 in a center portion of the stroller as viewed from the side. Therefore, the bag or purse 64 is conveniently secured to stroller 10 while not contributing to an unbalanced condition of the stroller 10.

Figure 7 presents a perspective view of an attachment 70 for supporting a seat comprising one wheel 73 according to one example embodiment of the disclosure. Referring now to Figure 7, the example seat attachment 70 can include two seat attachment members 71, two connector portions 72, and a wheel 73. The two seat attachment members 71 and the wheel 73 can be disposed or otherwise positioned in a triangular relationship. In certain example embodiments, the wheel 73 provides additional stability to a stroller 10 connected to the seat attachment 70 if a heavier child is placed in a seat attached to the seat attachment members 71.

Figures 8A-H present multiple views of a stroller apparatus capable of being converted from a single seat stroller to a double seat stroller through the use of removable seat attachment adapters, according to another example embodiment of the disclosure. Referring now to Figures 8A-H, the example stroller apparatus 80 can include a stroller frame 81 capable of supporting one or more stroller seats 85, 86. In one example embodiment, the stroller frame 81 can be made of one or more pieces fixedly coupled and/or removably coupled to one another. The stroller frame 81 can include portions that are hollow tubing and other portions that are solid core tubing and can be made from metal, plastic, or other materials known in the art.

In one example embodiment, the stroller frame 81 can include a pair of front wheel support frames 81a (only the left front wheel support frame is shown), a pair of back wheel support frames 81b (only the left back wheel support frame is shown), a pair of upper tube support frames 81c (only the left upper tube support frame is shown), a handle portion 81d having a first end coupled

to the left upper tube support frame 81c and a distal second end coupled to the right upper tube support frame 81c, and foot rest support frame 81f having a first end coupled to the left front wheel support frame 81a (either directly or via the first seat attachment housing 1105 discussed below in Figure 11) and a distal second end coupled to the right front wheel support frame 81a (either directly of via the second seat attachment housing 1110 discussed below in Figure 11). In certain example embodiments, each front wheel support frame 81a can be fixedly coupled or rotatably coupled to its corresponding upper tube support frame 81c. Further, in certain example embodiments, the left upper tube support frame 81c, handle 81d, and right upper tube support frame 81c can be made from a single unitary piece of material, such as a single piece of bent, hollow-core metal or plastic tubing. Alternatively, each of the left upper tube support frame 81c, handle 81d, and right upper tube support frame 81c can be separate pieces of the same or different material that are coupled to one another.

The exemplary stroller frame 81 can also include a pair of folding mechanisms 81e (only the left folding mechanism is shown). In one example, each folding mechanism 81e can be coupled, either directly or indirectly to the corresponding front wheel support frame 81a, back wheel support frame 81b, and upper tube support frame 81c on the corresponding side (left and right) of the stroller 80. In certain example embodiments, one or more of the corresponding front wheel support frame 81a, back wheel support frame 81b, and upper tube support frame 81c are rotatably coupled and rotatably adjustable about one or more axes defined through the folding mechanism 81e. As such, in certain example embodiments, the folding mechanism 81e allows the stroller 80 to be folded into a more compact size for storing or transportation. Figure 8B shows the stroller 10 in a folded configuration.

The example stroller 80 can also include at least one front wheel 82 coupled directly or indirectly (*e.g.*, via one of the seat attachment housings 1105, 1110, as shown in Figure 11) to the stroller frame 81. Figure 8B presents an example embodiment wherein the stroller 80 can include two front wheels 82, one front wheel 82 being coupled to the stroller 80 adjacent the left front wheel support frame 81a and the second front wheel 82 being coupled to the stroller 80 adjacent the right front wheel support frame 81a. The example stroller 80 can also include at least one rear wheel 83 coupled directly or indirectly to the stroller frame 81 (*e.g.*, a corresponding back wheel support frame 81b). Figure 8B presents an example embodiment wherein the stroller 80 can

include two back wheels 83, one back wheel 83 being coupled to the left back wheel support frame 81b and the second back wheel 83 coupled to the right back wheel support frame 81b.

The stroller 80 can also include a first stroller seat 86 either fixedly or removably coupled to the stroller frame 81. For example, the first stroller seat 86 can include a left connector on the left side of the first stroller seat 86 and a right connector on the right side of the first stroller seat 86 to removably couple and decouple the first stroller seat from the stroller frame 81. In one example, each of the left connector and right connector can be cavities in the first stroller seat 86 and can be configured to receive at least a portion of a corresponding seat attachment adapter (*e.g.*, a bayonet connector) therein. In another example embodiment, the left connector and the right connector can each be tabs or slots that are configured to be coupled to corresponding slots or tabs along the stroller frame 81.

The stroller 80 can also include a removable seat attachment adapter 84 that is removably coupled to the frame 81 such that the seat attachment adapter 84 can be decoupled from the frame 81 and stored when a second stroller seat is not being used with the stroller 80. In one example embodiment, each removable seat attachment adapters can be coupled to the frame by coupling the adapter 84 into a seat attachment housing disposed along the frame 81. In one example, the seat attachment housing (such as that described in Figures 11-14C below) can be integrally formed with all or a portion of the stroller frame (*e.g.*, integrally formed with front wheel support frame 81a). Alternatively, the seat attachment housing can be a separate apparatus that is coupled to the frame 81 or incorporated into the frame 81 by coupling multiple pieces of the frame 81 together. The frame 81 and each seat attachment housing can be made from the same or different materials, including, metals and plastics.

Though it cannot be seen in the side view of Figure 8A, a typical embodiment of the stroller 80 will include at least two removable seat attachment adapters 84 (at least one along each left and right side of the stroller 80 along the stroller frame 81). For example, at least one removable seat attachment adapter can support each lateral side of the second stroller seat 85. In certain example embodiments, each of the removable seat attachment adapters 84 may be made up of one piece or multiple parts. The removable seat attachment adapters 84 may be of any design capable of securely supporting a seat on the stroller. In one example, the removable seat attachment adapter 84 is configured to have a first end that is removably coupled to the frame 81 and/or seat attachment housing and a distal second end that is configured to be removably coupled to a second stroller

seat 85. The removable seat attachment adapter 84 is designed to be capable of supporting the second stroller seat 85 in front of the first stroller seat 86. The stroller 80 may also include a storage basket 87.

In certain examples, each of the removable seat attachment adapters 84 removably couples to the second stroller seat 85 at a vertical height that is substantially below the vertical height that the first stroller seat 86 attaches to the stroller frame 81, thereby positioning the second stroller seat 85 at a vertical position that is substantially below the vertical position of the first stroller seat 86 when both the first stroller seat 86 and the second stroller seat 85 are coupled to the stroller 80. The difference in vertical positioning of the second stroller seat 85 as compared to the first stroller seat 86 provides improved access to the first stroller seat 86 from the front of the stroller 10 when both stroller seats 85, 86 are coupled to the stroller 80. Further, in certain example embodiments, the first stroller seat 85 can be positioned substantially over the front wheels 82 so that the stroller 80 remains stable. For example, the second stroller seat 85 can be located substantially over the front wheels 82 and the first stroller seat 86 can be located substantially over the rear wheels 83. In addition, the seats 85, 86 can be positioned such that the center of gravity of the stroller 80 is between the front 82 and rear 83 wheels.

In certain example embodiments, the removable seat attachment adapter 84 is capable of supporting a second stroller seat 85 such that a child in the second stroller seat 85 is substantially above the frame 81 of the stroller 80 that is substantially adjacent to the connection point of the second stroller seat 85. This positioning of the second stroller seat 85 with respect to the frame 81 provides easier access to the second stroller seat 85, does not block access to the storage basket 87, allows more versatile configurations of the seats 85, 86, allows more variety of seats 85, 86 to be attached to the frame 81, and allows the parent or guardian to more easily monitor and see the child in each stroller seat 85, 86.

The example stroller of Figure 8A can also include the first stroller seat 86. In certain example embodiments, the first stroller seat 86 can be located generally closer to the handle portion 81d than to the front wheels 82. The first stroller seat 86 may be fixedly coupled or removably coupled to the frame 81. In certain example embodiments wherein the first stroller seat 86 is removably coupled to frame 81, the first stroller seat 86 may be adjustable from a forward-facing configuration to a rearward-facing configuration and vice-versa, as shown, for example, in Figures 8B-8C. In addition, the second stroller seat 85, when coupled to the corresponding removable seat

attachment adapters 84, can be adjustable from a forward-facing configuration to a rearward-facing configuration and vice-versa.

Figures 8C-8H present additional examples of combinations for a variety of types of stroller seats that can be removably coupled to the stroller 80. For example, in Figure 8D, the second stroller seat 85 can be replaced by an infant carrier 93 that can be removably coupled to each of the at least two removable seat attachment adapters 84 and the first stroller seat 86 can be coupled to the stroller in a forward-facing position. In another example, as shown in Figure 8E, the first stroller seat 86 can be replaced by a child carrier 91 that may be coupled to the frame 81 and positioned in the first seat position and the second stroller seat 85 can be coupled to the stroller 80 by way of the at least two removable seat attachment adapters 84 in a rearward-facing position. In yet another example, as shown in Figure 8F, the child carrier 91, of Figure 8E, can be replaced with a pram 92 that is removably coupled to the stroller 80 in the first seat position. In still another example configuration, as shown in Figure 8G, two child carriers 91 may be removably coupled to the stroller frame 81. For example, the front child carrier can be coupled to the stroller by way of each of the at least two removable seat attachment adapters 84. In another example configuration, one of the child carriers 91 may be replaced with a pram or bassinet 92, as shown in Figure 8H.

In certain example embodiments, the stroller 80 may also include a second set of removable seat attachment adapters 89 removably coupled to the frame 81 (or another pair of seat attachment housings substantially similar to those 1105, 1110 described below) along the upper tube support frame 81c. The second set of removable seat attachment adapters 89 may be substantially the same as or exactly the same as the removable seat attachment adapters 84 described herein and may be coupled to the frame 81 (or corresponding seat attachment housings) in substantially the same manner as the removable seat attachment adapters 84, as discussed in more detail below. The second set of removable seat attachment adapters 89 can include at least two adapters (at least one along each left and right side of the stroller 80) for removably coupling and decoupling the first stroller seat 86 or any other form of seat described herein to the stroller frame 81 or corresponding seat attachment housing.

In one example embodiment, as shown in Figures 9-10, the stroller 80 can include one or more, and preferably two, seat support elements 84. The seat support element 84 is connected to and can be removably coupled to the stroller 80 front wheel support frame 81a. In certain example

embodiments, the seat support element 84 is adjacent to the front wheel support portion 81a of frame 81. Alternatively, the seat support element 84 is simply forward of and positioned at a vertical level lower than the attachment point for the first stroller seat 86 (Figure 8A) on the stroller 80. The seat support element 84 is capable of supporting a second stroller seat 85 in front of the stroller seat 86 (see Figure 8A). This provides convenience and versatility to a user of the stroller 80. Seat support element 84 may be fixedly attached or removably attached to front wheel support portion 81a. In certain example embodiments, the front seat 85 may be positioned substantially over the front wheels 15 so the stroller 80 remains stable. Preferably, the seats 85, 86 should be positioned such that the center of gravity of the stroller 80 is between the front 15 and rear 14 wheels. If not an additional wheel may be placed on the attachment as previously described. The seat support element 84 can further include a seat connector 88. In one example, the seat connector 88 can be disposed along a top end of the seat support element 84. The example seat connector 88 may be a multipurpose general connector that allows different seats to be interchanged on the seat support element 84. Any style seat may be configured to connect to the seat connector 88, such as but not limited to, a stroller seat, a baby seat, a bassinet, a pram, a baby carrier, or a car seat, for example. As shown in Figure 9, the seat support element 84 can also include a connector portion 21. The connector portion 21 is capable of connecting the seat attachment to the frame 81 via the attachment portion 17 and the slot 18.

In certain example embodiments, the connector portion 21 of the seat attachment 20 has a cylindrical or substantially cylindrical shape. The connector portion 21 may be inserted into a cylindrical or substantially cylindrical slot 18 of the attachment portion 17 of the stroller 80 of Figure 9-10 to secure the seat attachment and convert the single stroller into a double stroller, as shown in Figure 8A. The connector portion 21 may be of a solid or tubular construction and may be any cross-sectional shape including, but not limited to, circular, polygonal, square, rectangular, and triangular, for example.

Figure 11 is a partial perspective view of the stroller 80 showing a seat attachment housing 1105 according to one example embodiment of the disclosure. Referring now to Figures 8A and 11, the example stroller 80 can include a first seat attachment housing 1105 and the second seat attachment housing 1110. The first seat attachment housing 1105 can include a first end 1105a having a cavity for slidably receiving and fixedly or slidably coupling the first end 1105a to a first end of the left front wheel support frame 81a. For example, the left front wheel support frame 81a

can have a substantially circular or oval cross-section and the cavity of the first end 1105a can have a corresponding circular or oval cross-section to slidably receive a portion of the left front wheel support frame 81a into the cavity. In one example, the left front wheel support frame 81a can be held in the cavity of the first end 1105a by a press fit hold. Alternatively, a spring-loaded button on the left front wheel support frame 81a can be positioned into a corresponding opening along one of the sides of the first seat attachment housing 1105.

The first seat attachment housing 1105 can also include a second end 1105b that includes a second cavity for coupling one of the front wheels 82 to the first seat attachment housing 1105. The wheel 82 may be removably coupled to the second end 1105b of the first seat attachment housing 1105 by a press fit hold. Alternatively, a spring-loaded button 82a on the front wheel apparatus 82 can be positioned into the cavity of the second end 1105b and positioned into a corresponding opening 1115 along one of the sides of the first seat attachment housing 1105. In one example embodiment, the first seat attachment housing 1105 can include an attachment arm 1120 extending off of one side of the first seat attachment housing 1105 in a generally orthogonal direction to the longitudinal axis of the housing 1105. The attachment arm 1120 can include a free end 1105c that includes a cavity for receiving therein and fixedly coupling or slidably coupling the first seat attachment housing 1105 to a first end of the foot rest support frame 81f. The foot rest support frame 81f may be removably coupled to the free end 1105c of the attachment arm 1120 by a press fit hold. Alternatively, a spring-loaded button on the foot rest support frame 81f can be positioned into the cavity of the free end 1105c and positioned into a corresponding opening along one of the sides of the attachment arm 1120.

The second seat attachment housing 1110 can include a first end 1110a having a cavity for slidably receiving and fixedly or slidably coupling the first end 1110a to a first end of the right front wheel support frame 81a. For example, the right front wheel support frame 81a can have a substantially circular or oval cross-section and the cavity of the first end 1110a can have a corresponding circular or oval cross-section to slidably receive a portion of the right front wheel support frame 81a into the cavity. In one example, the right front wheel support frame 81a can be held in the cavity of the first end 1110a by a press fit hold. Alternatively, a spring-loaded button on the right front wheel support frame 81a can be positioned into a corresponding opening along one of the sides of the second seat attachment housing 1110.

The second seat attachment housing 1110 can also include a second end 1110b that includes a second cavity for coupling one of the front wheels 82 to the second seat attachment housing 1110. The wheel 82 may be removably coupled to the second end 1110b of the second seat attachment housing 1110 by a press fit hold. Alternatively, a spring-loaded button on the front wheel apparatus 82 can be positioned into the cavity of the second end 1110b and positioned into a corresponding opening along one of the sides of the second seat attachment housing 1110. In one example embodiment, the second seat attachment housing 1110 can include an attachment arm 1125 extending off of one side of the second seat attachment housing 1110 in a generally orthogonal direction to the longitudinal axis of the housing 1110. The attachment arm 1125 can include a free end 1110c that includes a cavity for receiving therein and fixedly coupling or slidably coupling the second seat attachment housing 1110 to a second distal end of the foot rest support frame 81f. The second end of the foot rest support frame 81f may be removably coupled to the free end 1110c of the attachment arm 1125 by a press fit hold. Alternatively, a spring-loaded button on the foot rest support frame 81f can be positioned into the cavity of the free end 1110c and positioned into a corresponding opening along one of the sides of the attachment arm 1125.

In certain example embodiments, all or a portion of each of the seat attachment housings 1105, 1110 can be hollowed out with exterior sides. Each of the seat attachment housings 1105, 1110 can include an opening 1130 positioned along a top side of the respective seat attachment housings 1105, 1110. The opening 1130 can provide access to an adapter receiving cavity (see Figure 12) for receiving therein at least a portion of the removable seat attachment adapter 84 (see Figure 13A). Each seat attachment housing 1105, 1110 can also include a sliding door 1135. The sliding door 1135 is configured to be manually adjustable from a closed position to an open position by slidably opening the door 1135 along the top side of the seat attachment housing 1105, 1110 to provide access to the opening 1130 and adapter receiving cavity when the parent or guardian wants to insert and couple the removable seat attachment adapter 84 to the seat attachment housing 1105, 1110 and frame 81 in order to couple the second stroller seat 85 to the stroller 80. In one example, each seat attachment housing 1105, 1110 can include one or more rails either disposed above or below a top surface of the seat attachment housing 1105, 1110 that provide a guide way for slidably opening and closing the door 1135. In one example, the door 1135 can include a tab 1140 extending upward from a top surface of the door 1135 to provide a gripping area to grip the door 1135 and slide it open and closed. For example, a parent or guardian

can use a finger against the tab 1140 and apply pressure against the tab 1140 to open the door 1135 from a closed configuration to an open configuration.

The sliding door 1135 is also configured to be manually adjustable from an open configuration to a closed configuration by slidably closing the door 1135 along the top side of the seat attachment housing 1105, 1110 to prevent access to the opening 1130 and adapter receiving cavity when the second stroller seat 85 is not in use. In one example, the parent or guardian can press a finger against the tab 1140 and apply pressure against the tab 1140 to slide the door 1135 from the open configuration to the closed configuration.

Figure 12 is a partial perspective view of one of the seat attachment housings 1105, 1110 according to one example embodiment of the disclosure. Referring now to Figures 8A, 11, and 12, the door 1135 of the seat attachment housing 1105, 1110 is shown having been slid into the open configuration exposing the opening 1130 and the adapter receiving cavity 1205. The adapter receiving cavity 1205 can have any size and shape for removably coupling a portion of a removable seat attachment adapter 84 therein. In one example embodiment, all or a portion of the cross-sectional shape of the adapter receiving cavity 1205 can be keyed or have a keyed shape 1210 and all or a portion of the removable seat attachment adapter 84 can have a corresponding outer perimeter shape such that the removable seat attachment adapter 84 can only be inserted into the adapter receiving cavity 1205 in one, proper orientation.

Figures 13A-C are partial perspective views of the removable seat attachment adapter 84 coupled to the seat attachment housing 1105 according to one example embodiment of the disclosure. Now referring to Figures 8A, 11, 12, and 13A-C, once the door 1135 has been moved into the open configuration exposing the opening 1130 and the adapter receiving cavity 1205, a first end 84a of the removable seat attachment adapter 84 can be inserted into the adapter receiving cavity 1205. In certain example embodiments, the adapter receiving cavity 1205 can include one or more stop flanges 1315, 1320 that extend out from an inner surface of the cavity 1205 and into the cavity area to abut against a bottom side of the first end 84a of the removable seat attachment adapter 84 when the adapter 84 has penetrated a sufficient amount into the adapter receiving cavity 1205. Once the adapter 84 is inserted into the cavity 1205 and removably coupled to the seat attachment housing 1105, a stroller seat can be removable coupled to a seat connector disposed on or adjacent to the second end 84b of the removable seat attachment adapter 84. The seat connector on the second end 84b can be a multipurpose general connector that allows different seats to be

interchangeably connected to the removable seat attachment adapter 84. Any style seat may be configured to connect to the seat connector including, but not limited to, a stroller seat, a baby seat, a bassinet, a pram, a baby carrier, or a car seat, for example.

The removable seat attachment adapter 84 can also include a stop collar 1335 disposed a predetermined distance up from the first end 84a of the adapter 84. In one example embodiment, the stop collar 1335 is sized and shaped so that it will not fit into the opening 1130 and will not fit into the adapter receiving cavity 1205 as the first end 84a of the adapter 84 is being inserted into the adapter receiving cavity 1205. The size and shape of the outer surface of the stop collar 1335, being greater than that of the outer surface of the previous portion of the first end 84a inserted into the adapter receiving cavity 1205 will contact and abut an outer surface of the seat attachment housing 1105 when the adapter 84 has penetrated a sufficient amount into the adapter receiving cavity 1205.

The removable seat attachment adapter 84 can also include a spring-loaded latching tab 1305 disposed along one side of the adapter 84 between the first end 84a and the stop collar 1335. In certain example embodiments, the spring-loaded latching tab 1305 can be spring biased into an extended position (as shown in Figure 13B) via, for example, a spring (not shown). As the adapter 84 is first being inserted into the adapter receiving cavity 1205, the width of the adapter 84 at the point of the spring-loaded latching tab 1305, is greater than the width of the cavity 1205, which causes one or more side walls of the cavity 1205 to apply a force to the spring-loaded latching tab 1305 and push it inward from the extended position towards a retracted position, thereby allowing the first end 84a of the adapter 84 to continue moving into the adapter receiving cavity 1205. When the adapter 84 is inserted into the adapter receiving cavity 1205 a sufficient distance (which can be configurable based on the design specifics on the stroller), the spring-loaded latching tab 1305 can be positioned adjacent a tab receiver 1307. The tab receiver 1307 can be a cut-out or opening along one of the side walls of the cavity 1205 that allows the tab 1305 to move back to the extended position. The tab receiver 1307 can include a tab retainer surface 1310 that abuts a top side of the tab 1305 and prevents the removable seat attachment adapter 84 from being removed from the adapter receiving cavity 1205 while the spring-loaded latch tab 1305 is in the extended position.

The removable seat attachment adapter 84 can also include a tab release button 1330 that is operatively coupled to and configured to move the spring-loaded latching tab 1305 from the extended position to the retracted position via, for example, a guide wire 1325 or other attachment

mechanism. For example, when the removable seat attachment adapter 84 is latched into the seat attachment housing 1105, a parent or guardian can grab the removable seat attachment adapter 84 and depress the tab release button 1330, causing the guide wire to pull the spring-loaded latching tab 1305 inward from the extended position to the retracted position with a force greater than the spring biasing force on the tab 1305 and allowing the parent or guardian to remove the removable seat attachment adapter 84 from the adapter receiving cavity 1205 using only a single hand. Thereby, the ease of decoupling the removable seat attachment adapter 84 from the stroller frame 81 is improved.

In addition, as shown in Figure 13B, in certain example embodiments, the bottom end of the adapter receiving cavity 1205 and corresponding bottom end of the seat attachment housing 1105 can be open 1340 to the environment. Leaving the bottom side of the cavity 1205 open 1340 to the environment helps to prevent liquid and material build-up in the cavity 1205 when the removable seat attachment adapter 84 is not coupled into the cavity 1205 by allowing the liquid and materials to pass through the cavity 1205 and out of the bottom of the seat attachment housing 1105. This is especially beneficial when the parent or guardian removes the removable seat attachment adapter 84 from the cavity 1205 but does slide the door 1135 into the closed position to close up the opening 1130.

Figures 14A-C are partial perspective views of an alternative embodiment of the seat attachment housing 1405, 1410 according to another example embodiment of the disclosure. Referring now to Figures 8A, 11, and 14A-C, the seat attachment housings 1405, 1410 are substantially the same as the seat attachment housings 1105, 1110 described in Figures 11-13C except for as described below. Therefore, the description of the seat attachment housings 1105, 1110 in Figures 11-13C above is incorporated herein for the alternative seat attachment housings 1405, 1410, except with regard to the distinctions described below.

As shown in Figure 14C, each seat attachment housing 1405, 1410 includes an opening or open end 1130 positioned along a top side of the respective seat attachment housings 1405, 1410. The opening 1130 can provide access to an adapter receiving cavity 1205. Each seat attachment housing 1405, 1410 also includes one or more stop flanges 1315, 1320 that extend out from an interior wall 1411 of the cavity 1205 and into the cavity area. In addition, the bottom end of the adapter receiving cavity 1205 and corresponding bottom end of each seat attachment housing

1405, 1410 can have an opening or open end 1340 to the environment and with the cavity 1205 and opening 1130 provides a through-hole 1413 through the seat attachment housing 1405, 1410.

Each seat attachment housing 1405, 1410 can include a rotating door 1415 rotatably coupled to the seat attachment housing 1405, 1410. For example, the rotating door 1415 can have a fixed end that is rotatably coupled to the top side of the seat attachment housing 1405, 1410 or an interior wall 1411 of the opening 1130 or adapter receiving cavity 1205 by way of one or more hinges 1420. Alternatively, other devices may be used to allow the door 1415 to rotate from a closed configuration 1415a to an open configuration 1415b, as shown in Figure 14C. In certain example embodiments, the door 1415 and/or the rotating mechanism or hinge 1420 that the door 1415 is coupled to can be spring-biased into the closed configuration 1415a through the use of a spring or other biasing means. Spring-biasing the door 1415 into a closed configuration 1415a can help to prevent fluids and other material contaminants from entering the adapter receiving cavity 1205 when the removable seat attachment adapter 84 is not coupled into the adapter receiving cavity 1205.

When a parent or guardian wants to add a second stroller seat 85 to the stroller 80, they can insert the removable seat attachment adapter 84 into the adapter receiving cavity 1205 by pressing or applying a force with the first end 84a of the removable seat attachment adapter 84 against the top side of the rotating door 1415 with a force that is greater than the spring-biasing force. This will cause the door 1415 to rotate from the closed configuration 1415a towards the open configuration 1415b and allow the first end 84a of the removable seat attachment adapter to enter into the adapter receiving cavity 1205 and be coupled to the seat attachment housing 1405, 1410.

When the parent or guardian removes the removable seat attachment adapter 84, as described above with regard to Figures 13A-C, as the first end 84a of the removable seat attachment adapter 84 exits the adapter receiving cavity 1205 and opening 1130, the spring-bias of the hinge 1420 or door 1415 will cause the door 1415 to automatically rotate from the open configuration 1415b to the closed configuration 1415a, thereby limiting access to the opening 1130 and the adapter receiving cavity 1205 from the top side of the seat attachment housing 1405, 1410.

While the above description contains many specifics, these specifics should not be construed as limitations on the scope of the disclosure, but merely as exemplifications of the disclosed embodiments. Those skilled in the art will envision many other possible variations that are within the scope of the disclosure.

CLAIMS

1. A stroller system for supporting a front stroller seat and a rear stroller seat, the system comprising:

a pair of rear wheels;

a pair of front wheels;

a frame including a handle portion, a rear wheel support portion, a front wheel support portion, and a folding mechanism connecting the front wheel support portion and the handle portion in both an unfolded configuration and in a folded configuration, wherein the frame includes a stroller seat support portion positioned at a first vertical position adjacent the handle portion, and wherein the front wheel support portion and the handle portion are substantially parallel when the frame is in the unfolded configuration; and

a front seat attachment configured for attachment to the front wheel support portion at a second vertical position substantially lower than the first vertical position,

wherein the front seat attachment is configured to releasably connect to and support the front stroller seat in either a forward-facing configuration or a backward-facing configuration,

wherein the front seat attachment is configured to support the front stroller seat substantially over the front wheels so that a center of gravity of the stroller system is between the front wheels and the rear wheels;

wherein the rear wheel support portion extends diagonally relative to the front wheel support portion when the frame is in the unfolded configuration, and the rear wheel support portion is disposed adjacent to both the front wheel support portion and the handle portion when the frame is in the folded configuration; and

wherein the stroller seat support portion positioned at the first vertical position and the front seat attachment at the second vertical position create an inline descending configuration of the rear stroller seat and the front stroller seat.

2. The stroller system of claim 1, wherein the folding mechanism includes at least one pivot point.

3. The stroller system of claim 1, wherein the stroller seat support portion is configured to support the rear stroller seat substantially over the rear wheels.

4. The stroller system of claim 1, wherein the front seat attachment includes a first connector portion and a second connector portion, the first connector portion configured to removably attach to a left side of the front wheel support portion, and the second connector portion configured to removably attach to a right side of the front wheel support portion.

5. The stroller system of claim 4, wherein the front seat attachment includes a pair of seat attachment elements configured to releasably support the front stroller seat in either the forward-facing configuration or in the backward-facing configuration.

6. The stroller system of claim 5, wherein the front wheel support portion includes a first attachment portion and a second attachment portion, the first attachment portion on the left side and configured to support the first connector portion, and the second attachment portion on the right side and configured to support the second connector portion.

7. The stroller system of claim 6, wherein the front seat attachment includes at least one attachment frame member.

8. The stroller system of claim 4, wherein the front wheel support portion includes a pair of parallel support members.

9. The stroller system of claim 8, wherein the parallel support members include a pair of attachment portions configured to support the first connector portion and the second connector portion.

10. The stroller system of claim 9, wherein the attachment portions include left and right slots in the parallel support members configured to receive the first connector portion and the second connector portion.

11. The stroller system of claim 8, wherein the parallel support members include a pair of tubular structures, each of the tubular structures having a rounded cross-section.

12. The stroller system of claim 8, wherein the rear wheel support portion includes a pair of parallel support members connected by the folding mechanism to the parallel support members of the front wheel support portion.

13. The stroller system of claim 12, wherein the folding mechanism includes a pair of pivots spaced apart and configured to connect corresponding ones of the parallel support members of the rear and front wheel support portions.

14. The stroller system of claim 13, wherein the handle portion includes a pair of parallel support members and a crossbar, wherein the parallel support members of the handle portion connect to the parallel support members of the front wheel support portion via the folding mechanism, and wherein the parallel support members of the handle portion and of the front wheel support portion extend diagonally downwards from the crossbar of the handle portion.

15. The stroller system of claim 1, wherein the stroller seat support portion is configured to releasably support the rear stroller seat.

16. The stroller system of claim 1, wherein the stroller seat support portion is configured to support the rear stroller seat in either a forward-facing configuration or a backward-facing configuration.

17. The stroller system of claim 1, wherein the front seat attachment is further configured to connect to one or more sides of the front stroller seat.

18. The stroller system of claim 1, wherein the rear wheel support portion includes the stroller seat support portion.

19. The stroller system of claim 1, wherein the pair of front wheels includes only two front wheels.

20. The stroller system of claim 19, wherein the only two front wheels are laterally spaced apart from each other on a left side and a right side of the front wheel support portion.

21. The stroller system of claim 1, wherein the folded configuration includes at least partially overlapping the front wheel support portion and the handle portion.

22. The stroller system of claim 1, wherein the front seat attachment is configured to releasably attach to the front wheel support portion.

ABSTRACT

Embodiments include strollers having removable seats. An example stroller may include rear wheels, front wheels, and a frame including a handle portion, a rear wheel support portion, a front wheel support portion and a folding mechanism connecting the front wheel support portion and the handle portion in both an unfolded configuration and in a folded configuration. The frame may include a stroller seat support portion positioned at a first vertical position adjacent the handle portion, and a front seat attachment configured for attachment to the front wheel support portion at a second vertical position substantially lower than the first vertical position. The front seat attachment may be configured to support the front stroller seat substantially over the front wheels so that a center of gravity of the stroller system is between the front wheels and the rear wheels.

UNITED STATES
PATENT AND TRADEMARK OFFICE

P.O. Box 1450
Alexandria, VA 22313 - 1450
www.uspto.gov

ELECTRONIC PAYMENT RECEIPT

APPLICATION #	RECEIPT DATE / TIME	ATTORNEY DOCKET #
18/051,053	10/31/2022 10:55:06 AM ET	34757-2679CON

Title of Invention

Removable Seat Attachments for Strollers

Application Information

APPLICATION TYPE	Utility - Nonprovisional Application under 35 USC 111(a)	PATENT #	-
CONFIRMATION #	6816	FILED BY	Umar Bakhsh
PATENT CENTER #	61122495	AUTHORIZED BY	-
CUSTOMER #	134811	FILING DATE	-
CORRESPONDENCE ADDRESS	-	FIRST NAMED INVENTOR	Mark Zehfuss

Payment Information

PAYMENT METHOD	PAYMENT TRANSACTION ID	PAYMENT AUTHORIZED BY
DA / 195029	E20220UA55343994	Umar Bakhsh

PRE-AUTHORIZED ACCOUNT	PRE-AUTHORIZED CATEGORY
195029	37 CFR 1.16 (National application filing, search, and examination fees); 37 CFR 1.17 (Patent application and reexamination processing fees); 37 CFR 1.19 (Document supply fees); 37 CFR 1.20 (Post Issuance fees); 37 CFR 1.21 (Miscellaneous fees and charges)

FEE CODE	DESCRIPTION	ITEM PRICE($)	QUANTITY	ITEM TOTAL($)
1111	UTILITY PATENT APPL. SEARCH FEE	700.00	1	700.00
1011	BASIC FILING FEE - UTILITY (PAPER FILING ALSO REQUIRES NON-ELECTRONIC FILING FEE UNDER 1.16(T))	320.00	1	320.00
1311	PATENT APPL. EXAMINATION FEE	800.00	1	800.00
1202	EACH CLAIM IN EXCESS OF 20	100.00	2	200.00

TOTAL AMOUNT:	$2,020.00

This Acknowledgement Receipt evidences receipt on the noted date by the USPTO of the indicated documents, characterized by the applicant, and including page counts, where applicable. It serves as evidence of receipt similar to a Post Card, as described in MPEP 503.

New Applications Under 35 U.S.C. 111

If a new application is being filed and the application includes the necessary components for filing date (see 37 CFR 1.53(b)-(d) and MPEP 506), a Filing Receipt (37 CFR 1.54) will be issued in due course and the date shown on this Acknowledgement Receipt will establish the filing date of the application

National Stage of an International Application under 35 U.S.C. 371

If a timely submission to enter the national stage of an international application is compliant with the conditions of 35 U.S.C. 371 and other applicable requirements a Form PCT/DO/EO/903 indicating acceptance of the application as a national stage submission under 35 U.S.C. 371 will be issued in addition to the Filing Receipt, in due course.

New International Application Filed with the USPTO as a Receiving Office

If a new international application is being filed and the international application includes the necessary components for an international filing date (see PCT Article 11 and MPEP 1810), a Notification of the International Application Number and of the International Filing Date (Form PCT/RO/105) will be issued in due course, subject to prescriptions concerning national security, and the date shown on this Acknowledgement Receipt will establish the international filing date of the application.

PATENT ASSIGNMENT AND DECLARATION (37 CFR 1.63)

U.S. Patent Appln. No. 15/225,326
Filed: August 1, 2016

Attorney Docket No. 34757-1526

PARTIES TO THE ASSIGNMENT

Assignor(s):

MARK ZEHFUSS
10804 Cherry Hill Drive
Glen Allen, VA 23059

Assignee:
BABY JOGGER, LLC
8575 Magellan Parkway, Suite 1000
Richmond, VA 23227

AGREEMENT

WHEREAS, ASSIGNOR(S) (listed above) are inventor(s) of an invention entitled **"REMOVABLE SEAT ATTACHMENT FOR A STROLLER"** (Invention) for which a non-provisional application for United States Letters Patent

☒ was filed on August 1, 2016, and accorded U.S. Application No. 15/225,326 ; or

☐ will be filed concurrently with the submission of this executed PATENT ASSIGNMENT for recordation.

ASSIGNOR(S) hereby authorizes and requests ASSIGNEE'S legal representatives, of Sutherland Asbill and Brennan LLP, associated with Customer No. 134811, to insert in the header above and here in

parentheses (U.S. Application No. 15/225,326 , filed August 1, 2016), this application's U.S. application number and filing date, when known.

WHEREAS, ASSIGNEE, a corporation of the State of Virginia, is desirous of acquiring the entire right, title and interest in and to the Invention and in and to any letters patent that may be granted therefor in the United States and in any and all foreign countries;

NOW, THEREFORE, in exchange for good and valuable consideration, the receipt of which is hereby acknowledged, ASSIGNOR(S) hereby sell, assign and transfer unto ASSIGNEE its successors and assigns, the entire right, title and interest in and to said Invention and any improvements thereto, said Application and any and all letters patent which may be granted for said Invention in the United States of America and its territorial possessions and in any and all foreign countries, and in any and all provisional, divisions, reissues, re-examinations and continuations thereof, including the right to file foreign applications directly in the name of ASSIGNEE and to claim priority rights deriving from said application to which said foreign applications are entitled by virtue of international convention, treaty or otherwise, said Invention, application and all letters patent on said Invention to be held and enjoyed by ASSIGNEE and its successors and assigns for their use and benefit and of their successors and assigns as fully and entirely as the same would have been held and enjoyed by ASSIGNOR(S) had this assignment, transfer and sale not been made. ASSIGNOR(S) hereby authorize and request the Commissioner of Patents and Trademarks to issue all letters patent on said Invention to ASSIGNEE. ASSIGNOR(S) agree to execute all instruments and documents required for the making and prosecution of applications for United States and foreign letters patent on said Invention, for litigation regarding said letters patent, or for the purpose of protecting title to said Invention or letters patent therefor.

AND ASSIGNOR(S) DOES HEREBY sell, assign, transfer, and convey to ASSIGNEE, its successors, legal representatives, and assigns all claims for damages and all remedies arising out of any

violation of the rights assigned hereby that may have accrued prior to the date of assignment to ASSIGNEE, or may accrue hereafter, including, but not limited to, the right to sue for, collect, and retain damages for past infringements of said letters patent before or after issuance.

AND ASSIGNOR(S) DOES HEREBY covenant and agree that ASSIGNOR(S) will communicate to said ASSIGNEE, its successors, legal representatives and assigns, any facts known to ASSIGNOR respecting the Invention or said application, and testify in any legal proceeding, assist in the preparation of any other patent property relating to the application and the Invention or any improvements made thereto, sign/execute all lawful papers, provide all requested documents, execute and make all rightful oaths and/or declarations in connection with the application and the Invention including any improvements made thereto, any patent applications filed therefrom, and any continuing application filed from any of the aforementioned applications, and generally do everything possible to aid the ASSIGNEE, its successors, legal representatives and assigns, to obtain and enforce proper patent protection for the Invention in all countries. These provisions are binding upon our heirs, legal representatives, administrators, and assigns.

CORRESPONDENCE ADDRESS

I hereby direct all correspondence and telephone calls in connection with this application be addressed to the number associated with the customer number listed below, which is:

134811

PATENT ASSIGNMENT AND DECLARATION (37 CFR 1.63)

U.S. Patent Appln. No. 15/225,326
Filed: August 1, 2016

Attorney Docket No 34757-1526

DECLARATION

As a below named inventor, I hereby declare that this declaration is directed to:

- ☐ the attached application; or
- ☒ United States application number 15/225,326 filed on August 1, 2016; or
- ☐ PCT international application number _____ filed on _____.
  (We hereby authorize and request the Company or its delegated attorneys or agents to insert above the application number and filing date of the application when known)

The above-identified application was made or authorized to be made by me. I believe that I am the original inventor or an original joint inventor of a claimed Invention in the application.

I have reviewed and understand the contents of the above-identified application, and acknowledge the duty to disclose to the US Patent & Trademark Office all information known to me to be material to the patentability as defined in 37 CFR 1.56.

I hereby acknowledge that any willful false statement made in this declaration is punishable under 18 USC 1001 by fine or imprisonment of not more than five (5) years, or both.

Legal name of inventor: **MARK ZEHFUSS**

Mark Zehfuss

8/2/16
Date

STATE OF Virginia
ss.
COUNTY OF Henrico

This 2nd day of August, 2016 before me personally came the above-named **Mark Zehfuss**, to me personally known as the individual who executed the foregoing assignment, who acknowledged to me that he/she executed the same of his/her own free will for the purposes therein set forth.

Seal

DARNELL TREVON TAYLOR
COMMONWEALTH OF VIRGINIA
REG. NO. 7660517 EXP. 8-31-19
NOTARY PUBLIC

Darnell Trevon Taylor
(Notary Public)

37061224.1

UNITED STATES
PATENT AND TRADEMARK OFFICE

P.O. Box 1450
Alexandria, VA 22313 - 1450
www.uspto.gov

ELECTRONIC ACKNOWLEDGEMENT RECEIPT

APPLICATION #	RECEIPT DATE / TIME	ATTORNEY DOCKET #
18/051,053	**10/31/2022 10:55:06 AM ET**	**34757-2679CON**

Title of Invention

Removable Seat Attachments for Strollers

Application Information

APPLICATION TYPE	Utility - Nonprovisional Application under 35 USC 111(a)	PATENT #	-
CONFIRMATION #	6816	FILED BY	Umar Bakhsh
PATENT CENTER #	61122495	FILING DATE	-
CUSTOMER #	134811	FIRST NAMED INVENTOR	Mark Zehfuss
CORRESPONDENCE ADDRESS	-	AUTHORIZED BY	-

Documents

TOTAL DOCUMENTS: 6

DOCUMENT		PAGES	DESCRIPTION	SIZE (KB)
generatedADS61122495.pdf		7	Application Data Sheet	160 KB
2679CONdecs.pdf		4	Oath or Declaration filed	459 KB
2679CON Drawings.PDF		18	Drawings-only black and white line drawings	311 KB
spec.pdf		27	-	148 KB
spec-SPEC.pdf	(1-22)	22	Specification	132 KB
spec-CLM.pdf	(23-26)	4	Claims	31 KB
spec-ABST.pdf	(27-27)	1	Abstract	22 KB

Digest

DOCUMENT	MESSAGE DIGEST(SHA-512)
generatedADS61122495.pdf	E2CE5E01D7A0CFCC0067B39A4CFB8ABDC616605303F6539612420E38C2A41A5752759CF15A52C9D6B5D655868BD48B80A61B44F375DAF512B3EAFA0597715F1F
2679CONdecs.pdf	56F2135AFD0E8EDE7FD7999D19B7FEBA1789990151CDB5977BAFC06F35D8D2B56CDCA22254EB013AA5915AA3E0FDA49ED8335339CA0D3D869363D3292864D9F1
2679CON Drawings.PDF	FB0524AFF7C0CF54C33CB623C945FD451F7623038DFB88B6E1A63F170347CC5F0C8306E32F0C145716F746E1954AB6643EB320EF526D5CC245C4136B991FC21A
spec.pdf	E10CF5A30C3C33C9BE6ED241E1644D192809F693FBCB092D0DAF6684BC1F7BD3943DB483FED364BFEB3439837DC6AEFA7325DB81C2ABF5E44BF7CAB0974BCCED
spec-SPEC.pdf	C84281CB79CC30EAEEAF4DD2F55EE0778D452EFF296CECB701D91B34E6C255F3908DF4F0054C5DB7CCF47B6C2A0978DBDB3D74BA50DC502D66313F4653193928
spec-CLM.pdf	A12DFE9179D13509D21660FB77F9ECEDB4C2A98186F36FBF9E91A6D3F73990C28DF3B526A7E1DD3966B980ECB62F06F090AA30B9F228566966AD7044A5AB75CA
spec-ABST.pdf	0C9712D34B66BA67B0C93C08320CACD8806EE7EB6742F1F7FA8B1CC51519A7D32D7F77AB59B7752027FF1D4FC9248385EC3B65DDAB7CF34C3D5B1594936B9953

This Acknowledgement Receipt evidences receipt on the noted date by the USPTO of the indicated documents, characterized by the applicant, and including page counts, where applicable. It serves as evidence of receipt similar to a Post Card, as described in MPEP 503.

New Applications Under 35 U.S.C. 111

If a new application is being filed and the application includes the necessary components for filing date (see 37 CFR 1.53(b)-(d) and MPEP 506), a Filing Receipt (37 CFR 1.54) will be issued in due course and the date shown on this Acknowledgement Receipt will establish the filing date of the application

National Stage of an International Application under 35 U.S.C. 371

If a timely submission to enter the national stage of an international application is compliant with the conditions of 35 U.S.C. 371 and other applicable requirements a Form PCT/DO/EO/903 indicating acceptance of the application as a national stage submission under 35 U.S.C. 371 will be issued in addition to the Filing Receipt, in due course.

New International Application Filed with the USPTO as a Receiving Office

If a new international application is being filed and the international application includes the necessary components for an international filing date (see PCT Article 11 and MPEP 1810), a Notification of the International Application Number and of the International Filing Date (Form PCT/RO/105) will be issued in due course, subject to prescriptions concerning national security, and the date shown on this Acknowledgement Receipt will establish the international filing date of the application.

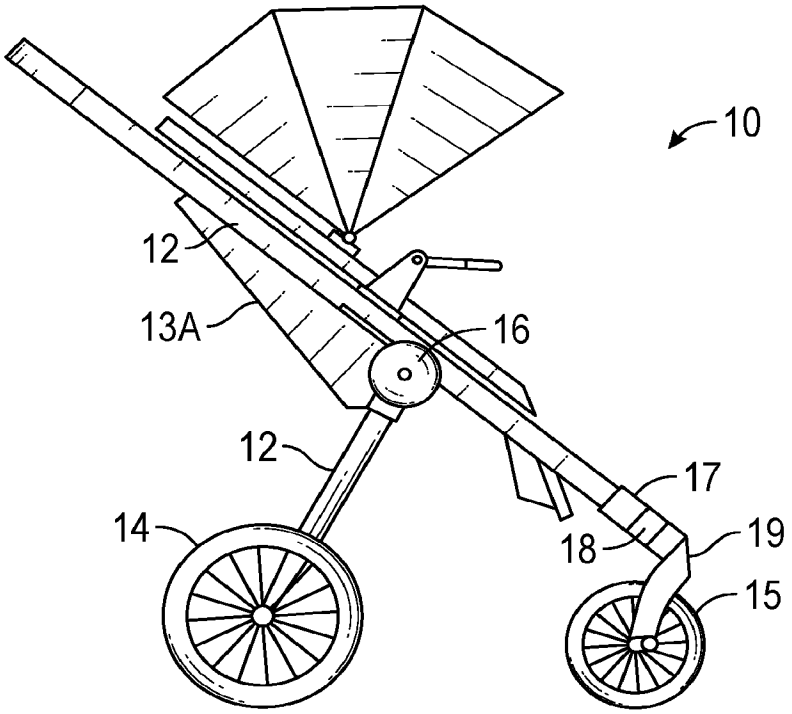

FIG. 1

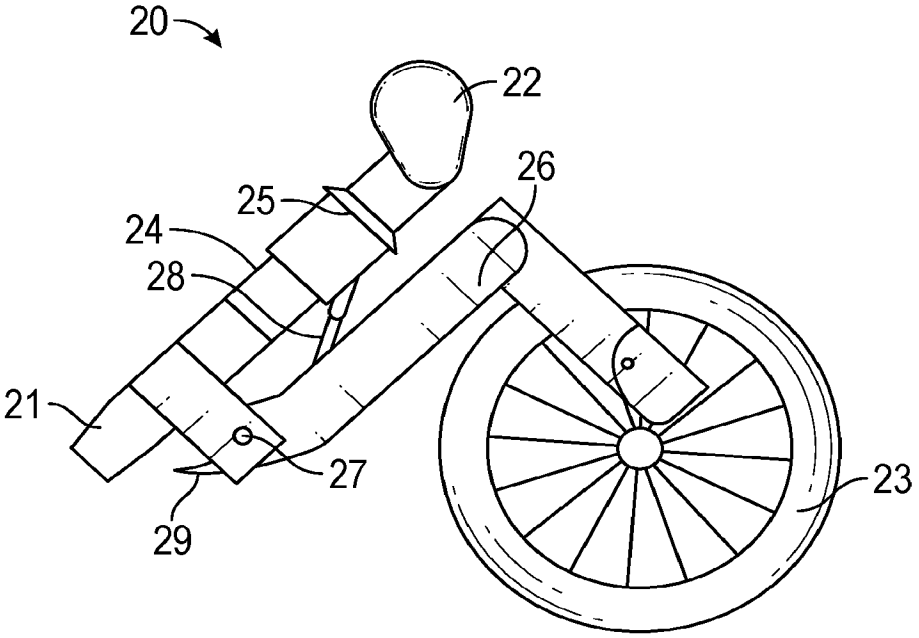

FIG. 2

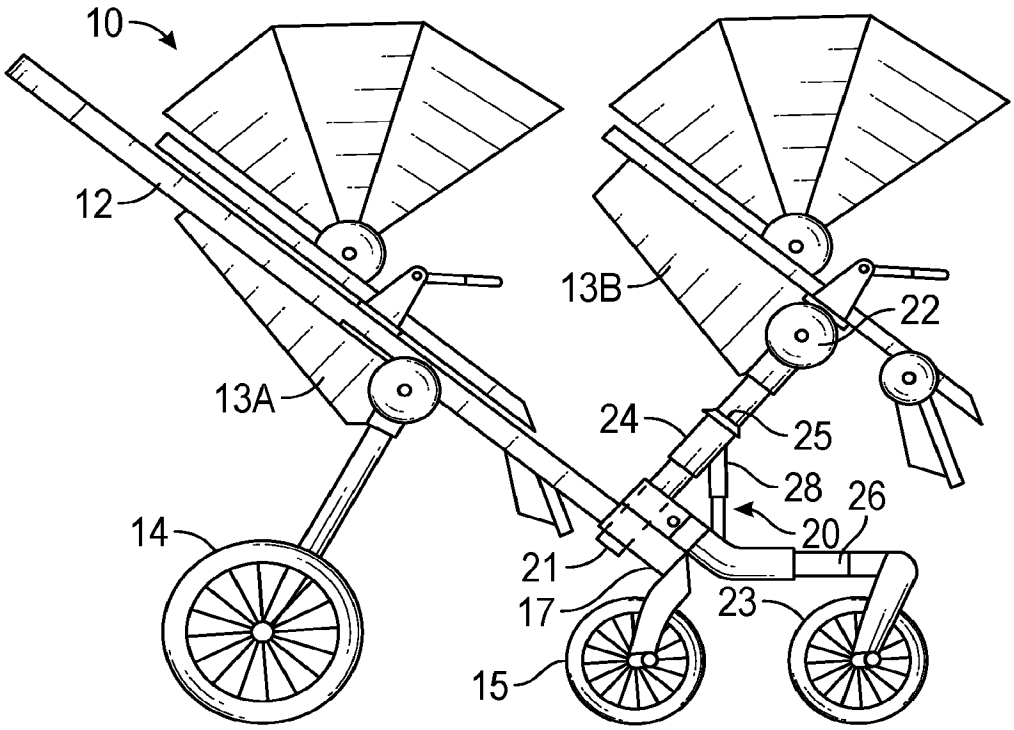

FIG. 3

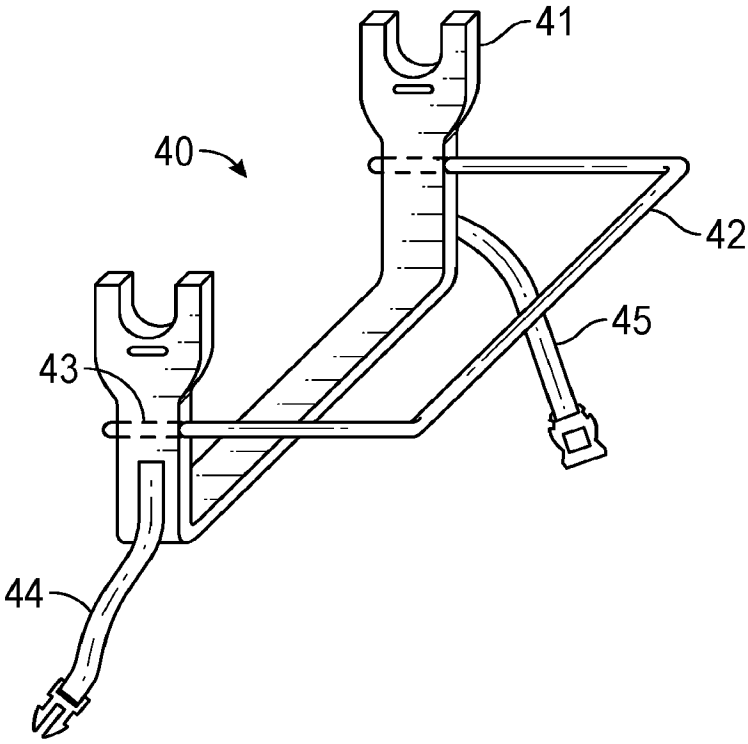

FIG. 4

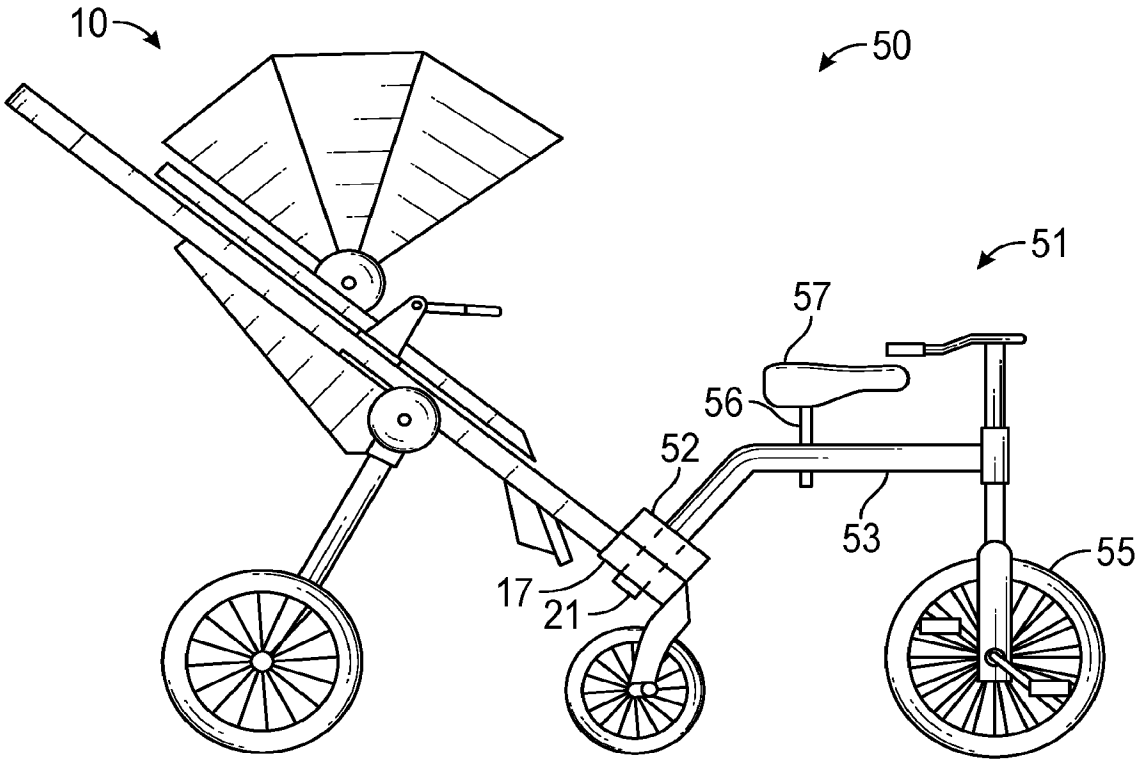

FIG. 5

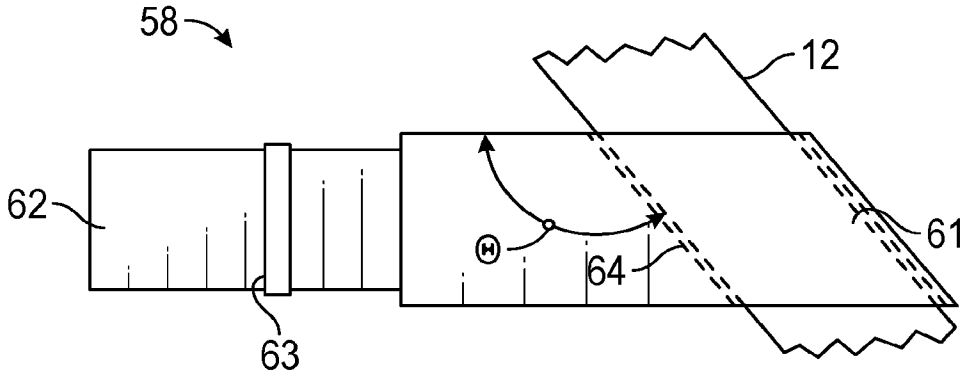

FIG. 6A

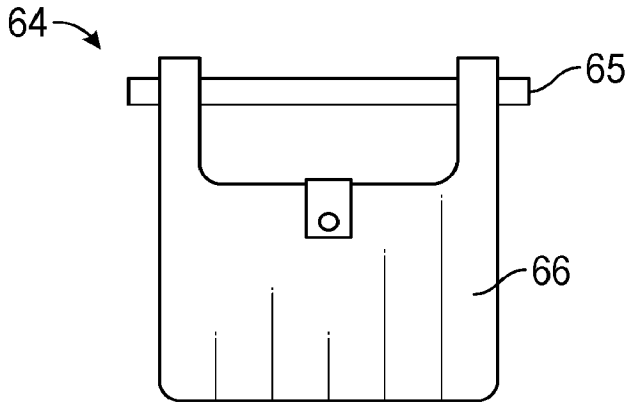

FIG. 6B

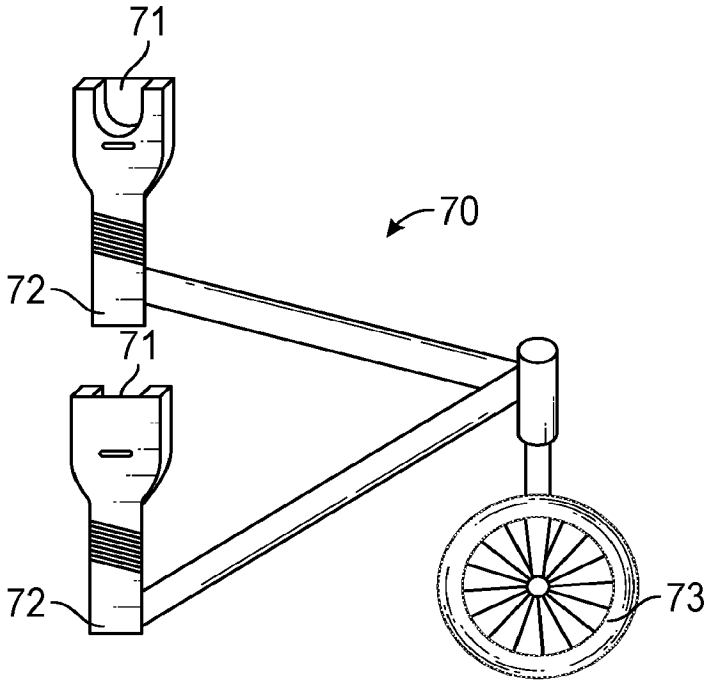

FIG. 7

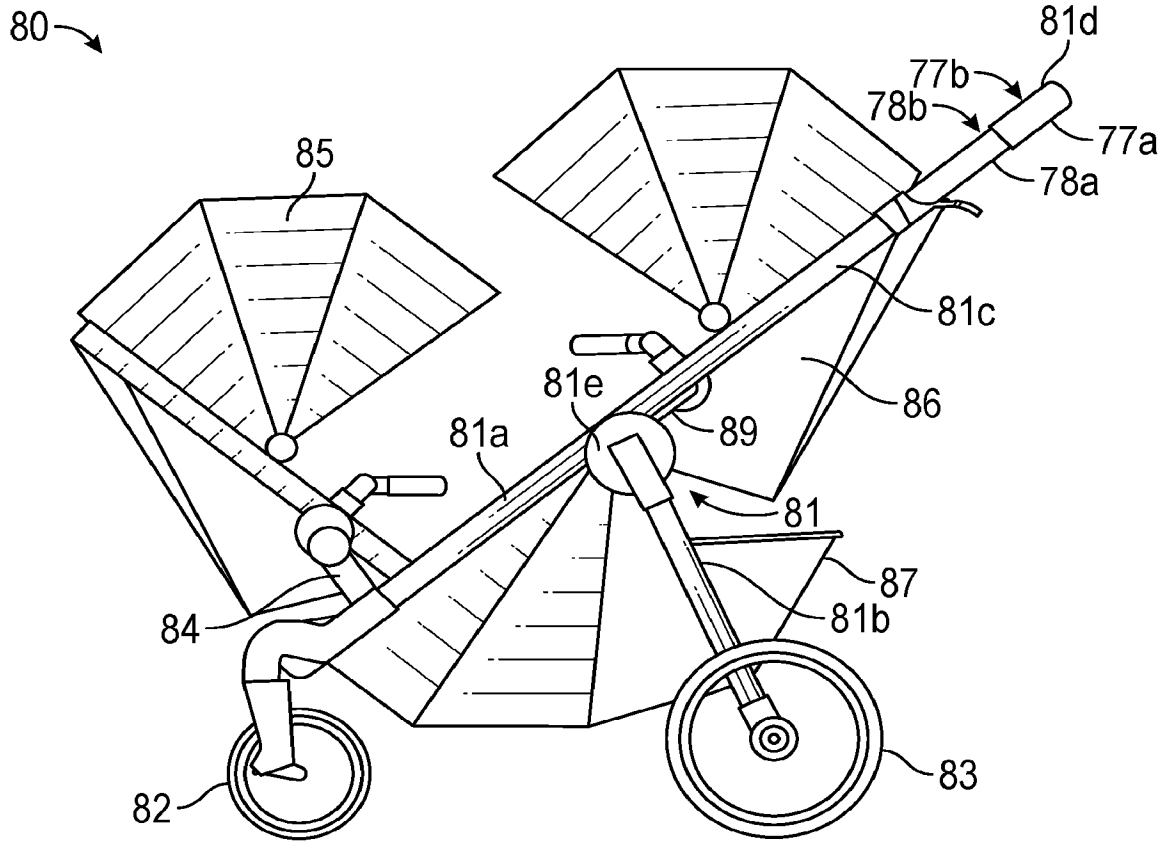

FIG. 8A

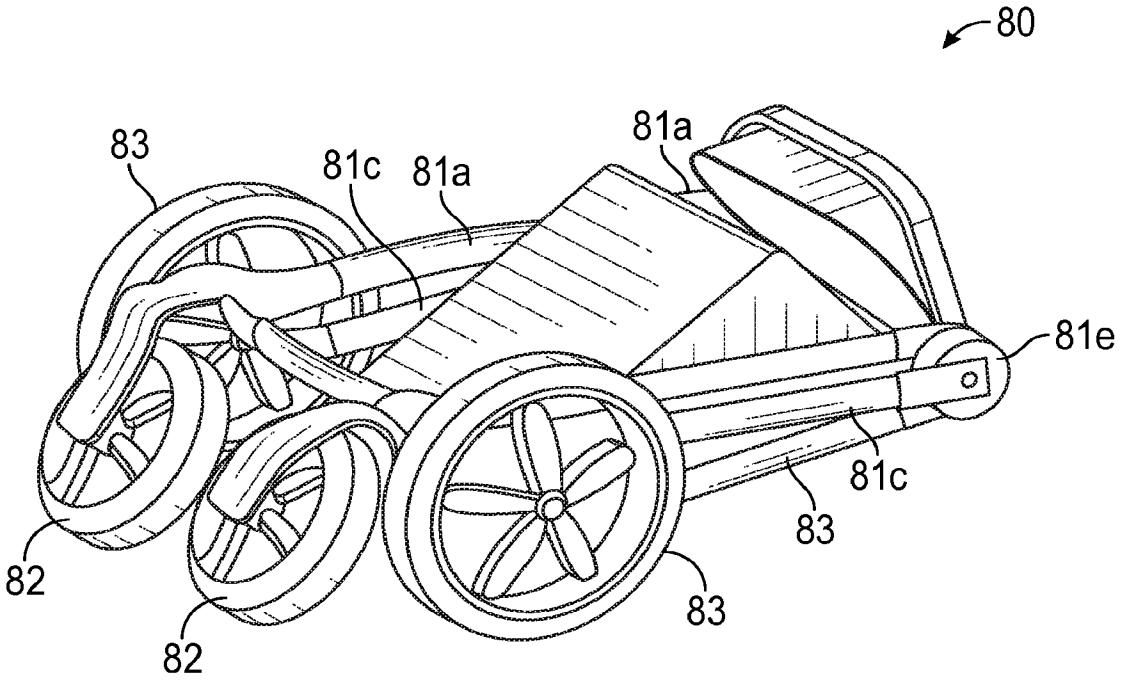

FIG. 8B

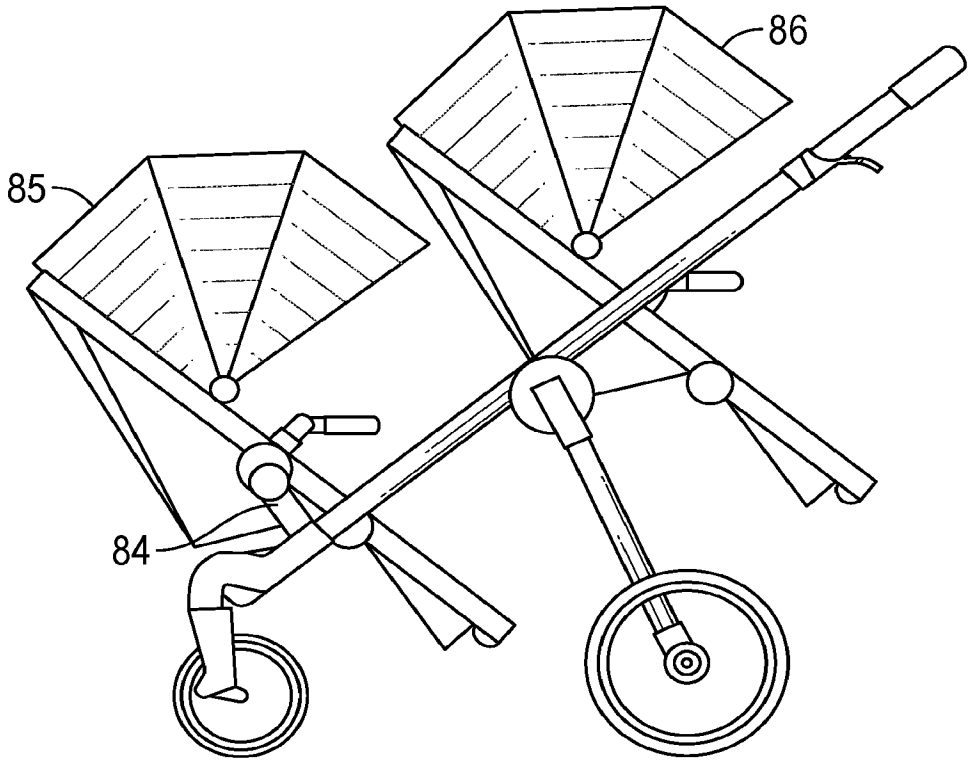

FIG. 8C

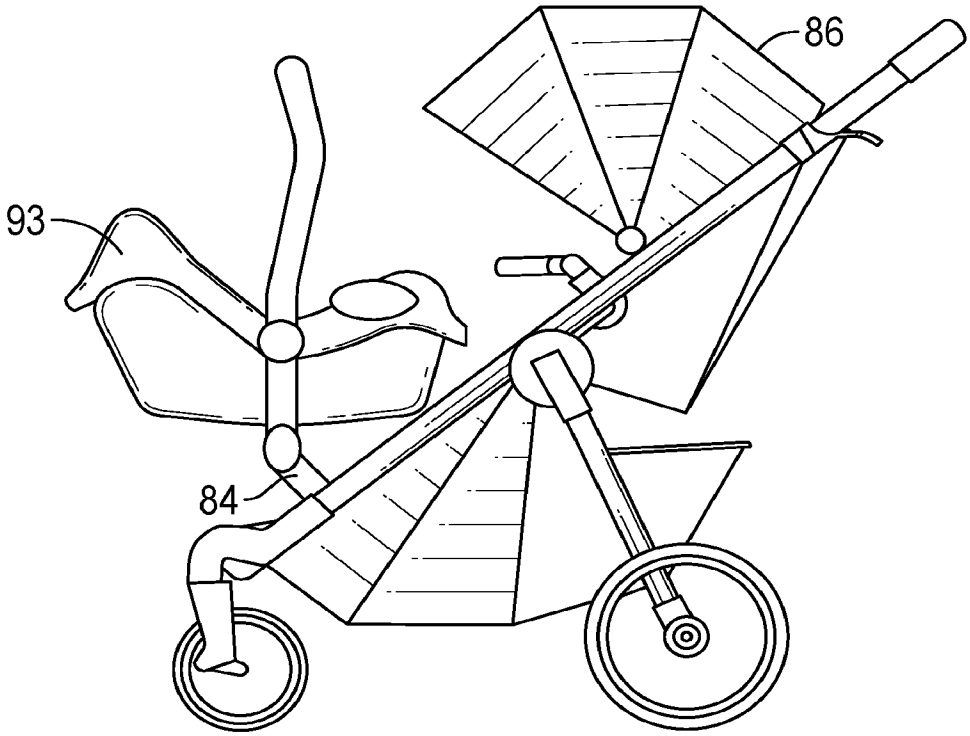

FIG. 8D

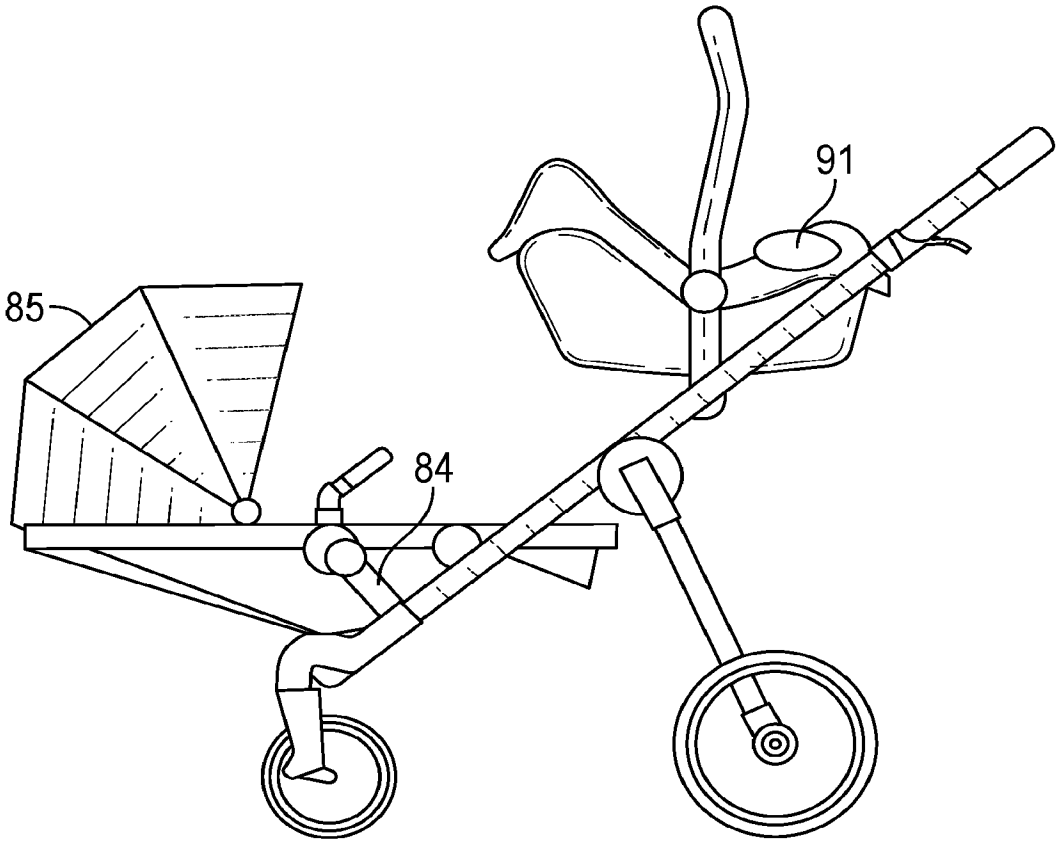

FIG. 8E

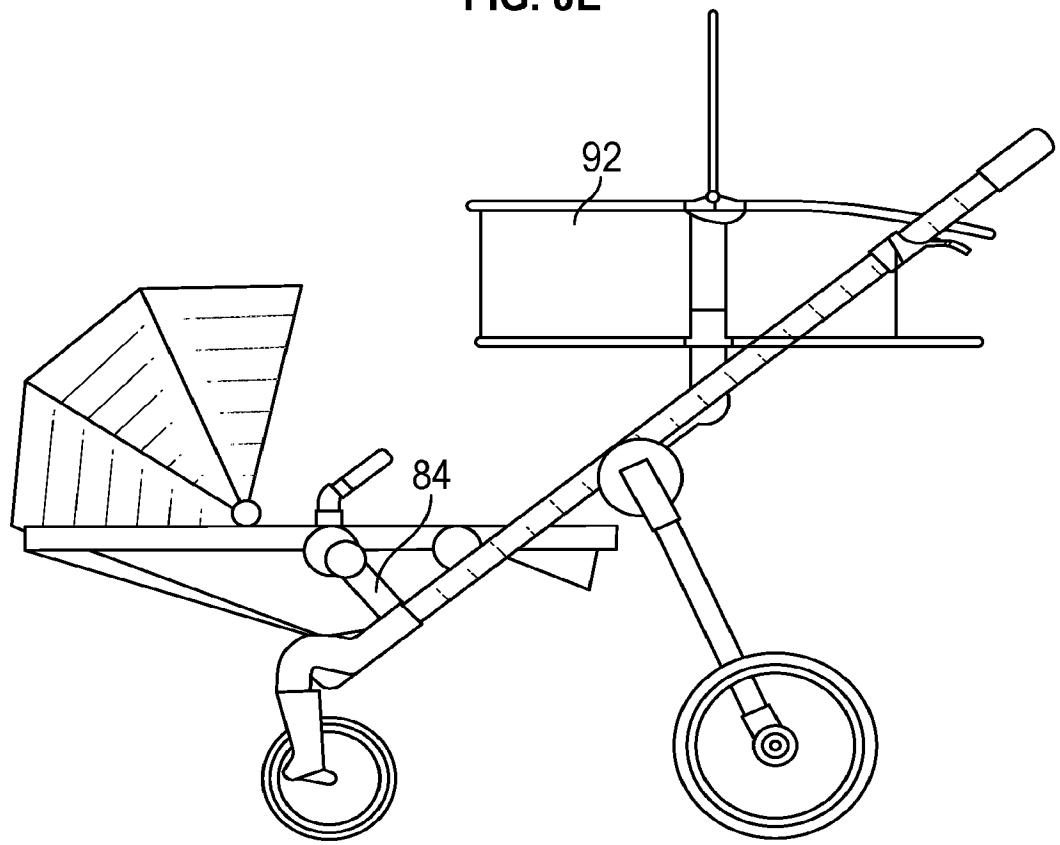

FIG. 8F

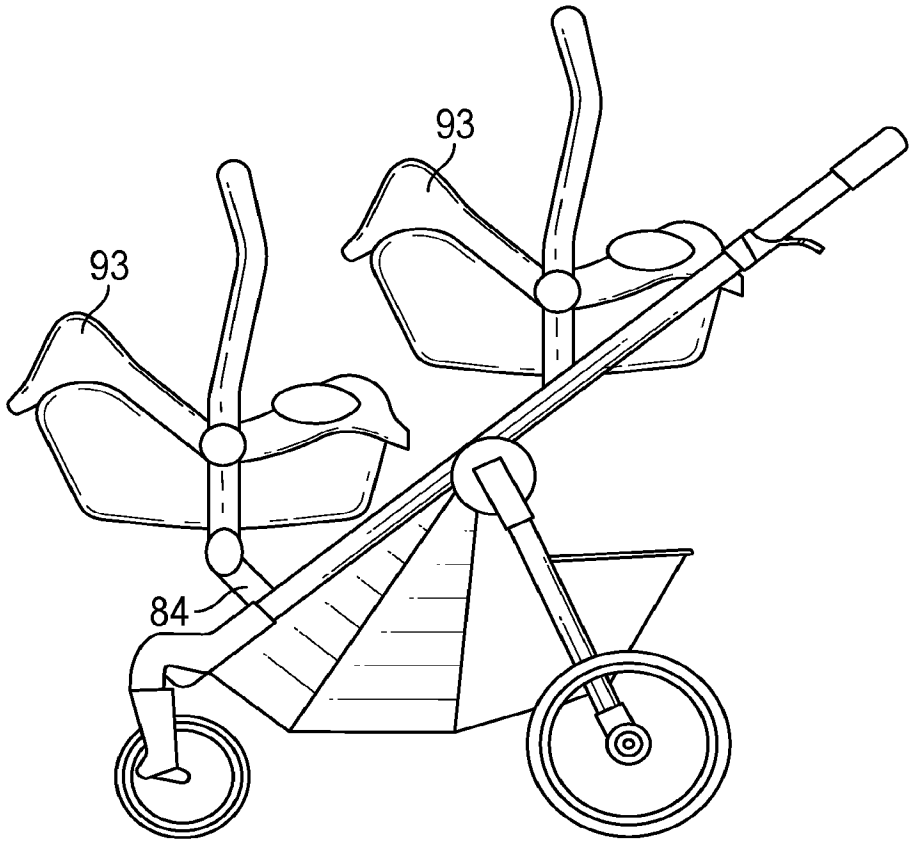

FIG. 8G

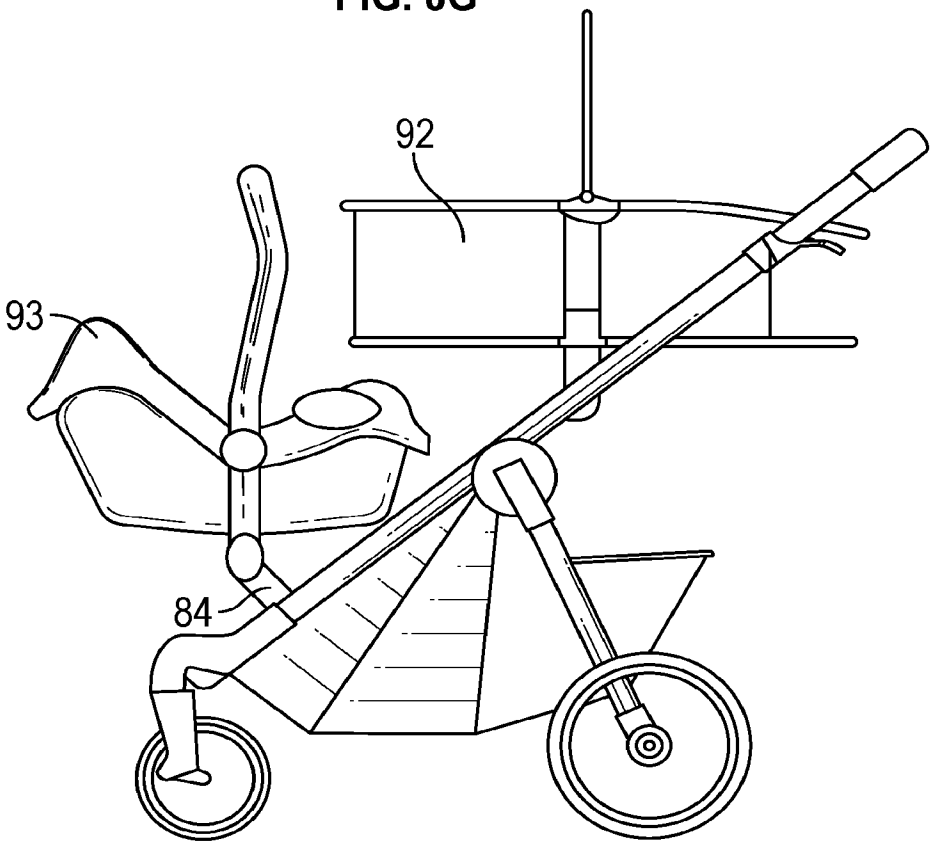

FIG. 8H

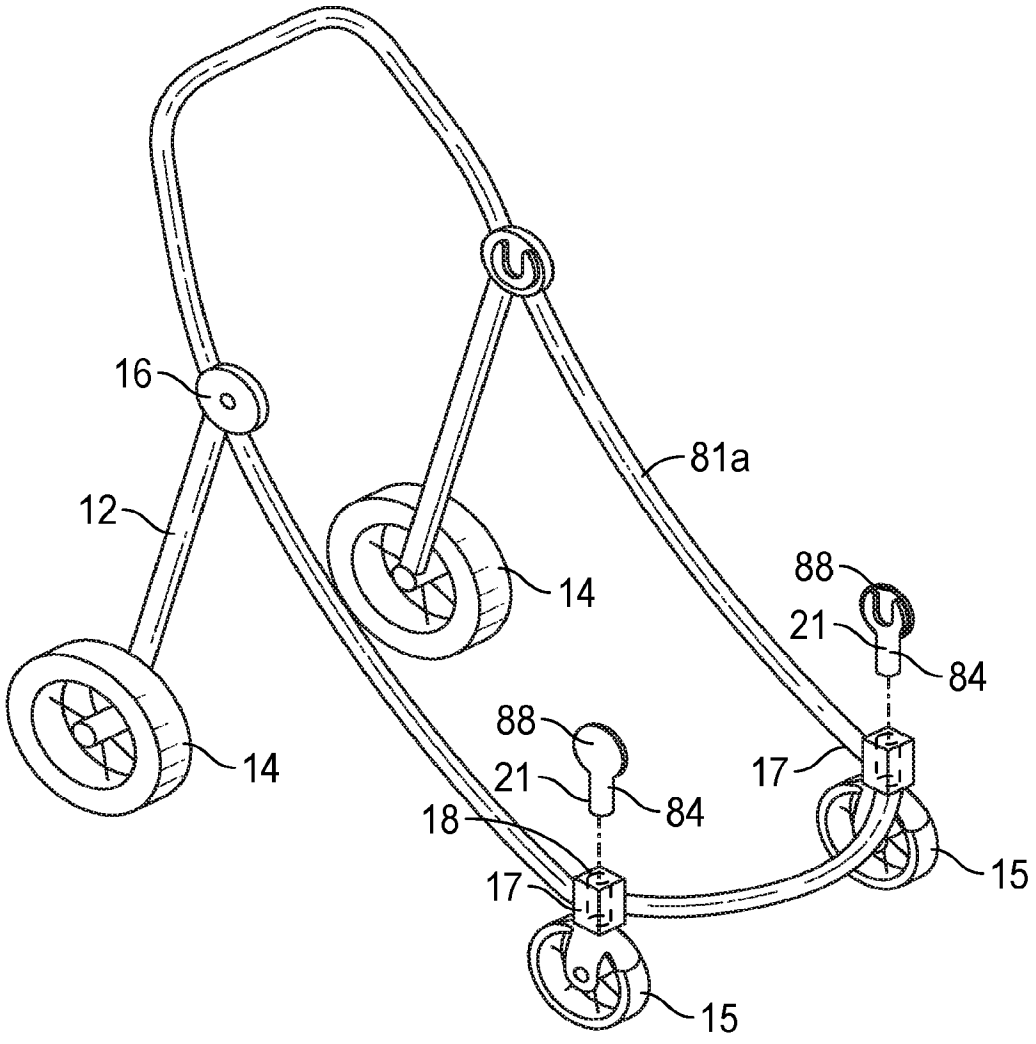

FIG. 9

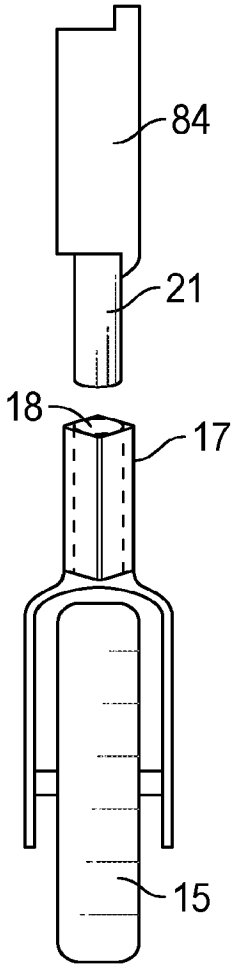

FIG. 10

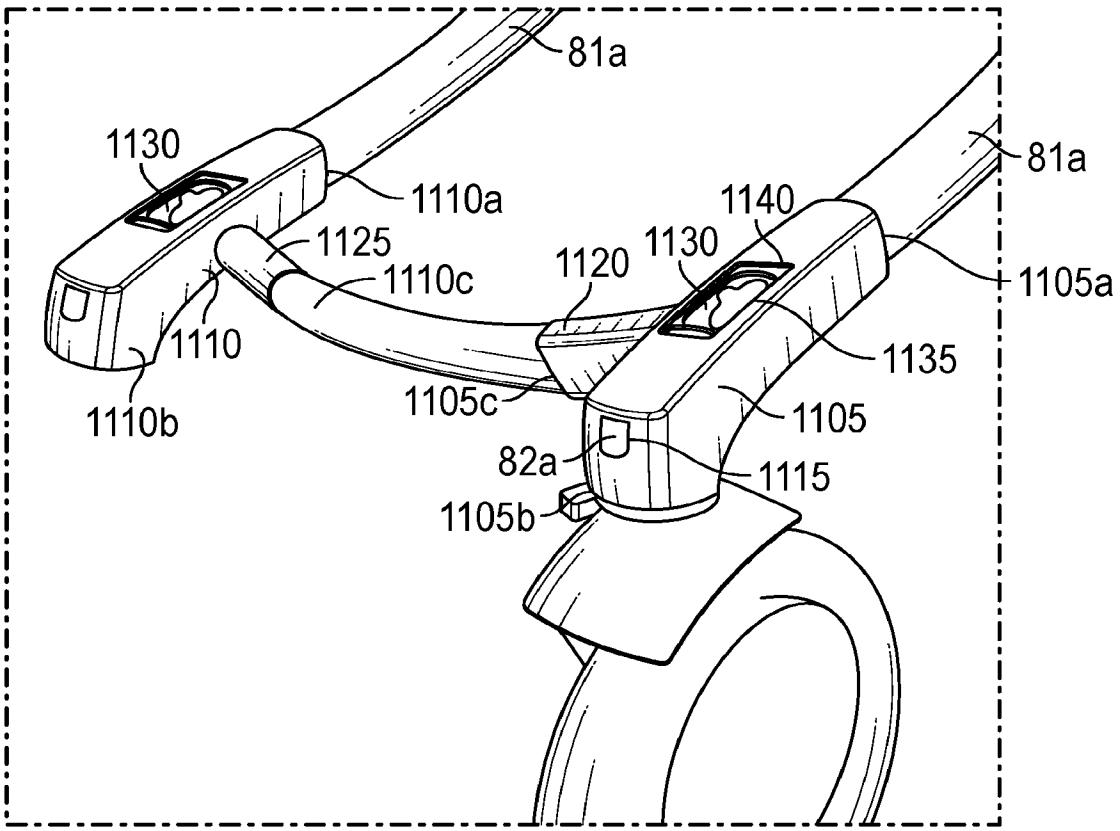
81a
1130
1110a
1125
1110c
1120
1130
1140
81a
1105a
1110
1135
1110b
1105c
1105
82a
1115
1105b

FIG. 11

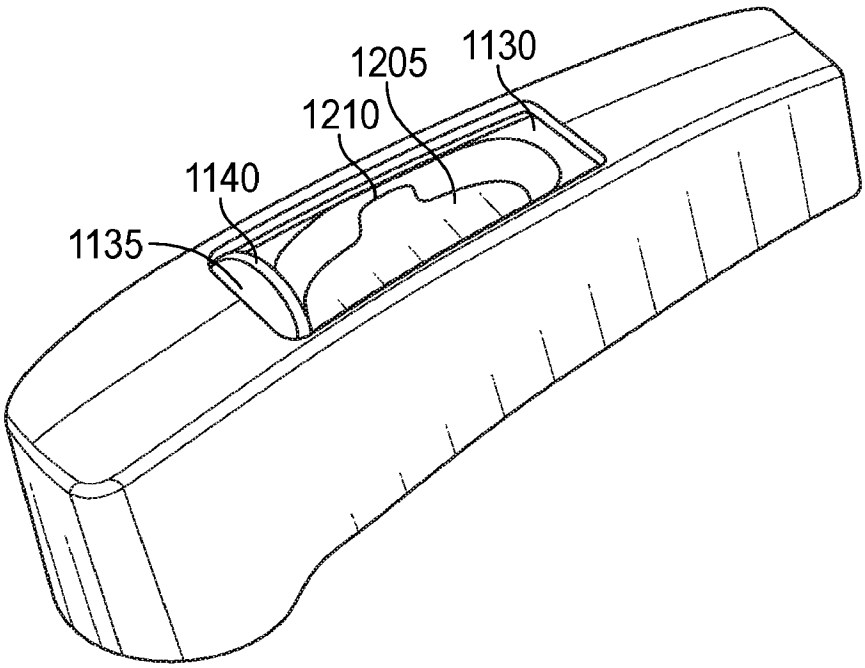

FIG. 12

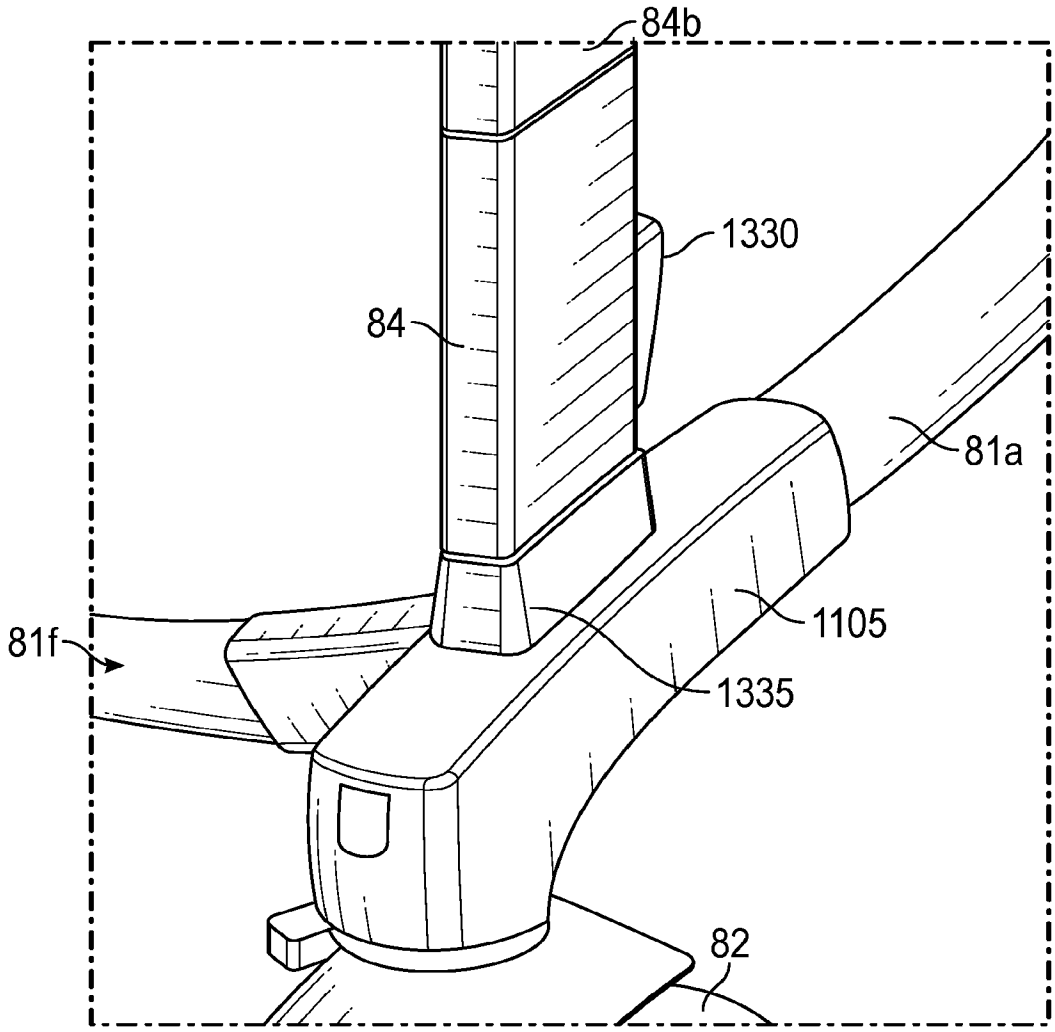

FIG. 13A

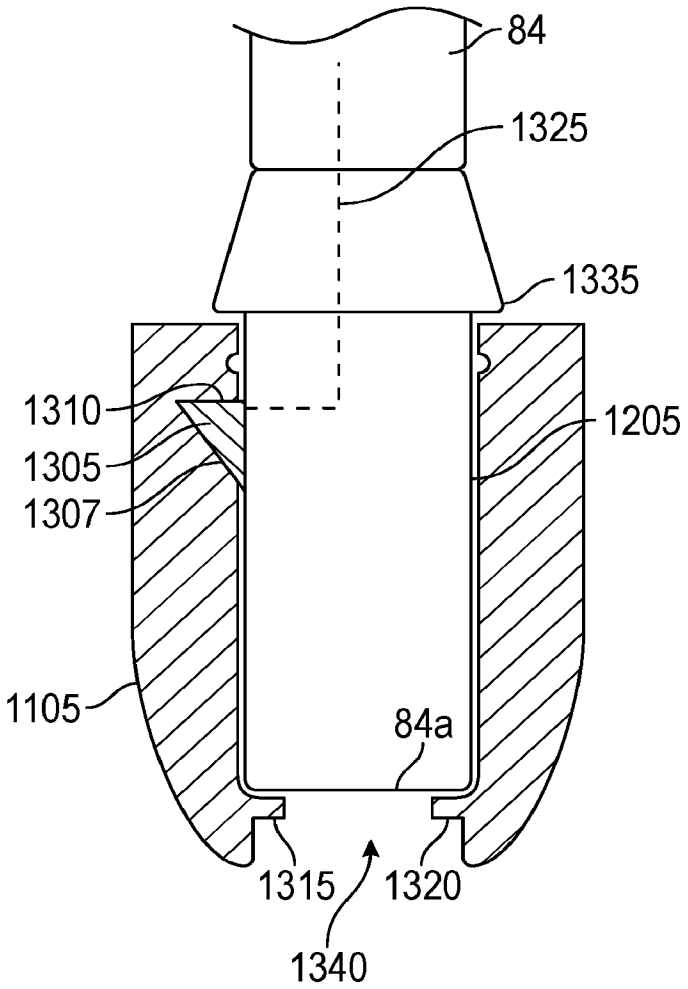

FIG. 13B

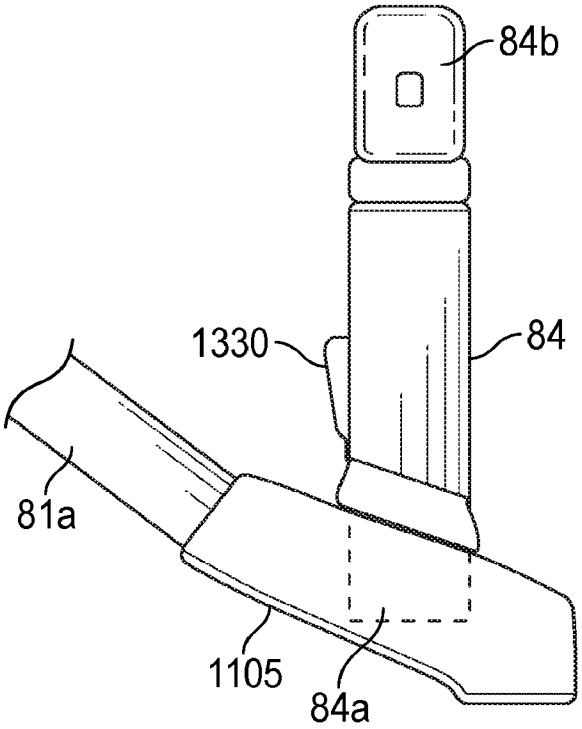

FIG. 13C

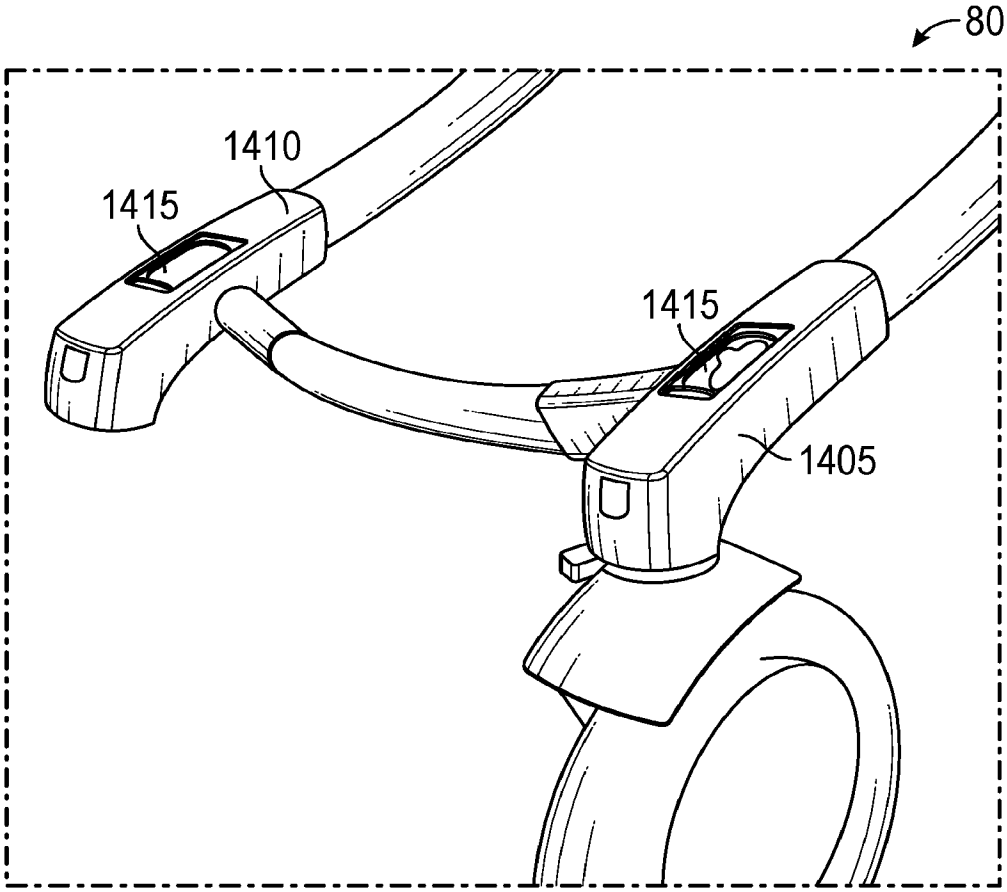

FIG. 14A

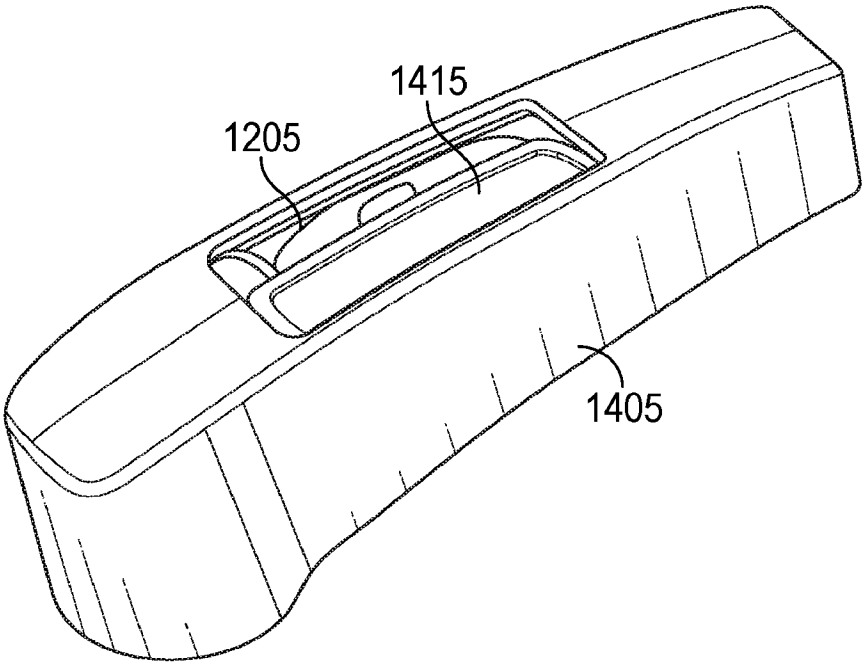

FIG. 14B

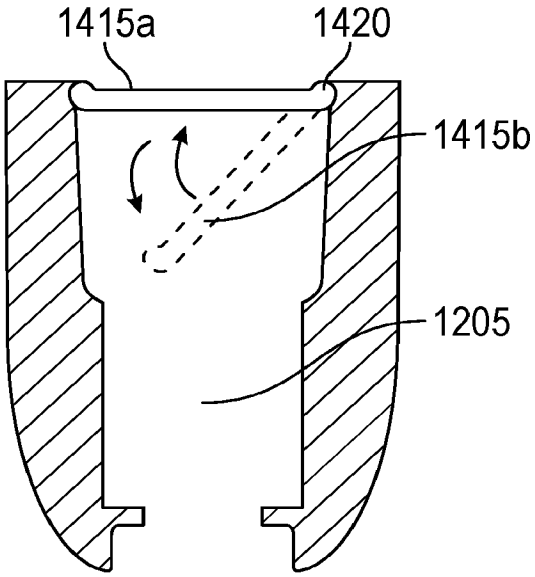

FIG. 14C