US007641216B2

(12) **United States Patent**
Cone, II

(10) **Patent No.: US 7,641,216 B2**
(45) **Date of Patent: Jan. 5, 2010**

(54) **FLAT FOLD STROLLER**

(75) Inventor: **Richard E. Cone, II**, Athens, OH (US)

(73) Assignee: **Dick Cone Industrial Design, Inc.**, Athens, OH (US)

(*) Notice: Subject to any disclaimer, the term of this patent is extended or adjusted under 35 U.S.C. 154(b) by 403 days.

(21) Appl. No.: **11/682,018**

(22) Filed: **Mar. 5, 2007**

(65) **Prior Publication Data**

US 2008/0217966 A1 Sep. 11, 2008

(51) **Int. Cl.**
B62B 3/02 (2006.01)

(52) **U.S. Cl.** **280/642**; 280/42; 280/647; 280/649; 280/650; 280/641; 280/646

(58) **Field of Classification Search** 280/642, 280/638, 38, 42, 647, 649, 650, 657, 658, 280/641, 646; 297/16.2, 56
See application file for complete search history.

(56) **References Cited**

U.S. PATENT DOCUMENTS

2,803,470	A	8/1957	Welsh	
3,736,021	A	5/1973	MacLaren	
3,836,164	A *	9/1974	Sugino et al.	280/642
3,873,117	A	3/1975	Perego	
3,954,068	A	5/1976	Roberts et al.	
4,369,986	A	1/1983	de la Fé	
4,378,946	A	4/1983	Voytko et al.	
4,412,688	A	11/1983	Giordani	
4,606,550	A	8/1986	Cone	
4,762,335	A *	8/1988	Kassai	280/649
4,848,787	A	7/1989	Kassai	
5,087,066	A	2/1992	Mong-Hsing	
5,257,799	A	11/1993	Cone et al.	
5,522,614	A	6/1996	Eyman et al.	
5,553,885	A	9/1996	Chang	
5,718,444	A	2/1998	Huang	
5,755,455	A *	5/1998	Chen et al.	280/642
6,068,284	A	5/2000	Kakuda	
6,095,548	A	8/2000	Baechler	
6,375,213	B1 *	4/2002	Suzuki	280/649
6,428,034	B1	8/2002	Bost	
6,581,957	B1	6/2003	Lan	
6,698,788	B2	3/2004	Yang	

(Continued)

FOREIGN PATENT DOCUMENTS

WO WO 2006/079012 A1 7/2006

OTHER PUBLICATIONS

U.S. Appl. No. 12/028,418, filed Feb. 8, 2008, Cone.

Primary Examiner—Lesley D Morris
Assistant Examiner—Bryan A Evans
(74) *Attorney, Agent, or Firm*—Oblon, Spivak, McClelland, Maier & Neustadt, L.L.P.

(57) **ABSTRACT**

A folding chair includes handle frames, and front legs and rear legs configured to support the chair in an upright position. The front legs are pivotally attached to respective rear legs. A chair portion, includes a back rest, a seat and a leg rest pivotally attached to the seat. Pivot frames are pivotally attached to respective handle frames, the back rest and the rear legs. Sliders are pivotally attached to respective pivot frames, the back rest, respective arm rests and the seat and are configured to slide along the front legs.

5 Claims, 12 Drawing Sheets

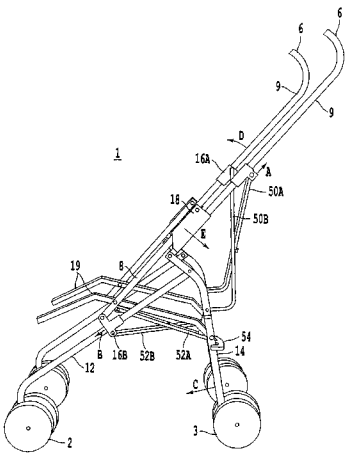

U.S. PATENT DOCUMENTS

6,964,429 B2 11/2005 Suga et al.
7,044,497 B2 5/2006 Hartenstine et al.
7,077,423 B2 * 7/2006 Hutchinson 280/649
2006/0006629 A1 1/2006 Riedl et al.
2006/0237930 A1 10/2006 Logger

* cited by examiner

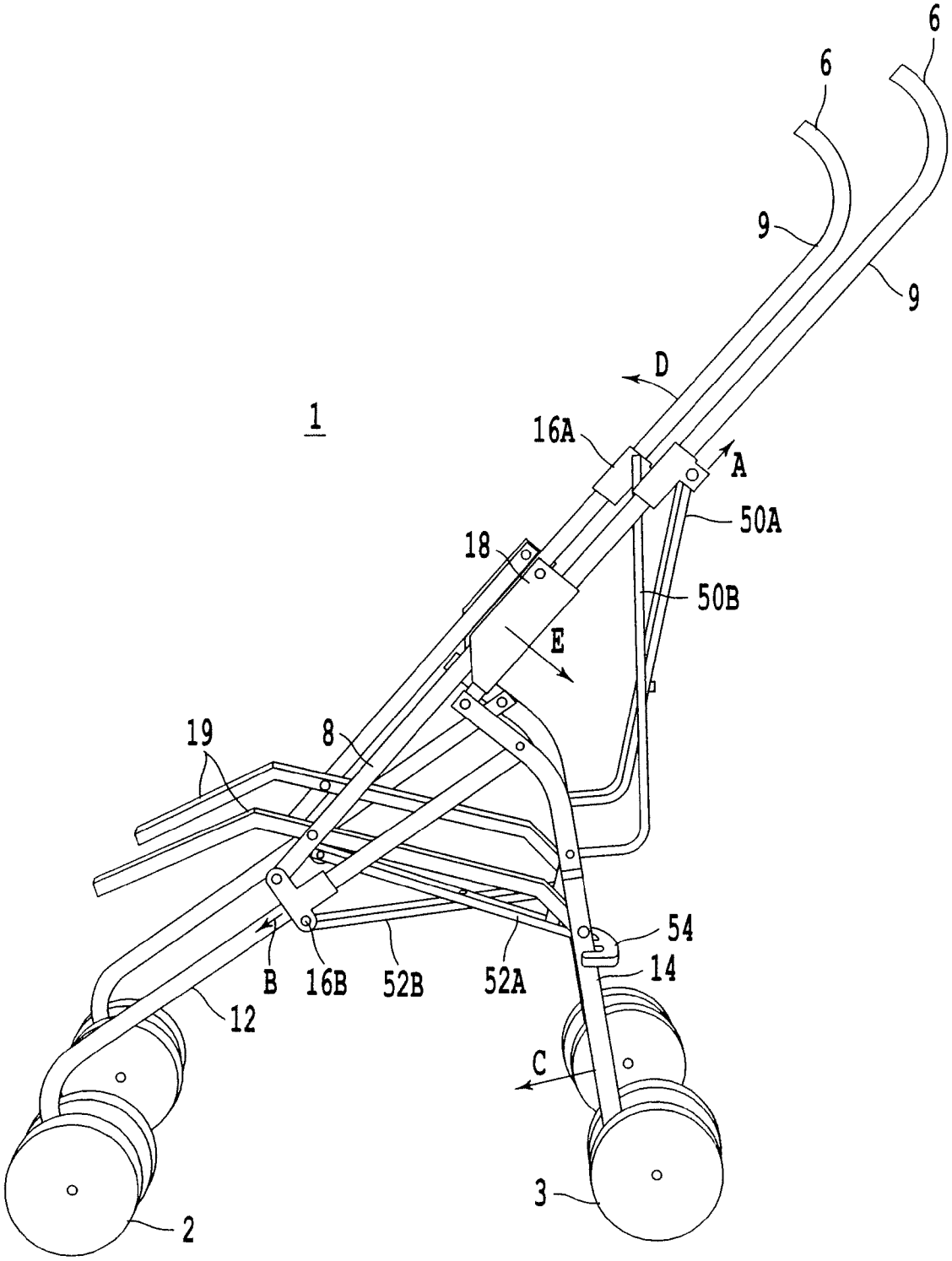

Fig. 1

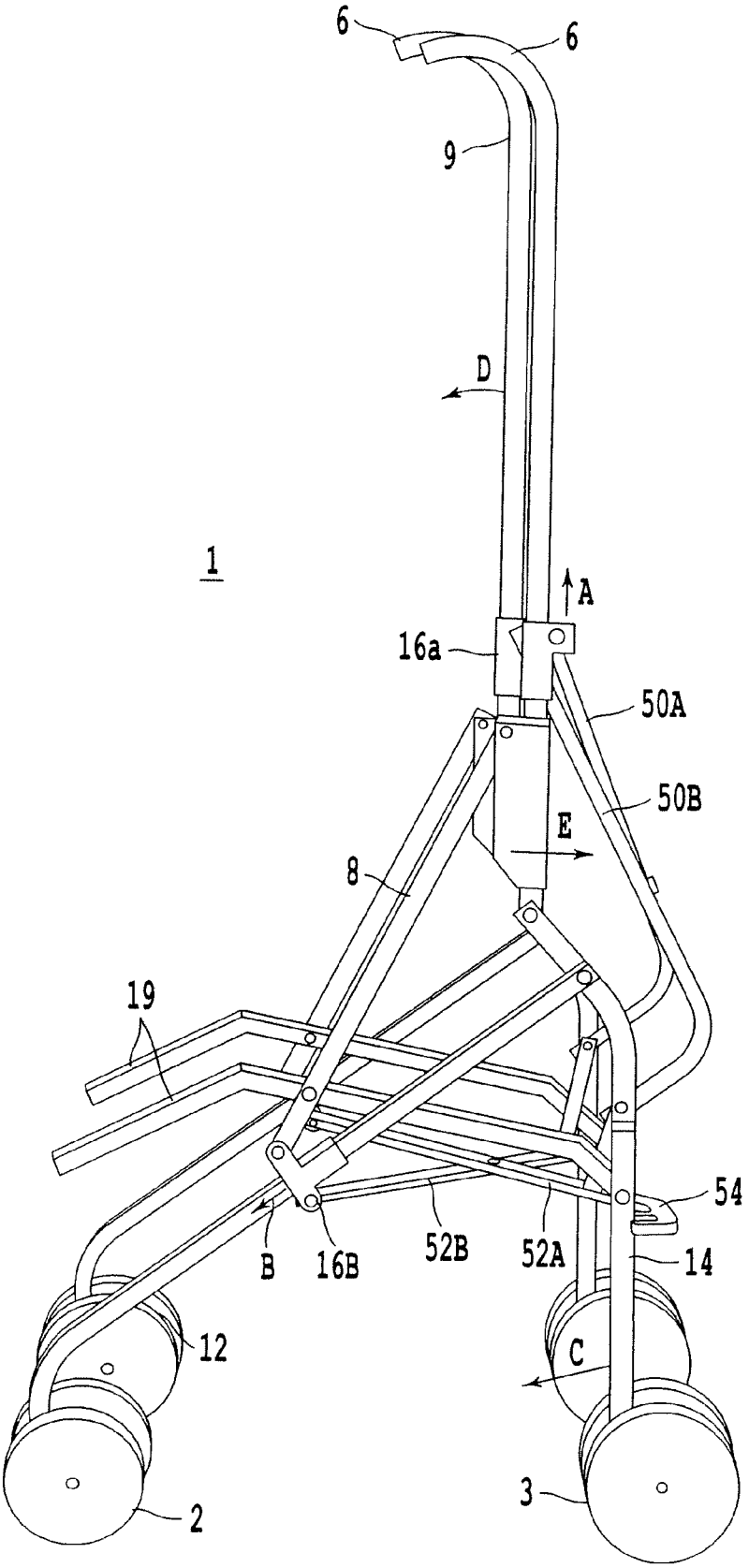

Fig. 2

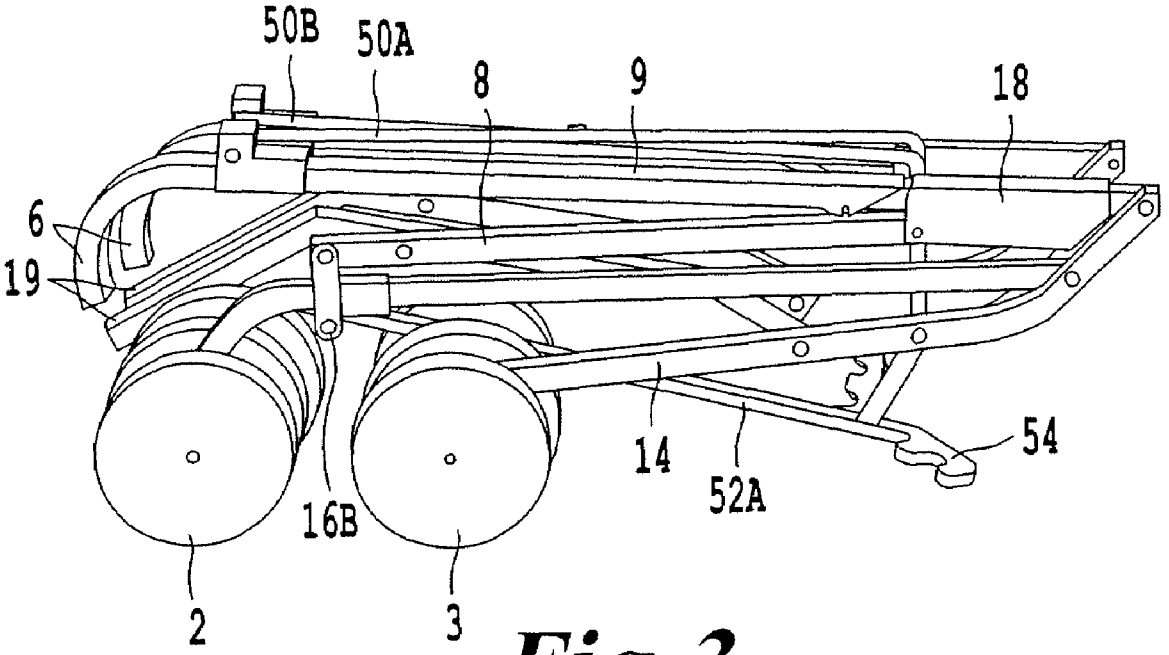

Fig.3

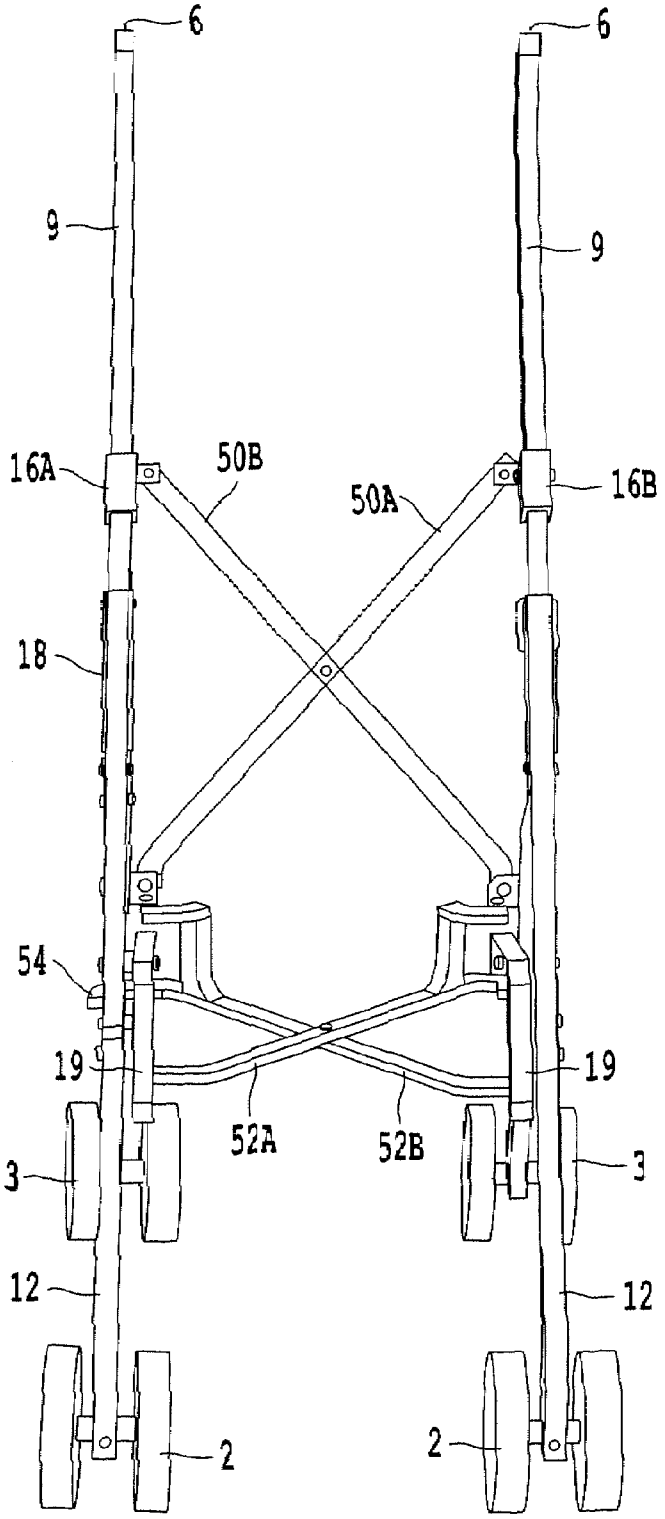

Fig. 4

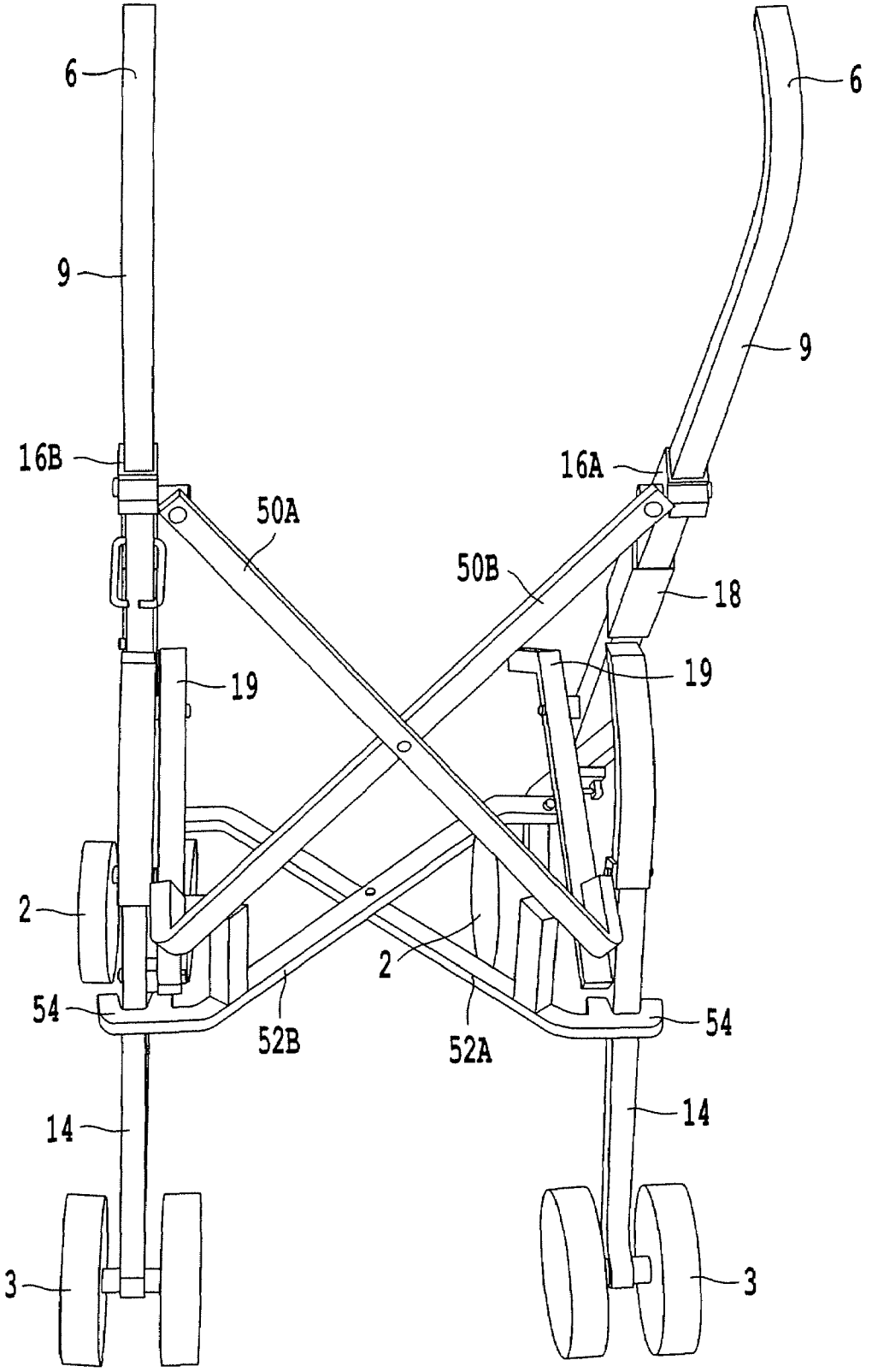

Fig.5

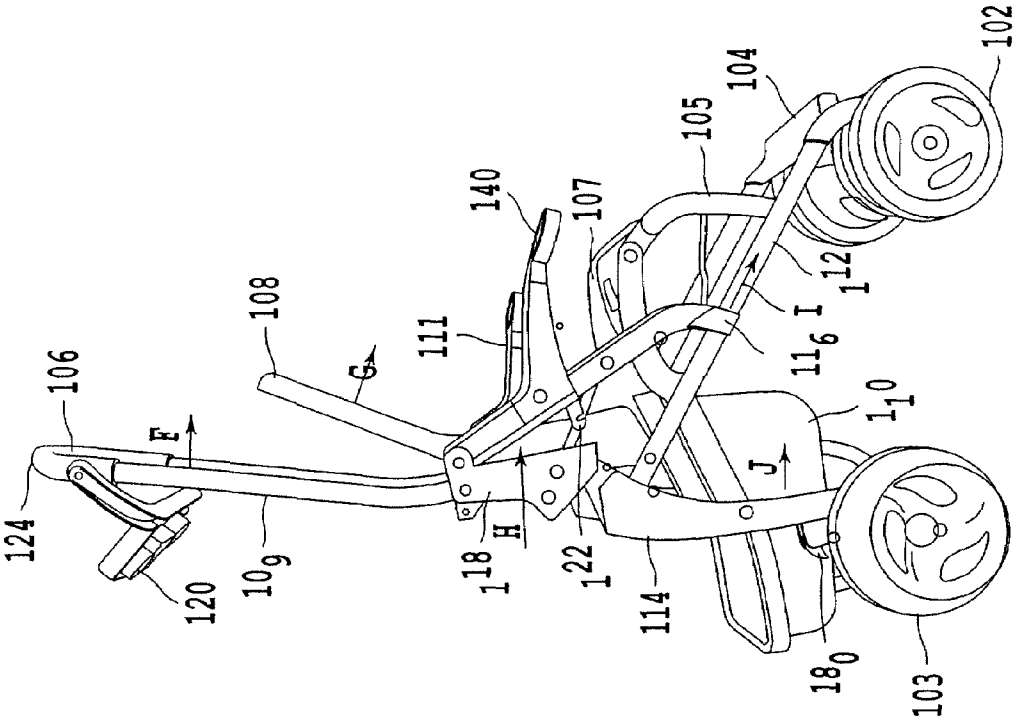
102
104
105
140
107
108
111
106
124
120
10_9
1_{18}
1_{22}
114
18_0
103
1_{10}
11_6
1_{12}
F
G
H
I
J

Fig. 7

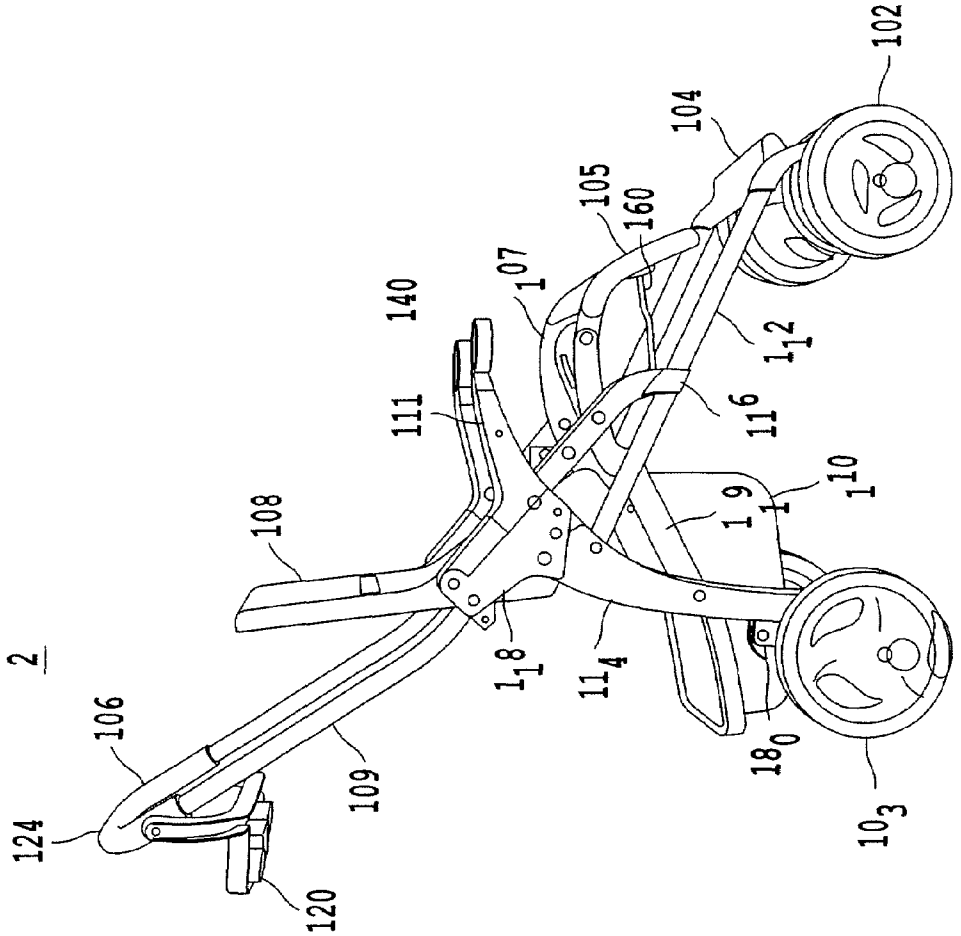
2
102
104
105
160
1_{07}
140
111
108
106
124
120
109
1_{18}
11_4
18_0
10_3
1_{10}
1_9
11_6
1_{12}

Fig. 6

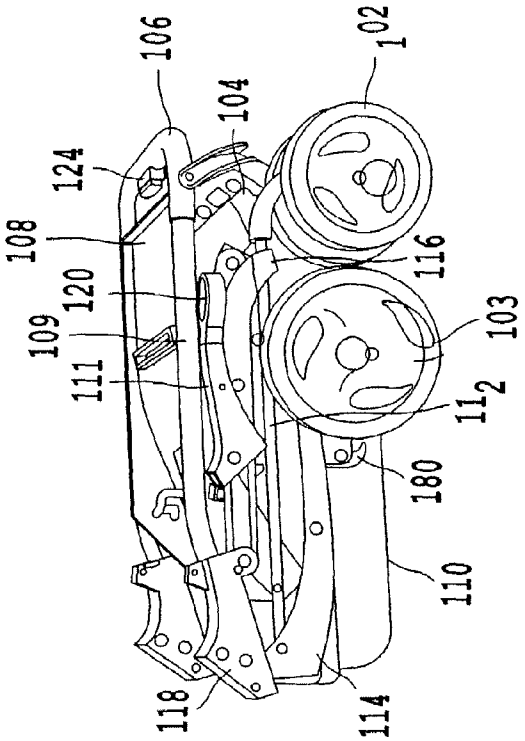
124
106
104
102
108
120
109
111
116
103
112
180
110
118
114

Fig. 9

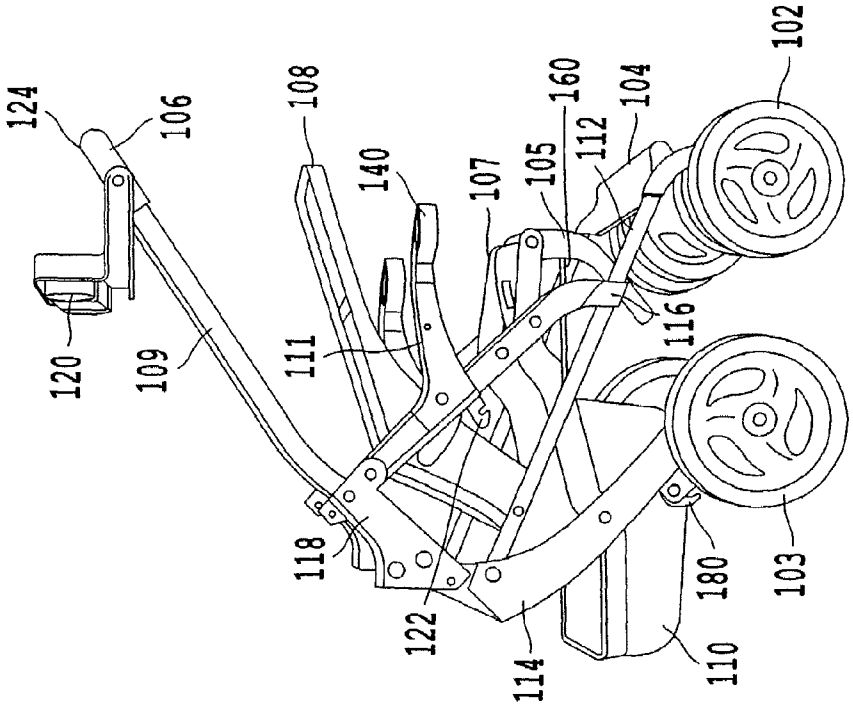
124
106
108
140
107
105
160
112
104
102
120
109
111
116
118
122
114
110
180
103

Fig. 8

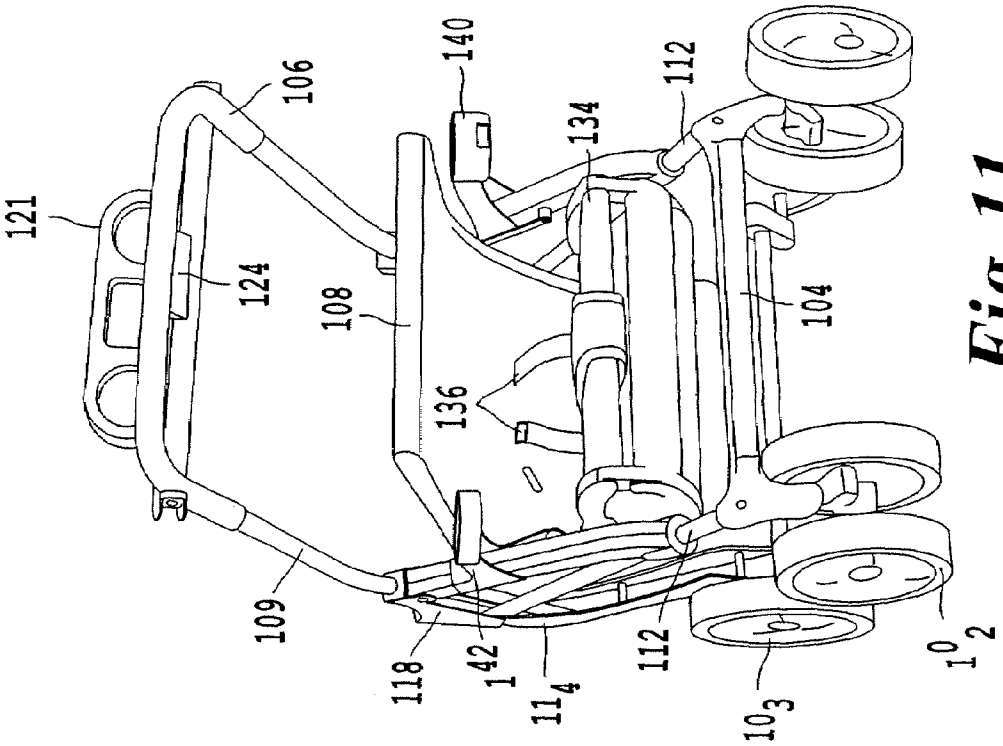
121
106
140
112
134
124
108
104
136
109
118
142
114
112
103
102

Fig. 11

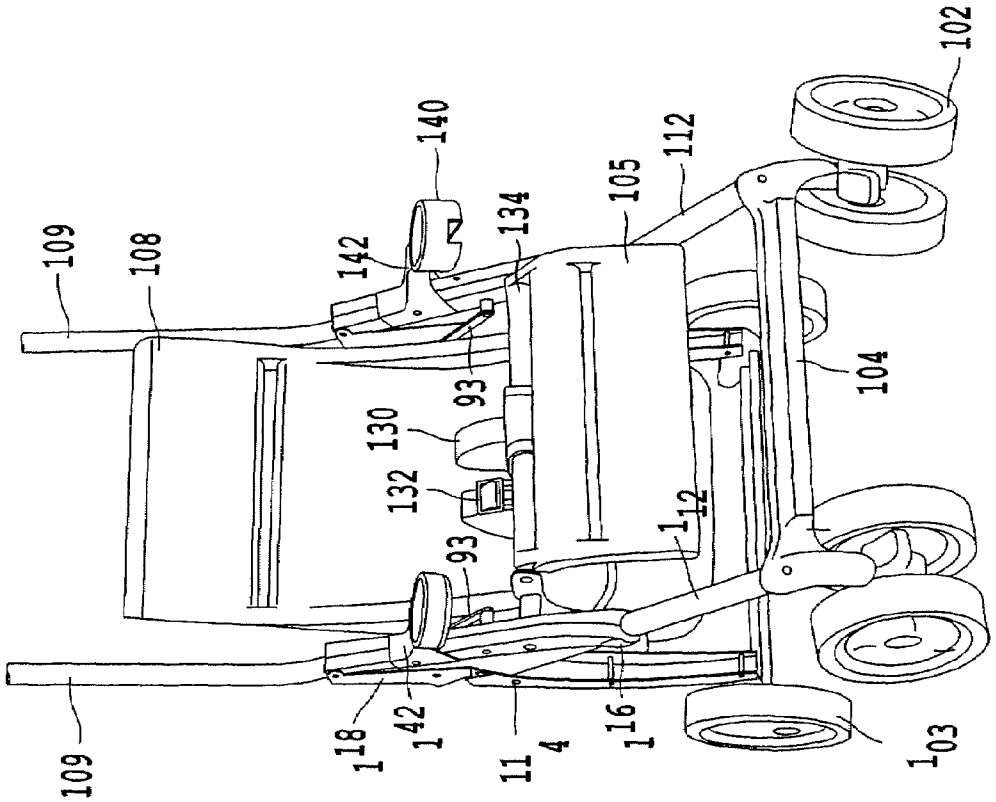
109
108
140
142
134
105
112
102
93
130
132
93
112
104
109
118
142
114
116
103

Fig. 10

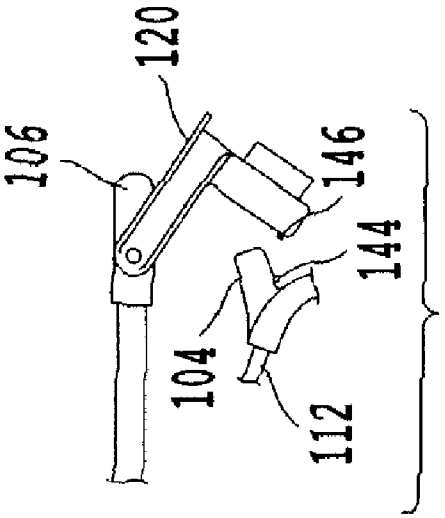

Fig. 13

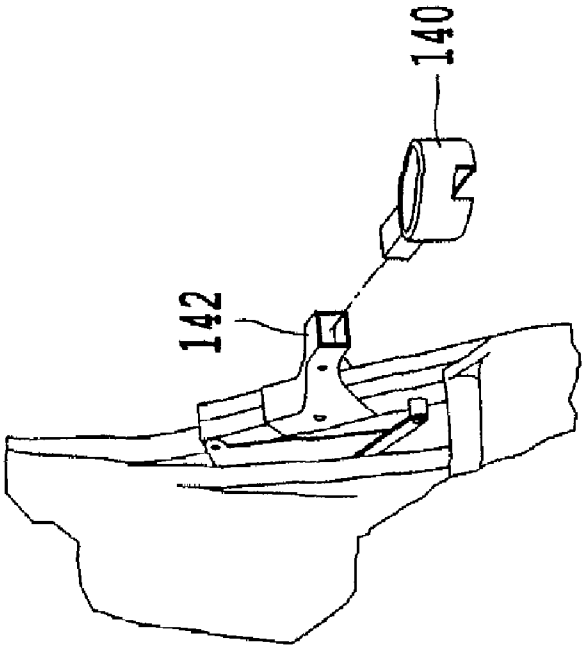

Fig. 12

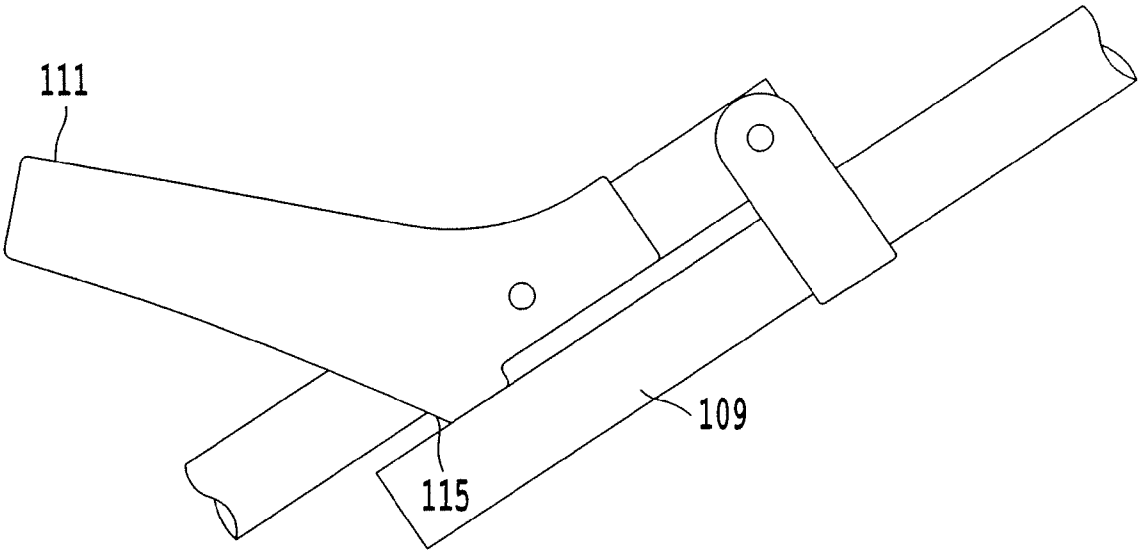

Fig. 14A

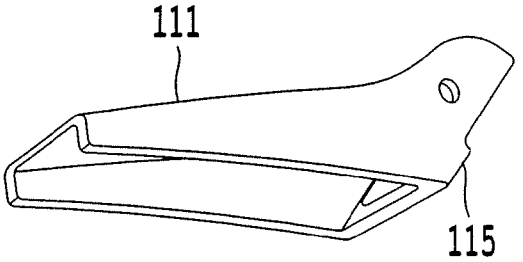

Fig. 14B

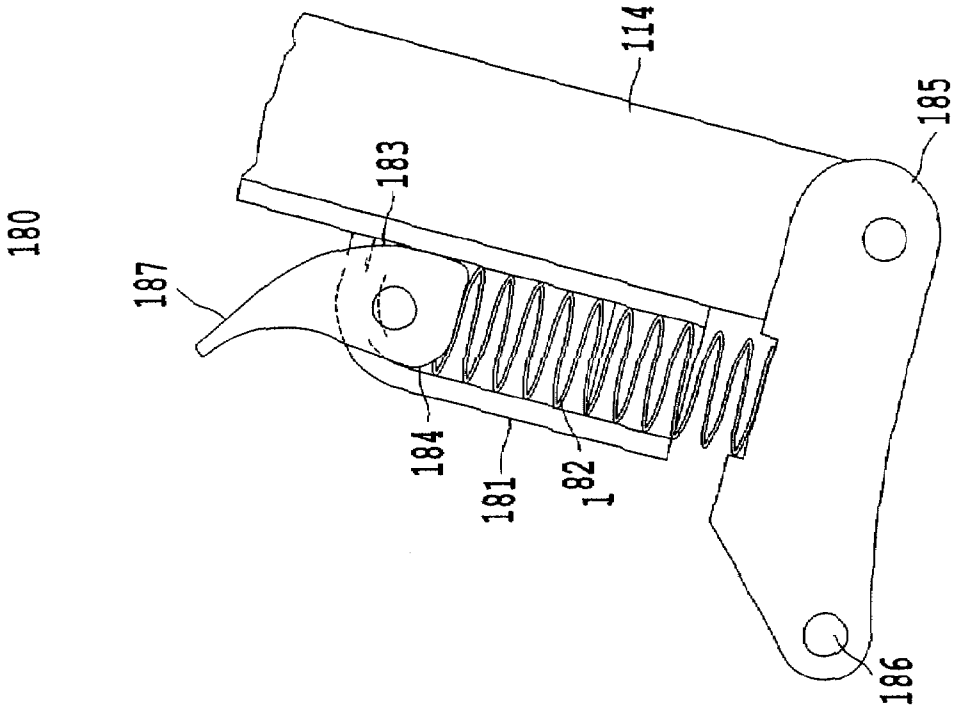

Fig. 15B

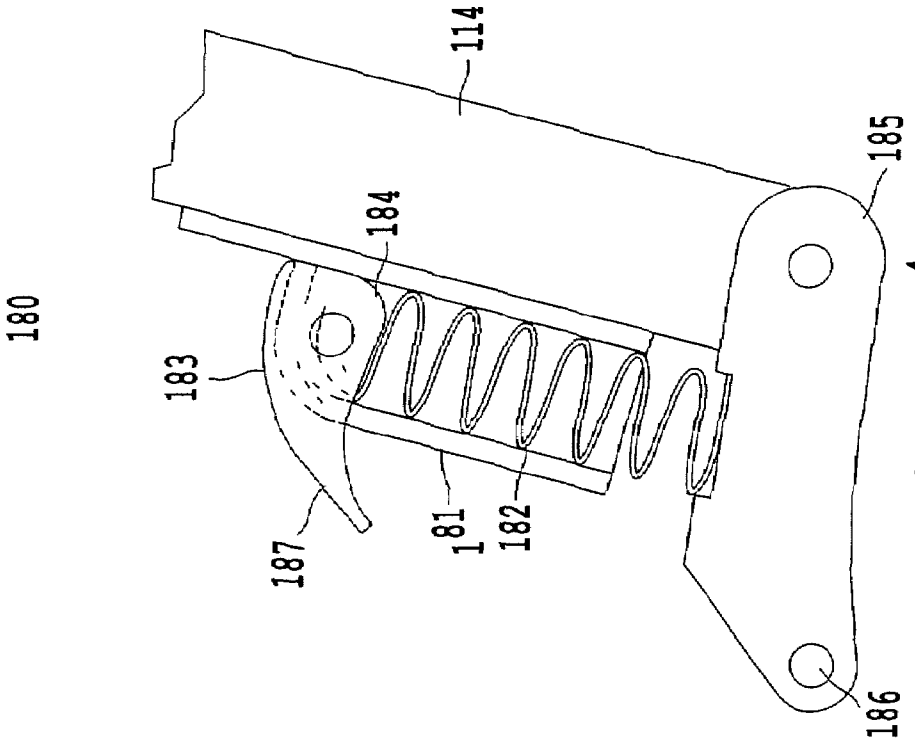

Fig. 15A

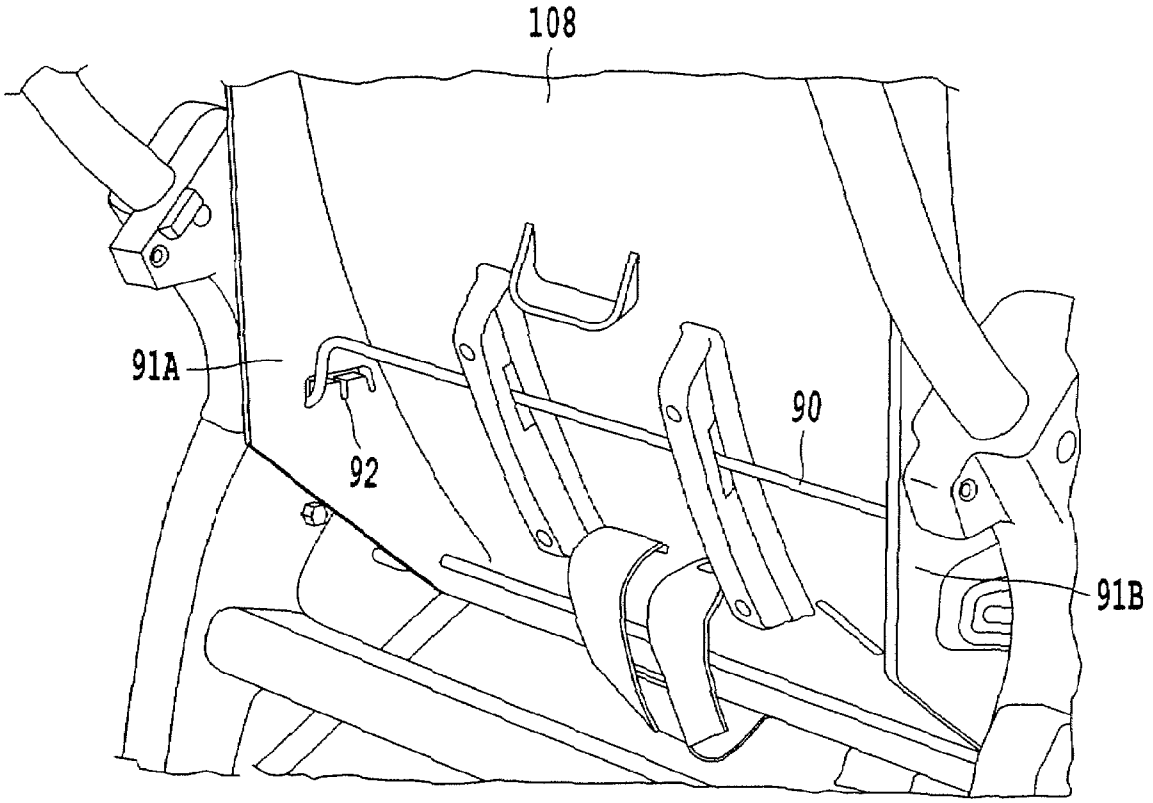

Fig. 16

FLAT FOLD STROLLER

BACKGROUND

1. Field of Invention

Exemplary embodiments of this invention relate to folding strollers which when in a folded state occupy a small volume of space and allow for easy transport and storage.

2. Description of Related Art

Related art folding strollers have been developed to increase portability by reducing a volume of space occupied by the stroller when in its folded state. Reducing the volume of space occupied by the stroller in a folded state allows the stroller to be more easily handled by a user, decreases the amount of space required for storage when not in use and allows for easy transportability by allowing the folded stroller to be easily placed in the trunk of a car, for example. Reduced volume also decreases shipping costs, in an era when manufacturing facilities are located globally and individuals utilize the internet to purchase goods.

Related art folding strollers may have a problem that the length of the stroller in its folded state is the same or even greater than when in its unfolded state. Because it is desirable to enhance portability, allow easier handling and reduce the volume of space occupied by a stroller when in its folded state exemplary aspects of this invention provide a flat folding stroller that addresses these and/or other requirements

A related art stroller, known popularly as the MacLaren stroller and disclosed in U.S. Pat. No. 3,736,021 includes upper and lower X-shaped frame members which allow substantially identical side and leg members to be collapsed to reduce the stroller's width. However, when in a folded state, the length of the stroller increases when the front wheel assembly is pivoted in a direction away from the rear wheels. Also, because the handle portion is pivoted towards the front wheels and extends past the front wheels, the length is extended even more. This increased length in the folded state makes it difficult to store, handle and transport the stroller. Additionally, the overall cost of the product may be increased due to increased shipping costs.

SUMMARY

Exemplary aspects of this invention provide apparatus and methods that provide a stroller with enhanced portability, that occupies a small volume of space when in a folded state and that is easily handled by a user.

A stroller according to an exemplary aspect of this invention includes two front legs and two rear legs that support the stroller in an upright position, two handle frames and two first upper sliders that slide along respective handle frames. An upper X frame includes two upper frame members that are pivotally connected to each other at respective intermediate portions. Each upper frame member is pivotally connected to respective first upper sliders and to respective rear legs. Two second lower sliders slide along respective front legs. A lower X frame member includes two lower frame members pivotally connected to each other at respective intermediate portions. Each lower frame member is pivotally connected to respective second lower sliders and attached to respective rear legs. Two pivot frames are linked to respective second sliders and pivotally attached to respective rear legs. A pair of wheels are rotationally attached to the front legs, and a pair of wheels are rotationally attached to the rear legs.

A stroller according to an exemplary aspect of this invention includes lower frame members with engaging portions

that engage a respective rear leg to reduce the likelihood or prevent the stroller from folding and to provide lateral rigidity.

A stroller according to an exemplary aspect of this invention includes two back frames, two lateral portions rotationally attached to respective back frames and to respective lower legs, and a seat portion supported by the back frames and the lateral portions.

Exemplary aspects of this invention provide a stroller including two handle frames, two front legs and two rear legs that support the stroller in an upright position. Front legs are pivotally attached to respective rear legs. A chair portion, includes a back rest, a seat and a leg rest pivotally attached to the seat. Two pivot frames are pivotally attached to respective handle frames. The back rest and the rear legs, two arm rests and two sliders are pivotally attached to respective pivot frames. The back rest, respective arm rests and the seat slide along the respective front legs. Wheels are rotationally attached to the front legs and the rear legs.

Exemplary aspects of this invention provide a stroller including a pre-load mechanism with a suspension pivotally attached to at least one of the front and rear legs and supporting an axle of a wheel. A resilient member, such as a spring, is attached at one end of the suspension, and a cam is attached to another end of the resilient member and pivots to compress the resilient member.

Exemplary aspects of this invention provide a lock release mechanism configured to retain the stroller in a rigid unfolded state when locked and allow the stroller to be collapsed when released. The lock release mechanism may include a two step release mechanism.

Exemplary aspects of this invention provide a stroller including arm rests with an attachment portion to allow an item to be attached to the arm rests. The attachment portion may include for example, one of a slot or tab and an item to be attached may include the other of a slot or a tab. The item to be attached may be a cup holder, a tray and/or a toy or any other suitable item.

Exemplary aspects of this invention include a pivot lock pivotally connected to a handle portion and a pivot lock lip, and a lip portion that engages with the pivot lock lip to maintain the stroller in a folded state. The pivot lock may be a tray including a tray portion and arm portions and the lip portion may be located on a foot rest.

Exemplary aspects of this invention may include a seat belt tensioner for a seat belt, wherein a back rest includes throughholes through which a seat belt is passed. The belt is retained by a locking portion at one end and another end of the seat belt is attached to an underside of the seat. When the folding chair is in a folded state, the locking portion is pulled toward the back rest.

Exemplary aspects of this invention include a back rest with an adjustable incline so that when the folding chair is folded and unfolded the back rest is retained at its adjusted incline.

Exemplary aspects of the invention provide a method of folding a stroller including two front legs and two rear legs that support the stroller in an upright position, two handle frames, and two first upper sliders that slide along respective handle frames, an upper X frame including two upper frame members pivotally connected to each other at respective intermediate portions, each upper frame member pivotally connected to respective first upper sliders and to respective rear legs, two second lower sliders that slide along respective front legs, a lower X frame member including two lower frame members pivotally connected to each other at respective intermediate portions, each lower frame member pivotally con-

nected to respective second lower sliders and attached to respective rear legs, and two pivot frames linked to respective second sliders and pivotally attached to respective rear legs. The method includes detaching the two lower frame members from respective rear legs. A top portion of the handle frames is pivoted toward the front of the stroller. First upper sliders slide upward along respective handle frames and second lower sliders slide downward along respective front legs so that handle frames, front legs and rear legs become substantially parallel. The upper frame member and the lower frame members are collapsed about the respective intermediate pivot points so that the two handle frames move toward each other, the two front legs move toward each other and the two rear legs move toward each other.

Exemplary aspects of the invention provide a method of folding a stroller including two handle frames, two front legs and two rear legs configured to support the stroller in an upright position, the front legs pivotally attached to respective rear legs, a chair portion, including a back rest, a seat and a leg rest pivotally attached to the seat, two pivot frames pivotally attached to respective handle frames, the back rest and the rear legs, two arm rests, and two sliders pivotally attached to respective pivot frames, the back rest, respective arm rests and the seat and configured to slide along the respective front legs. The method includes pivoting a top portion of the handle frames toward a front of the chair. The handle frames are pivoted toward the front of the chair. The sliders slide downward along the leg. The rear legs are pivoted toward the front legs. The backrest is pivoted toward the front of the chair and the leg rests toward a rear of the chair. The handle frames, the slider, the front and rear legs, the backrest and the leg rest become substantially parallel in their length directions.

BRIEF DESCRIPTION OF THE DRAWINGS

Various example embodiments of the invention will be described in detail, with reference to the following figures, wherein:

FIG. **1** is schematic side view of a first example embodiment of a stroller in a completely unfolded state;

FIG. **2** is a schematic side view of the first example embodiment of the stroller of FIG. **1** when beginning to be placed in a folded state;

FIG. **3** is a schematic side view of the first example embodiment of the stroller of FIG. **1** in a folded state;

FIG. **4** is a schematic front view of the first example embodiment of the stroller of FIG. **1** in a completely unfolded state;

FIG. **5** is a schematic rear view of the first example embodiment of the stroller of FIG. **1** in a completely unfolded state;

FIG. **6** is a schematic side view of a second example embodiment of a stroller in a completely unfolded state;

FIG. **7** is a schematic side view of the second example embodiment of the stroller of FIG. **6** when beginning to be placed in a folded state;

FIG. **8** is a schematic side view of the second example embodiment of the stroller of FIG. **6** in a partially folded state;

FIG. **9** is a schematic side view of a second example embodiment of the stroller of FIG. **6** in a completely folded state;

FIG. **10** is a schematic front view of the second example embodiment of the stroller of FIG. **6** in an unfolded state;

FIG. **11** is a schematic front view of the second example embodiment of the stroller of FIG. **6** when beginning to be placed in a folded state;

FIG. **12** is a schematic detail of an arm rest according to an example embodiment of the invention including an attachment portion;

FIG. **13** is a schematic of a pivot lock according to an exemplary embodiment of the invention;

FIGS. **14**A and **14**B are schematics of an arm rest including an abutment portion according to an exemplary embodiment of the invention;

FIGS. **15**A and **15**B are schematics of a pre-load mechanism according to an example embodiment of the invention; and

FIG. **16** is a schematic of a rigid memory back according to an example embodiment of the invention.

DETAILED DESCRIPTION OF THE EXEMPLARY EMBODIMENTS

FIG. **1** illustrates a side view of a first example embodiment of a stroller in a completely unfolded state. For purposes of clarity to show the elements of the stroller, the sling seat portion of the stroller is not shown in FIGS. **1**-**4**. It should be appreciated by one of ordinary skill that in the following description some components of the stroller are provided in pairs and are identically situated on each side of the stroller. One of ordinary skill should appreciate that although the figures and following description are directed to a stroller the features of the example embodiments may be utilized in any folding chair.

Stroller **1** includes a handle portion **6** located at an end of a handle frame **9**. At an end of handle frame **9** opposite from the handle **6**, pivot frame **18** is rigidly attached. A portion of handle frame **9** protrudes past pivot frame **18** and is pivotally connected to an end of rear leg **14**. An end of rear leg **14**, opposite to the end pivotally connected to handle frame **9** has rear wheels **3** rotationally attached. An intermediate portion of rear leg **14** is pivotally attached to one end of front leg **12**. An end of front leg **12**, opposite to the end pivotally attached to rear leg **14** has front wheels **2** rotationally attached.

Stroller **1** includes sliders **16**A, **16**B. Slider **16**A is slidably attached to handle frame **9**. According to an example embodiment, slider **16**A has a cylindrical opening through which handle frame **9** is inserted so as to be surrounded by slider **16**A. One of ordinary skill would readily appreciate that slider **16**A may be configured in any suitable manner to slide or move relative to handle frame **9**. In a non-limiting example, handle frame **9** may be configured with a groove while slider **16**A is configured with a slot or pin that slides within the groove of handle frame **9**.

Slider **16**A is pivotally attached to one end of frame members **50**A, **50**B of upper X frame **50**. Frame members **50**A and **50**B are pivotally attached to each other at an intermediate connection point to form a substantially X shaped frame when the stroller is in a completely unfolded state. The end of frame members **50**A, **50**B, opposite to the end pivotally attached to respective slider **16**A, is pivotally attached to an intermediate portion of respective rear leg **14**.

Slider **16**B is slidably attached to front leg **12**. According to an example embodiment, slider **16**B has a cylindrical opening through which front leg **12** is inserted so as to be surrounded by slider **16**B. As discussed with reference to slider **16**A above, one of ordinary skill would readily appreciate that slider **16**B may be configured in any suitable manner to slide or move relative to front leg **12**.

Slider **16**B is pivotally connected to one end of side frame **8**. An end of side frame **8**, opposite to the end connected to slider **16**B, is pivotally attached to pivot frame **18**. Sling seat (not shown) may be attached to a slider **16**A and **16**B. An

intermediate portion of side frame **8** is pivotally connected to lateral portion **19**. Lateral portion **19** provides support for a seat portion of a seat disposed on stroller **1**. Slider **16**B is pivotally connected to one end of frame members **52**A, **52**B of lower X frame member. Frame members **52**A and **52**B are pivotally attached to each other at an intermediate connecting portion to form a substantially X shape when in a completely unfolded state. The end of each frame member **52**A, **52**B opposite to the end pivotally connected to slider **16**B is attached to an intermediate portion of rear leg **14**, by leg support **54**. In a non-limiting example, leg support **54** has grooves which in the completely unfolded state of stroller **1** retain rear leg **14**. One of ordinary skill would readily appreciate the leg support **54** may have multiple configurations so long as leg support **54** may be attached to rear leg **14** to maintain stroller **1** in a rigid state and to prevent the stroller from inadvertently moving to a folded state.

An operation to fold stroller **1** will be described with reference to FIGS. **1** and **2**. Handle frame **9** is pivoted in a direction as shown by arrow D. By pivoting handle frame **9**, pivot frame **18** rotates at its pivot point in a direction as shown by arrow E. Through its connection to pivot frame **18**, rear leg **14** pivots in a direction toward front wheels **2**, as shown by arrow C. As rear legs **14** pivot, leg support **54** is allowed to disengage from rear legs **14**. Leg support **54**, when engaged with rear legs **14** prevents frame members **52**A, **52**B from being collapsed toward each other. When leg support **54** is disengaged from rear leg **14**, frame members **52**A, **52**B may be collapsed toward each other around their intermediate connection point so that they move toward being substantially parallel. As frame members **52**A and **52**B collapse toward each other, the first and second halves of the stroller move toward each other to narrow the width of the stroller.

As handle frame **9** is pivoted in a direction shown by arrow D, slider **16**A travels toward handle **6**. Frame members **50**A and **50**B, pivotally attached to slider **16**A, collapse toward each other around their intermediate connection point so they move toward being substantially parallel. As pivot frame **18** pivots, slider **16**B is pushed along front legs **12** toward front wheels **2**, through side frame **8** as shown by arrow B. As slider **16**B moves toward front wheels **2**, frame members **52**A and **52**B are collapsed toward each other through their respective pivotal connection to slider **16**B.

In a completely folded state, as shown in FIG. **3**, rear wheels **3** move towards the front wheels **2** and are not located on opposites sides of the length of the stroller as in the related art described above. Frame members **50**A, **50**B are collapsed toward each other to reduce the width of the stroller **1**. Front leg **12**, rear leg **14**, handle frame **9**, back frame **8** and lateral portion **19** become substantially parallel to provide a folded stroller **1** which occupies a small volume of space in a length as well as in a width direction.

FIG. **6** is a schematic side view of a second example embodiment of a stroller in a completely unfolded state. Stroller **2** includes a handle portion **106** located at an end of handle frame **109**. As shown in FIG. **13** pivot lock **120** is pivotally attached to handle portion **106**. According to an example embodiment, when stroller **2** is in the unfolded state, pivot lock **120** hangs with tray **121** in a substantially horizontal state. Tray **121** may be provided in the form of a storage place such as a cup holder. Pivot lock **120** includes pivot lock lip **146**. When stroller **2** is placed in a completely folded state, the pivot lock **120** is pivoted so that the pivot lock lip **146** engages with a corresponding lip **144** located on a lower lateral portion of foot rest **104**. By engaging pivot lock lip **146** with lip **144**, the stroller **2** may be prevented from becoming unfolded.

At an end of the handle frame **109** opposite from the handle **106**, pivot frame **118** is rigidly attached. Rear leg **114** is pivotally attached to pivot frame **118** at one end. At an opposite end of rear leg **114** rear wheels **103** are rotationally attached. Back rest **108** is pivotally attached to front leg **112**. Slider **116** is pivotally attached to pivot frame **118**. An intermediate portion of slider **116** is pivotally attached to seat **107**. An end of the slider **116** that is opposite to the end pivotally attached to the pivot frame **118** is slidably attached to front leg **112**. According to an example embodiment, slider **116** has a cylindrical opening which surrounds front leg **112** and slides over front leg **112**. However, one of ordinary skill would appreciate that slider **116** may have multiple configurations to slide relative to front leg **112**.

Seat **107** includes two parallel lateral portions **119**. One end of lateral portion **119** is pivotally attached to leg rest **105**. An intermediate portion of lateral portion **119** is pivotally connected to an intermediate portion of slider **116**. An end of lateral portion **119** opposite to the end attached to leg rest **105** is pivotally attached to an intermediate portion of rear leg **114**.

Front leg **112** is attached at one end to foot rest **104** and at an opposite end to rear leg **114** at an end of rear leg **114** that is opposite to the end that rear wheel **103** is attached to. The front wheels **102** may be rotationally attached to front leg **112**.

An operation to fold stroller **2** will be described with reference to FIGS. **7-9**. As shown in FIG. **9**, lock release **124** is located to be centered on the handle portion **106**. Lock release **124** includes a two step release mechanism. The first step, for example, a push button, allows the second step, for example, two spring loaded squeeze buttons, to be urged toward each other to release latch **122**. When latch **122** is released stroller **2** is able to be folded. It should be noted that a release mechanism is required under common safety standards. When latch **122** is in a latched position the stroller may maintain rigidity when in an unfolded state and accidental folding of the stroller when in use may be prevented.

Once the latch **122** has been released from a latched position, the stroller **2** may be folded. Handle frame **109** is pivoted toward the front of the stroller in a direction shown by arrow F in FIG. **7**. Handle frame **109** is rigidly connected to pivot frame **118**. Thus, pivot frame **118** will also pivot forward as a result of handle frame **109** being pivoted forward as shown by arrow H. As pivot frame **118** is pivoted forward, slider **116** is urged forward through its pivotal connection to pivot frame **118**. As shown by arrow I, slider **116** will slide forward along front leg **112**. Slider **116** is pivotally connected at an intermediate portion to lateral portion **119**, which in turn is pivotally connected to rear leg **114**. As slider **116** slides forward along front leg **112**, rear leg **114** is pulled forward, as shown by arrow J, via lateral portion **119**. Back rest **118**, which is pivotally connected to front leg **112** also pivots forward. Leg rest **105** is pivotally connected to wire link **160**. Wire link **160** is pivotally attached to front leg **112**.

As handle frame **109** continues to pivot forward, the slider **116** slides along the remaining length of front leg **112**. As shown in FIG. **9**, in a folded position, handle frame **109**, slider **116**, front leg **112**, lateral portion **119** and rear leg **114** are substantially parallel to each other along a length portion of each resulting in a folded chair that occupies a small volume of space, is easy to handle, transport and store.

As shown in FIG. **13** when stroller **2** is in a folded state, pivot lock **120** is pivoted around handle **106** so that pivot lock lip **146** engages with lip **144** located on foot rest **104**. As discussed above this prevents the stroller **2** from becoming unfolded.

Arm rest **111** is pivotally attached to slider **116** at one end. As slider **116** slides forward along front leg **112**, arm rest **111** pivots toward slider **116**. In a folded state arm rest **111** is substantially parallel with slider **116** along the length portion of each. At an end of arm rest **111** opposite the end pivotally attached to the slider, there may be provided an arm rest accessory **140** which may be detachable from arm rest **111**. The accessory may be attached to the arm rest **111** in any suitable manner. In an example embodiment shown in FIG. **12**, arm rest **111** is provided with a slot **142** through which arm rest accessory **140**, shown as a cup holder in FIG. **12** is attached. One of ordinary skill would recognize that arm rest accessory **140** may be configured in any suitable manner, such as for example, a tray provided with slots for each arm rest **111**. Arm rest **111** includes an abutment portion **115** which abuts against pivot frame **118** or in another example embodiment against handle frame **9**.

As shown in FIGS. **15**A and **15**B, a pre-load mechanism **180** may be provided to adjust the ride characteristics of the stroller depending upon the weight of the object or person placed upon the stroller or a desired comfort level. Pre-load mechanism **180** includes a casing **181** with a hollow interior. Resilient member **182** is mounted to be compressible within the casing **181** via cam **183** which includes an abutment surface **184** which abuts one end of resilient member **182**. Cam **183** has a pivot handle **187** which is used to pivot cam **183** to compress or decompress resilient member **182**. An end of resilient member **182**, opposite the end that abuts abutment surface **184** of cam **183** is fixed to an intermediate portion of suspension **185**. Suspension **185** is pivotally attached at substantially one end to rear leg **114** and at an opposite end to rear axle **186** which supports rear wheels **103**.

An operation of the pre-load mechanism **180** will now be described. In an unloaded state, resilient member **182** is not compressed by action of cam **183**. Forces operating on rear wheels **103** are transmitted via axle **186** to suspension **185** which pivots about its pivotal connection with rear leg **114**. Resilient member **182** applies a load to suspension **185** which absorbs the forces operating on rear wheels **103** so they are not transmitted to an occupant of the stroller **2** to cause an uncomfortable ride. As an occupant of stroller **2** becomes heavier, resilient member **182** in its uncompressed state may be inadequate to absorb the forces acting on rear wheels **103**. By lifting handle **187**, cam **183** pivots and abutment portion **184** compresses resilient member **182**. In a compressed state, resilient member **182** may absorb forces acting on rear wheels **103** for a heavier load.

Seat **107**, backrest **108** and leg rest **105** together provide the seat portion for an occupant of the stroller. Leg rest **105** is pivotally attached to seat **107**. Backrest **108** is pivotally attached to front leg **112**. Thus, the sitting position is configured in separate sections which may be foldable relative to each other.

Backrest **108** includes through-holes **136**. Because seat **107**, backrest **108** and leg rest **105** are configured in separate sections, gaps **134** are formed between each section. Belt **130** is provided to retain an occupant of stroller **2** for safety purposes. Belt **130** includes belt lock **132** to fix the belt to retain an occupant. Belt **130** passes to a rear side of backrest **108** via through-holes **136** and then is passed under the backrest **108** and fixed to an underside of seat **107**. As the stroller **2** is moved to a folded state, belt **130** is pulled taught by a movement of seat **107**. Belt **130** is pulled from the rear of through-holes **136**. Belt **130** is prevented from completely passing through through-holes **136** by belt lock **132**, which is made larger than the through-holes **136**. In a folded state, belt lock **132** is held against backrest **108** and prevented from falling between gaps **134**. If belt lock **132** falls into gaps **134** it could become damaged due to compression between the folded portions of the stroller.

Backrest **108** includes a rigid memory back feature which provides backrest **108** with a set incline in an unfolded state, that after the stroller is folded and unfolded, maintains the backrest in the previously set incline. Backrest **108** includes a recline pivot bar **90** which supports backrest **108** from the rear. Recline pivot bar **90** passes through flanges **91**A, **91**B located to protrude rearwardly from backrest **108**. Flanges **91**A, **91**B are provided with through-holes which include adjustment grooves **92**. Recline pivot bar **90** is biased via a resilient member to engage with grooves **92** to provide recline positions for backrest **108**. Recline pivot bar **90** passes through flanges **91**A, **91**B and is pivotally attached to pivot frame **118** and an end of link **93**. Another end of link **93**, opposite to the end attached to recline pivot bar **90** is pivotally attached to an intermediate portion of slider **116**. As pivot frame **118** pivots and slider **116** moves along front leg **112**, backrest **108** pivots while recline pivot bar **90** remains in engagement with a selected adjustment groove **92**. In a folded state recline pivot bar **90** remains engaged with the selected adjustment groove **92**. When stroller **2** is returned to an unfolded state recline pivot bar **90** is still engaged with the selected adjustment groove **92** to provide the rigid memory back feature.

While this invention has been described in conjunction with exemplary embodiments outlined above, it is evident that many alternative, modifications and variations will be apparent to those skilled in the art. Accordingly, the exemplary embodiments of this invention, as set forth above, are intended to be illustrative, not limiting. Various changes may be made without departing from the spirit and scope of the invention.

The invention claimed is:

1. A folding chair, comprising:

two front legs and two rear legs configured to support the chair in an upright position;

two handle frames;

two first upper sliders configured to slide along respective handle frames;

an upper X frame including two upper frame members pivotally connected to each other at respective intermediate portions, each upper frame member pivotally connected to respective first upper sliders and to respective rear legs;

two second lower sliders configured to slide along respective front legs;

a lower X frame member including two lower frame members pivotally connected to each other at respective intermediate portions, each lower frame member pivotally connected to respective second lower sliders and attached to respective rear legs;

two pivot frames linked to respective second sliders and pivotally attached to respective rear leg two side frames pivotally attached to respective second lower sliders and respective pivot frames;

two lateral portions rotationally attached to respective sides frames and to respective rear legs;and

a seat portion supported by the back side frames and lateral portion.

2. The folding chair according to claim **1**, further comprising:

wheels rotationally attached to the front legs; and

wheels rotationally attached to the rear legs.

3. The folding chair according to claim **1** where the lower frame members include engaging portions configured to

engage a respective rear leg to prevent the chair from folding when in an unfolded state, and provide lateral rigidity.

4. The folding chair according to claim **3**, wherein the engaging portions are formed as grooves configured to retain respective rear legs.

5. A method of folding a chair including two front legs and two rear legs configured to support the chair in an upright position, two handle frames, two first upper sliders configured to slide along respective handle frames, an upper X frame including two upper frame members pivotally connected to each other at respective intermediate portions, each upper frame member pivotally connected to respective first upper sliders and to respective rear legs, two second lower sliders configured to slide along respective front legs, a lower X frame member including two lower frame members pivotally connected to each other at respective intermediate portions, each lower frame member pivotally connected to respective second lower sliders and attached to respective rear legs, and two pivot frames linked to respective second sliders and pivotally attached to respective rear legs, the method comprising:

detaching the two lower frame members from respective rear legs;

pivoting a top portion of handle frames toward a front of the chair;

sliding first upper sliders upward along respective handle frames and sliding second lower sliders downward along respective front legs so that handle frames, front legs and rear legs become substantially parallel in their length directions; and

collapsing the upper frame member and the lower frame members about their respective intermediate pivot points so that the two handle frames move toward each other, the two front legs move toward each other and the two rear legs move toward each other.

* * * * *