US006045145A

United States Patent [19]

Lan

[11] **Patent Number: 6,045,145**

[45] **Date of Patent: Apr. 4, 2000**

[54] **STROLLER WITH DETACHABLE AUXILIARY SEAT**

[76] Inventor: **Red Lan**, 15F, No. 108, Sec. 1, Hsin-Tai 5th Rd., Hsichic Chen, Taipei Hsien, Taiwan

[21] Appl. No.: **09/356,545**

[22] Filed: **Jul. 19, 1999**

[51] **Int. Cl.**[7] **B62B 3/02**

[52] **U.S. Cl.** **280/47.38**; 280/642; 280/658; 280/47.35; 280/47.41

[58] **Field of Search** 280/638, 639, 280/38, 641, 642, 647, 649, 650, 651, 654, 655, 655.1, 47.35, 47.38, 47.4, 47.41, 657, 658

[56] **References Cited**

U.S. PATENT DOCUMENTS

4,657,269	4/1957	Elvin	280/47.28
4,836,573	6/1989	Gebhard	280/47.38
5,184,835	2/1993	Huang	280/47.38
5,338,096	8/1994	Huang	280/47.38
5,664,795	9/1997	Huang	280/47.38
5,911,432	6/1999	Song	280/47.38

Primary Examiner—Richard M. Camby
Attorney, Agent, or Firm—Brinks Hofer Gilson & Lione

[57] **ABSTRACT**

A stroller includes a main frame, an auxiliary seat unit, a mounting unit, and a hooking unit. The main frame includes a first seat portion, a pair of front leg portions, and a pair of rear leg portions. The front and rear leg portions are disposed adjacent to lateral sides of the first seat portion, and are mounted to the first seat portion. The auxiliary seat unit includes an auxiliary frame and a second seat portion mounted on the auxiliary frame. The mounting unit mounts detachably the auxiliary frame on the main frame in front of the first seat portion, and includes a locking seat provided on one of the main frame and the auxiliary frame, and an insert member provided on the other one of the main frame and the auxiliary frame. The locking seat is formed with an insert hole which permits insertion of the insert member thereinto for engaging releasably the insert member. The hooking unit includes a support provided on the main frame, and a hook provided on the auxiliary frame for hooking at the support such that the auxiliary frame can be hooked on the main frame in order to support the auxiliary seat unit when the insert member engages the locking seat.

10 Claims, 6 Drawing Sheets

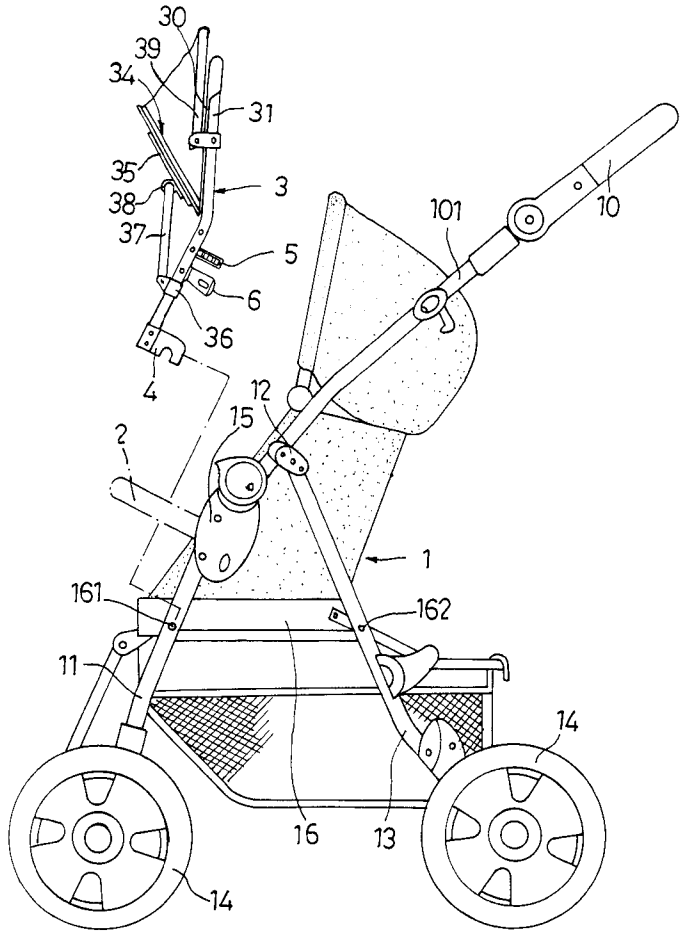

EVENFLO ET AL. EX1044

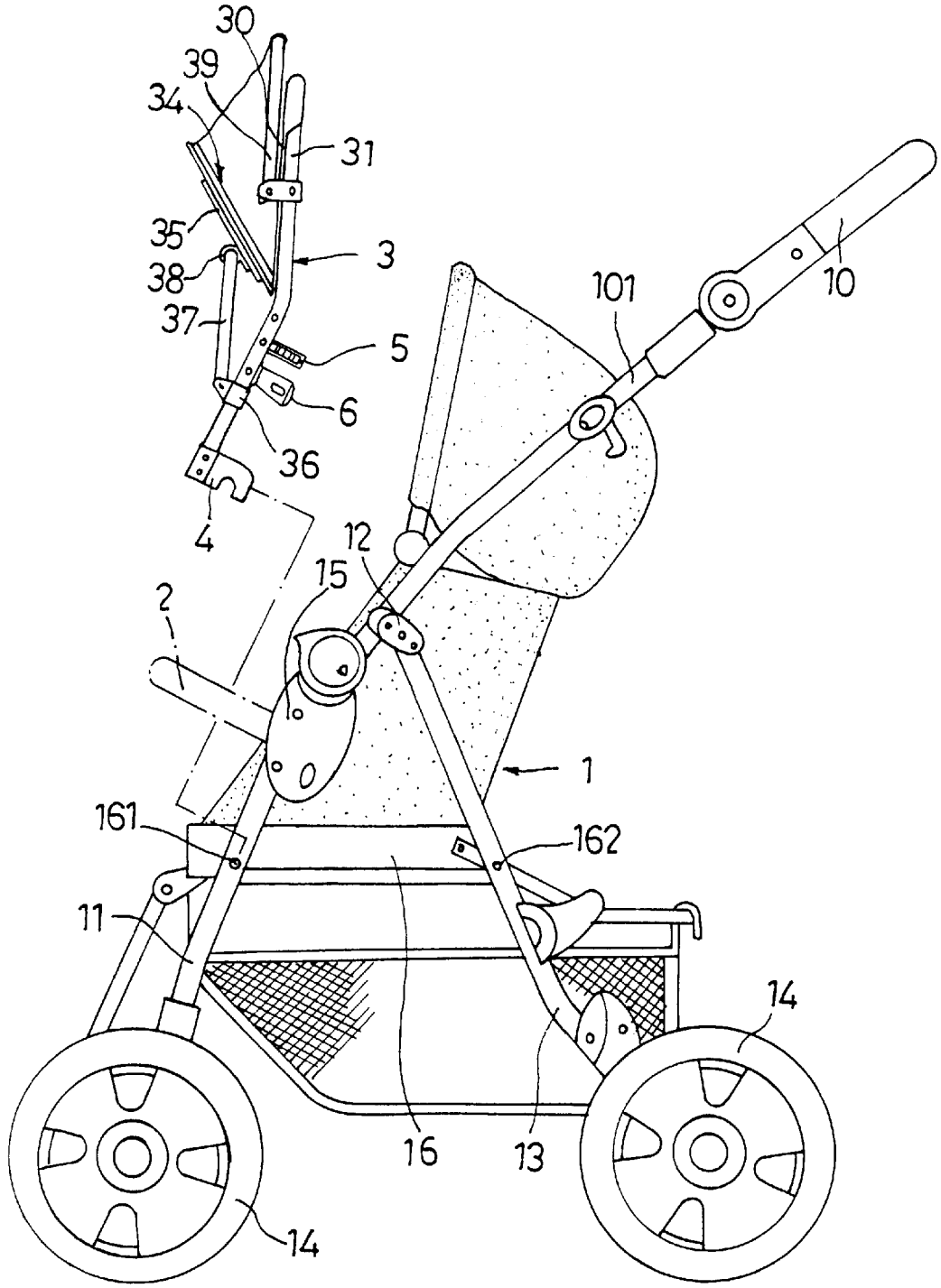

FIG. 1

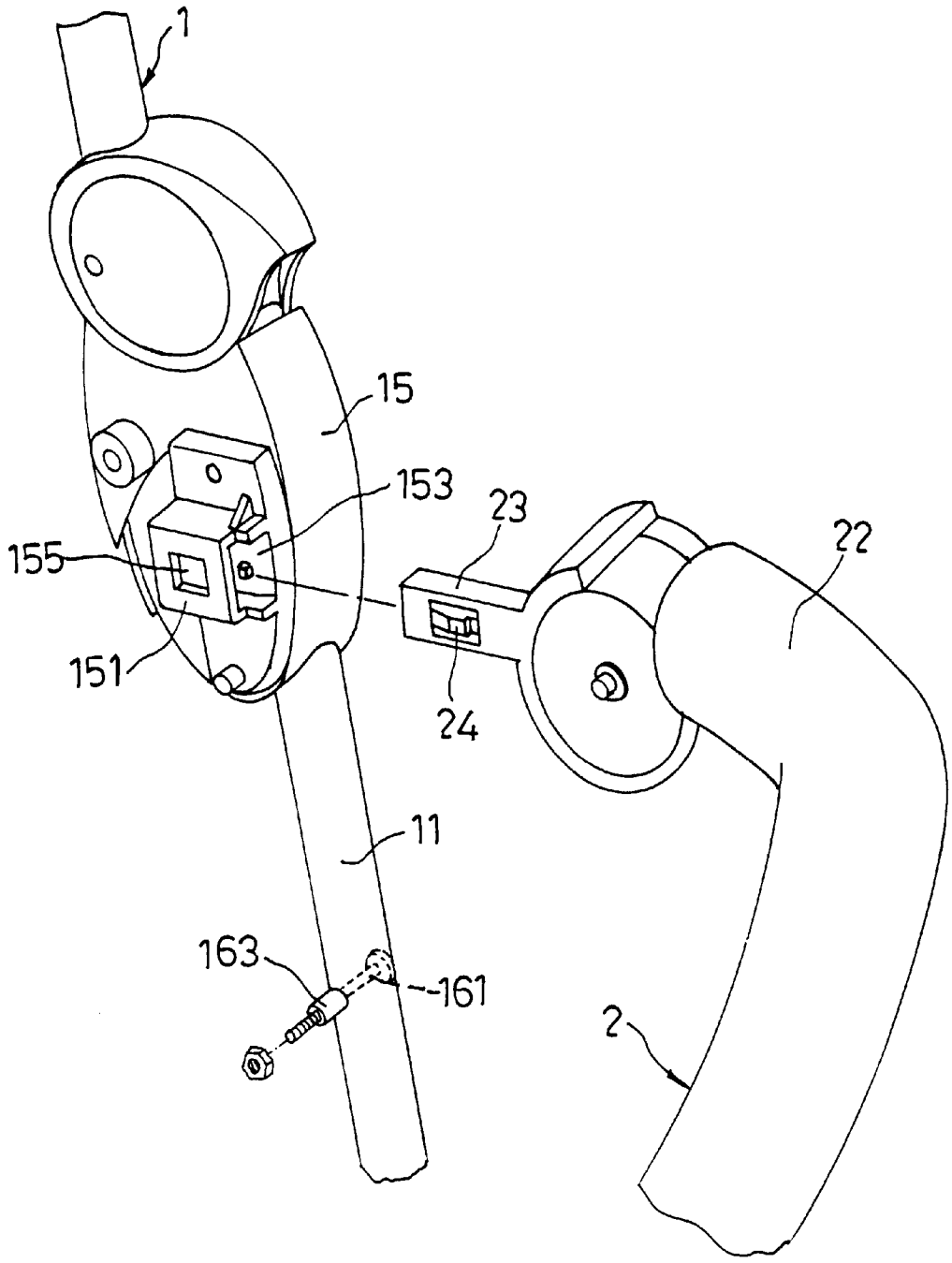

FIG. 2

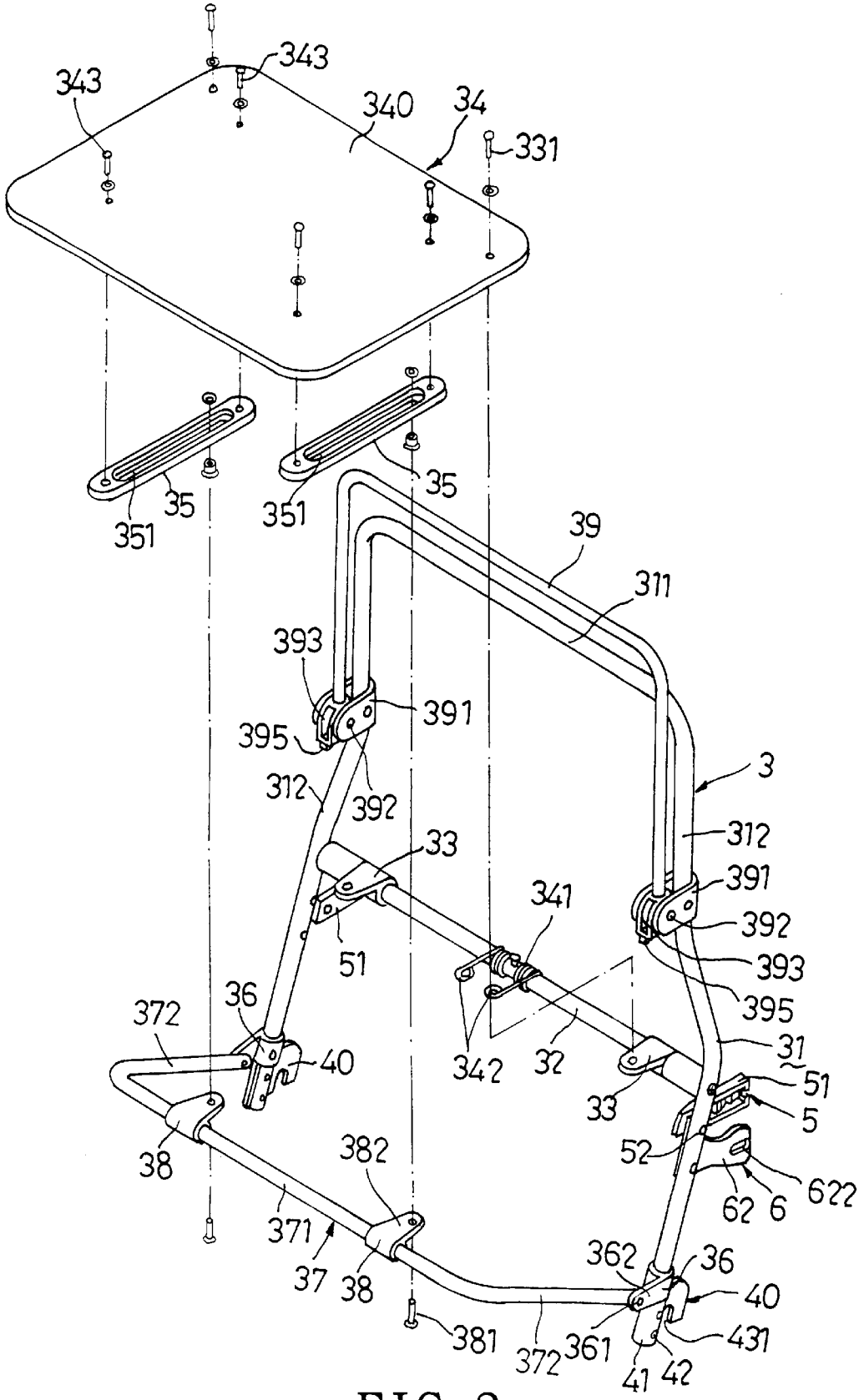
343
343
340
34
331
35
351
351
35
39
311
393
391
395
312
392
3
312
33
391
341
392
51
393
395
36
372
40
342
32
31
51
33
5
38
382
52
62
6
622
371
37
38
362
36
40
381
372
361
41
42
431

FIG. 3

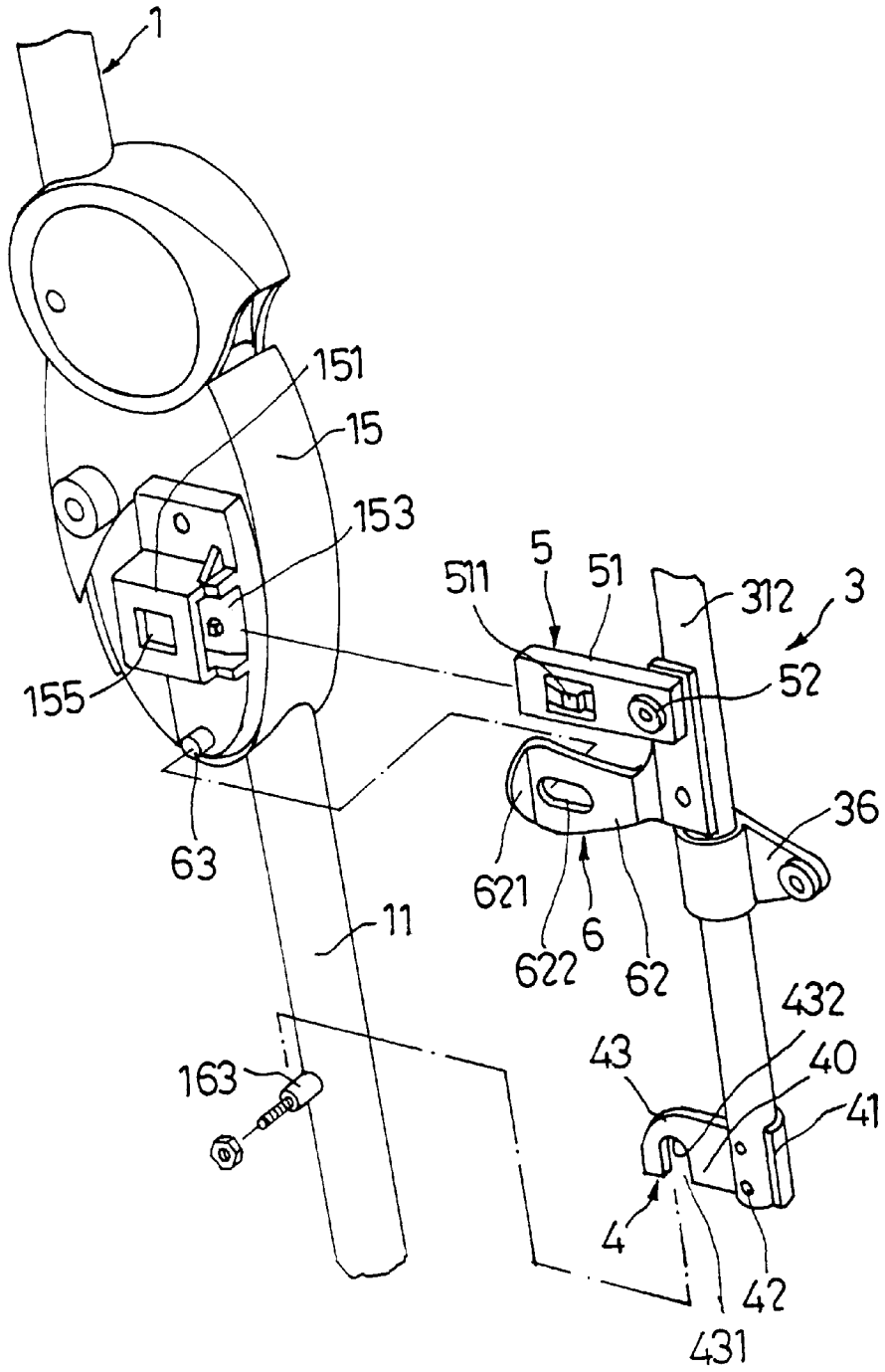
1
151
15
153
5
511
51
312
3
52
155
36
63
621
6
622
62
11
432
43
40
41
163
4
42
431

FIG. 4

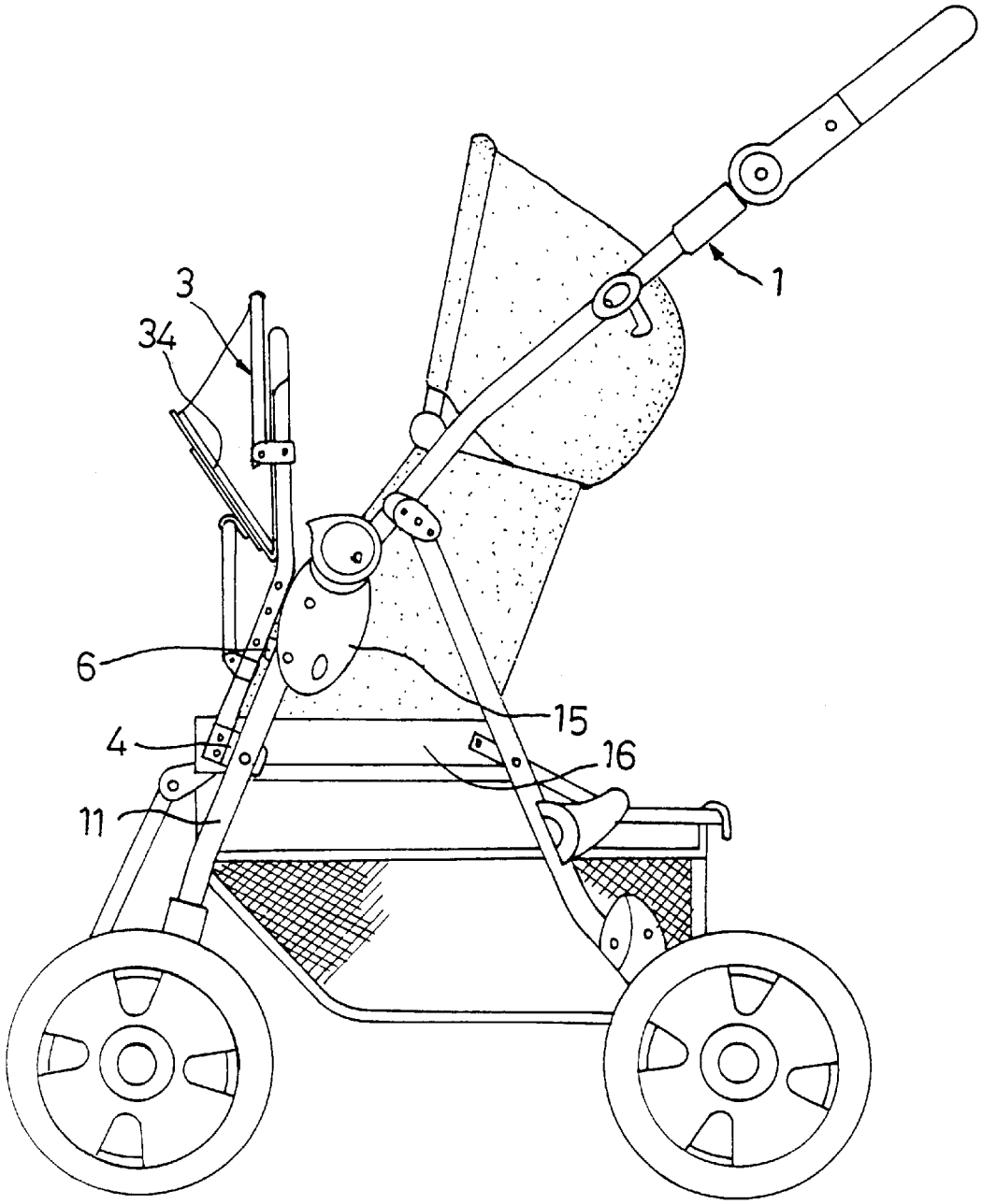

FIG. 5

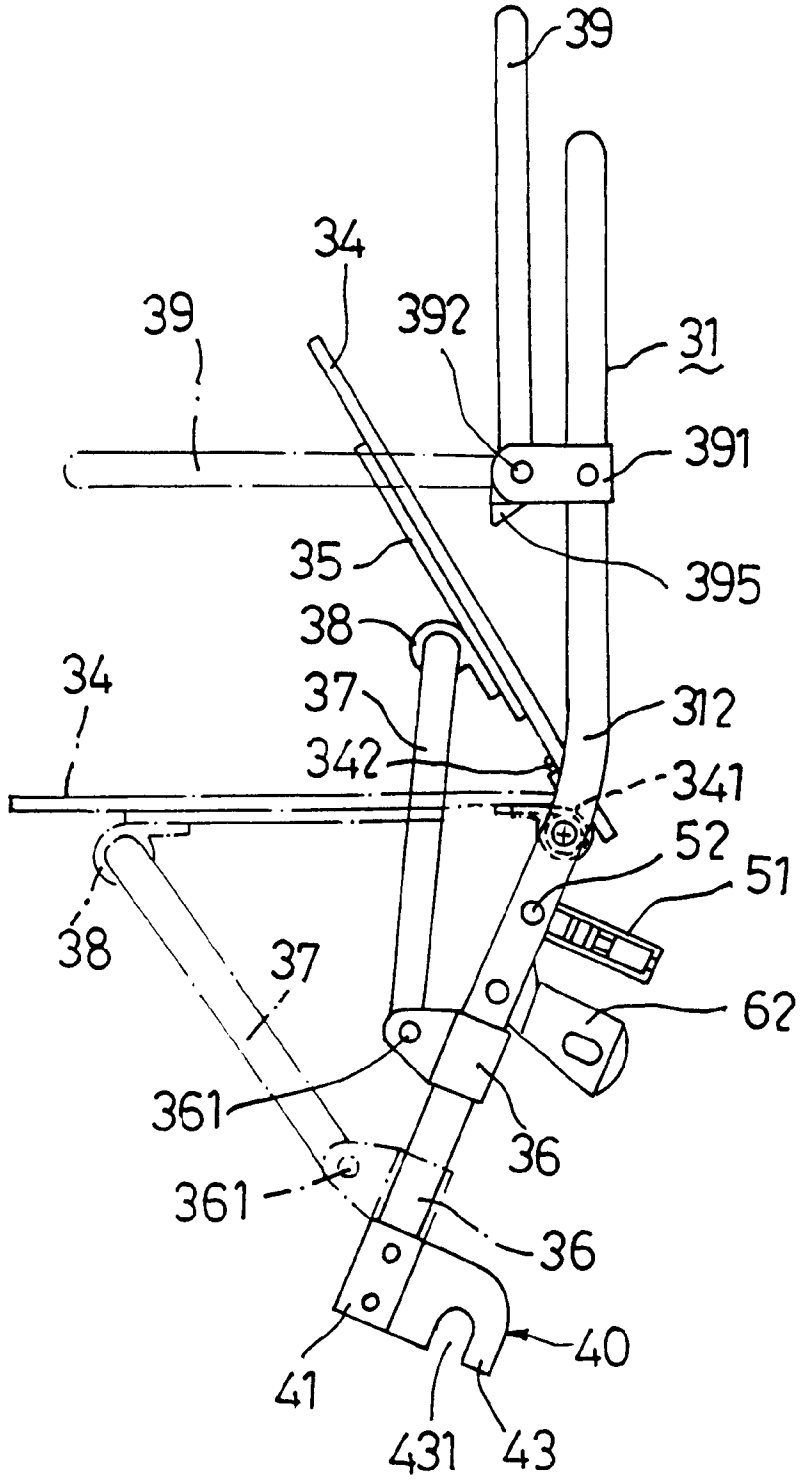
39
34
39
392
31
391
35
395
38
34
37
312
342
341
52
51
38
37
62
361
36
361
36
40
41
431
43

FIG. 6

STROLLER WITH DETACHABLE AUXILIARY SEAT

BACKGROUND OF THE INVENTION

1. Field of the Invention

The invention relates to a stroller, more particularly to a stroller which can be installed with an additional seat in a quick and simple manner.

2. Description of the Related Art

A conventional single seat stroller permits only one baby to be seated thereon. Although twin-seat strollers are known in the art, they generally have a relatively large size, and are thus difficult to control during use and inconvenient to store after use. Moreover, when only one baby is seated on the twin-seat stroller, the size of the stroller cannot be reduced as desired.

SUMMARY OF THE INVENTION

Therefore, the main object of the present invention is to provide a stroller which can be installed with an additional seat in a simple and quick manner.

Accordingly, the stroller of the present invention includes a main frame, an auxiliary seat unit, a mounting unit, and a hooking unit. The main frame includes a first seat portion with two lateral sides, a parallel pair of forwardly and downwardly extending wheeled front leg portions, and a parallel pair of rearwardly and downwardly extending wheeled rear leg portions. The front and rear leg portions are disposed adjacent to the lateral sides of the first seat portion, and are mounted to the first seat portion. The auxiliary seat unit includes an auxiliary frame and a second seat portion mounted on the auxiliary frame. The mounting unit mounts detachably the auxiliary frame on the main frame in front of the first seat portion, and includes a locking seat provided on one of the main frame and the auxiliary frame, and an insert member provided on the other one of the main frame and the auxiliary frame. The locking seat is formed with an insert hole which permits insertion of the insert member thereinto for engaging releasably the insert member. The hooking unit includes a support provided on the main frame, and a hook provided on the auxiliary frame for hooking at the support such that the auxiliary frame can be hooked on the main frame in order to support the auxiliary seat unit when the insert member engages the locking seat.

BRIEF DESCRIPTION OF THE DRAWINGS

Other features and advantages of the present invention will become apparent in the following detailed description of the preferred embodiment with reference to the accompanying drawings, of which:

FIG. **1** is a partly exploded side view of a preferred embodiment of a stroller according to the present invention;

FIG. **2** is an enlarged fragmentary exploded perspective view of the stroller of the preferred embodiment;

FIG. **3** is an exploded perspective view illustrating an auxiliary frame of the stroller of the preferred embodiment;

FIG. **4** is another enlarged fragmentary exploded perspective view of the stroller of the preferred embodiment;

FIG. **5** is a side view of the stroller of the preferred embodiment, in a state where an additional seat is provided; and

FIG. **6** is a side view of an auxiliary frame of the present invention, illustrating how the auxiliary frame can be folded.

DETAILED DESCRIPTION OF THE PREFERRED EMBODIMENT

Referring to FIG. **1**, the stroller of the preferred embodiment according to the present invention is shown to include

a main frame **1**, an auxiliary seat unit **3**, a guard frame **2**, a mounting unit **5**, a hooking unit **4** and a retaining unit **6**. The main frame **1** includes a seat portion **16**, a handle **10** with a parallel pair of connecting sections **101**(only one connecting section **101** is shown), a parallel pair of downwardly and forwardly extending front leg portions **11** (only one front leg portion **11** is shown) which are disposed adjacent to two lateral sides of the seat portion **16**, a parallel pair of downwardly and rearwardly extending rear leg portions **13** which are disposed adjacent to the lateral sides of the seat portion **16**, a pair of connecting seats **15**(only one connecting seat **15** is shown) for connecting the front leg portions **11** to the connecting sections **101** of the handle **10**, and a pair of pivot units **12** (only one pivot units **12** is shown) for connecting the rear leg portions **13** to the connecting sections **101** of the handle **10**. Each of the front and rear leg portions **11**, **13** has a bottom end provided with a wheel **14**. Each of the front leg portions **11** is mounted to the seat portion **16** by means of a front fastening member **161**. Each of the rear leg portions **13** is mounted to the seat portion **16** by means of a rear fastening member **162**.

Referring to FIGS. **1** and **3**, the auxiliary seat unit **3** is to be mounted on a front side of the main frame **1**, and generally includes an auxiliary frame **31**, a seat portion **34**, and a support frame member **37**.

The auxiliary frame **31** includes a horizontal top bar **311**, a pair of upright mounting posts **312** extending downwardly from the top bar **311**, and a connecting rod **32** extending transversely between the mounting posts **312** to interconnect the same. An upper section of each of the mounting posts **312** is provided with a pivot seat **391**. A pair of pivot sleeves **33** are sleeved rotatably on the connecting rod **32**. A biasing member **341**, which is in the form of a torsion spring, is provided on the connecting rod **32** between the pivot sleeves **33**.

The seat portion **34** includes a seat board **340** which has a rear part resting on the connecting rod **32** and fastened to the pivot sleeves **33** by means of a pair of rivets **331** so as to be pivotable about the connecting rod **32**. The biasing member **341** has two legs **342** abutting against a bottom side of the seat board **340** so as to bias a front part of the seat board **340** upwardly. A parallel pair of rail members **35** are fastened on the bottom side of the seat board **340** by means of rivets **343**. Each of the rail members **35** is formed with a guiding groove **351** which extends from the front part to the rear part of the seat board **340**.

The support frame member **37** is generally U-shaped, and has a slide arm section **371** and an opposite pair of pivot arm sections **372** extending rearwardly and downwardly from the slide arm section **371**. The slide arm section **371** has a pair of coupling members **38** secured thereon. Each of the coupling members **38** has a flange portion **382**. A pin **381** extends through the flange portion **382** of a respective one of the coupling members **38** and into the guiding groove **351** of a respective one of the rail members **35** to engage the same. The pins **381** are slidable along the guiding grooves **351**. A pair of slide sleeves **36** are sleeved slidably and respectively on the lower sections of the mounting posts **312**. Each of the slide sleeves **36** has a pivot lobe **362**. Each of the pivot arm sections **372** of the support frame member **37** has a lower end mounted pivotally on the pivot lobe **362** of a respective one of the slide sleeves **36** by means of a horizontal pivot shaft **361**.

A cushion **30** is provided on the seat board **34**, the top bar **311** and on the upper sections of the mounting posts **312** for cushioning a baby seated on the seat portion **34**.

EVENFLO ET AL. EX1044

The auxiliary seat unit **3** further includes a U-shaped guard member **39** which has two opposite end portions provided with pivot connectors **393** that are mounted pivotally on the pivot seats **391** of the mounting posts **312** by means of a pair of horizontal pivot shafts **392**. Each of the pivot connectors **393** is formed with a wedge-shaped stop **395**. The stops **395** abut against the mounting posts **312** when the guard member **39** pivots downwardly and forwardly relative to the mounting posts **312** so as to retain the guard member **39** at a predetermined angular position relative to the mounting posts **312**, e.g. to retain the guard member **39** at a horizontal position.

Referring to FIG. **4**, the locking unit **5** includes a pair of hollow locking seats **151** formed on inner sides of the connecting seats **15**, and a pair of first insert members **51** mounted pivotally and held frictionally on the mounting posts **312** of the auxiliary frame **31** by means of a pair of pivot pins **52**. Each of the locking seats **151** is formed with an insert hole **153** which opens forwardly, and has a side wall formed with a locking opening **155** communicated with the insert hole **153**. Each of the first insert members **51** is insertable into the insert hole **153** of a respective one of the locking seats **151**, and is formed with a resilient locking protrusion **511** which extends through and which engages the locking opening **155** when the first insert member **51** is inserted into the respective locking seat **151**, thereby preventing undesired removal of first insert members **51** from the locking seats **151**. The auxiliary seat unit **3** can thus be mounted on the front side of the main frame **1**. The locking protrusions **511** are depressible for retraction into the locking seats **151** to permit release of the first insert members **51** from the locking seats **151**.

The retaining unit **6** includes a retaining stud **63** formed on the inner side of one of the connecting seats **15** below the locking seat **151**, and a resilient retaining plate **62** mounted on one of the mounting posts **312** of the auxiliary frame **31**. The retaining stud **63** projects inwardly toward an opposite one of the front leg portions **11**. The retaining plate **62** extends rearwardly from said one of the mounting posts **312**, and is formed with a retaining hole **622** for engaging the retaining stud **63**. The retaining plate **62** further has a folded distal end portion **621** which extends inwardly toward the opposite one of the front leg portions **11** and which enables the retaining stud **63** to slide into and engage the retaining hole **622** when the first insert members **51** are inserted into the insert holes **153** of the locking seats **151**.

The hooking unit **4** includes a pair of hooking plates **40** (see FIG. **3**) mounted respectively on bottom ends of the mounting posts **312**, and a pair of support rods **163** provided on the front fastening members **161** of the main frame **1** and extending between the front leg portions **11** and adjacent lateral sides of the seat portion **16** (see FIG. **1**). Each of the hooking plates **40** has a mounting end **41** mounted on a respective one of the mounting posts **312** by rivets **42**, and a hooking end **43** projecting rearwardly from the respective mounting post **312** and formed with an engaging groove **431** that opens downwardly. Each of the support rods **163** has a circular circumference. The engaging groove **431** of each of the hooking plates **40** has a curved groove-defining edge **432** that complements the circumference of a respective one of the support rods **163**. Therefore, the mounting posts **312** are pivotable about an axis of the support rods **163** to facilitate insertion of the first insert members **51** into the insert holes **153**. The support rods **163** cooperatively serve as a support for supporting the auxiliary seat unit **3** when the first insert members **51** move toward the locking seats **151** for engaging the same.

Referring to FIGS. **3** and **6**, the pair of slide sleeves **36** are disposed between the hooking plates **40** and the first insert members **51** on the mounting posts **312** of the auxiliary frame **31**. Therefore, when the front part of the seat board **34** is biased upwardly by the biasing member **341**, the slide arm section **371** of the support frame member **37** slides on the bottom side of the seat board **34** from the front part toward the rear part, and the pivot arm sections **372** pivot toward the mounting posts **312** about an axis of the pivot shafts **361**. At the same time, the slide sleeves **36** move upwardly along the mounting posts **312** to move the seat board **340** closer to the mounting posts **312**.

Referring again to FIGS. **1** and **2**, the guard frame **2** is mounted on a front side of the main frame **1** to protect a baby seated on the seat portion **16** when the auxiliary seat unit **3** is detached from the main frame **1**. The guard frame **2** is generally U-shaped and has two opposite end portions **22**, each of which is provided with a second insert member **23** that is also insertable into the insert hole **153** of a respective one of the locking seats **151**. The second insert member **23** is also formed with a resilient locking protrusion **24** which extends through and which engages the locking opening **155** when the second insert member **23** is inserted into the insert hole **153**, thereby preventing undesired removal of the second insert member **23** from the locking seat **151**. The locking protrusions **24** are depressible to permit release of the second insert members **23** from the locking seats **151**, thereby permitting detachment of the guard frame **2** from the main frame **1**.

In the case that only one baby is to be seated on the stroller, the guard frame **2** is mounted on the front side of the main frame **1** by inserting the second insert members **23** from the front side rearwardly into the insert holes **153** of the locking seats **151**, and by allowing the locking protrusions **24** to engage the locking openings **155**. The guard frame **2** serves to protect the baby seated on the seat portion **16**.

When it is desired to provide an additional seat for seating another baby thereon, the guard frame **2** is detached from the main frame **1** by depressing the locking protrusions **24** to permit the release of the second insert members **23** from the locking seats **151**. Thereafter, as shown in FIGS. **4** and **5**, the auxiliary seat unit **3** is mounted on the front side of the main frame **1** as follows: The hooking plates **43** are hooked on the support rods **163**. The mounting posts **312** of the auxiliary frame **31** are subsequently pivoted rearwardly about an axis of the support rods **163** toward the main frame **1** such that the first insert members **51** are inserted into the insert holes **153** to allow the locking protrusions **511** to engage the locking openings **155** and such that the retaining stud **63** engages the retaining hole **622** of the retaining plate **62**. The support rods **163** help to support the combined weight of the auxiliary seat unit **3** and the baby seated thereon.

Referring back to FIGS. **3** and **6**, to seat the baby on the seat portion **34** of the auxiliary seat unit **3**, the front part of the seat board **340** is pressed downwardly against the biasing force of the biasing member **341**. At this time, the slide arm section **371** of the support frame member **37** moves along the rail members **35** to the front part of the seat board **34**, the pivot arm sections **372** pivot forwardly about the pivot shafts **361**, and the slide sleeves **36** slide downwardly to abut against the mounting ends **41** of the hooking plates **43**. The guard member **39** is turned forwardly about the pivot shafts **392** until the stops **395** abut against the mounting posts **312**. The guard member **39** is thus retained releasably at the horizontal position. The baby can be seated on the seat portion **34** from above the auxiliary seat unit **3**.

Referring once again to FIGS. **4** and **5**, when the additional seat provided by the auxiliary seat unit **3** becomes

unnecessary, the auxiliary seat unit **3** can be detached from the main frame **1** as follows: The locking protrusions **511** are depressed for retraction into the locking seats **151** to permit release of the first insert members **51** from the locking seats **151**. At the same time, the folded end portion **621** of the retaining plate **62** is pulled inwardly to disengage the retaining stud **63** from the retaining hole **622**. The mounting posts **312** are then pivoted forwardly about the axis of the support rods **163** for removal of the auxiliary frame **31** from the main frame **1**.

In the present embodiment, the locking seats **151** are provided on the front leg portions **11** of the main frame **1**, while the first and second insert members **51**, **23** are respectively provided on the auxiliary frame **31** and the guard frame **2**. However, the stroller of the present invention is not limited to the illustrated embodiment. In other embodiments, the locking seats may be formed on the auxiliary frame and on the guard frame, while the insert members may be formed on the main frame.

According to the present invention, an additional seat can be easily provided on the stroller and can be detached from the stroller as desired in a simple and quick manner. The stroller of the present invention does not occupy as much space as a conventional twin-seat stroller.

While the present invention has been described in connection with what is considered the most practical and preferred embodiment, it is understood that this invention is not limited to the disclosed embodiment but is intended to cover various arrangements included within the spirit and scope of the broadest interpretation so as to encompass all such modifications and equivalent arrangements.

I claim:

1. A stroller comprising:

a main frame including a first seat portion with two lateral sides, a parallel pair of forwardly and downwardly extending wheeled front leg portions, and a parallel pair of rearwardly and downwardly extending wheeled rear leg portions, said front and rear leg portions being disposed adjacent to said lateral sides of said first seat portion and being mounted to said first seat portion;

an auxiliary seat unit including an auxiliary frame and a second seat portion mounted on said auxiliary frame;

a mounting unit for mounting detachably said auxiliary frame on said main frame in front of said first seat portion, including a locking seat provided on one of said main frame and said auxiliary frame, and a first insert member provided on the other one of said main frame and said auxiliary frame, said locking seat being formed with an insert hole which permits insertion of said first insert member thereinto for engaging releasably said first insert member; and

a hooking unit which includes a support provided on said main frame and a hook provided on said auxiliary frame for hooking at said support such that said auxiliary frame can be hooked on said main frame in order to support said auxiliary seat unit when said first insert member engages said locking seat.

2. The stroller according to claim **1**, wherein said first insert member has a resilient locking protrusion, and said locking seat is formed with a locking opening communicated with said insert hole, said locking protrusion extending through and engaging said locking opening to prevent undesired removal of said first insert member from said locking seat and being depressible for retraction into said locking seat to permit removal of said first insert member from said locking seat.

3. The stroller according to claim **1**, wherein said support of said hooking unit includes a pair of horizontal support rods which are aligned with each other and which extend between said front leg portions and adjacent ones of said lateral sides of said first seat portion, respectively, said auxiliary frame including a pair of downwardly extending upright mounting posts having bottom ends, said hook including a pair of hooking plates mounted on and projecting rearwardly from said bottom ends of said mounting posts, each of said hooking plates being formed with an engaging groove that opens downwardly and that permits extension of a respective one of said support rods thereinto, said hooking plates engaging said support rods so as to support said auxiliary frame on said main frame when said first insert member is inserted into said insert hole of said locking seat.

4. The stroller according to claim **3**, wherein each of said support rods has a circular circumference, said engaging grooves of said support plates complementing said support rods, said auxiliary frame being pivotable rearwardly and forwardly about an axis of said support rods during extension and removal of said first insert member into and from said insert hole of said insert seat.

5. The stroller according to claim **1**, wherein a pair of said locking seats are provided on said front leg portions of said main frame, said auxiliary frame including a pair of downwardly extending upright mounting posts provided with a pair of said first insert members.

6. The stroller according to claim **5**, further comprising a U-shaped guard frame with opposite end portions, each of said end portions being provided with a second insert member that is insertable into said insert hole of a respective one of said locking seats for engaging releasably the respective one of said locking seats so as to permit mounting of said guard frame in front of said main frame when said auxiliary frame is detached from said main frame.

7. The stroller according to claim **5**, further comprising a retaining unit which includes a retaining stud provided on one of said front leg portions, and a retaining plate mounted on one of said mounting posts of said auxiliary frame, said retaining plate extending rearwardly from said auxiliary frame and being formed with a retaining hole for engaging said retaining stud when said first insert members are inserted into said locking seats.

8. The stroller according to claim **1**, wherein said auxiliary frame includes:

a pair of downwardly extending upright mounting posts;

a horizontal connecting rod which extends between said mounting posts for interconnecting said mounting posts;

a seat board which has a rear part resting and mounted pivotally on said connecting rod, a front part, and a bottom side provided with a rail member that is formed with a guiding groove which extends from said front part to said rear part;

a biasing member mounted on said connecting rod for biasing said seat board to pivot upwardly and rearwardly about said connecting rod; and

a support frame member having a lower end mounted pivotally on said mounting posts, and an upper end

provided with a pin which engages slidably said guiding groove for sliding along said guiding groove when said seat board pivots rearwardly about said connecting rod.

9. The stroller according to claim **8**, wherein said support frame member includes a slide arm section at said upper end, and aparallel pair of pivot arm sections which extend rearwardly and downwardly from said slide arm section, said slide arm section being provided with said pin for coupling slidably with said seat board, said auxiliary frame further including a pair of slide sleeves which are sleeved slidably and respectively on said mounting posts of said auxiliary frame, each of said pivot arm portions of said support frame member having a lower end mounted pivotally on a respective one of said slide sleeves.

10. The stroller according to claim **8**, wherein said auxiliary seat unit further includes a U-shaped guard member which has two opposite end portions mounted pivotally and respectively on said mounting posts above said seat portion such that said guard member is pivotable rearwardly and upwardly relative to said mounting posts, each of said end portions being provided with a stop which abuts against a respective one of said mounting posts for releasable retention of said guard member at a predetermined angular position relative to said mounting posts.

* * * * *