US008882134B2

(12) **United States Patent**
Rolicki et al.

(10) **Patent No.: US 8,882,134 B2**
(45) **Date of Patent: Nov. 11, 2014**

(54) **MANEUVERABLE STROLLERS**

(71) Applicants: **Peter Rolicki**, Wheeling, IL (US); **Liviu Iftinca**, Chicago, IL (US); **Wes Thomas**, Kenosha, WI (US); **Ted Bretschger**, Chicago, IL (US)

(72) Inventors: **Peter Rolicki**, Wheeling, IL (US); **Liviu Iftinca**, Chicago, IL (US); **Wes Thomas**, Kenosha, WI (US); **Ted Bretschger**, Chicago, IL (US)

(73) Assignee: **Kolcraft Enterprises, Inc.**, Chicago, IL (US)

(*) Notice: Subject to any disclaimer, the term of this patent is extended or adjusted under 35 U.S.C. 154(b) by 0 days.

(21) Appl. No.: **13/828,344**

(22) Filed: **Mar. 14, 2013**

(65) **Prior Publication Data**

US 2014/0191483 A1 Jul. 10, 2014

Related U.S. Application Data

(60) Provisional application No. 61/749,728, filed on Jan. 7, 2013.

(51) **Int. Cl.**
B62B 5/00 (2006.01)
B62B 7/04 (2006.01)

(52) **U.S. Cl.**
CPC ***B62B 7/04*** (2013.01)
USPC **280/647**; 280/650; 280/642

(58) **Field of Classification Search**
CPC B62B 5/00; B62B 7/00; B62B 9/00
USPC 280/642, 643, 647, 648, 651, 650, 280/47.38, 47.131
See application file for complete search history.

(56) **References Cited**

U.S. PATENT DOCUMENTS

1,239,498	A	9/1917	Madigan	
1,322,788	A *	11/1919	Hazelton	280/47.131
1,418,929	A	6/1922	House	
1,832,770	A	11/1931	Hallowell	
3,173,396	A *	3/1965	Bradov	280/47.38
3,831,960	A	8/1974	Walton	
4,310,167	A	1/1982	McLaurin	
4,433,869	A	2/1984	Payne, Jr. et al.	
4,893,826	A	1/1990	Ward et al.	
4,936,629	A	6/1990	Young	
5,022,669	A	6/1991	Johnson	
D326,748	S	6/1992	Kirk	

(Continued)

FOREIGN PATENT DOCUMENTS

CN	103328305	9/2013
EP	1970283	9/2008

(Continued)

OTHER PUBLICATIONS

Patent Cooperation Treaty, International Search Report, issued in connection with International Application No. PCT/US2011/062669, mailed on Jun. 29, 2012 (3 pages).

(Continued)

Primary Examiner — Hau Phan
(74) *Attorney, Agent, or Firm* — Hanley, Flight & Zimmerman, LLC.

(57) **ABSTRACT**

Maneuverable strollers are disclosed herein. An example stroller disclosed herein includes a frame having a front wheel and rear wheel to support the frame. An intermediate wheel is positioned between the front wheel and the rear wheel. A carriage is coupled to the rear wheel, the intermediate wheel and the frame.

20 Claims, 24 Drawing Sheets

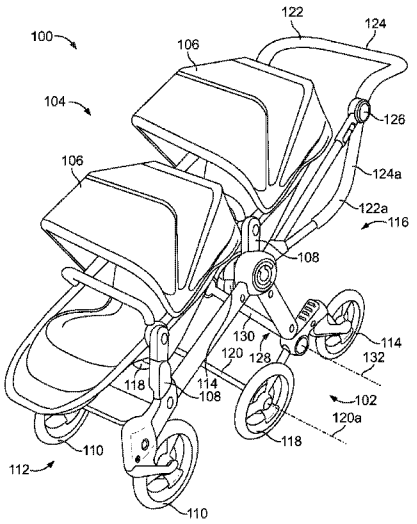

EVENFLO ET AL. EX1047

(56) **References Cited**

U.S. PATENT DOCUMENTS

5,158,319	A	10/1992	Norcia et al.	
5,301,968	A	4/1994	Ward et al.	
5,417,449	A	5/1995	Shamie	
5,556,118	A	9/1996	Kern et al.	
5,581,843	A	12/1996	Purnell	
5,653,460	A	8/1997	Fogarty	
5,664,795	A	9/1997	Haung	
5,722,594	A *	3/1998	Farr et al.	280/643
6,086,087	A	7/2000	Yang	
D431,798	S	10/2000	Strycker et al.	
6,135,222	A	10/2000	Furukawa	
6,267,406	B1	7/2001	Huang	
6,312,005	B1	11/2001	Lin	
6,394,470	B1	5/2002	Shirai	
6,454,286	B1 *	9/2002	Hosino	280/250.1
6,540,239	B2	4/2003	Lee, Jr.	
6,698,788	B2	3/2004	Yang	
6,702,306	B1	3/2004	Ockwell	
6,935,652	B2	8/2005	Fair et al.	
6,938,906	B1	9/2005	Black	
7,059,625	B2	6/2006	Horacek	
7,261,308	B2	8/2007	Gwisdalla et al.	
7,338,122	B2	3/2008	Hei et al.	
7,481,439	B2	1/2009	Thompson	
7,497,449	B2	3/2009	Logger	
7,559,606	B2	7/2009	Hei et al.	
7,597,332	B2	10/2009	Thompson	
7,740,313	B1	6/2010	Hei et al.	
7,770,970	B2	8/2010	Hei et al.	
7,780,184	B2	8/2010	Ehrenreich et al.	
7,789,413	B2	9/2010	Hei et al.	
7,832,756	B2	11/2010	Storm	
7,854,435	B2	12/2010	Campbell	
7,887,129	B2	2/2011	Hei et al.	
7,891,732	B2	2/2011	Hei et al.	
7,938,433	B2	5/2011	Pike et al.	
7,971,897	B2	7/2011	Pike et al.	
7,992,889	B2	8/2011	Ehrenreich et al.	
8,029,007	B2	10/2011	Jones et al.	
8,070,179	B2	12/2011	Pike et al.	
8,128,119	B2	3/2012	Saville et al.	
8,157,273	B2	4/2012	Bar-Lev	
8,262,107	B2	9/2012	Tuckey et al.	
8,276,935	B2	10/2012	Minato et al.	
2002/0125662	A1	9/2002	Magness	
2004/0011884	A1	1/2004	Wilt	
2005/0253348	A1	11/2005	Gwisdalla	
2005/0253431	A1	11/2005	Hei et al.	
2005/0264064	A1	12/2005	Hei et al.	
2006/0290107	A1	12/2006	Powers	
2007/0001410	A1	1/2007	Thompson	
2007/0075510	A1	4/2007	Hei et al.	
2007/0114738	A1	5/2007	Jones et al.	
2007/0257526	A1	11/2007	Hei et al.	
2008/0042476	A1	2/2008	Hei et al.	
2009/0072520	A1	3/2009	Ehrenreich et al.	
2009/0302556	A1	12/2009	White et al.	
2009/0302578	A1	12/2009	White et al.	
2010/0032925	A1	2/2010	Ehrenreich et al.	
2010/0072731	A1	3/2010	Thompson	
2010/0109270	A1	5/2010	Hei et al.	
2010/0109293	A1	5/2010	Friisdahl et al.	
2010/0140902	A1	6/2010	Zehfuss	
2010/0148553	A1	6/2010	Hei et al.	
2010/0314925	A1	12/2010	Hei et al.	
2011/0074195	A1	3/2011	Hei et al.	
2011/0101742	A1	5/2011	Hei et al.	
2011/0115264	A1	5/2011	Hei et al.	
2012/0080244	A1	4/2012	Hou	
2013/0154215	A1	6/2013	Thomas et al.	

FOREIGN PATENT DOCUMENTS

JP	63134365	6/1988
JP	10291480	11/1998
JP	2002087276	3/2002
JP	2006219060	8/2006
WO	2007033562	3/2007
WO	2012075157	6/2012

OTHER PUBLICATIONS

Patent Cooperation Treaty, Written Opinion of the International Searching Authority, issued in connection with International Application No. PCT/US2011/62669 (8 pages).

Glaro Products, "Glaro Glider Ultimate Bellman Carts," product description, Feb. 22, 2011, 7 pages.

Kegworks, "Six Wheel Warehouse Cart," product description, Feb. 22, 2011, 3 pages.

Global, "Little Giant 6-Wheel Platform Truck 24×48," product description, Feb. 22, 2011, 3 pages.

Office Action, issued by the United States Patent and Trademark Office in connection with U.S. Appl. No. 13/817,401, on Jun. 12, 2014, 13 pages.

The International Bureau, "International Preliminary Report on Patentability," issued in connection with International patent application No. PCT/US2011/062669 on Jun. 4, 2013, 9 pages.

The United States Patent and Trademark Office, "Non-Final Office Action," issued in connection with U.S. Appl. No. 13/817,401, mailed on Jun. 26, 2013, 20 pages.

The United States Patent and Trademark Office, "Final Office Action," issued in connection with U.S. Appl. No. 13/817,401, mailed on Dec. 24, 2013, 16 pages.

* cited by examiner

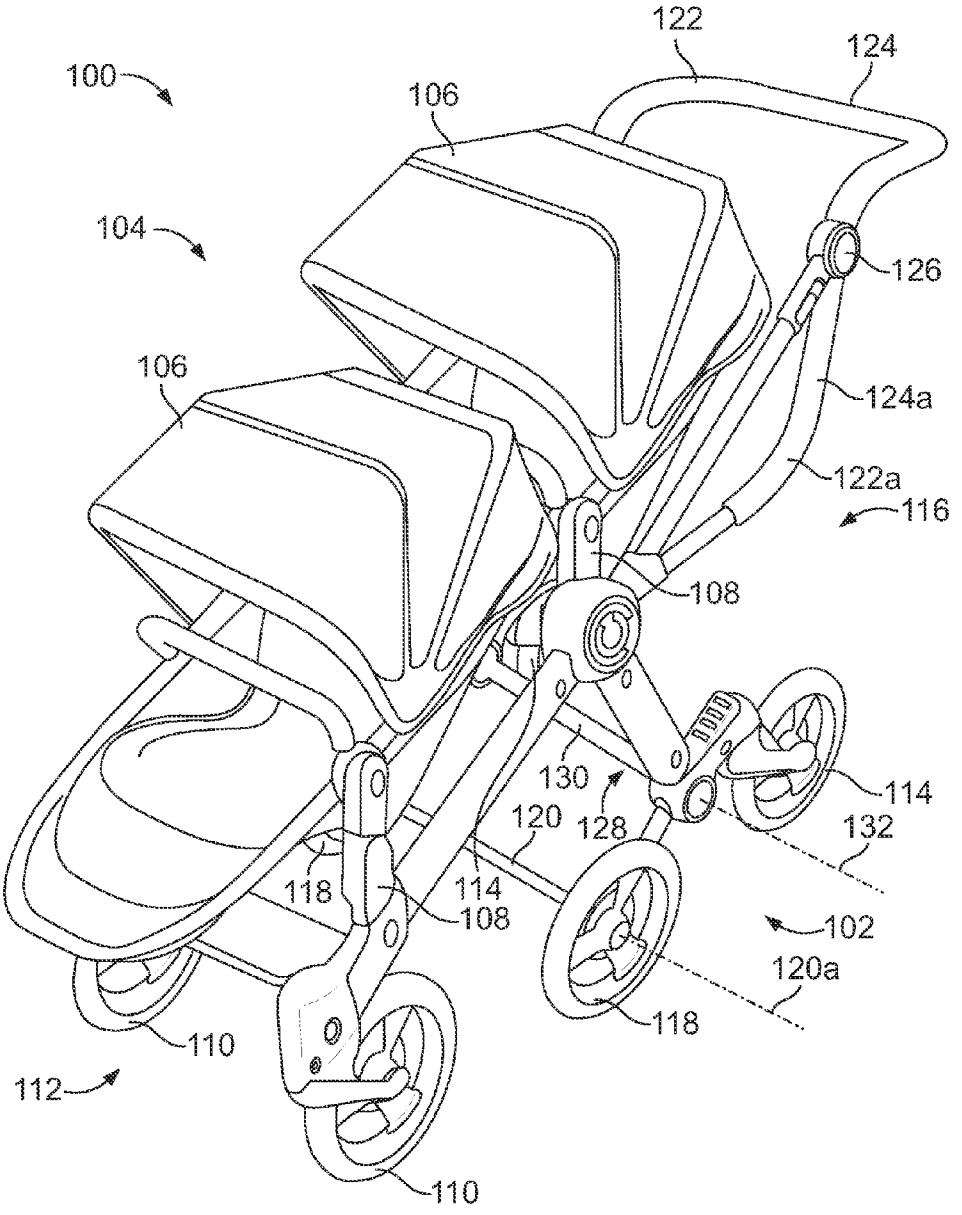
100
104
106
106
122
124
126
124a
122a
116
108
130
128
120
114
132
118
114
108
102
120a
118
110
112
110

FIG. 1

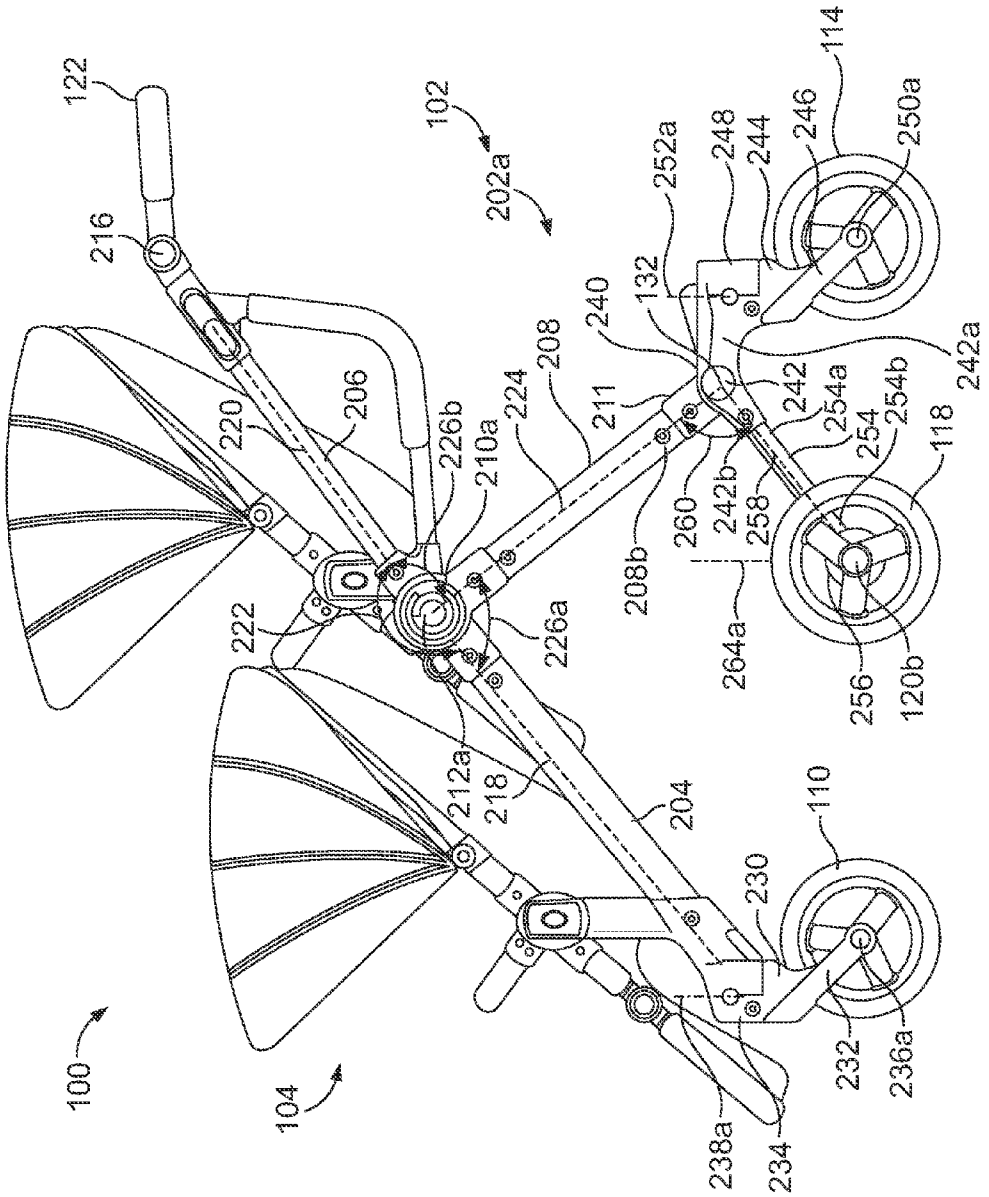
100
102
104
110
114
118
120b
122
132
202a
204
206
208
208b
210a
211
212a
216
218
220
222
224
226a
226b
230
232
234
236a
238a
240
242
242a
242b
244
246
248
250a
252a
254
254a
254b
256
258
260
264a

FIG. 2

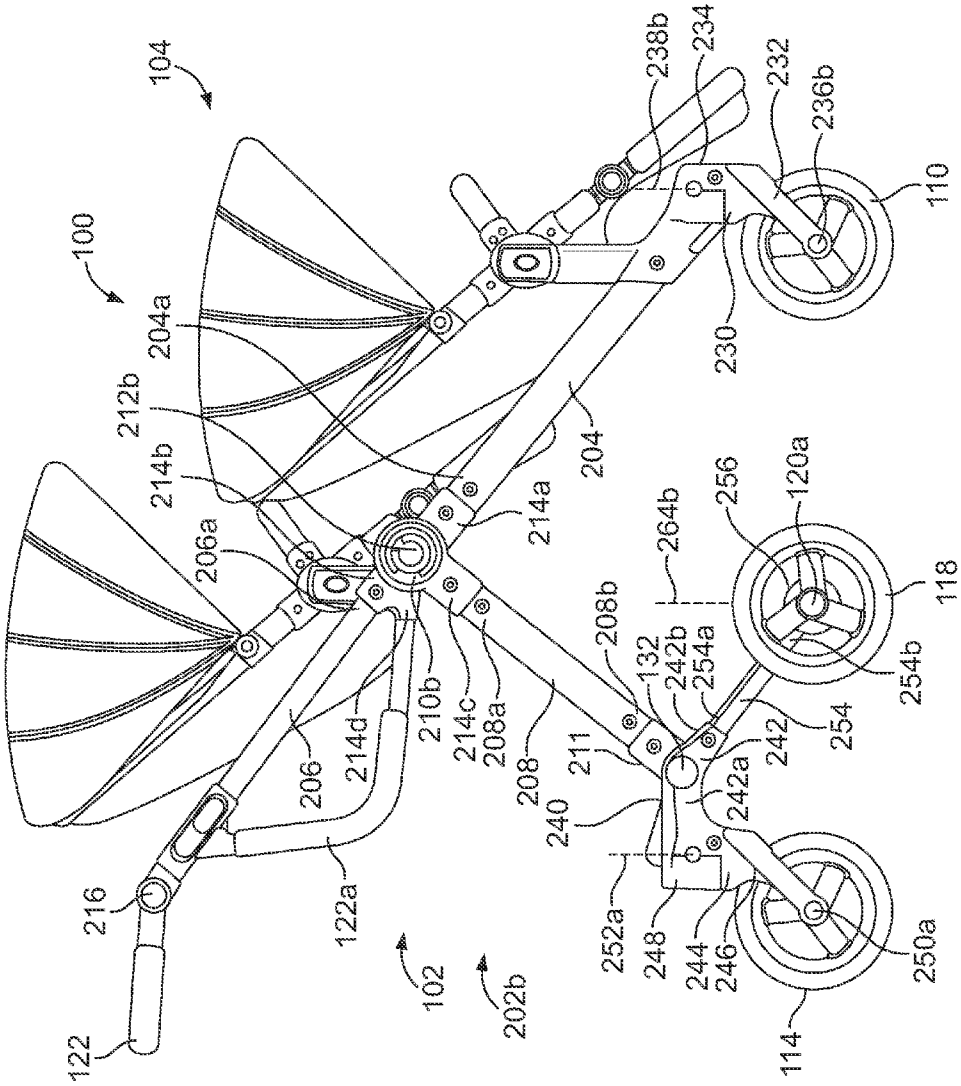
100
104
102
202b
204
204a
206
206a
208
208a
208b
210b
211
212b
214a
214b
214c
214d
216
122
122a
230
232
234
236b
238b
240
242
242a
242b
244
246
248
250a
252a
254
254a
254b
256
264b
110
114
118
120a
132

FIG. 3

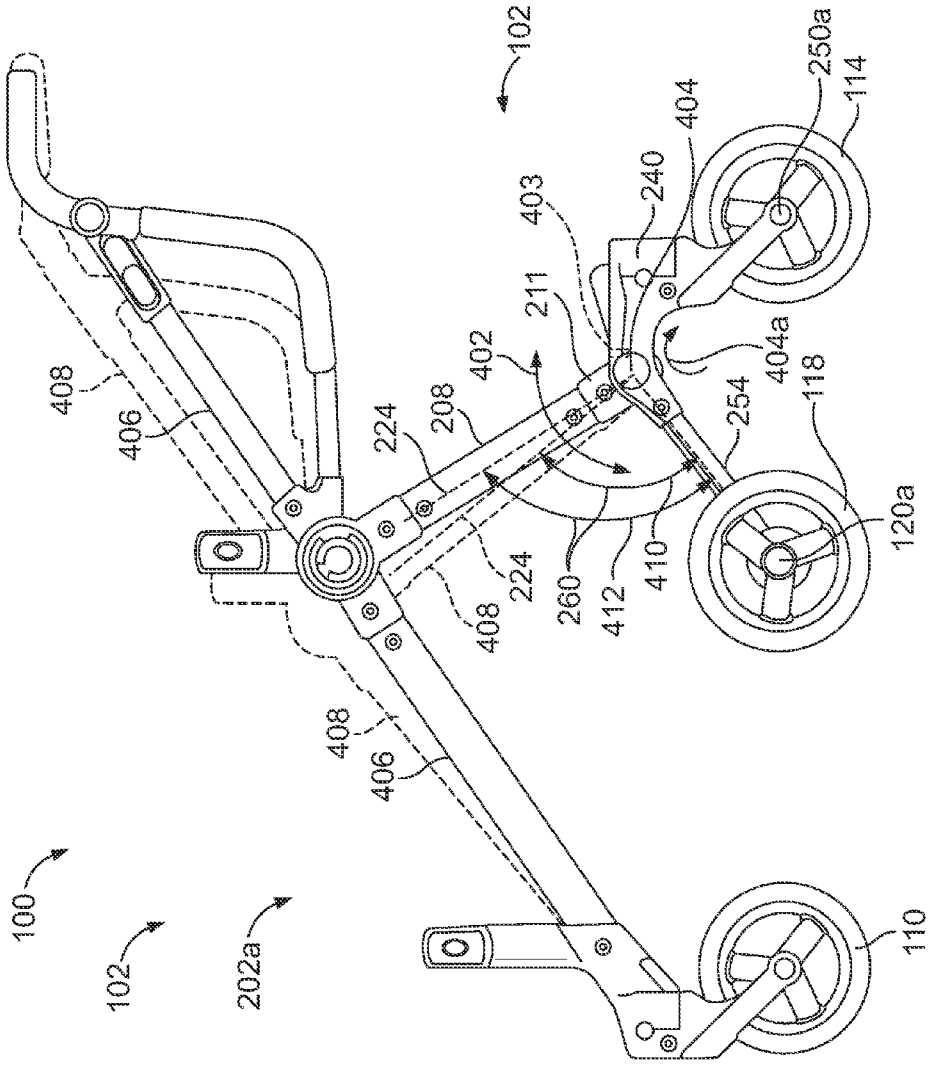
102
250a
114
404
240
403
211
402
404a
118
254
208
224
408
406
120a
410
412
260
224
408
408
406
100
102
202a
110

FIG. 4

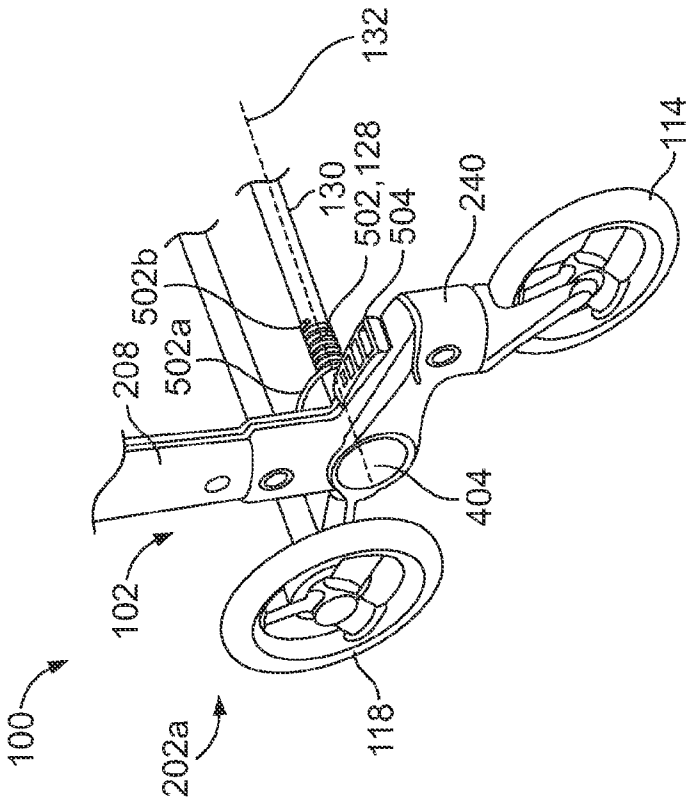
100
202a
118
102
404
208
502a
502b
504
502,128
130
132
240
114

FIG. 5A

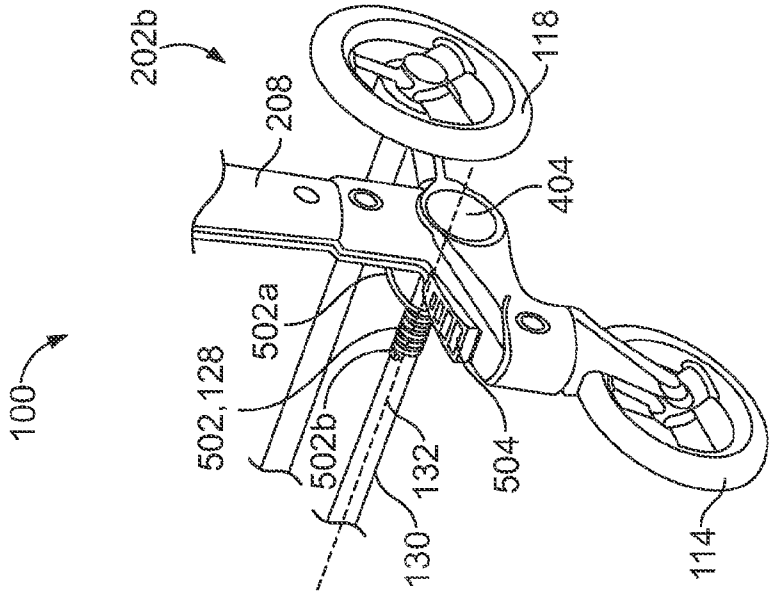
100
202b
208
118
404
502a
502,128
502b
132
130
504
114

FIG. 5B

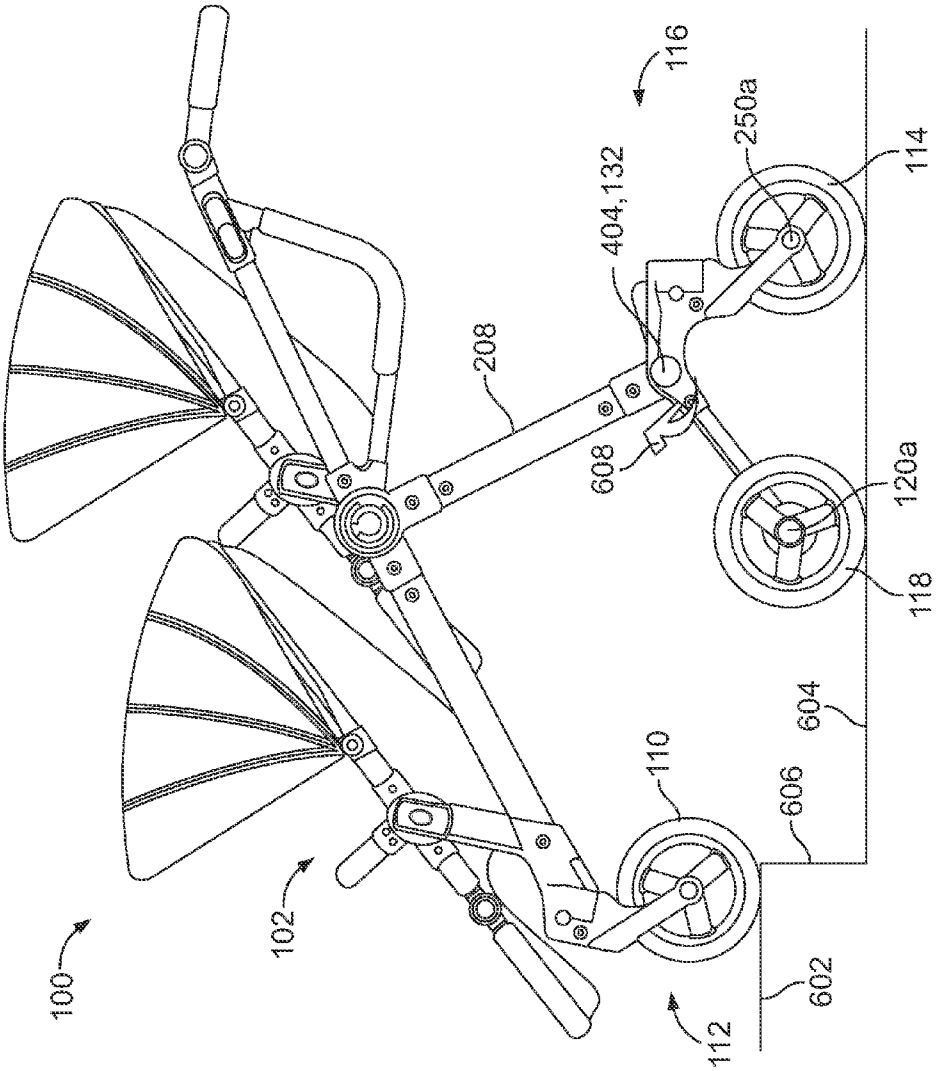
100
102
112
110
602
606
604
118
120a
608
208
404,132
250a
114
116

FIG. 6

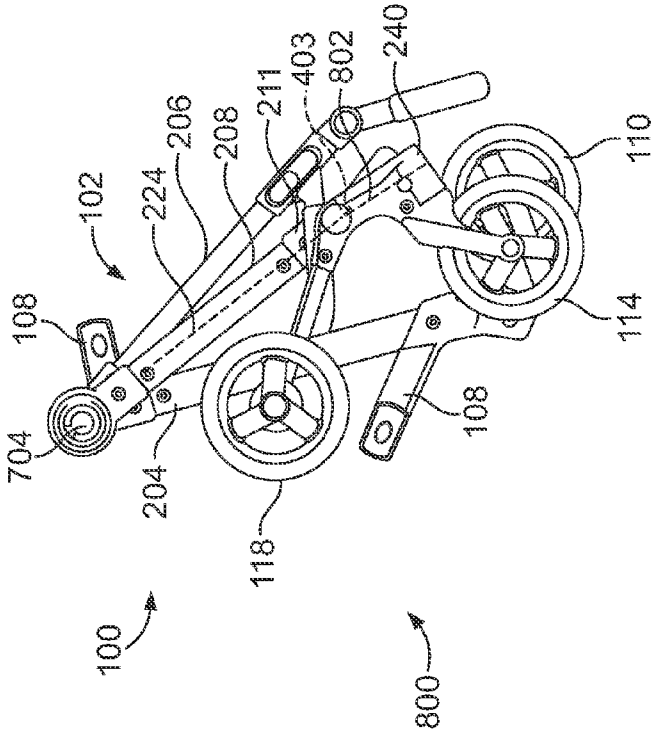
102
224
206
208
211
403
802
240
110
108
704
204
118
108
114
100
800

FIG. 8

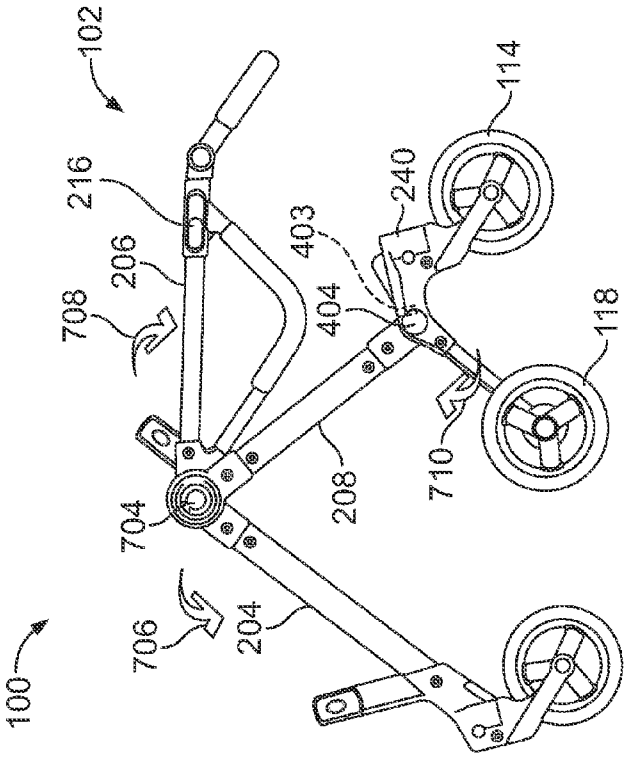
102
216
206
708
403
240
114
404
118
710
208
704
706
204
100

FIG. 7

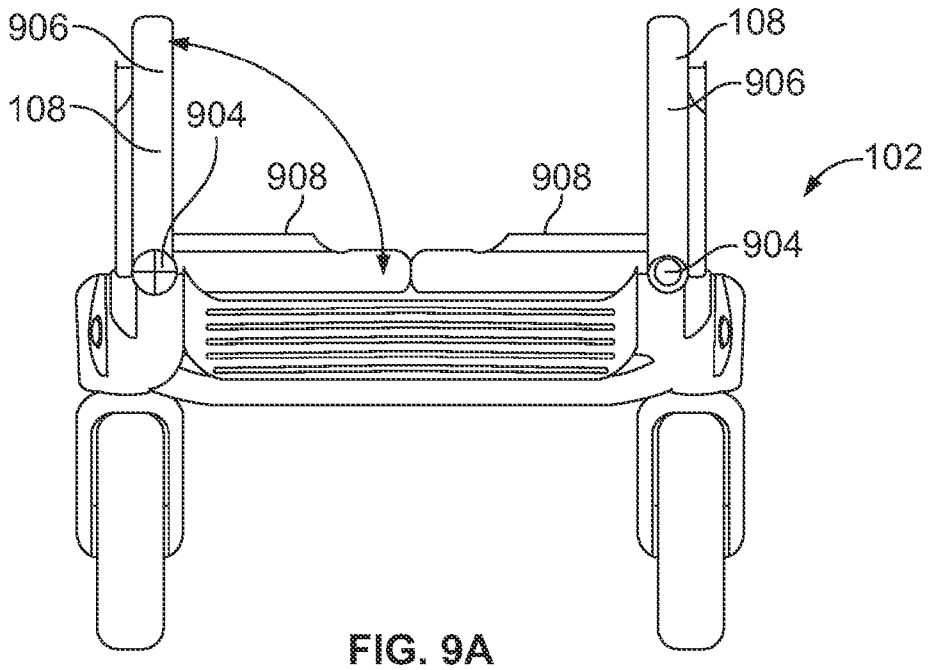

FIG. 9A

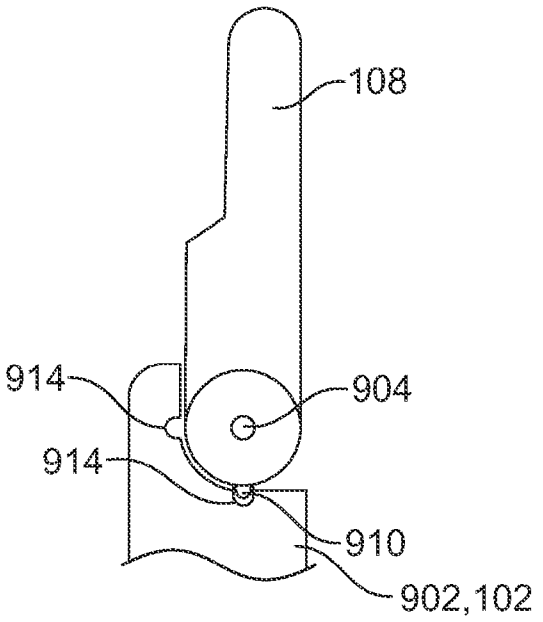

FIG. 9B

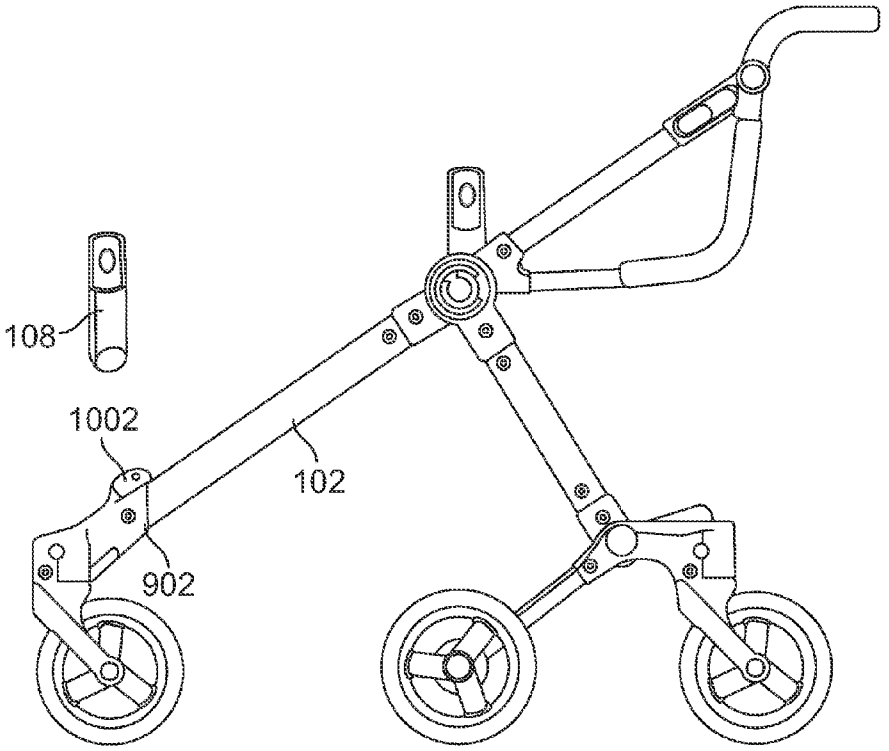

FIG. 10

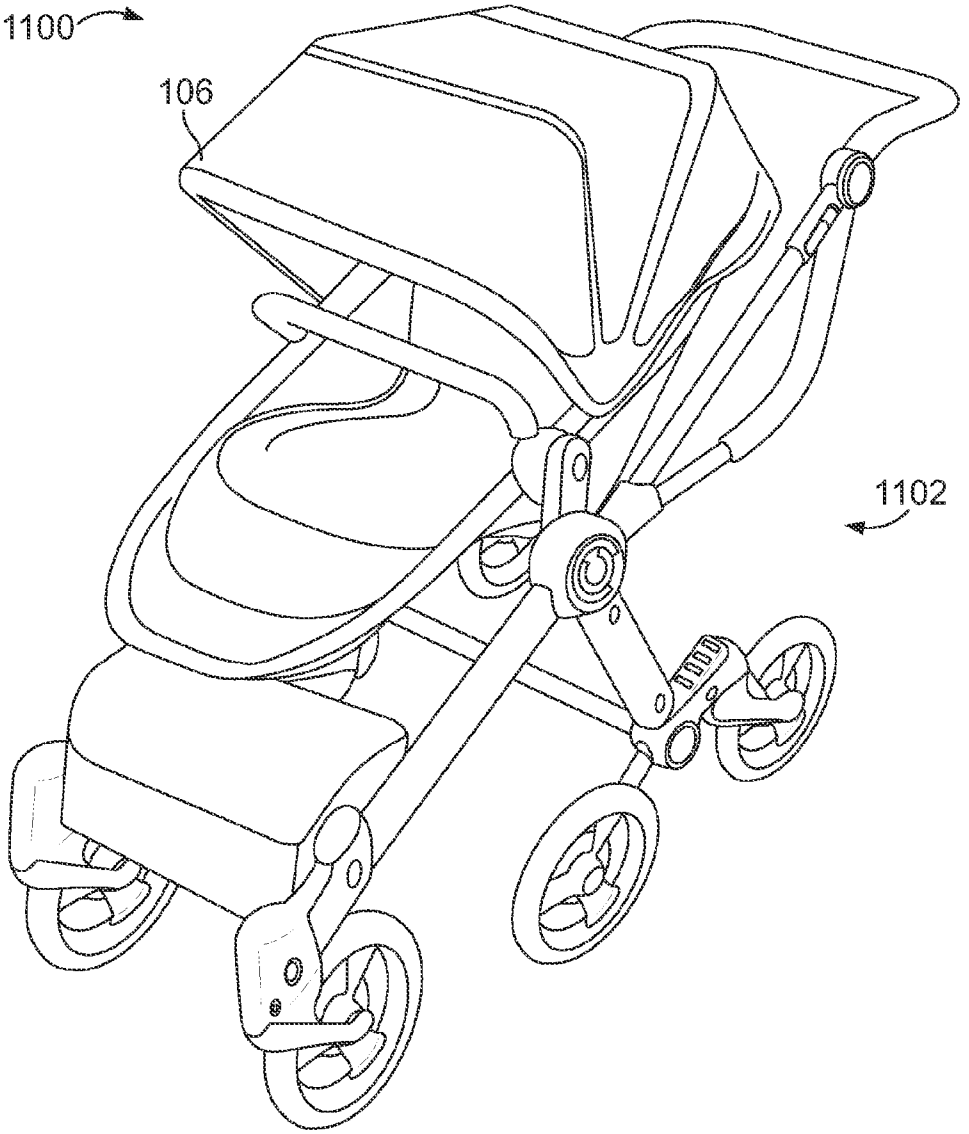

FIG. 11

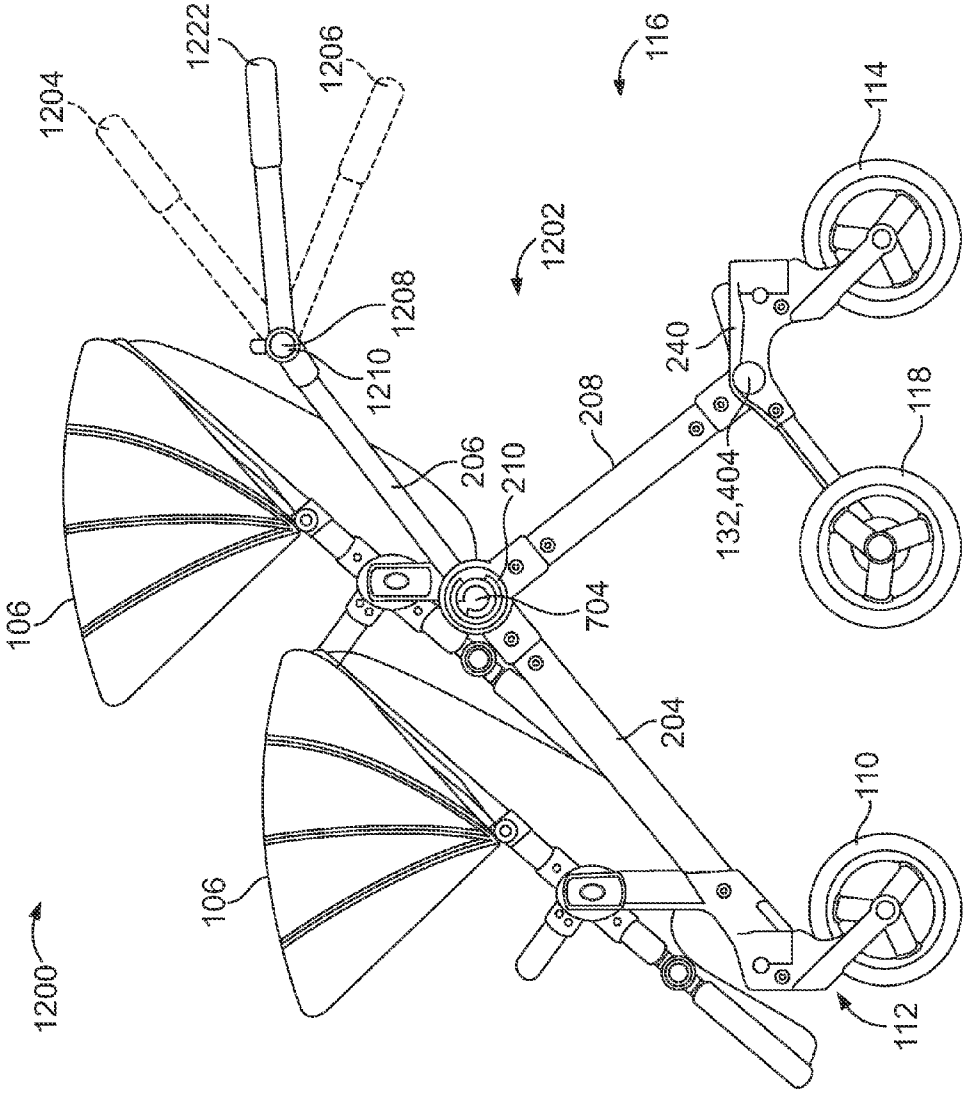
1222
1206
1204
116
114
1202
1208
1210
240
208
118
206
210
132,404
106
704
204
110
106
1200
112

FIG. 12

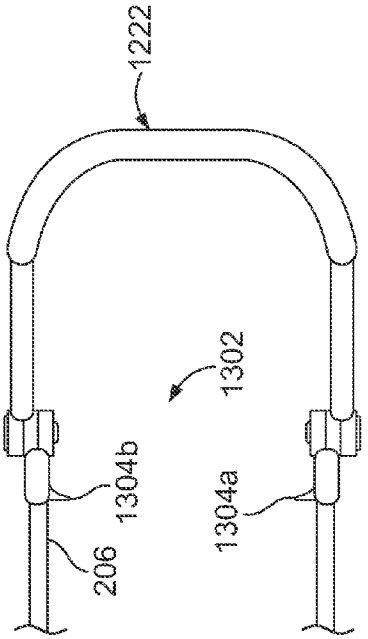

FIG. 13

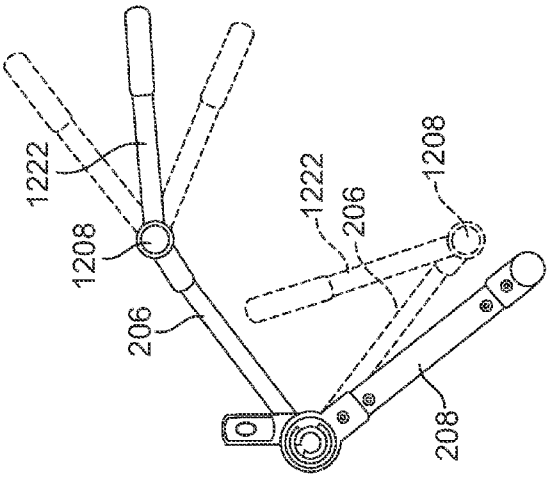

FIG. 14

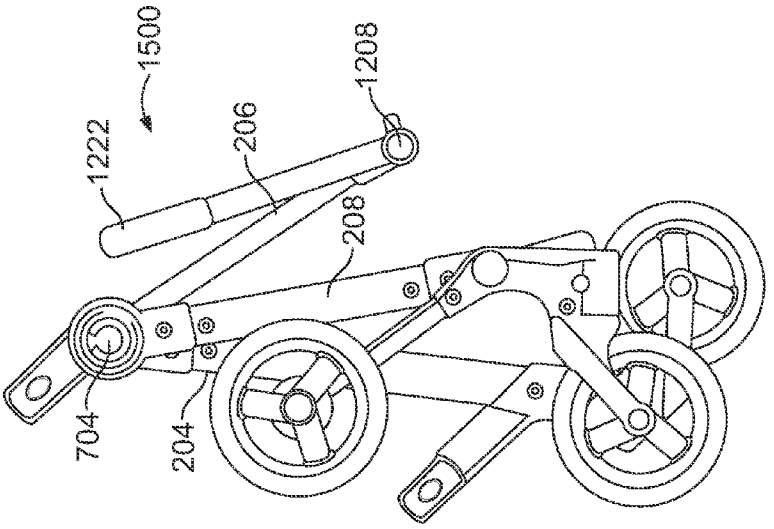

FIG. 15

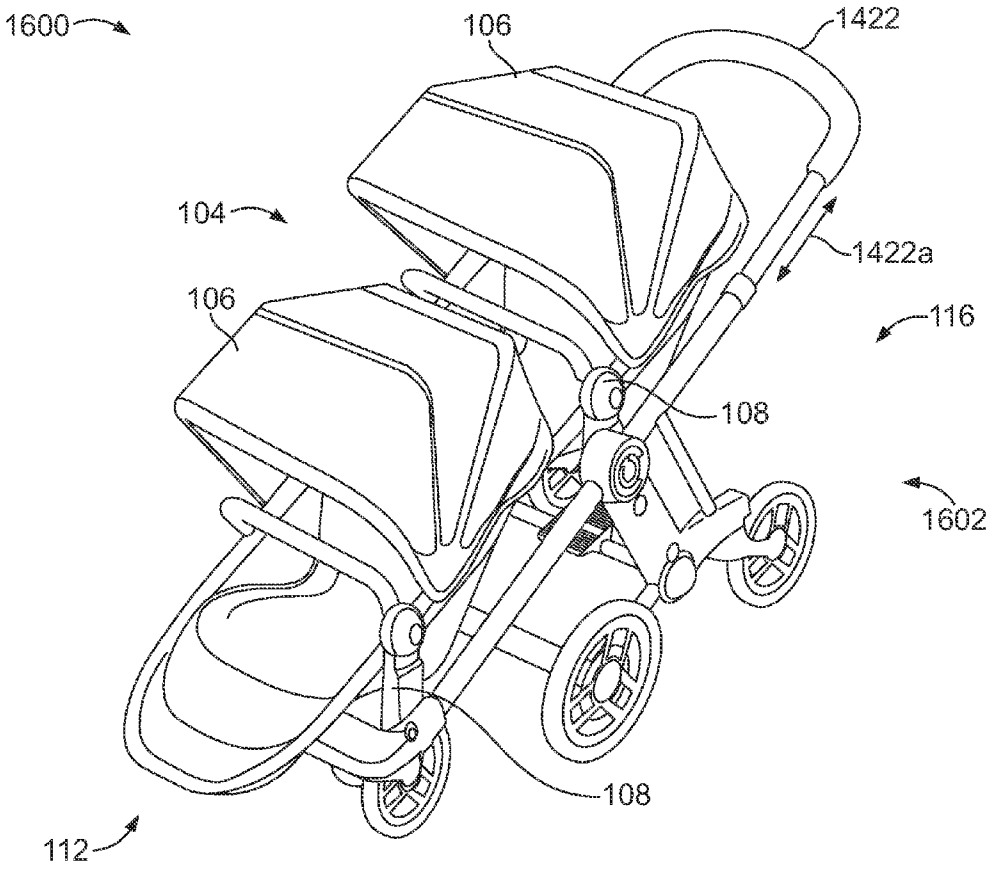

FIG. 16

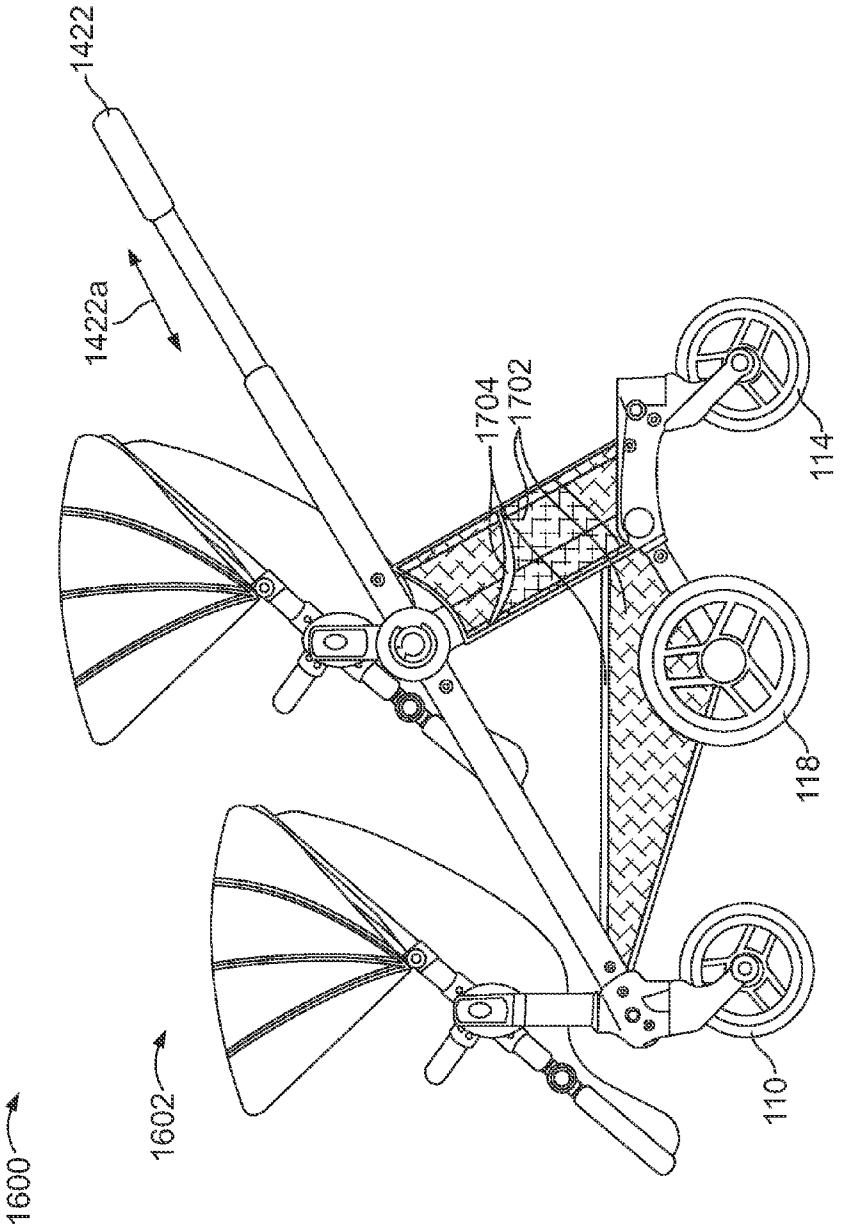

FIG. 17

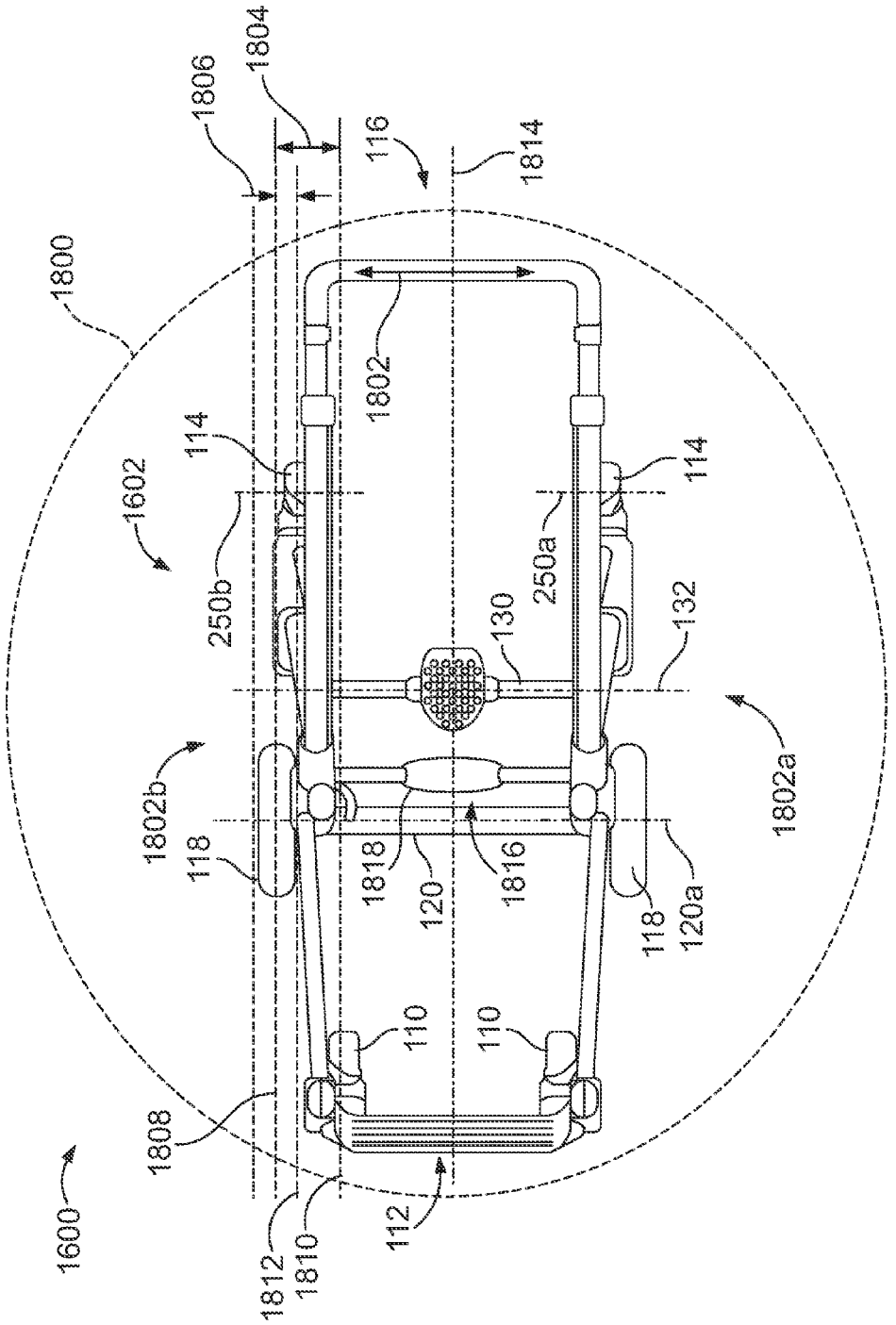
1800
1806
1804
116
1814
1802
114
1602
250b
250a
114
130
132
1802b
118
1818
120
1816
118
120a
1802a
110
110
1808
1600
1812
1810
112

FIG. 18

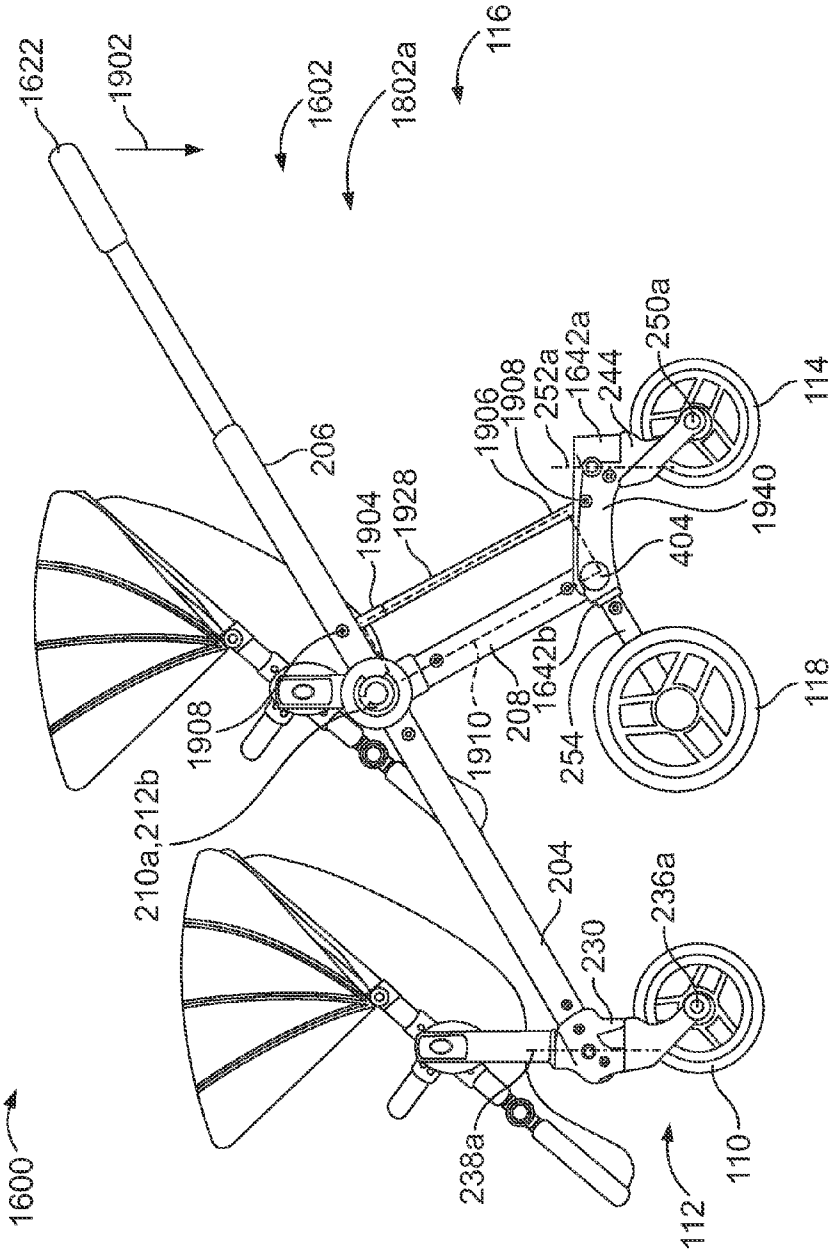
1622
1902
1602
1802a
116
206
1904
1928
1906
1908
252a
1642a
244
250a
114
1940
404
1642b
208
1910
254
118
1908
210a,212b
204
230
236a
238a
110
112
1600

FIG. 19

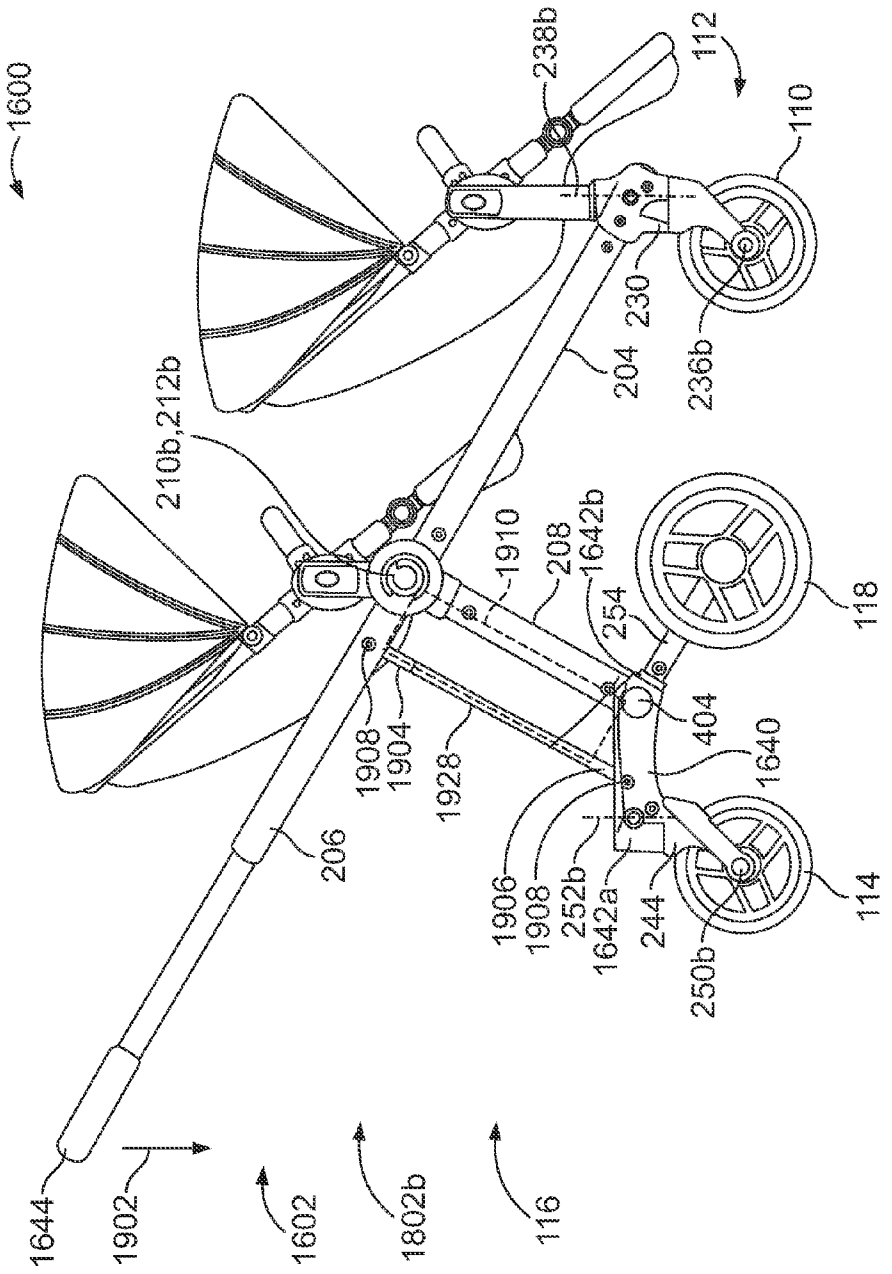
1600
238b
112
110
230
204
236b
210b,212b
1910
208
1642b
254
118
404
1640
1908
1904
1928
206
1906
1908
252b
1642a
244
114
250b
1644
1902
1602
1802b
116

FIG. 20

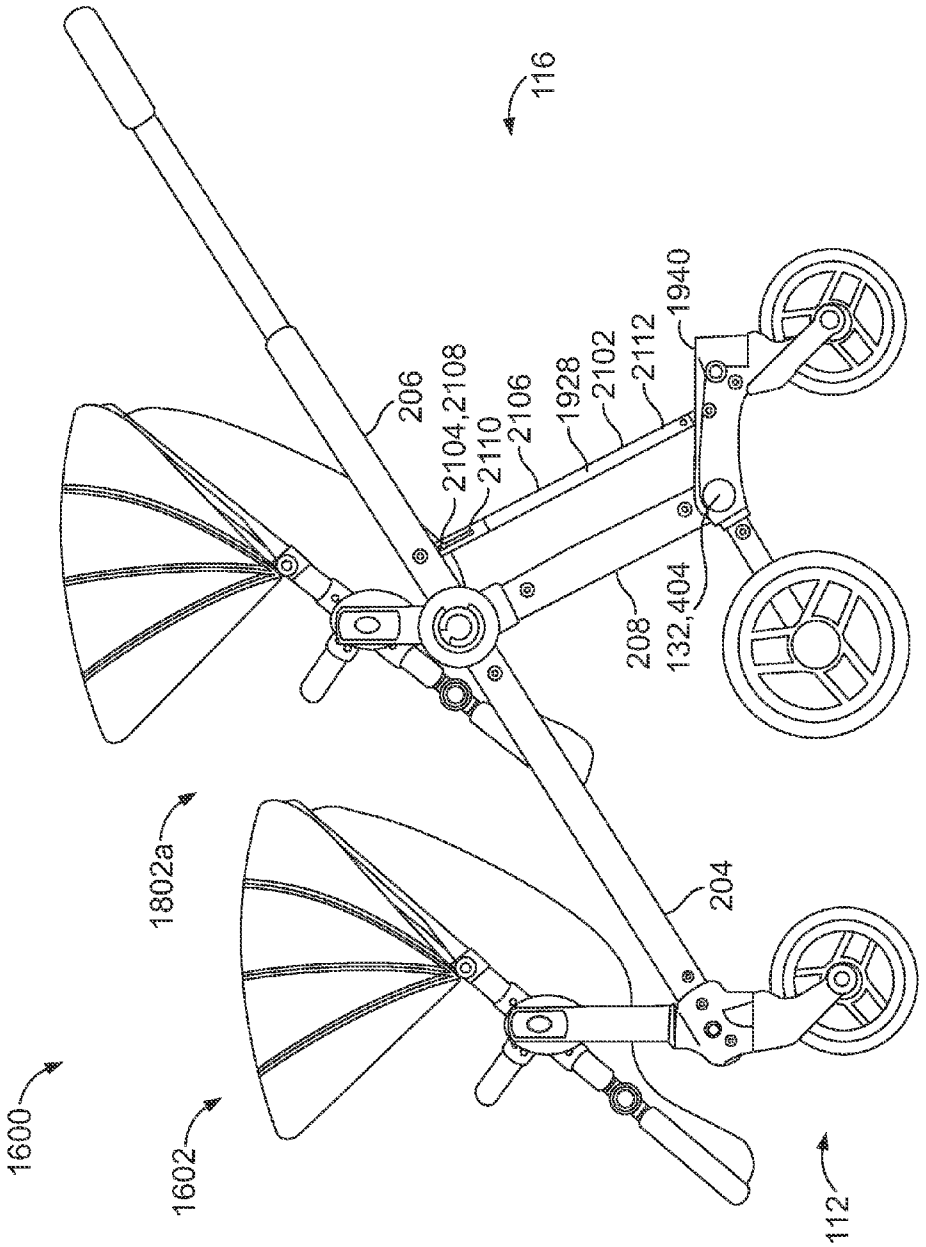
116
206
2104,2108
2110
2106
1928
2102
2112
1940
208
132,404
204
1802a
1600
1602
112

FIG. 21

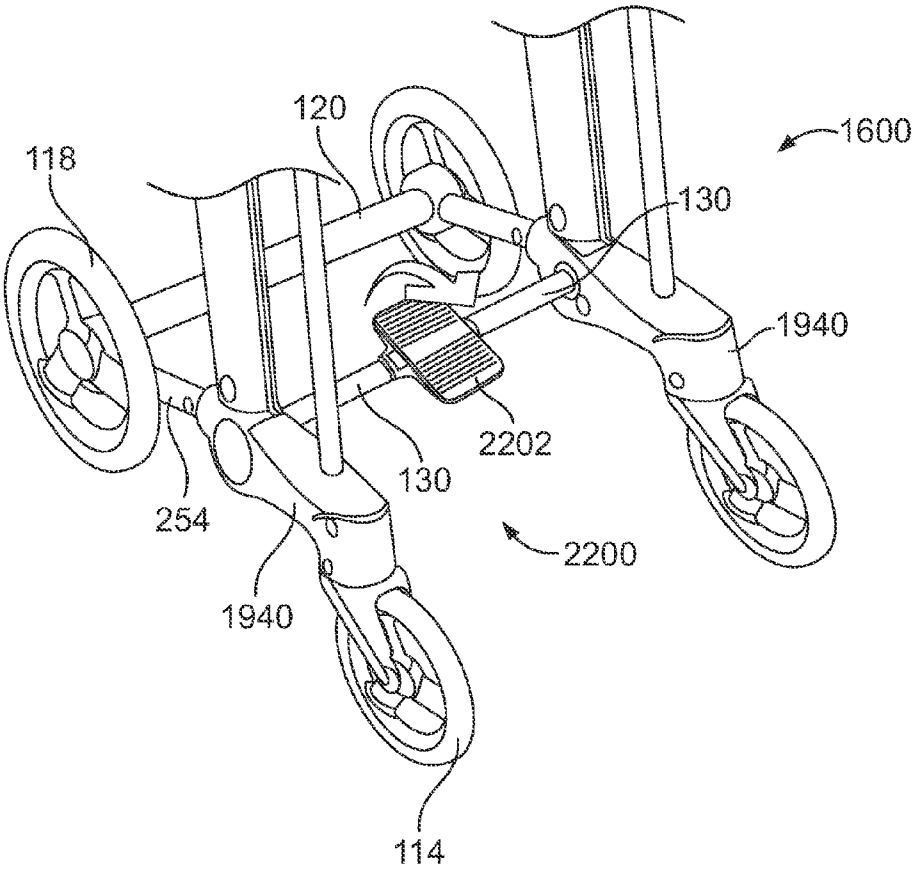

FIG. 22A

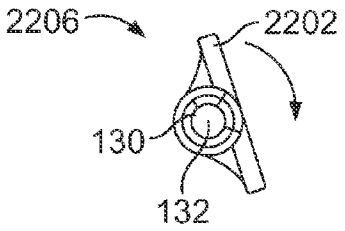

FIG. 22B

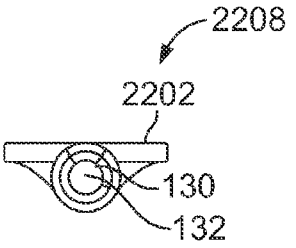

FIG. 22C

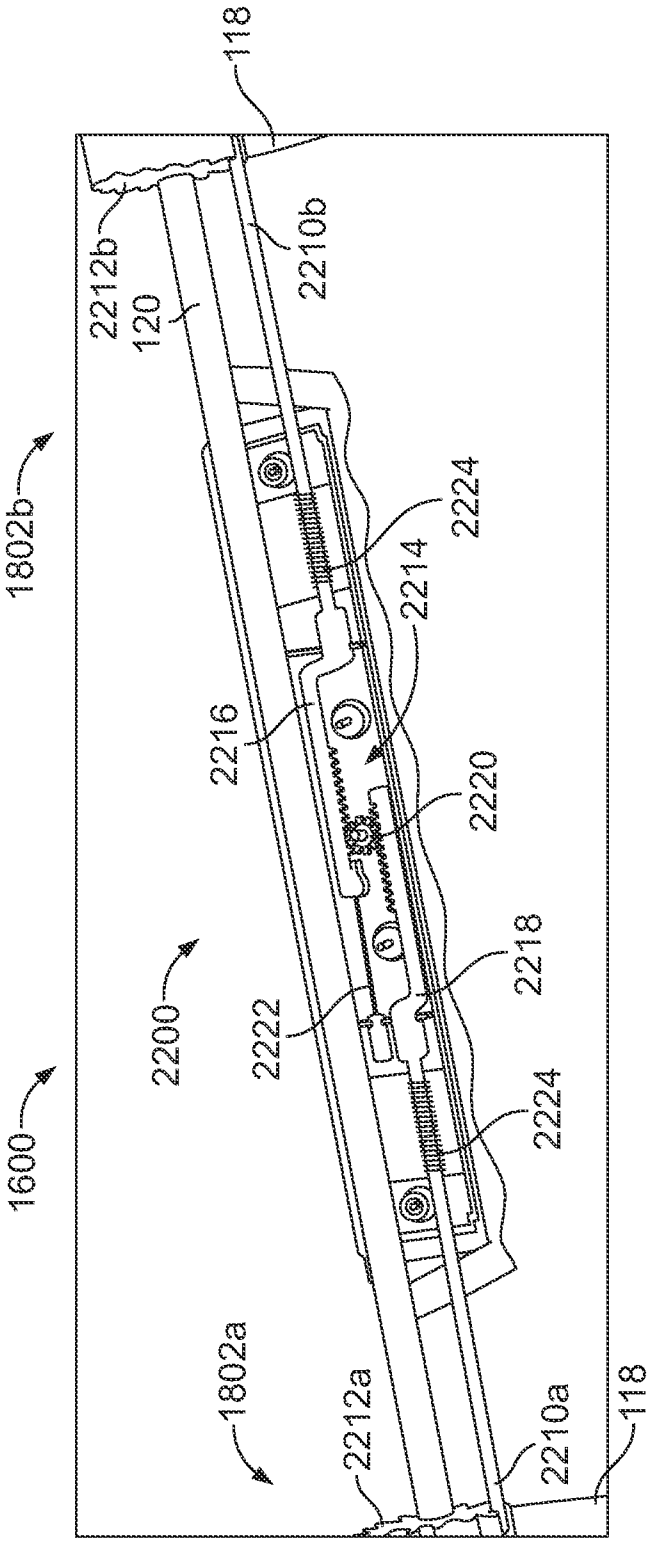
118
2212b
2210b
120
1802b
2224
2214
2216
2220
2200
2222
2218
1600
2224
1802a
2212a
2210a
118

FIG. 22D

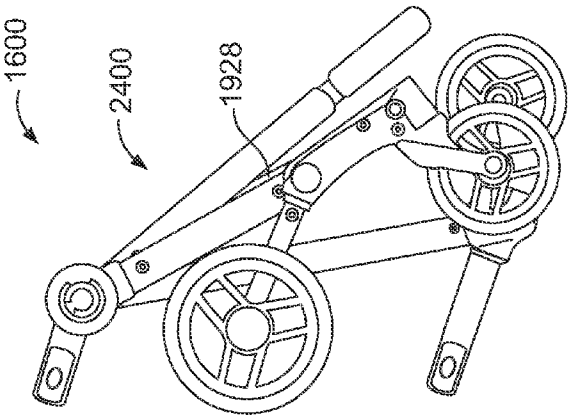

FIG. 24

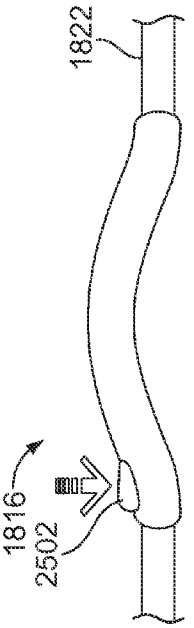

FIG. 25B

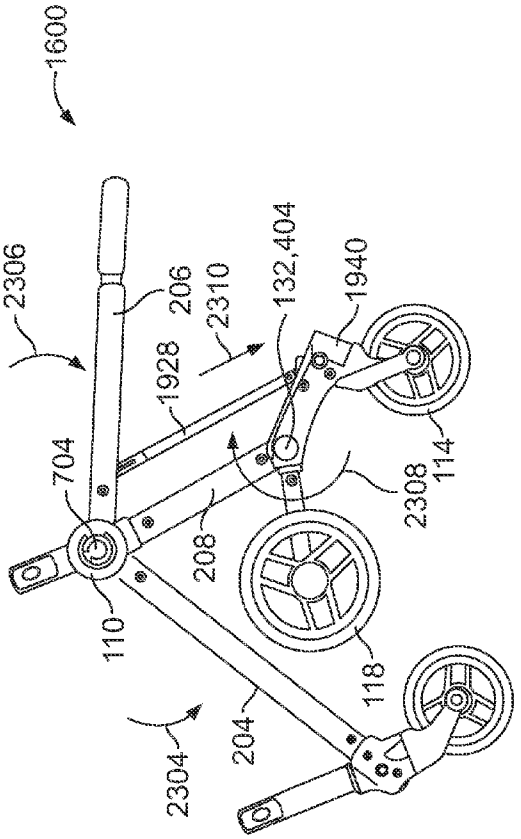

FIG. 23

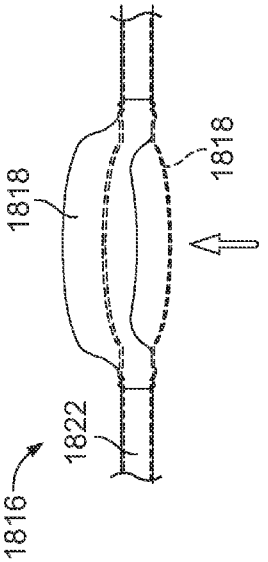

FIG. 25A

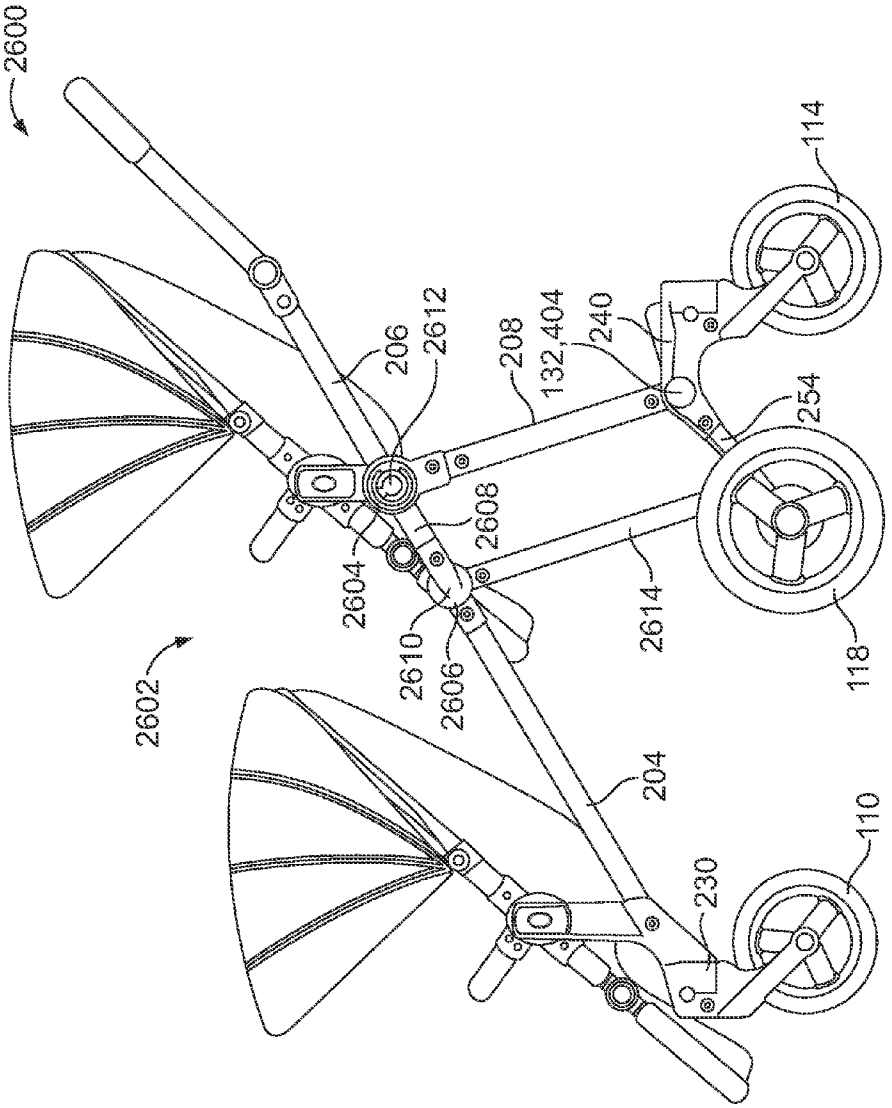
2600
2602
206
2612
208
132,404
240
114
254
2608
2604
2610
2606
2614
118
204
230
110

FIG. 26

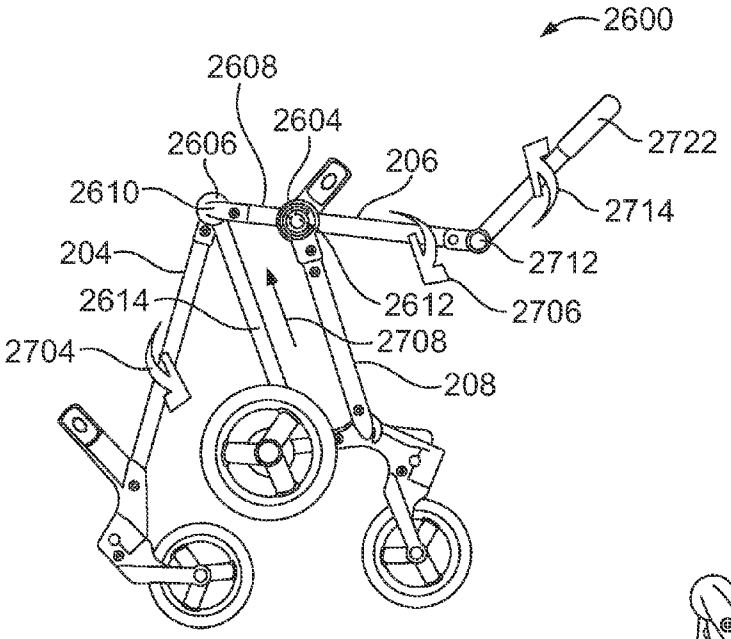
2600
2608
2604
2606
206
2722
2610
2714
204
2712
2614
2612
2706
2704
2708
208

FIG. 27

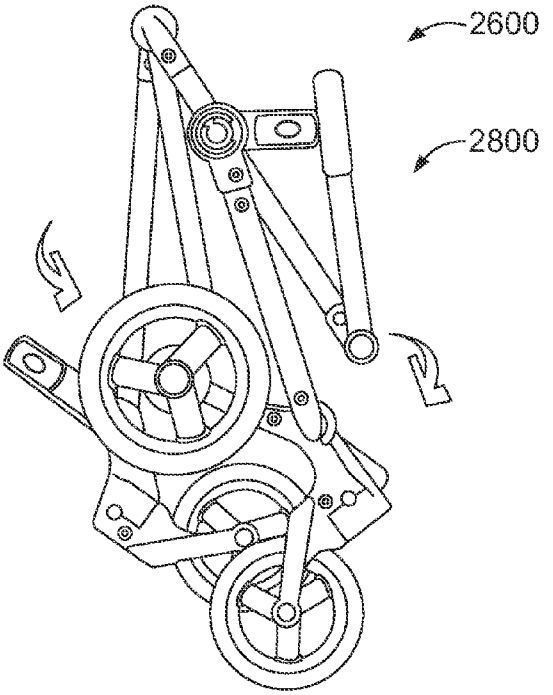
2600
2800

FIG. 28

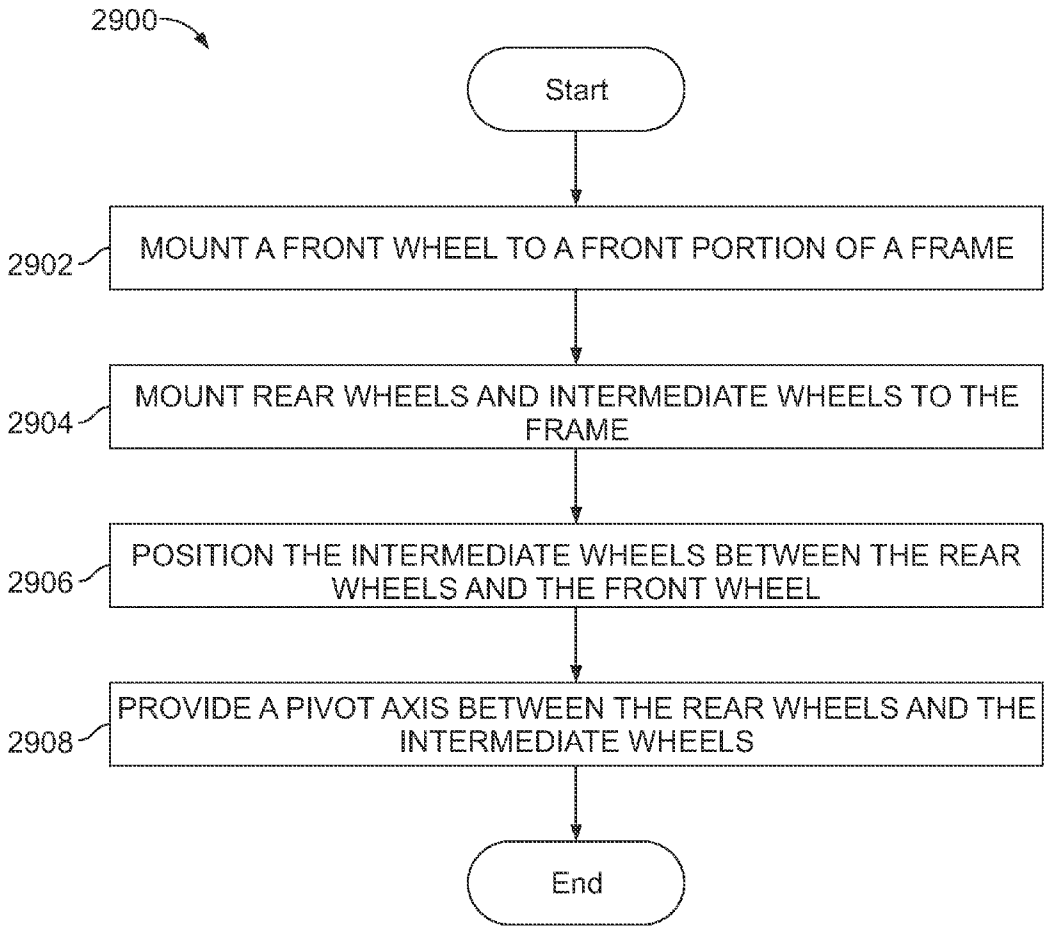
2900
Start
2902
MOUNT A FRONT WHEEL TO A FRONT PORTION OF A FRAME
2904
MOUNT REAR WHEELS AND INTERMEDIATE WHEELS TO THE FRAME
2906
POSITION THE INTERMEDIATE WHEELS BETWEEN THE REAR WHEELS AND THE FRONT WHEEL
2908
PROVIDE A PIVOT AXIS BETWEEN THE REAR WHEELS AND THE INTERMEDIATE WHEELS
End

FIG. 29

MANEUVERABLE STROLLERS

CROSS REFERENCE TO RELATED APPLICATION

This patent claims the benefit of U.S. Provisional Patent Application Ser. No. 61/749,728, filed Jan. 7, 2013, entitled "Maneuverable Strollers," which is hereby incorporated herein by reference in its entirety.

FIELD OF THE DISCLOSURE

The present disclosure relates generally to child care equipment and, more particularly, to maneuverable strollers.

BACKGROUND OF RELATED ART

Strollers are known in the art. Typically, known strollers include a foldable frame, wheels, and one or more seats to support a child or infant in a seated, prone, and/or lying position. Stroller frames are usually foldable in at least one direction to allow the stroller to collapse to a folded position.

BRIEF DESCRIPTION OF THE DRAWINGS

FIG. **1** is a perspective view of an example stroller constructed in accordance with the teachings disclosed herein.

FIG. **2** is a left side view of the example stroller of FIG. **1**.

FIG. **3** is a right side view of the example stroller of FIGS. **1** and **2**.

FIG. **4** is a side view of the example stroller of FIGS. **1-3** showing an example range of pivotal motion of the example stroller when all wheels of the example stroller are in engagement with a substantially even or level travel path.

FIG. **5**A is a partial perspective left side view of the example stroller of FIGS. **1-4**.

FIG. **5**B is a partial perspective right side view of the example stroller of FIGS. **1-4**.

FIG. **6** is a side view of the example stroller of FIGS. **1-4**, **5**A and **5**B showing a front wheel of the example stroller elevated relative to a rear wheel and an intermediate wheel of the example stroller.

FIG. **7** is a side view of the example stroller of FIGS. **1-4**, **5**A, **5**B and **6** showing the stroller partially collapsed.

FIG. **8** is a side view of the example stroller of FIGS. **1-4**, **5**A, **5**B, **6** and **7** showing the stroller fully collapsed.

FIGS. **9**A and **9**B illustrate an example seat mount disclosed herein.

FIG. **10** illustrates another example seat mount disclosed herein.

FIG. **11** illustrates another example stroller constructed in accordance with the teachings of this disclosure.

FIG. **12** is a side view of another example stroller constructed in accordance with the teachings of this disclosure.

FIG. **13** is a top plan view of an example handle of the example stroller of FIG. **12**.

FIG. **14** is a side view of a portion of a frame of the example stroller of FIGS. **12** and **13** in a partially collapsed state.

FIG. **15** is a side view of the example stroller of FIGS. **12-14**, showing the stroller fully collapsed.

FIG. **16** is a perspective view of another example stroller constructed in accordance with the teachings disclosed herein.

FIG. **17** is a side view of the example stroller of FIG. **16** having soft goods.

FIG. **18** is a top plan view of the example stroller of FIGS. **16** and **17**.

FIG. **19** is a left side view of the example stroller of FIGS. **16-18**, but having soft goods removed for clarity.

FIG. **20** is a right side view of the example stroller of FIGS. **16-19**.

FIG. **21** is a side view of the example stroller of FIGS. **16-20** showing an example suspension apparatus of the example stroller.

FIG. **22**A-**22**D illustrate an example brake mechanism of the example stroller of FIGS. **16-21**.

FIG. **23** is a side view of the example stroller of FIGS. **16-21** showing the stroller partially collapsed.

FIG. **24** is a side view of the example stroller of FIGS. **16-21** showing the stroller fully collapsed.

FIGS. **25**A and **25**B illustrate an example latch release mechanism of the example stroller of FIGS. **16-21**.

FIG. **26** is a side view of yet another example stroller constructed in accordance with the teachings of this disclosure.

FIG. **27** is a side view of the example stroller of FIG. **26** showing the stroller partially collapsed.

FIG. **28** is a side view of the example stroller of FIGS. **26** and **27** showing the stroller fully collapsed.

FIG. **29** depicts a flowchart of an example method to assemble an example stroller disclosed herein.

DETAILED DESCRIPTION

Example strollers disclosed herein improve stability, maneuverability and/or steering control of the stroller, and/or provide improved shock absorption relative to some known strollers. Example strollers disclosed herein enable a user to turn or pivot the example strollers within a tight turning radius. In some examples, the stroller can turn 360 degrees within its own overall length or dimensional envelope. To enable such turning, example strollers disclosed herein employ one or more intermediate, pivot-enabling, and/or enlarged wheels. In some examples an intermediate wheel (e.g., a central wheel) is disposed between one or more front wheels that support a front portion of a stroller frame and one or more rear wheels that support a rear portion of the stroller frame. A distance between the front wheels and the rear wheels substantially defines an overall length of the stroller. In some examples, the intermediate wheel is positioned substantially midway between the front and rear wheels and/or substantially below (e.g., directly below) a center of mass of the occupied stroller. In some examples, to further improve steering and/or maneuverability, the intermediate wheel is positioned closer to a rear wheel than a front wheel such that a distance between a center of the intermediate wheel and a center of the rear wheel is less than a distance between the center of the intermediate wheel and a center of the front wheel. In some examples, positioning the intermediate wheel closer to the rear wheel than to the front wheel facilitates lifting of a front end of the stroller when maneuvering the stroller over an obstacle such as, for example, a curb.

To improve control or maneuverability of the stroller when a front end of the stroller is lifted or elevated relative to a rear end of the stroller (e.g., when a front end of the stroller is lifted, pivoted or tilted to advance past a curb), example strollers disclosed herein employ a pivot or pivot axle. In some examples, the pivot is positioned between the rear wheel and the intermediate wheel. As a result, such example strollers include a frame which pivots relative to the intermediate wheel and the rear wheel when the front end of the stroller is lifted relative to a rear end of the stroller. Some such strollers employ a housing, carriage or carrier to couple the intermediate wheel and a rear wheel to a side frame assembly

of the frame. In some examples, the frame is coupled (e.g., pivotally coupled) to the pivot axle via, for example, a bushing. Alternatively, the frames of some example strollers disclosed herein are mounted to the pivot axle and the carriage, of some such example are coupled to the pivot axle via a bushing. The example carriages disclosed herein can cause the intermediate wheel and the rear wheel coupled thereto to pivot relative to the frame about the pivot provided by the pivot axle or axis.

Additionally or alternatively, for the purpose of providing greater stability, facilitate balancing, and/or facilitate lifting of a front end of the stroller, some example strollers disclosed herein employ a suspension apparatus. In some such examples, the suspension apparatus provides a reactive force toward a front end of the frame when the front end of the stroller is pivoted upward or away from a surface about the pivot provided by the pivot axis. As a result, the suspension apparatus reduces (e.g., significantly reduces or prevents) shifting of the stroller's weight toward the rear wheels. In other words, the suspension apparatus maintains a center of mass of the stroller within a perimeter defined by the intermediate wheels and the rear wheels when the front end of the stroller is pivoted about the pivot axis. The suspension apparatus of some such examples provides a reactive force (e.g., an increased force) toward the intermediate wheel and/or the rear wheel when the handle of the example stroller is moved or pivoted about the pivot axle to lift the front end of the stroller. As a result, the suspension apparatus of some such examples helps maintain the rear wheel and the intermediate wheel in engagement with a travel path or ground when the front wheel of the stroller is elevated or lifted relative to the rear wheel and the intermediate wheel. Helping to maintain the intermediate wheel and the rear wheel in engagement with the ground when the front end of the stroller is lifted helps prevent the stroller from tipping about one of the rear wheels.

For the purposes of facilitating or assisting folding of the stroller, some example strollers disclosed herein provide an auxiliary frame member or bar. In some such examples, the frame member is spaced away from a folding pivot of a frame of the stroller to cause the carriage and, thus, the intermediate wheel attached thereto to rotate relative to the frame to a stored position when the example stroller is folded to a collapsed position.

Some example strollers that improve stability, maneuverability and/or steering control of a stroller are disclosed in International Patent Application Serial Number PCT/US2011/062669, which is hereby incorporated herein by reference in its entirety.

FIG. **1** is a perspective view of an example stroller **100** constructed in accordance with the teachings disclosed herein. The example stroller **100** of FIG. **1** includes a frame **102** defining a seating area **104** to accommodate or support one or more child and/or infant seats **106**. To support the infant seats **106**, the frame **102** of the illustrated example includes one or more infant seats mounts **108**. More specifically, the infant seats **106** removably couple to the seat mounts **108** via an interface (e.g., a latch or connector) provided by the seats **106** and the seat mounts **108**. To remove the infant seats **106** from the seat mounts **108**, a connector defined by the interface is released via a release (e.g., a spring-loaded push button). Additionally or alternatively, the seat mounts **108** may be adjusted along the frame **102** to adjust a position of the infant seats **106** relative to the frame **102** and/or each other.

The frame **102** of the illustrated example is supported by one or more front wheels **110** at a front end **112** of the frame **102** and one or more rear wheels **114** at a rear end **116** of the frame **102**. The frame **102** of the illustrated example is assembled to form a structure which is intended to stay assembled in all phases of its use and storage. Additionally, for the purposes of improving maneuverability, control steering and/or to provide shock absorption, the frame **102** of the illustrated example employs one or more intermediate wheels **118** disposed between the front and rear wheels **110**, **114**. To provide shock absorption to the example stroller **100**, the intermediate wheels **118**, the front wheels **110** and/or the rear wheels **114** of the illustrated example may be implemented by air inflatable wheels composed of rubber. As shown in the illustrated example, a diameter of the intermediate wheels **118** is substantially similar or identical to a diameter of the front wheels **110** and the rear wheels **114**.

In the illustrated example of FIG. **1**, the intermediate wheels **118** are positioned closer to the rear wheels **114** than to the front wheels **110**. However, in other examples, the intermediate wheels **118** may be disposed at approximately a midpoint between the front and rear wheels **110**, **114**. Each intermediate wheel **118** of the illustrated example defines a pivot (e.g., a turning pivot point) providing structure disposed or positioned between the front and rear wheels **110**, **114**. Thus, in the illustrated example, each of the intermediate wheels **118** provides a pivot point for the stroller **100** that is offset or laterally spaced from the rear end **116** of the stroller **100** and/or the rear wheels **114**. Consequently, both the front end **112** of the stroller **100** and the rear end **116** of the stroller **100** are able to pivot or rotate in an arcuate path about the turning pivot or point provided by one of the respective intermediate wheels **118** when a user turns the stroller **100** of the illustrated example (e.g., by applying a sideways force to the stroller **100**) in a rightward direction, a leftward direction, and/or a 360 degree turn or circle while having all wheels **110**, **114** and **118** in engagement with the ground or travel surface.

As shown in the illustrated example, the intermediate wheels **118** are coupled to one another via an axle **120** and rotate about a common axis of rotation **120***a*. However, in other examples, the axle **120** may be removed to enable the intermediate wheels **118** to drive or rotate independently relative to each other. In addition, although the example stroller **100** includes two intermediate wheels **118**, other example strollers may employ only one intermediate wheel **118** or more than two intermediate wheels **118**. For example, the stroller **100** may include a third intermediate wheel disposed on the axle **120** between the first and second intermediate wheels **118**.

Because the intermediate wheels **118** are located substantially beneath (e.g., vertically aligned with) the seating area **104** of the stroller **100**, the intermediate wheels **118** absorb a substantial portion of a load provided by a child sitting in the infant seats **106** of the stroller **100** of the illustrated example. In other words, in the illustrated example, a load or weight of a child sitting in the seating area **104** is largely carried by the intermediate wheels **118** when a user turns the stroller **100** of the illustrated example. As a result, a load provided by the child rotates about a pivot point provided by one of the intermediate wheels **118**. In this manner, the combined load or weight of the stroller **100** and a child in the stroller **100** requires less force (or torque) to turn or pivot the stroller **100** then would be required by a stroller and a child of similar combined weight without the intermediate wheels **118**. Because the weight (or the center of mass) of a child in the stroller **100** of the illustrated example is close to the pivot axis or pivot point of the intermediate wheel **118**, the force or torque required to pivot or turn the stroller **100** of the illustrated example when a child is seated in the seating area **104** is relatively low. As a result, the stroller **100** of the illustrated

example can turn about a pivot point provided by either of the intermediate wheels **118** with a relatively tight turning radius and with relative ease. For example, the example stroller **100** of FIG. **1** can turn 360 degrees within its own length.

To enable a user to push, turn and/or tilt the stroller **100** of the illustrated example, the frame **102** includes a handle **122** having a grip **124** which a user may take hold of to move, control and/or steer the stroller **100**. Further, the handle **122** of the illustrated example is adjacent the rear wheels **114**. The stroller **100** of the illustrated example includes an auxiliary handle **122***a* having an auxiliary grip **124***a* to enable a child or person to take hold of the auxiliary grip **124***a* for support when walking along the stroller **100**. The auxiliary handle **122***a* typically is not used to maneuver the stroller **100**, but it could serve that purpose for some uses. The handle **122** is coupled to the frame **102** via a handle articulation hub or joint **126**, which enables adjustment of the handle **122** relative to the frame **102**.

As described in greater detail below, to further improve stability and/or facilitate balancing when maneuvering the stroller **100** over a curb or other obstacle, the example stroller **100** of the illustrated example employs a suspension apparatus **128**. More specifically, the example suspension apparatus **128** of FIG. **1** provides stability and/or facilitates balancing when the front end **112** of the stroller **100** is pivoted or tilted relative to the rear end **116** of the frame **102** via the handle **122** (e.g., the front end **112** is lifted in an upward direction relative to a support surface (e.g., the ground)). Additionally, as discussed in greater detail below in connection with FIGS. **2**, **3** and **4**, the example stroller **100** employs an axle **130** to enable the frame **102** to pivot about an axis **132** of the axle **130** when the front end **112** is elevated, tilted or raised from a travel surface relative to the rear wheels **114** and the intermediate wheels **118**.

FIG. **2** illustrates a first or left side view of the stroller **100**. FIG. **3** illustrates a second or right side view of the example stroller **100** of FIG. **1**. Referring to FIGS. **2** and **3**, the frame **102** of the illustrated example includes a first side frame assembly **202***a* laterally spaced from a second side frame assembly **202***b* to define the seating area **104**. The first and second side frame assemblies **202***a*, **202***b* of the illustrated example are substantially similar or identical and are symmetrical. The handle **122** of the illustrated example extends between the side frame assemblies **202***a*, **202***b* and may be formed from a single tube that is bent into a generally U-shaped structure.

Referring to FIGS. **2** and **3**, each of the side frame assemblies **202***a*, **202***b* of the illustrated example includes a lower frame support **204**, an upper frame support **206**, and an intermediate frame support **208**. In the illustrated example, the frame supports **204**, **206** and **208** have a substantially linear profile (e.g., a straight and/or flat profile). However, in other examples, the frame supports **204**, **206** and **208** may be any shape, including a generally curved shape or a shape having one or more curved and/or linear portions.

For the purpose of enabling the stroller **100** of the illustrated example to fold or collapse in at least one direction, the frame supports **204**, **206** and **208** of the first side frame assembly **202***a* are pivotally coupled via a first pivot connector or pivot joint **210***a*. More specifically, the connector or pivot joint **210***a* is defined by a hub **212***a* (e.g., a T-shaped hub) to receive a respective end of each of the frame supports **204**, **206** and **208** of the first side frame assembly **202***a*. The hub **212***a* of the illustrated example enables the frame supports **204**, **206** and **208** to pivot relative to each other to, for example, collapse the stroller **100** as discussed in greater detail below. Similarly, the frame supports **204**, **206** and **208** of the second side frame assembly **202***b* are pivotally coupled at a second pivot connector or pivot joint **210***b*. More specifically, the connector or pivot joint **210***b* is defined by a hub **212***b* (e.g., a T-shaped hub) to receive a respective end of each of the frame supports **204**, **206** and **208** of the second side frame assembly **202***b*. Like the hub **212***a*, the hub **212***b* enables the frame supports **204**, **206** and **208** of the second side frame assembly **202***b* to pivot relative to each other.

Referring to FIG. **3**, each of the hubs **212***a*, **212***b* of the illustrated example includes a first leg or opening **214***a* to receive or couple to a first end **204***a* of the lower frame support **204**, a second leg or opening **214***b* to receive or couple to a first end **206***a* of the upper frame support **206**, and a third leg or opening **214***c* to receive or couple to a first end **208***a* of the intermediate frame support **208**. In this example, the hubs **212***a*, **212***b* also include a fourth leg or opening **214***d* to receive an end of the auxiliary handle **122***a*. The legs **214***a-c* enable the frame supports **204**, **206** and **208** to pivot relative to each other about the respective pivot connectors **210***a*, **210***b* when a locking mechanism (e.g., a latch) of the hubs **212***a*, **212***b* is in a released or unlocked condition. When the locking mechanism of the hubs **212***a*, **212***b* is in a locked condition, the frame supports **204**, **206** and **208** cannot rotate or pivot relative to each other about the respective pivot connectors **210***a*, **210***b*. The locking mechanism of the hubs **212***a*, **212***b* may be moved to an unlocked condition via a release actuator **216** positioned on the upper frame support that may be activated by a user.

Referring to FIG. **2**, when the frame **102** is erected, the lower frame support **204** and the upper frame support **206** of the first side frame assembly **202***a* are substantially aligned or parallel relative to each other such that an axis **218** of the lower frame support **204** is substantially aligned with an axis **220** of the upper frame support **206**. However, in other examples, the lower frame support **204** may be positioned at any angle relative to the upper frame support **206** when the frame **102** is in the erected state. For example, an angle **222** between the axis **218** of the lower frame support **204** and the axis **220** of the upper frame support **206** may be between approximately 100 degrees and 200 degrees.

The intermediate support frame **208** of the illustrated example projects from the respective hubs **212***a* and **212***b* toward the rear wheels **114**. To enable the frame **102** to pivot relative to the intermediate wheels **118** and/or the rear wheels **114**, the intermediate frame support **208** is pivotally coupled to the axle **130** (FIG. **1**). More specifically, in the illustrated example, a second end **208***b* of the intermediate frame support **208** is coupled to the axle **130** (FIG. **1**) via a connector or bushing **211**. The busing **211** of the illustrated example, which includes a portion coaxially coupled to the axle **130**, enables the intermediate frame support **208** and, thus, the lower and upper frame supports **204**, **206** to pivot about the axis **132** of the axle **130**.

When coupled to the respective pivot joint **110***a* and the axle **130**, the intermediate frame support **208** of the illustrated example is substantially perpendicular to the lower frame support **204** and the upper frame support **206**. In other words, an axis **224** defined by the intermediate frame support **208** is at a substantial ninety degree angle relative to the axis **218** of the lower frame support **204** and the axis **220** of the upper frame support. However, in other examples, the intermediate frame support **208** may be at any different angle relative to the lower frame support **204** and/or the upper frame support **206**. For example, an angle **226***a* between the axis **224** of the intermediate frame support **208** and the axis **218** of the lower frame support **204** and/or an angle **226***b* between the axis **224** of the intermediate frame support **208** and the axis **220** of the

upper frame support **206** may be may be any other suitable angle that is less than ninety degrees or greater than ninety degrees.

Referring to FIGS. **2** and **3**, to mount or attach the front wheels **110** of the illustrated example to respective ones of the side frame assemblies **202***a*, **202***b*, each of the front wheels **110** of the illustrated example includes a front wheel housing **230**. For example, the front wheel housing **230** may be coupled or attached to an end of the lower frame support **204**. Each front wheel housing **230** of the illustrated example includes a fork or wheel support **232** rotatably mounted to a connector **234**. Each front wheel **110** is rotatably journalled to the wheel support **232** to enable each of the front wheels **110** to rotate independently about a separate axis of rotation **236***a*, **236***b* (e.g., a substantially horizontal axis relative to a level ground surface on which the stroller **100** is positioned). Additionally, to improve steering, each of the front wheels **110** of the illustrated example is able to rotate, swivel or pivot about a corresponding substantially vertical axis **238***a*, **238***b* that is substantially perpendicular to the corresponding axis of rotation **236***a*, **236***b*. In the illustrated example, the front wheels **110** are able to pivot about the corresponding vertical axis **238***a*, **238***b* due to a pivot connector between the corresponding wheel support **232** and the corresponding connector **234**.

To mount or attach the rear wheels **114** and the intermediate wheels **118** to the respective side frame assemblies **202***a*, **202***b*, each of the side assemblies **202***a*, **202***b* of the illustrated example employs a housing or carriage **240** (e.g., a boogie). The carriage **240** of the illustrated example is a unitary body or structure. More specifically, the carriage **240** of the illustrated example includes or defines a hub **242** that attaches or couples the rear wheels **114** and the intermediate wheels **118** to the frame **102**. In the illustrated example, the axle **130** is journalled on the carriage **240**. The example carriage **240** can pivot relative to the frame **102** and/or the intermediate frame support **208**. Each hub **242** of the illustrated example includes a first portion or leg **242***a* to receive or couple to a respective one of the rear wheels **114** and a second portion or leg **242***b* to receive or couple to a respective one of the intermediate wheel **118**.

For example, the first portion **242***a* of the example carriage **240** receives a rear wheel housing **244** having a fork or rear wheel support **246** rotatably mounted to a connector **248** that is mounted (e.g., via a screw) or integrally formed with the carriage **240**. Each rear wheel **114** is rotatably mounted to the rear wheel support **246** to enable each of the rear wheels **114** to rotate independently about a separate axis of rotation **250***a*, **250***b* (e.g., each of which is a substantially horizontal axis relative to a level ground surface on which the stroller is positioned). Additionally, to improve steering, each of the rear wheels **114** of the illustrated example is able to rotate, swivel or pivot about a substantially vertical axis **252***a*, **252***b* substantially perpendicular to the respective axis of rotation **250***a*, **250***b*. In the illustrated example, the rear wheels **114** are able to pivot about the respective vertical axis **252***a*, **252***b* because of a pivot connector between the corresponding wheel support **246** and/or carriage **240** and the corresponding connector **248**.

In the illustrated example, each intermediate wheel **118** is coupled to the respective carriage **240** via an arm or frame member **254**. In the illustrated example, a first end **254***a* of the arm **254** is coupled or fixed to the second portion **242***b* of the carriage **240** and a second end **254***b* of the arm **254** defines or is coupled to a hub **256** of the intermediate wheel **118**. The arm **254**, when coupled to the carriage **240**, projects from the carriage **240** in a direction away from the rear wheels **114** and toward the front wheels **110** to position the intermediate wheels **118** between the rear wheels **114** and the front wheels **110**. As shown in the illustrated example, the arms **254** position the intermediate wheels **118** closer to the rear wheels **114** than to the front wheels **110**. However, in other examples, the arm **254** may be configured to position the intermediate wheels **118** at approximately a midpoint between the axis of rotation **236***a*, **236***b* of the front wheels **110** and the axis of rotation **250***a*, **250***b* of the rear wheels **114**. A central axis **258** (FIG. **2**) of the arm **254** of the illustrated example is at an angle **260** (e.g., substantially perpendicular) relative to the central axis **224** of the intermediate frame support **208**. As described in greater detail below, the angle **260** varies when the intermediate frame support **208** and/or the frame **102** pivots relative to the carriage **240** about the axis **132** defined by the axle **130**.

As noted above, the intermediate wheels **118** of the illustrated example are mounted on the axle **120** (FIG. **1**) extending between the side frame assemblies **202***a*, **202***b*. Thus, the axle **120** rotatably couples the intermediate wheels **118**. As a result, the intermediate wheels **118** of the illustrated example rotate about the axis of rotation **120***a* of the axle **120**. However, while the intermediate wheels **118** of the illustrated example are able to rotate about the axis of rotation **120***a*, the intermediate wheels **118** are fixed against swiveling or pivoting in other directions (e.g., unlike the front and rear wheels **110**, **114**, the intermediate wheels **118** cannot rotate about a substantially vertical axis **264***a*, **264***b* substantially perpendicular to the respective axis of rotation **120***a*). As a result, the intermediate wheels **118** of the example stroller **100** of FIG. **1** provide resistance to lateral drifting of the stroller **100** when the stroller **100** is moving or being pushed in a substantially straight path. However, in other examples, the intermediate wheels **118** can swivel about the vertical axis **264***a*, **264***b* relative to the frame **102**.

As noted above, the intermediate wheels **118** of the illustrated example define pivots or points around which the stroller **100** of the illustrated example may be turned. In other words, each intermediate wheel **118** of the illustrated example defines a pivot point disposed between the front and rear wheels **110**, **114**. For example, when applying sufficient force to the handle **122** of the stroller **100** of the illustrated example in a leftward direction relative to the orientation of a user standing behind the stroller and gripping the handle **122** (e.g., a clockwise direction looking down from above the stroller **100**), the stroller **100** pivots about the (right side) intermediate wheel **118** of the second side frame assembly **204***b* such that the front wheels **110** move along an arcuate path in a direction toward the second side frame assembly **202***b* and the rear wheels **114** move along an arcuate path in a direction toward the first side frame assembly **202***a*. Likewise, when a user applies a force to the handle **122** of the stroller **100** in a rightward direction relative to the orientation of a user gripping the handle **122** (e.g., a counterclockwise direction looking from above the stroller **100**), the stroller **100** of the illustrated example pivots about the (left side) intermediate wheel **118** of the first side frame assembly **202***a* such that the front wheels **110** move along an arcuate path in a direction toward the first side frame **202***a* and the rear wheels **114** move along an arcuate path in a direction toward the second side frame assembly **202***b*. In some examples, the stroller can turn 360 degrees within its own overall length or dimensional envelope.

FIG. **4** is a side view of the example stroller **100** of FIGS. **1**-**3**. In the illustrated example of FIG. **4**, the carriage **240** of the first side frame assembly **202***a* is coupled or mounted to the frame **102** via a first end of the axle **130** (FIG. **1**). The carriage **240** of the second side frame assembly **202***b* is sub-

stantially identical to the carriage **240** of the first side frame assembly **202***a* and is mounted to a second end of the axle **130** in the same manner as the carriage **240** of the first side frame assembly **202***a*. Thus, the following description will focus on one carriage to serve as the description for both carriages **240**. The carriage **240** and, thus, the intermediate wheels **118** and the rear wheels **114** that are attached thereto can pivot about the axis **132** defined by the axle **130** relative to the intermediate frame support **208** (e.g., via a bushing). As a result, the intermediate frame support **208** and/or the carriages **240** of the respective left and right side frame assemblies **202***a* and **202***b* can pivot relative to each other about a pivot **404** defined by the axle **130** and/or the axis **132** (FIG. **1**). For example, the intermediate frame support **208**, the frame **102** and/or the carriages **240** can pivot in a rotational direction **402** about a pivot point **404** defined by the axis **132** (e.g., a clockwise and counterclockwise rotation about the axis **132**). Although the carriage **240** of the first side frame assembly **202***a* can pivot relative to the carriage **240** of the second side frame assembly **202***b* about the axis **132** defined by the axle **130**, the axle **120** (FIG. **1**) extending between the intermediate wheels **118** connects or couples the respective intermediate wheels **118** of each carriage **240**. As a result, the carriage **240** of the first side frame assembly **202***a* and the carriage **240** of the second side assembly **202***b* of the illustrated example rotate or pivot together about the axis **132**. However, in examples in which the axle **120** is not used, the carriage **240** of the first side frame assembly **202***a* can rotate or pivot independently about the axis **132** relative to the carriage **240** of the second side frame assembly **202***b* and/or the intermediate frame support **208**.

The pivot point **404** of the illustrated example is positioned between the intermediate wheels **118** and the rear wheels **114**. In particular, the pivot point **404** is positioned between the axis of rotation **120***a* of the intermediate wheels **118** and the axis of rotation **250***a*, **250***b* of the rear wheels **114**. Also, in this example, the pivot **404** is offset relative (e.g., positioned at least above) the axes of rotation **120***a* and **250***a*, **250***b*. As a result, the intermediate wheels **118** and the rear wheels **114** can pivot relative to the frame **102** to move and/or follow a contoured travel surface. Thus, some contour variations in a travel surface that may cause the front end **112** to lift or elevate (or, alternatively, lower) relative to the rear end **116** will not cause the intermediate wheels **118** and/or the rear wheels **114** to disengage or lift-off the travel surface. For example, the stroller **100** of the illustrated example of FIG. **4** is shown being moved or shifted to a first position **406** from an initial position **408** illustrated via a shadow line. In other words, the angle **260** between the axis **258** of the arm **254** and the intermediate frame support **208** varies between a first angle **410** when the frame **102** is in the initial position **408** and a second angle **412** when the frame **102** is in the first position **406** as the frame **102** pivots or tilts about the pivot **404**.

To limit the angle **260** that the intermediate frame support **208** can pivot relative to the carriage **240** (e.g., the angle between the intermediate frame support **208** and the arm **254**), the stroller **100** of the illustrated example employs one or more travel limits. In the illustrated example, the travel limits are physical obstructions (e.g., stops) that are engaged by the intermediate frame support **208** and/or the arm **254** to block further rotational movement in a respective direction. The stroller **100** of the illustrated example employs a travel limit **403** positioned on the axle **130** to limit the angle **260** that the intermediate frame support **208** can pivot relative to the carriage **240** or the arm **254** in a first rotational direction **404***a* (e.g., a clockwise direction). For example, the angle **260** between the axis **224** of the intermediate frame support **208** and the arm **254** may be limited to approximately between 0 and 120 degrees. In other examples, the travel limit **403** may be positioned on the carriage **240** and/or the intermediate frame support **208**. In some examples, two travel limits may be employed to limit the angle **260** that the intermediate frame support **208** can pivot relative to the carriage **240** or the arm **254**. Other locations, members and/or configurations of the travel limits are employed in other examples.

FIGS. **5**A and **5**B illustrate partial, rear perspective views of the respective side frame assemblies **202***a*, **202***b*. Referring to FIGS. **5**A and **5**B, to further help support the frame **102** when the frame **102** is pivoted about the pivot **404**, the stroller **100** of the illustrated example employs the suspension apparatus **128**. The example suspension apparatus **128** of the illustrated example is a torsion spring **502** coupled to the axle **130**, the intermediate frame support **208** and/or the busing **211**. For example, the first side frame assembly **202***a* of FIG. **5**A includes a first torsion spring **502** and the second side frame assembly **202***b* of FIG. **5**B has a second torsion spring **502**. Each of the torsion springs **502** has a first portion **502***a* coupled or engaged by the intermediate frame support **208** and a second portion **502***b* coupled or fixed to the axle **130**. As a result, rotation of the intermediate frame **208** about the axis **132** in the direction **402***a* causes the first portion **502***a* of each torsion spring **502** to move relative to the second portion **502***b* of the torsion spring **502**, thereby increasing a tension or a force provided by each torsion spring **502**. In other examples, the torsion spring **502** is a unitary spring that extends along the length of the axle **130** having respective ends coupled to the first and second side frame assemblies **202***a*, **202***b* (e.g., the intermediate frame supports **208**, the carriages **240**, etc.). In other examples, the suspension apparatus **128** may be a leaf spring and/or a torsion bar coupled to the axle **130**, a fluid cylinder positioned between the upper frame support **206** and the carriage **240**, and/or any other suspension apparatus that provides a reactive force or an increased force when the handle **122** of the stroller **100** is moved or pivoted toward the rear wheels **114** about the pivot **404**.

The example carriage **240** of the illustrated example also supports a portion of the brake apparatus. The brake apparatus of the example stroller **100** is selectively movable between a locked position to prevent or restrict rotation of the respective intermediate and rear wheels **118** and/or **114** and an unlocked position to enable rotation of the intermediate and rear wheels **118** and/or **114**. To move the brake apparatus between the locked and unlocked positions, the stroller **100** of the illustrated example employs a brake lever or foot pedal **504** supported by the carriage **240**. The brake lever **504** of the illustrated example is depressible relative to the carriage **240** to frictionally engage or imped rotation of the respective rear wheels **114** about their axis of rotation **250***a*, **250***b*.

FIG. **6** is a side view of the example stroller **100** of FIGS. **1**-**4**, **5**A and **5**B having the front end **112** of the frame **102** lifted or tilted upward relative to the rear end **116** of the frame **102**. More specifically, the front wheels **110** in the illustrated example of FIG. **6** are positioned on an elevated surface **602** relative to a surface **604** on which the intermediate wheels **118** and the rear wheels **114** are positioned. In the illustrated example, the elevated surface **602** may be a top surface of a curb **606** or step. Further, as noted above in connection with FIG. **4**, the travel limit **403** employed to limit the rotational distance the intermediate frame support **208** may pivot about the axle **130** (e.g., a five degree rotation) is sufficient to enable the front end **112** of the stroller **100** to overcome (e.g., reach the top of) the curb **606** (e.g., a height of 5 inches) while the intermediate and rear wheels **118**, **114** remain on the lower surface **604**.

When the front end **112** of the frame **102** is pivoted upward about the pivot **404** (e.g., in a clockwise direction about the pivot **404**), the suspension apparatus **128** provides a reactive torque or force (e.g., an increased force) toward the front end **112** to enhance stability. To enhance stability, the suspension apparatus **128** generally dampens or distributes a downward force applied to the handle **122** between the side frame assemblies **202***a*, **202***b* and supports a weight of the stroller **100** that may otherwise shift toward the rear end **116** of the frame **102** (e.g., away from the intermediate wheels **118**) when the intermediate frame support **208** moves about the pivot **404** in a direction **608** when the front end **112** of the stroller **100** is lifted, pivoted or tilted (e.g., to advance past the curb or step **606**). For example, the reactive force or torque provided by the suspension apparatus **128** resists (e.g., significantly reduces or prevents) a shift of the center of mass of the stroller **100** (e.g., the weight of the stroller and/or a child in the seating area **104**) away from the intermediate wheels **118** and toward the rear wheels **114** when the front end **112** of the frame **102** is pivoted or tilted about the pivot **404**. In other words, the reactive force maintains or positions the center of mass of the stroller **100** substantially aligned and/or adjacent the intermediate wheels **118**. To facilitate control of the stroller **100** when the front end **112** of the stroller **100** is tilted upward relative to the rear end **116** of the frame **102**, the suspension apparatus **128** helps maintain or position the center of mass of the stroller **100** between the axis of rotation **250***a*, **250***b* of the rear wheels **114** and the axis of rotation **120***a* of the intermediate wheels **118**.

As a result, in addition to a load provided by a child in the seating area **104** (FIG. **1**), the suspension apparatus **128** provides an effective downward biasing force to the intermediate wheels **118** and/or the rear wheels **114**. In this manner, the suspension apparatus **128** facilitates balancing and/or improves stability of the stroller **100** by helping to maintain the intermediate wheels **118** and/or the rear wheels **114** in engagement and/or in contact with a travel path or the surface **604** (e.g., the ground) when the front wheels **110** are elevated or lifted off of the surface **604** relative to the rear wheels **114** and the intermediate wheels **118**. Maintaining the intermediate wheels **118** and the rear wheels **114** in engagement with the surface **604** when the front end **112** of the stroller **100** is lifted helps prevent the stroller **100** from tipping about one of the rear wheels **114** (e.g., torqueing to the side). Absent the suspension apparatus **128**, a user would need to apply a greater force to balance the stroller **100** and maintain the intermediate wheels **118** and the rear wheels **114** in contact with the ground when the front end **112** of the stroller **100** is lifted (e.g., in an upward direction) relative to the rear end **116**.

The intermediate wheels **118** of the illustrated example do not substantially increase the overall dimensional envelope of the stroller **100**. In particular, the intermediate wheels **118** do not significantly affect the ability of the stroller **100** of the illustrated example to collapse with a compact profile. FIGS. **7** and **8** illustrate the example stroller **100** of FIG. **1** being folded from an in-use unfolded position shown in FIGS. **1-6** to a collapsed, folded, or storage position **800** shown in FIG. **8**. As noted above, the side frame assemblies **202***a*, **202***b* are constructed such that the entire stroller **100** of the illustrated example is selectively moveable between an extended, unfolded, in-use position (FIGS. **1-6**) and a collapsed, folded, or storage position **800** (FIG. **8**). The stroller **100** of the illustrated example has a low profile or compact dimensional envelope when the stroller **100** is in the collapsed position **800**. The intermediate wheels **118** of the illustrated example do not significantly increase the overall dimensional envelope of the stroller **100** of the illustrated example when the stroller **100** is in the unfolded position (FIGS. **1-6**) and/or the folded position **800** (FIG. **8**). Further, the intermediate wheels **118** do not interfere with folding the stroller **100** to the folded position **800**.

To maintain the stroller **100** in the use or unfolded position, each of the hubs **212***a*, **212***b* of the stroller **100** of the illustrated example include a latch mechanism. The latch mechanism of the illustrated example includes a latch plate secured by a detent, a lock, spring, and/or any other mechanism to lock and maintain the frame **102** of the illustrated example in the in-use position. Any known latch may be used in this role. The latch mechanism employed is immaterial to this disclosure. The latch mechanism maintains the hubs **212***a*, **212***b* and, thus, the frame supports **204**, **206** and **208** in a locked condition to prevent rotation of the frame supports **204**, **206** and **208** relative to each other (to thereby prevent the stroller **100** from collapsing). To collapse the stroller **100** of the illustrated example, the release **216** is activated (e.g., slid and/or depressed) to unlock the latch mechanism and enable the respective portions **214***a-c* of the hubs **212***a*, **212***b* to rotate relative to each other. More specifically, in the unlocked condition, the frame supports **204**, **206** and/or **208** are freed to rotate or pivot relative to each other about a pivot **704** provided by the pivot connectors **210***a*, **210***b*. In the illustrated example, the lower and upper frame supports **204**, **206** of the illustrated example pivot toward the intermediate frame support **208** in the direction shown by the respective arrows **706** and **708** into the configuration illustrated in FIGS. **7** and **8**. Further, the carriage **240** of the illustrated example also rotates toward the intermediate frame support **208** in a direction represented by arrow **710** when folding the stroller **100** to the folded position **800**. Rotation of the carriage **240** in the direction arrow **710** is not hindered by the travel limit **403** discussed above. Instead, as noted above, the travel limit **403** restricts rotation of the carriage **240** in the direction **403***a*, which is opposite direction of arrow **710**.

As shown in FIG. **8**, in the fully collapsed, folded or storage position **800**, the stroller **100** of the illustrated example has a relatively low profile or dimensional envelope and a relatively small profile. In the folded position **800**, an axis **802** of the rear wheel housing **244** is substantially aligned (e.g., slightly offset) relative to the axis **224** of the intermediate frame support **208**. While a collapsible frame **102** is shown, in some examples the stroller does not collapse.

In some examples, the seat mounts **108** may be folded relative to the frame **102** prior to or after the stroller **100** is in the folded position **800**. For example, FIGS. **9**A and **9**B illustrate example seat mounts **108** that fold relative to the frame **102**. The seat mounts **108** of the illustrated example are pivotally coupled or attached to a connector or housing **902** and/or the frame **202** of the stroller **1000**. Each of the seat mounts **108** of the illustrated example pivots relative to the connector **902** or frame **202** about a pivot point **904** between a first upright or in use position **906** and a second or lowered folded position **908**. In the illustrated example of FIG. **9**B, in the first position **906**, a latch **910** (e.g., a protruding member or tab) of the seat mount **108** engages an opening or recess **912** in the frame **202** to lock or restrict rotation of the seat mount **108** relative to the frame **202** and/or the connector **902** about the pivot point **904**. To fold the seat mount **108**, the latch **910** is moved or withdrawn from the recess **912** to enable rotation of the seat mount **108** relative to the frame **202** and/or the connector **902**. In the folded position **908**, the latch **910** engages a second recess **914** to prevent the seat mount **108** from inadvertently or unintentionally pivoting about the pivot point **904** when the stroller **100** is in the collapsed state **800**.

In some examples, the seat mounts **108** may be removed relative to the frame **102** prior to or after the stroller **100** is in the folded position **800**. For example, FIG. **10** illustrates the example seat mounts **108** being removed from an opening or pocket **1002** of the connector **902** or the frame **202**. To remove the seat mounts **108** from the connector **902** and/or the frame **102**, a lock or latch mechanism securing the seat mounts **108** to the connector **902** and/or the frame **102** is released and the seat mount **108** is removed from the opening **1002**.

FIG. **11** illustrates another example stroller **1100**. The example stroller **1100** of FIG. **11** is substantially similar or identical to the stroller **100** of FIGS. **1-8**. However, unlike the stroller **100** of FIG. **1**, the example stroller **1100** of FIG. **11** has only one infant seat **106**. In some examples, the stroller **100** of FIG. **1** may be configured or converted to the stroller **1100** of FIG. **11**. For example, one of the seats **106** of FIG. **1** may be removed from the frame **102** and the seat mounts **108** associated with the removed infant seat **106** may be removed from the frame **102**. In the examples of FIGS. **1-11**, the seat mounts **108** are bayonet-type mounts.

FIG. **12** illustrates another example stroller **1200**. Those components of the example stroller **1200** that are substantially similar or identical to the components of the example stroller **100** of FIGS. **1-8** described above and that have functions substantially similar or identical to the functions of those components will not be described in detail again below. Instead, the interested reader is referred to the above corresponding descriptions. To facilitate this process, similar reference numbers will be used for like structures. For example, in the illustrated example of FIG. **12**, the example stroller **1200** includes a frame **1202** having one or more front wheels **110** to support a front end **112** of the frame **102** and one or more rear wheels **114** to support a rear end **116** of the frame **102**. The frame **1202** of the illustrated example includes a first side frame assembly and a second side frame assembly laterally spaced from each other to accommodate one or more infant seats **106** extending between the side frame assemblies. Each of the side frame assemblies includes a lower frame support **204**, an upper frame support **206** and an intermediate frame support **208** pivotally coupled about a pivot **704** provided by a pivot connector **210**. A carriage or housing **240** pivotally couples an intermediate wheel **118** and a rear wheel **114** about a pivot point **404** provided by an axle **130** extending between the side frame assemblies of the frame **1202**.

The example stroller **1200** of FIG. **12** has a frame **1202** that is substantially similar or identical to the frame **102** of the example stroller **100** of FIGS. **1-8**. However, the stroller **1200** of the illustrated example of FIG. **12** has a different handle **1222**. The handle **1222** may articulate between a first or upper position **1204** and a second or lower position **1206** relative to the upper frame support **206**. To enable articulation of the handle **1222** relative to the upper frame support **206**, the example stroller **1200** employs a pivot joint or articulation hub **1208**. The hub **1208** employs a latch mechanism to lock or maintain a position of the handle **1222** between the upper and lower positions **1204**, **1206**. To release the latch mechanism to enable articulation of the handle **1222** between the upper and lower positions **1204**, **1206**, the frame **1202** includes a release **1210** (e.g., a push button).

FIG. **13** is a plan view of the example handle **1222** coupled to the upper frame support **206** of FIG. **12**. As shown in the illustrated example of FIG. **13**, the example stroller **1200** employs a latch release **1302** to collapse the stroller **1200** of the illustrated example. To activate the latch release **1302**, one or more triggers **1304***a*, **1304***b* of the release are moved relative to the upper frame support **206** (e.g., pulled, pushed, twisted, slid, etc.) to unlock a latch or lock provided by the pivot connector **210**. Additionally, the latch release **1302**, when activated, also releases a latch mechanism of the hub **1208** to enable the handle **1222** to rotate relative to the upper frame support **206**.

FIGS. **14** and **15** illustrate the example stroller **1200** of FIG. **12** being folded from an in-use unfolded position shown in FIG. **12** to a collapsed, folded, or storage position **1500** shown in FIG. **15**. More specifically, in the unlocked condition, the frame supports **204**, **206** and/or **208** pivot relative to each other. Referring to FIG. **14**, when the latch release **1302** is activated, the handle **1222** is pivoted about the hub **1208** toward the upper frame support **206** in a counterclockwise direction about the hub **1208** in the orientation of FIG. **14**. The handle **1222** and the upper frame support **206** are then pivoted toward the intermediate frame support **208**.

The lower and upper frame supports **204**, **206** rotate relative to the intermediate frame support **208** about the pivot **704**. As shown in FIG. **15**, in the fully collapsed, folded or storage position **1500**, the stroller **1200** of the illustrated example has a relatively low profile or dimensional envelope.

FIG. **16** illustrates another example stroller **1600** configured in accordance with the teachings disclosed herein. Those components of the example stroller **1600** that are substantially similar or identical to the components of the example stroller **100** described above and that have functions substantially similar or identical to the functions of those components will not be described in detail again below. Instead, the interested reader is referred to the above corresponding descriptions. To facilitate this process, similar reference numbers will be used for like structures.

FIG. **16** is a perspective view of the example stroller **1600**. In the illustrated example of FIG. **16**, the example stroller **1600** includes a frame **1602** that defines a seating area **104** to receive one or more infant seats **106**. The frame **1602** of the illustrated example employs seat mounts **108** to receive or couple the infant seats **106** to the frame **1602**. In some examples, the mounts **108** may be adjusted relative the frame **1602**. To enable a user to push, turn and/or tilt the stroller **1600** of the illustrated example, the frame **1602** includes a handle **1622**. The handle **1622** of the illustrated example is telescopically adjustable relative to the frame **1602** in a direction **1622***a*.

The frame **1602** of the illustrated example is supported by one or more front wheels **110** at a front end **112** of the frame **1602** and one or more rear wheels **114** at a rear end **116** of the frame **1602**. The frame **1602** of the illustrated example is assembled to form a structure which is intended to stay assembled in all phases of its use and storage. Additionally, for the purposes of improving maneuverability, control steering and/or to provide shock absorption, the frame **1602** of the illustrated example employs one or more intermediate wheels **118** disposed between the front and rear wheels **110**, **114**. To provide shock absorption to the example stroller **1600**, the intermediate wheels **118**, the front wheels **110** and/or the rear wheels **114** of the illustrated example may be implemented by air inflatable wheels composed of rubber.

In addition, the intermediate wheel **118** of the illustrated example has a diameter that is larger than diameters of the respective front and rear wheels **110**, **114**. In this example, the diameters of the respective front and rear wheels **110**, **114** are substantially the same. Thus, the front and rear wheels **110**, **114** engage a travel surface with a relatively smaller portion or contact area than the intermediate wheel **118**. As a result, rolling friction of the front and/or rear wheels **110**, **114** is reduced because the contact areas of the respective front and rear wheels **110**, **114** that engage a travel surface are relatively smaller compared to the contact area of the intermediate

wheels **118** which engages the travel surface. Further, the larger diameter of the intermediate wheels **118** permits the stroller **1600** of the illustrated example to roll over rough or uneven surfaces without difficulty. However, in other examples, the diameter of the intermediate wheels **118** is be substantially similar or identical to a diameter of the front wheels **110** and/or the rear wheels **114**.

FIG. **17** is a side view of the example stroller **1600** having soft goods **1702** to define one or more storage areas **1704**. In the illustrated example of FIG. **17**, the intermediate wheels **118** of the example stroller **1600** are positioned at approximately a midpoint between the front and rear wheels **110**, **114**. Each intermediate wheel **118** of the illustrated example defines a pivot point disposed between the front and rear wheels **110**, **114**. In other words, each of the intermediate wheels **118** provides a pivot point for the stroller **1400** that is offset or laterally spaced from the rear end **116** of the stroller **1400** and/or the rear wheels **114**. The pivot points provided by the intermediate wheels **118** enable the stroller **1400** to be turned leftward or rightward with relative ease when a sideways or substantially horizontal force is applied to the handle **1422**.

FIG. **18** is a top plan view of the example stroller **1400** of FIG. **14**. As shown in FIG. **18**, the offset pivot points provided by the intermediate wheels **118** enables both the front end **112** of the stroller **1400** and the rear end **116** of the stroller **1400** to pivot or rotate in an arcuate path relative to the turning pivot provided by one of the intermediate wheels **118**. For example, a user can apply a turning force **1802** to the handle **1622** to turn the stroller **1600** of the illustrated example about a pivot point provided by one of the intermediate wheels **118**. As a result, the stroller **1600** of the illustrated example can turn about a pivot point provided by either of the intermediate wheels **118** with a relatively tight turning radius and with relative ease. For example, the stroller **1600** can turn in the arcuate path a full 360 degrees substantially within its own length as reflected by the circle **1800** in FIG. **18**.

In the illustrated example, the frame **1602** defines a first side frame assembly **1802***a* and a second side frame assembly **1802***b* laterally spaced from the first side frame assembly **1802***a* to define the seating area **104**. The intermediate wheels **118** of the illustrated example are coupled to one another via an axle **120** extending between the side frame assemblies **1802***a*, **1802***b*. However, in other examples, a common axle **120** may not be used and the intermediate wheels **118** may then be free to drive or rotate independently relative to each other.

Additionally, to provide a pivot axis **132** when the front end **112** of the frame **1602** is raised, lifted, tilted or otherwise elevated relative to the rear end **116** of the frame **1602** (e.g., a downward force is applied to the handle **1622** perpendicular to the turning force **1802**), the example stroller **1600** of the illustrated example employs an axle **130**. In the illustrated example, the pivot axis **132** is positioned between the intermediate wheels **118** and the rear wheels **114**. In other words, the pivot axis **132** is offset relative to an axis of rotation **120***a* of the intermediate wheels **118** and the respective axes of rotation **250***a*, **250***b* of the rear wheels **114**.

For the purposes of improving stability and/or to facilitate collapsing the stroller **1400** with little or no interference, the intermediate wheels **118** of the illustrated example are offset a (e.g., horizontal) distance **1804** relative to the front wheels **110** and a distance **1806** relative to the rear wheels **114**. More specifically, when the stroller **1600** is moving in a straight line, the intermediate wheels **118** of the illustrated example travel along a line or path **1808** that extends outside of a line or path **1810** along which the front wheels **110** fall or travel and outside a line or path **1812** along which the rear wheels **114** fall or travel. While the intermediate wheels **118** of the illustrated example are spaced a further distance from a longitudinal center line **1814** of the stroller **1600** than the front and rear wheels **110**, **114**, in other examples, the intermediate wheels **118** may be aligned with the front and rear wheels **110**, **114**, may be offset inward of the front and/or rear wheels **110**, **114** (i.e., be closer to the longitudinal center line **1814**), and/or may be offset outbound of a first one of the front and rear wheels **110**, **114** and inbound of a second different one of the front and rear wheels **110**, **114**. In some examples, the front wheels **110** and the rear wheels **114** fall along the same line or travel path when the stroller **1400** is moving forward in a straight line.

To collapse the stroller **1600**, the frame **1602** of the illustrated example includes a latch release mechanism **1816**. To activate the latch release mechanism **1816**, the latch release mechanism **1816** of the illustrated example includes a handle **1818**. The handle **1818** is supported on a cross-bar or tube **1820** extending across the side frame assemblies **1802***a*, **1802***b*. The handle **1818** is located or positioned adjacent the seat mount **108** or the upper frame support **206** just under the infant seat **106** of the seating area **104**. Such location facilitates access when the infant seats **106** are removed from the seat mounts **108**.

FIG. **19** is a left side view of the side frame assembly **1802***a* of the example stroller **1600** of FIGS. **16-18**. FIG. **20** is a right side view of the side frame assembly **1802***b* of the example stroller **1600** of FIGS. **16-18**. Referring to FIGS. **19** and **20**, each of the side frame assemblies **1802***a*, **1802***b* includes a lower frame support **204**, an upper frame support **206** and an intermediate frame support **208** pivotally coupled about a pivot connector **210***a*, **210***b* or a hub **212***a*, **212***b*.

To couple the front wheels **110** to the frame **1602**, the side frame assemblies **1802***a*, **1802***b* employ a front wheel housing **230**. The front wheel housing **230** enables each of the front wheels **110** to rotate independently about a separate (e.g., horizontal) axis of rotation **236***a*, **236***b* and enables each of the front wheels **110** to swivel or pivot about a vertical axis **238***a*, **238***b*.

To mount or attach the rear wheels **114** and the intermediate wheels **118** to the respective side frame assemblies **1802***a*, **1802***b*, each of the side assemblies **1802***a*, **1802***b* of the illustrated example employs a housing, hub or carriage **1940** (e.g., a boogie). Each of the carriages **1640** of the illustrated example includes a hub, leg or port **1642***a* to receive a rear wheel housing **244** on which the rear wheel **114** is mounted and a hub, port or leg **1642***b* to receive an arm or portion **254** coupled to the intermediate wheel **118**.

Because the left and right carriages **1640** are substantially identical, the following description will focus on one carriage **1640** to serve as the description for both carriages **1640**.

The rear wheel housing **244** of the illustrated example enables each of the rear wheels **114** to rotate independently about a separate axis of rotation **250***a*, **250***b* and enables each of the rear wheels **114** to swivel or pivot about a substantially vertical axis **252***a*, **252***b* substantially perpendicular to the respective axis of rotation **250***a*, **250***b*. The carriage or housing **1940** pivotally couples a respective pair of the intermediate wheels **118** and the rear wheels **114** relative to the intermediate frame support **208** about the pivot axis **132** provided by the axle **130**.

To improve stability and/or facilitate balancing when maneuvering the stroller **1600** over a curb or other obstacle, the example stroller **1600** of the illustrated example employs a suspension apparatus **1928**. The suspension apparatus **1928** of the illustrated example provides stability and/or facilitates

balancing when the front end **110** of the stroller **1600** is pivoted or tilted relative to the rear end **112** of the frame **1602** about the pivot axle **130** (e.g., an upward direction relative to a support surface (e.g., the ground)). The suspension apparatus **1928** of the illustrated example helps prevent the intermediate wheels **118** and/or the rear wheels **114** from disengaging and/or lifting off of a travel surface (e.g., the ground) when the stroller **1600** is pushed along a path and/or tilted or pivoted about the pivot axis **132**. For example, to pivot or lift the front wheels **110** relative to the rear end **112** of the stroller **1600**, a downward force is applied to the handle **1622**. This downward force **1902** has a component that is substantially perpendicular to the turning force **1802** applied to the handle **1622** to turn or pivot the stroller **1600** about one of the intermediate wheels **118**. As a result, the suspension apparatus **1928** helps maintain the intermediate wheels **118** and the rear wheels **114** engaged with a travel path when the front end **110** of the stroller **1600** is lifted about the pivot axis **132**.

In the illustrated example, the suspension apparatus **1928** is positioned adjacent and parallel to the intermediate frame support **208**. In the illustrated example, the suspension apparatus **1928** includes a first end **1904** attached or coupled to the upper frame support **206** and a second end **1906** attached or coupled to the carriage **1940**. In the illustrated example, the first end **1904** is coupled (e.g., fixed or pivotally coupled) to the upper frame support **206** and second end **1906** is coupled (e.g., fixed or pivotally coupled) to the carriage **1940** via fasteners **1908** (e.g., pins, etc.). The upper frame support **206**, the carriage **1940**, the suspension apparatus **1928** and the intermediate frame support **208** define a four bar linkage **1910**. This linkage **1910** helps to assist rotating the carriage **1940** when folding the stroller **1600** as discussed in greater detail below. In the illustrated example, the linkage **1910** defines a parallelogram. However, in other examples, the linkage **1910** may have any other suitable shape and/or configuration.

FIG. **21** is a side view of the example stroller **1600** of FIGS. **14-20** with a partial cutaway view of the example suspension apparatus **1928**. The example suspension apparatus **1928** of the illustrated example is a compression spring **2102**. To enable the compression spring **2102** to compress when the front end **112** of the stroller **1600** is tiled or lifted about the pivot axis **132** or pivot **404** relative the rear end **116** of the stroller **1600**, the compression spring **2102** includes a first portion **2104** slidably coupled to a second portion **2106**. More specifically, the first portion **2104** is fixed or coupled (e.g., pivotally coupled) to the upper frame support **206** and the second portion **2106** is fixed or coupled (e.g. pivotally coupled) to the carriage **1940**. The first portion **2104** includes a pin or slider **2108** that slides or moves along a slot **2110** formed in the second portion **2106**. Thus, when the front end **112** of the stroller **1600** is lifted about the pivot axis **132** provided by the axle **130**, the first portion **2104** of the compression spring **2102** slides in the slot **2110** relative to the second portion **2106** to compress/decompress a spring positioned in a spring cylinder **2112**.

FIGS. **22**A-**22**D illustrate an example brake mechanism **2200** of the example stroller **1600**. The brake mechanism **2200** of the illustrated example is supported by the shared axle **120** of the intermediate wheels and a brake lever or foot pedal **2202** of the example brake mechanism **2200** is supported by the axle **130**. As shown in FIGS. **22**B and **22**C, respectively, the brake lever **2202** of the illustrated example is selectively movable or rotatable about the pivot axis **132** of the axle between a locked position **2204** to restrict or prevent rotation of the intermediate wheels **118** and an unlocked position **2206** to enable or facilitate rotation of the intermediate wheels **118**. The brake lever **2202** of the illustrated example includes a visual indicator **2208** (e.g., a color indicator) representative of the brake lever **2202** being in the locked position **2204** and the unlocked position **2206**.

Referring also to FIG. **22**D, the brake lever **2202** of the illustrated example is actuated or rotated relative to the axle **130** to activate a plunger **2210***a*, **2210***b* which is movable relative to a locking interface **2212***a*, **2212***b* (e.g., a plurality of protrusions on a hub) of the intermediate wheels **118**. To move the plunger **2210***a*, **2210***b* relative to the respective locking interface **2212***a*, **2212***b* of the intermediate wheel **118**, the brake mechanism **2200** of the illustrated example employs an actuator **2214**. The actuator **2214** of the illustrated example is a rack and pinion gear assembly having two racks **2216**, **2218** positioned between a gear **2220**. The rack **2216** of the illustrated example actuates the plunger **2210***b* and the rack **2218** of the illustrated example actuates the plunger **2210***b*. To actuate the racks **2216**, **2218**, the brake mechanism **2200** of the illustrated example employs a cable **2222**. More specifically, a first end of the cable **2222** is attached to the rack **2216** and a second end of the cable **2222** is attached to the brake lever **2202**. The cable **2222** of the illustrated example is routed to the brake lever **1922** via the arm **254** of the carriage **1640**. FIG. **22**D illustrates the brake mechanism **2200** in the locked condition. To unlock the intermediate wheels **118**, the brake lever **2202** of the illustrated example is rotated to the unlocked position **2206** (FIG. **22**). As a result, the cable **2222** moves (e.g., pulls) the rack **2216** toward the rack **2218** and causes the plunger **2210***b* to disengage the interface **2212***b*. Simultaneously, as the rack **2216** moves toward rack **2218**, the rack **2218** move toward the rack **2216** via the gear **2220**, thereby causing the plunger **2210***a* to disengage the interface **2212***a*. The actuator **2214** of the illustrated example employs biasing elements **2224** to bias or help move the racks **2216**, **2218**. The actuator **2214** of the illustrated example includes a housing **2226** that is coupled or supported by the axle **120**.

FIGS. **23** and **24** illustrate the example stroller **1400** of FIGS. **14-18** being folded from an in-use unfolded position shown in FIGS. **14-21** and **22**A-**22**D to a collapsed, folded, or storage position **2400** shown in FIG. **24**. As noted above, the side frame assemblies **1802***a*, **1802***b* are constructed such that the entire stroller **1600** of the illustrated example is selectively moveable between an extended, unfolded, in-use position (FIGS. **14-18** and **22**A-**22**D) and a collapsed, folded, or storage position **2400** (FIG. **24**).

FIGS. **25**A and **25**B illustrate the latch release mechanism **1816** of FIG. **18**. Referring to FIGS. **23-24** and **25**A-**25**B, to collapse the stroller **1600** of the illustrated example, a latch or lock of the pivot connector **210***a*, **210***b* is released via the latch release mechanism **1816**. In the unlocked position, the pivot connector **110***a*, **110***b* of the illustrated example enables the frame supports **204**, **206** and/or **208** to rotate or pivot relative to each other about a pivot **704** provided by the pivot connectors **210***a*, **210***b*, the latch release mechanism **1816** of the illustrated example is activated. To unlock the pivot connector **210***a*, **210***b*, the handle **1818** of the illustrated example is first lifted (e.g., upward) away from the frame **1602** after the infants seats **106** have been removed from the seat mounts **108**. After the handle **1818** is lifted, a trigger **2502** of the example latch release mechanism **1816** is actuated (e.g., depressed) by a user to enable the frame **1602** to collapse. When activated, the latch release mechanism **1816** of the illustrated example moves a plunger via any suitable means (e.g., switch, lock release, pull cord, etc.) out of engagement with a locking interface of the pivot connector **210***a*, **210***b* to enable the frame supports **204**, **206** and **208** to pivot relative to each other about the pivot **704**. The trigger **2502** of the illus-

trated example is coupled to the plunger via a cable or strap positioned in a housing or tube **1820** of the latch release mechanism **1816**. The example latch mechanism **1818** enables one-hand operation to collapse the stroller **1600**.

In the illustrated example of FIG. **23**, the lower and upper frame supports **204**, **206** of the illustrated example pivot toward the intermediate frame support **208** in the direction shown by the respective arrows **2304** and **2306**. Additionally, the carriage **1940** of the illustrated example also rotates toward the intermediate frame support **208** in a direction represented by arrow **2308** when folding the stroller **1600** to the folded position **2400**.

In particular, as the upper frame support **206** pivots toward the intermediate frame support **208**, the suspension apparatus **1928** acts as a lever by moving toward the rear wheels **114** in the direction arrow **2310** to cause the carriage **1940** to pivot in the direction of arrow **2312** about the pivot axis **132**. As a result, the suspension apparatus **1928** causes the intermediate wheels **118** to pivot toward the intermediate frame support **208** simultaneously (via the carriage **1940**) as the upper frame support **206** pivots toward the intermediate frame support **208**.

As shown in FIG. **24**, in the fully collapsed, folded or storage position **2400**, the stroller **1600** of the illustrated example has a relatively low profile or dimensional envelope. As shown in FIG. **24**, the suspension apparatus **1928** does not interfere with collapsing the stroller **1600** to the folded position **2400**. While a collapsible frame **1602** is shown, some example strollers may not collapse.

In some examples, the suspension apparatus **1928** is implemented by a torsion spring coupled to the axle **130**. Further, the compression spring **2102** of the illustrated example may be replaced by an auxiliary frame member or rod to assist in collapsing the example stroller **1600**.

FIGS. **26-28** illustrate another example stroller **2600** constructed in accordance with the teachings disclosed herein. Those components of the example stroller **2600** that are substantially similar or identical to the components of the example stroller **100** or **1600** described above and that have functions substantially similar or identical to the functions of those components will not be described in detail again below. Instead, the interested reader is referred to the above corresponding descriptions. To facilitate this process, similar reference numbers will be used for like structures.

The example stroller **2600** of the illustrated example employs a frame **2602** supported by one or more front wheels **110**, one or more rear wheels **114** and one or more intermediate wheels **118**. A front wheel housing **230** couples the front wheels **110** to the frame **2602**. A carriage or carrier **240** pivotally couples the intermediate wheels **118** and the rear wheels **114** relative to the frame **2602**. For example, the carriage **240** defines a pivot **404** about which the intermediate wheels **118** and the rear wheels **114** can pivot relative to the frame **2602**.

The frame **2602** of the illustrated example defines side assemblies laterally spaced apart to define a seating area **104**. Each of the side assemblies includes a lower frame support **204**, an upper frame support **206** and an intermediate frame support **208**. The intermediate frame support **208** is coupled to the upper frame support **206** via a connector **2604** (e.g., a hub). Unlike the frames **102** and **1602** described above, the upper frame support **206** is coupled to the lower frame support **204** via a pivot connector **2606**. More specifically, the connector **2606** is positioned along a length of the upper frame support **206** such that the connector **2604** is spaced apart from the pivot connector **2606** by a distance **2608** defined by a portion upper frame support **206**. The pivot connector **2606** of the illustrated example provides a pivot point **2610** to enable the lower frame support **204** to pivot relative to the upper frame support **206** and the connector **2604** of the illustrated example provides a pivot point **2612** to enable the upper frame support **206** to pivot relative to the intermediate frame support **208** when the stroller **2600** is folded. Thus, the intermediate frame support **208** is positioned adjacent or spaced away from the pivot point **2610** provided by the pivot connector **2606**. The example stroller **2600** shown in FIG. **26** does not employ a suspension apparatus. However, in other examples, the example stroller **2600** includes a suspension apparatus (e.g., the suspension apparatus **128** or **1928** disclosed herein).

For the purpose of facilitating collapsing or folding the stroller **2600**, the frame **2602** of the illustrated example employs an auxiliary frame member or rod **2614**. The auxiliary frame member **2614** of the illustrated example has a first end coupled or attached the connector **2606** and a second end attached or coupled to an arm **254** of the carriage **240**. The auxiliary frame member **2614** of the illustrated example is substantially parallel to the intermediate frame support **208**. The auxiliary frame member **2614** of the illustrated example is pivotally coupled to the lower frame support **204** and to the upper frame support **206** via the pivot connector **2606**.

FIGS. **27** and **28** illustrate the example stroller **2600** of FIG. **26** being folded from an in-use unfolded position shown in FIG. **26** to a collapsed, folded, or storage position **2800** shown in FIG. **28**. The frame **2602** is constructed such that the entire stroller **2600** of the illustrated example is selectively moveable between an extended, unfolded, in-use position (FIG. **26**) and a collapsed, folded, or storage position **2800** (FIG. **28**). To collapse the stroller **2600** of the illustrated example, a latch release is activated via any suitable means (e.g., switch, lock release, pull cord, etc.) to unlock a latch mechanism and enable the frame supports **204**, **206** and/or **208** and the auxiliary frame member **2614** to rotate or pivot relative to each other about the pivot **2610** provided by the pivot connector **2606** and the pivot **2612** provided by the connector **2604**. In the illustrated example, the lower frame support **204** pivots toward the intermediate frame support **208** in a direction of arrow **2702** and the upper frame support **206** pivots toward the intermediate frame support **208** in a direction of arrow **2704**.

More specifically, the upper frame support **206** pivots about the connector **2604** such that the portion **2608** of the upper frame support **206** extending between the connectors **2604** and **2606** acts as a lever. As the upper frame support **206** pivots toward the intermediate frame support **208** about the pivot **2612**, the upper frame support **206** causes the auxiliary frame member **2614** to move in a direction of arrow **2708** (e.g., an upward direction). In turn, the auxiliary frame **2614** causes or pulls cause the arm **254** of the carriage **240** to pivot toward the intermediate frame support **208** in the direction shown by the arrow **2710**. As a result, the carriage **240** of the illustrated example rotates about the pivot **140***a*, **404** toward the intermediate frame support **208** in the direction represented by arrow **2710** when folding the stroller **2600** to the folded position **2800**. A handle **2722** of the frame **2602** may be rotated toward the upper frame support **206** about a pivot **2712** in the direction of arrow **2714**.

As shown in FIG. **28**, in the fully collapsed, folded or storage position **2800**, the stroller **2600** of the illustrated example has a relatively low profile or dimensional envelope. While a collapsible frame **2602** is shown, some example strollers may not collapse.

FIG. **29** is a flowchart of an example method **2900** that may be used to manufacture an example stroller such as the example stroller **100** of FIGS. **1-8**, **9**A, **9**B and **10**, the

example stroller **1100** of FIG. **11**, the example stroller **1200** of FIGS. **12-15**, the example stroller **1600** of FIGS. **16-21**, **22**A-**22**D, **23**, **24**, **25**A and **25**B, and the example stroller **2600** of FIGS. **26-28**. While an example manner of manufacturing the example covering assemblies, one or more of the blocks and/or processes illustrated in FIG. **29** may be combined, divided, re-arranged, omitted, eliminated and/or implemented in any other way. Further still, the example method of FIG. **29** may include one or more processes and/or blocks in addition to, or instead of, those illustrated in FIG. **29**, and/or may include more than one of any or all of the illustrated processes and/or blocks. Further, although the example method **2900** is described with reference to the flow chart illustrated in FIG. **29**, many other methods of manufacturing a stroller may alternatively be used.

To begin the example assembly process of FIG. **29**, a front wheel is mounted to a front portion of a frame (block **2902**). For example, the front wheels **110** of the illustrated examples disclosed herein are mounted to the lower frame support **204** via the front wheel housing **230**.

A rear wheel and an intermediate wheel are also mounted to the frame (block **2904**). More specifically, the intermediate wheel is positioned between the rear wheel and a rear wheel **114** are mounted to a first side frame assembly **202***a*, **1202***a*, **1802***a*, **2602***a*, via a first carriage **240**, **1940** and a second set of an intermediate wheel **118** and a rear wheel **114** is mounted to a second side frame assembly **202***b*, **1202***b*, **1802***b*, **2602***b* via a second carriage **240**, **1940**.

A pivot axis is provided between the rear wheels and the intermediate wheels to enable the rear wheels and the intermediate wheels to pivot about the pivot axis (block **2808**). For example, a pivot axis **132** is provided by an axle **130** extending between the first and second side frame assemblies **202***a*, **202***b*; **1202***a*, **1202***b*; **1802***a*, **1802***b*; **2602***a*, **2602***b*. In particular, a carriage **240**, **1640** is mounted to each end of the axle **130** to pivotally mount the carriages **240**, **1640** to the frame of the stroller. More specifically, the intermediate wheel **118** is mounted to the carriage **240**, **1640** via an arm **254** and the rear wheel is mounted to the carriage **240**, **1640** via a rear wheel housing **244**. In some examples, the intermediate wheels **118** of the first and second side frame assemblies **202***a*, **202***b*; **1202***a*, **1202***b*; **1802***a*, **1802***b*; **2602***a*, **2602***b* are rotatably coupled together via an axle **120**.

In some examples, an example stroller may be constructed with a suspension that provides an increased force when the stroller is rotated about the pivot axis **132** to lift a front end **112** of the stroller relative to a rear end **116**. For example, an example stroller disclosed herein may be constructed with a suspension apparatus **128**, **1928**. For example, the suspension apparatus **128** is coupled or attached to the axle **130** or pivot axis **132** and the intermediate frame support **208**. Alternatively, the suspension **1928** is attached to upper frame support **206** and the carriage **240**, **1940** adjacent the intermediate frame support **208**.

Although certain example methods, apparatus and articles of manufacture have been described herein, the scope of coverage of this patent is not limited thereto. On the contrary, this patent covers all methods, apparatus and articles of manufacture fairly falling within the scope of the claims of this patent.

What is claimed is:

1. A stroller comprising:

a frame;

a front wheel and a rear wheel to support the frame;

an intermediate wheel positioned between the front wheel and the rear wheel; and

a housing coupled to the rear wheel and the intermediate wheel, the housing pivotally mounted to the frame to enable the frame to pivot about a pivot axis when the front wheel of the stroller is elevated relative to the intermediate wheel and the rear wheel, the pivot axis being offset relative to an axis of rotation of the intermediate wheel and an axis of rotation of the rear wheel.

2. A stroller as defined in claim **1**, further comprising an axle extending between a first side frame assembly and a second side frame assembly of the frame, the axle defining the pivot axis.

3. A stroller as defined in claim **2**, wherein the axle is coupled to the housing and positioned between the axis of rotation of the intermediate wheel and the axis of rotation of the rear wheel.

4. A stroller as defined in claim **1**, wherein the intermediate wheel and the rear wheel remain engaged with a travel surface when the front wheel is elevated relative to the travel surface.

5. A stroller as defined in claim **1**, further comprising a suspension to provide a reactive force when a front end of the stroller is pivoted upward with the rear wheel and the intermediate wheel on a ground surface.

6. A stroller as defined in claim **5**, wherein the suspension comprises a torsion spring coupled to an axle of the stroller.

7. A stroller as defined in claim **1**, further comprising a limit to limit a rotational distance that the frame is able to pivot about the pivot axis.

8. A stroller as defined in claim **1**, wherein the intermediate wheel is to provide a turning pivot point about which to turn the stroller when a turning force is applied to a handle of the stroller.

9. A stroller as defined in claim **1**, wherein a distance between a center of the intermediate wheel and a center of the rear wheel is less than a distance between the center of the intermediate wheel and a center of the front wheel.

10. A stroller as defined in claim **1**, wherein the housing comprises a hub to couple the intermediate wheel and the rear wheel to the frame.

11. A stroller as defined in claim **10**, wherein the hub includes a first leg to receive the rear wheel and a second leg to receive the intermediate wheel.

12. A stroller comprising:

a frame having a first side frame assembly laterally spaced from a second side frame assembly to define a seating area therebetween;

a front wheel to support a front end of the frame;

a rear wheel to support a rear end of the frame;

an intermediate wheel to provide a turning pivot positioned between the front wheel and the rear wheel; and

an axle extending between the first side frame assembly and the second side frame assembly, the axle defining a pivot axis about which the frame is to pivot when the front wheel is raised relative to the rear wheel and the intermediate wheel, the axle positioned between an axis of rotation of the intermediate wheel and an axis of rotation of the rear wheel.

13. A stroller as defined in claim **12**, further comprising a suspension coupled to the axle to provide an increased force to the frame when the frame is pivoted about the axle.

14. A stroller as defined in claim **13**, wherein the suspension comprises a torsion spring coaxially coupled to at least one of the axle or the frame.

15. A stroller as defined in claim **12**, further comprising a housing to mount the intermediate wheel and the rear wheel to the frame.

16. A stroller as defined in claim **15**, wherein each of the side frame assemblies includes a lower frame support, an

upper frame support and an intermediate frame support pivotally coupled via a pivot connector at respective first ends of the lower, upper and intermediate frame supports.

17. A stroller as defined in claim **16**, wherein the lower frame support is substantially aligned or parallel to the upper frame support and the intermediate frame support is substantially perpendicular relative to the lower and upper frame supports when the frame is in an in-use position.

18. A stroller as defined in claim **16**, further comprising a suspension positioned adjacent the intermediate frame support, the suspension having a first end coupled to the upper frame support and a second end coupled to the housing.

19. A stroller as defined in claim **18**, wherein the suspension is substantially parallel to the intermediate frame support.

20. A stroller as defined in claim **18**, wherein the suspension, the intermediate frame support, the upper frame support and the housing define a linkage to cause the housing to rotate about the axle when folding the stroller to a collapsed position.

* * * * *