SPECIFICATION

TITLE: A COMBINATION PUSHCHAIR FRAME

Be it known that I, Gordon Liao, have invented a new, original and ornamental design for a combination pushchair frame of which the following is a specification, reference being had to the accompanying drawings, forming a part hereof.

Figure 1 is a perspective view of a combination pushchair frame showing my design;

Figure 2 is a front elevational view thereof;

Figure 3 is a rear elevational view thereof;

Figure 4 is a left side elevational view thereof;

Figure 5 is a right side elevational view thereof;

Figure 6 is a top plan view thereof;

Figure 7 is a bottom plan view thereof;

Figure 8 is a perspective schematic view of a combination pushchair frame showing my design while the pushchair frame attaches a car seat, a pram body and a basket for illustrative purposes and forms no part of the claimed design;

Figure 9 is a perspective schematic view of a combination pushchair frame showing my design while the pushchair frame attaches a seat unit, a car seat and a basket for illustrative purposes and forms no part of the claimed design;

Figure 10 is a perspective schematic view of a combination pushchair frame showing my design while the pushchair frame attaches a seat unit, a pram body and a basket for illustrative purposes and forms no part of the claimed design;

Figure 11 is a perspective schematic view of a combination pushchair frame showing my design while the pushchair frame attaches two seat units facing forward, a basket and a wheeled footboard for illustrative purposes and forms no part of the claimed design;

Figure 12 is a perspective schematic view of a combination pushchair frame showing my design while the pushchair frame attaches two seat units face to face, a basket and a wheeled footboard for illustrative purposes and forms no part of the claimed design; and

Figure 13 is a perspective schematic view of a combination pushchair frame showing my design while the pushchair frame attaches two seat units face to face, a car seat, a basket and a wheeled footboard for illustrative purposes and forms no part of the claimed design.

I CLAIM:
The ornamental design for a combination pushchair frame as shown and described.

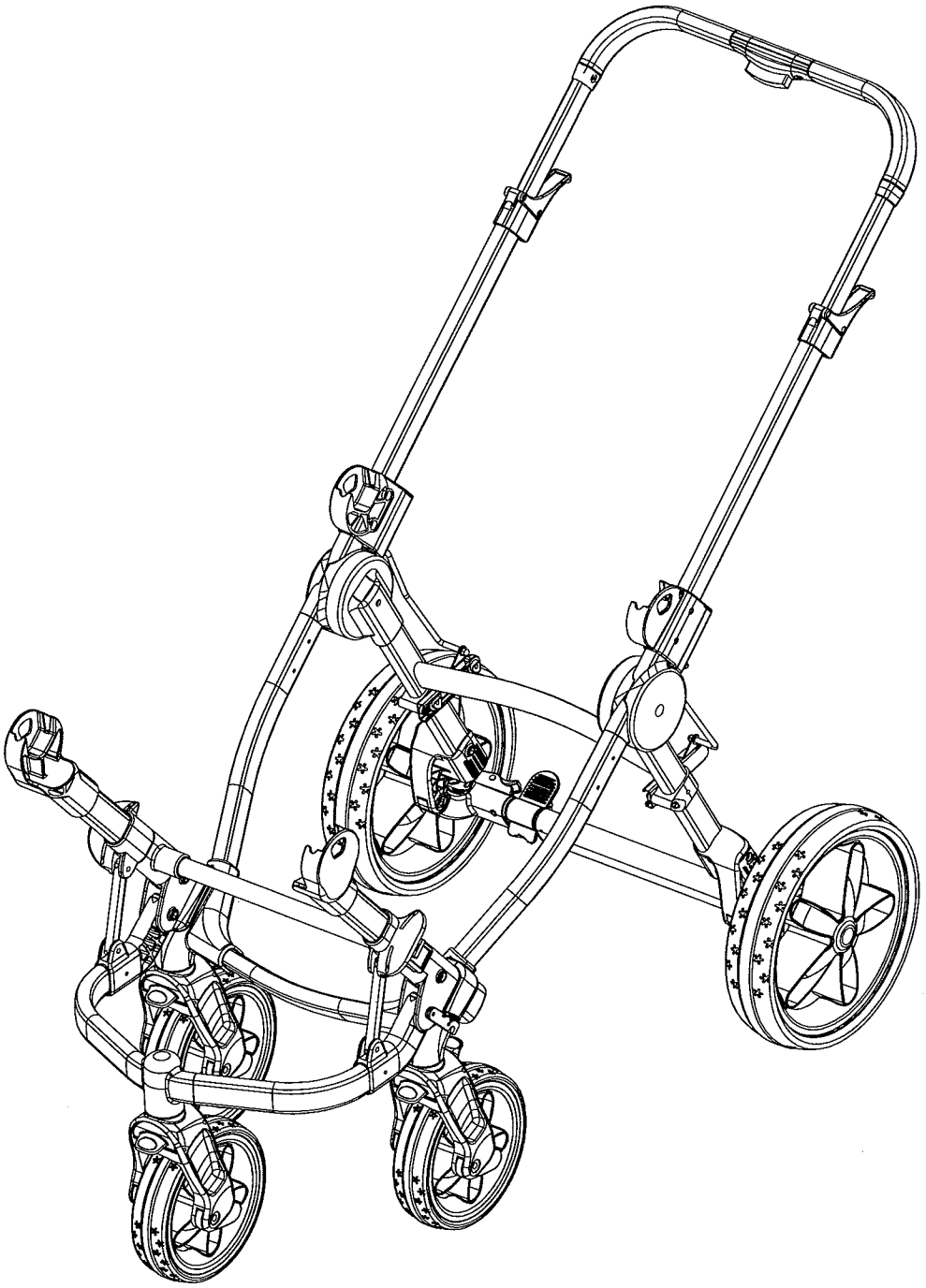

FIG. 1

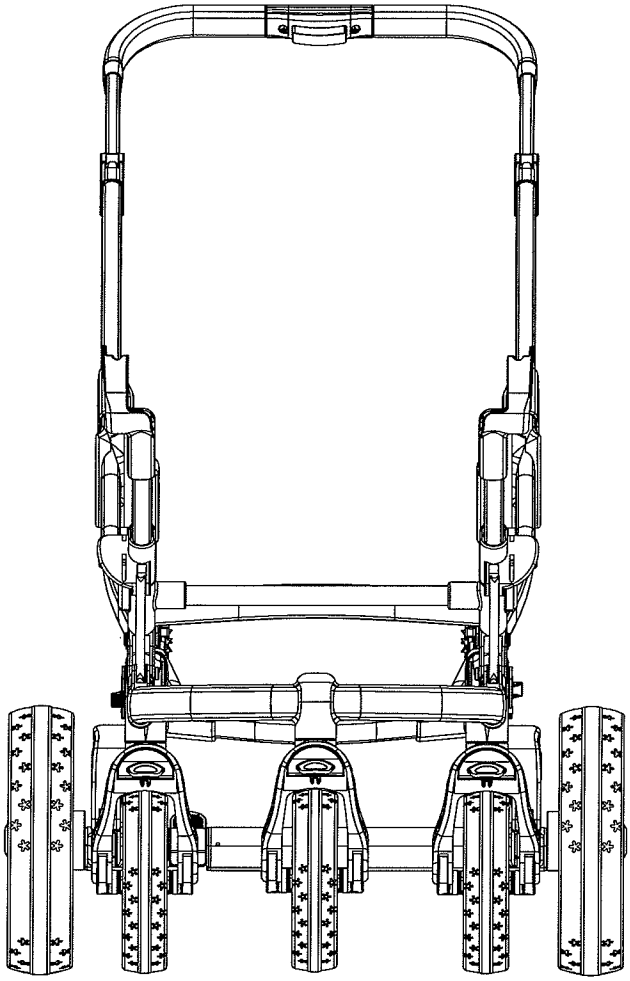

FIG. 2

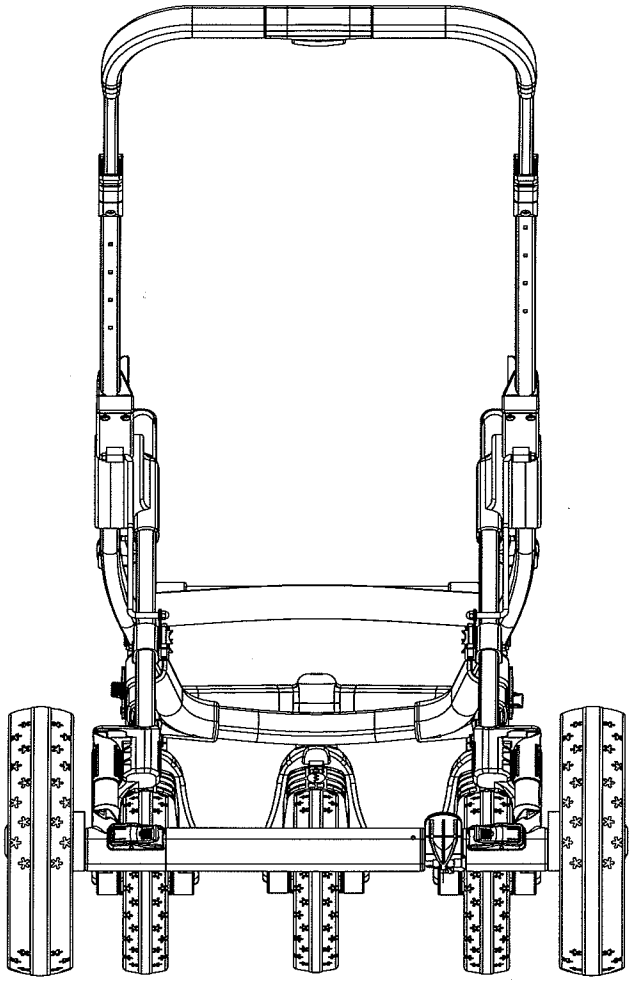

FIG. 3

FIG. 4

FIG. 5

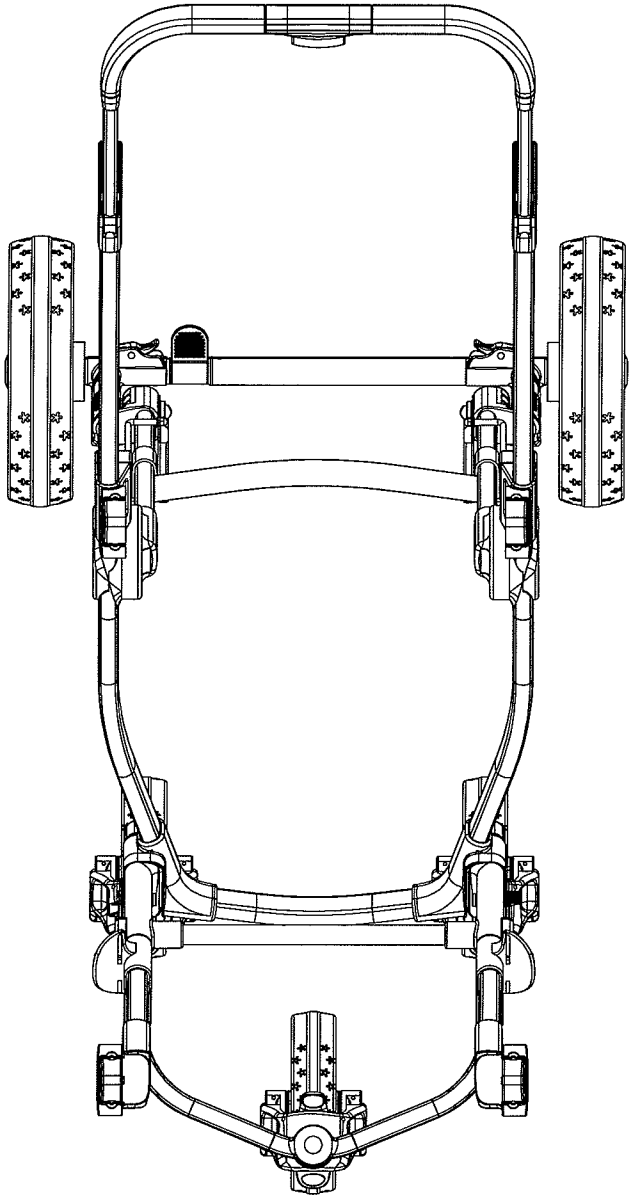

FIG. 6

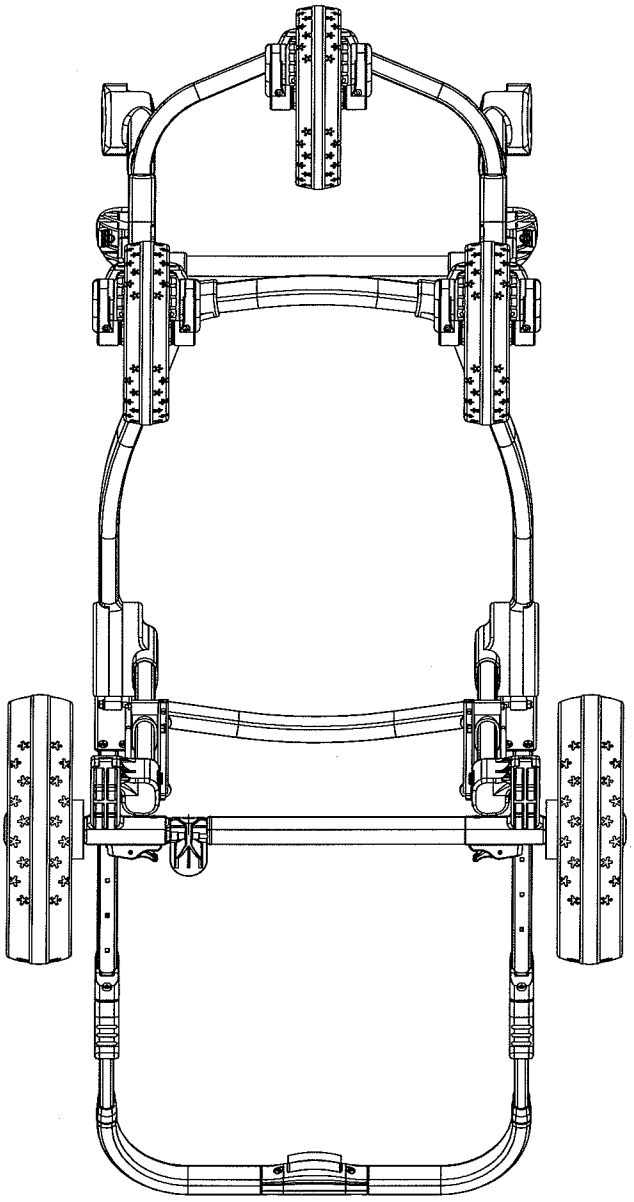

FIG. 7

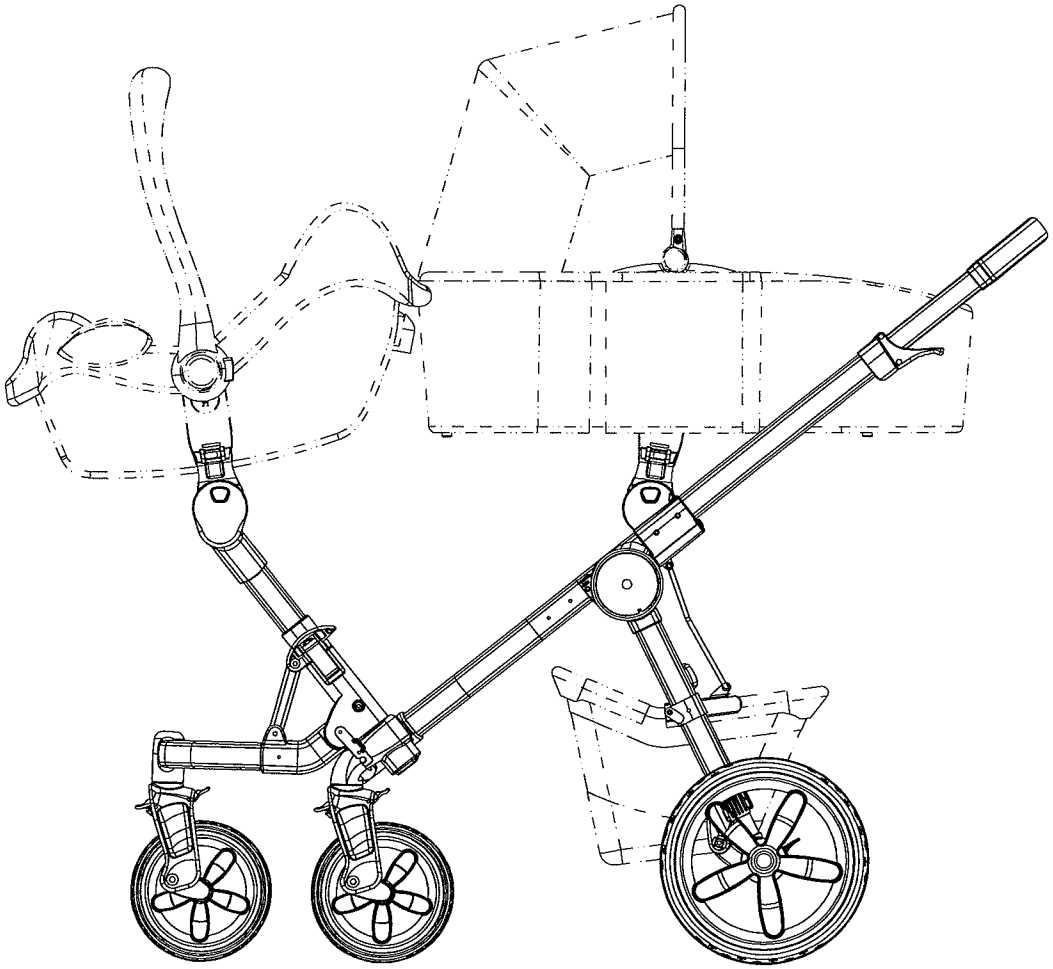

FIG. 8

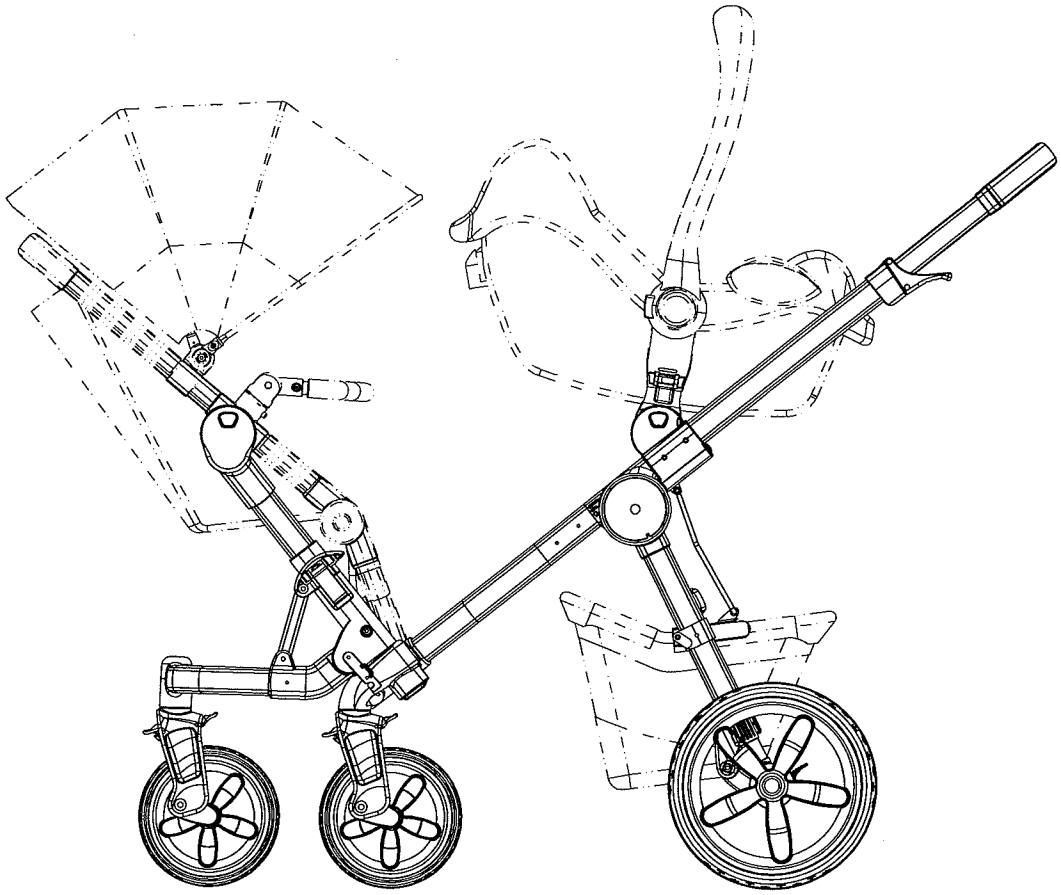

FIG. 9

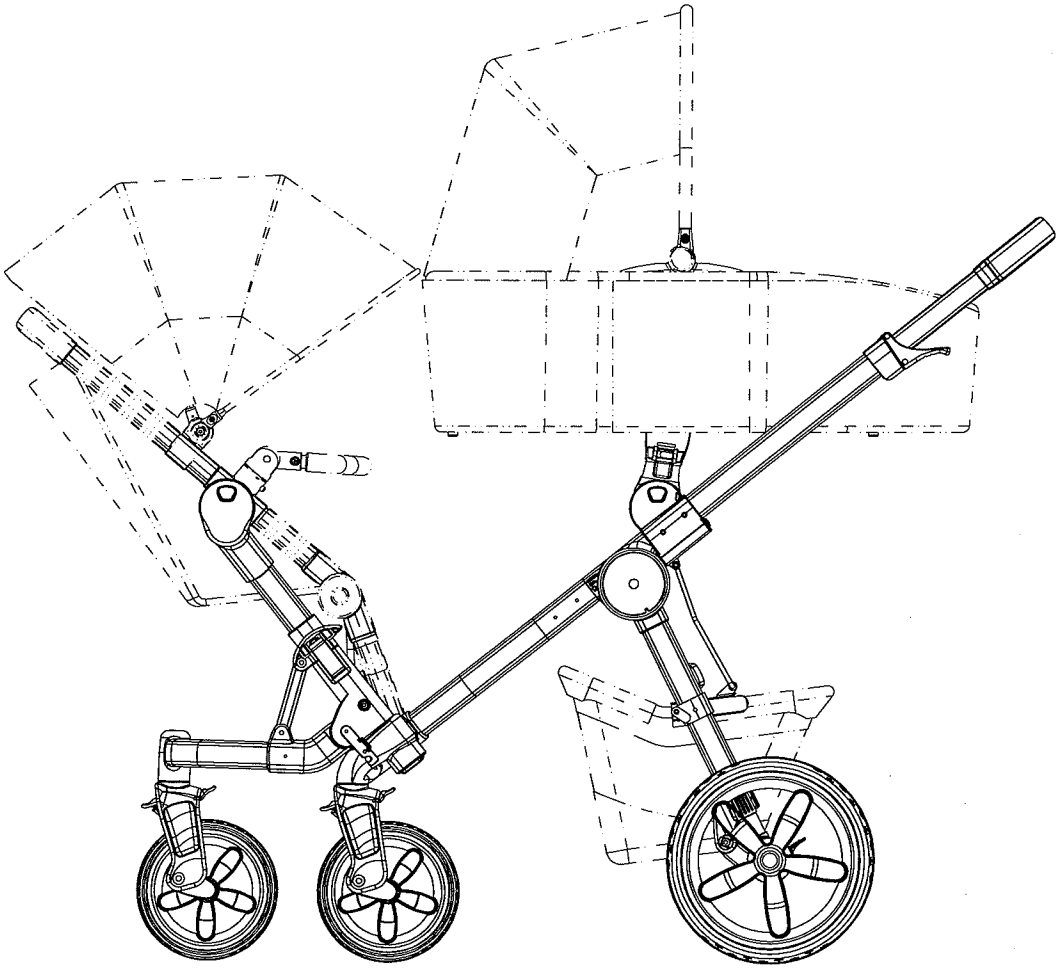

FIG. 10

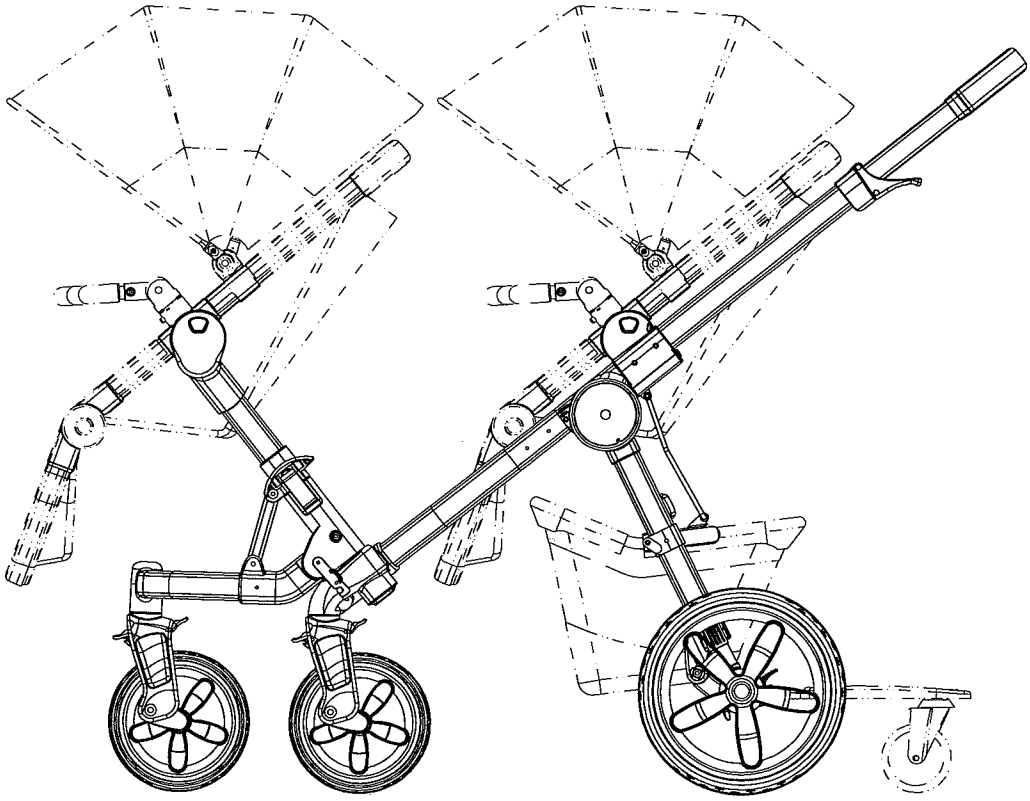

FIG. 11

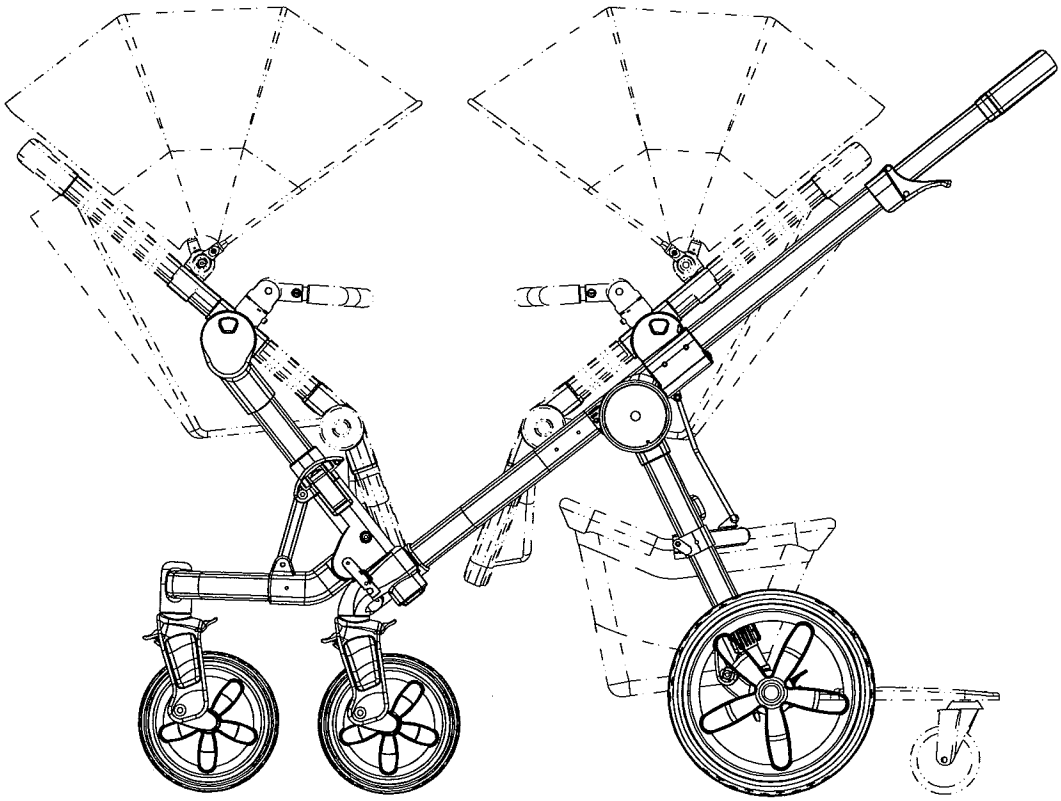

FIG. 12

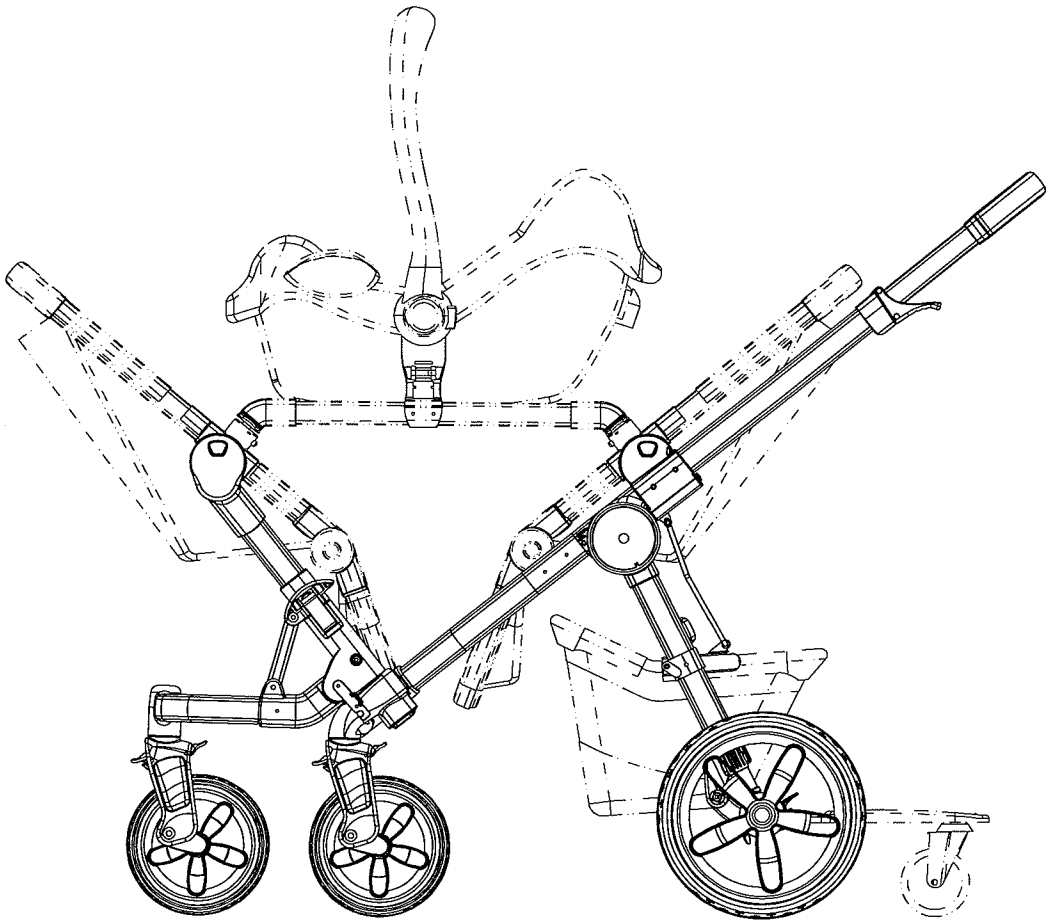

FIG. 13

DECLARATION FOR PATENT APPLICATION/POWER OF ATTORNEY

As a below named inventor, I hereby declare that:

My residence, mailing address, and citizenship are as stated below next to my name. I believe I am the original, first and sole inventor (if only one name is listed below) or an original, first and joint inventor (if plural names are listed below) of the subject matter which is claimed and for which a patent is sought on the invention entitled:

A Combination Pushchair Frame

the specification of which is attached hereto.

I hereby state that I have reviewed and understand the contents of the above-identified specification, including the claims.

I acknowledge the duty to disclose information which is material to patentability as defined in 37 CFR 1.56.

I hereby claim foreign priority benefit(s) under Title 35, United States Code § 119 of any foreign application(s) for patent or inventor's certificate listed below and have also identified below any foreign application(s) for patent or inventor's certificate having a filing date before that of the application on which priority is claimed.

PRIOR FOREIGN APPLICATION(S)			*Priority Claimed*	
Application Number	*Country*	*Day/Month/Year Filed*	*Yes*	*No*

POWER OF ATTORNEY: As a named inventor, I (we) hereby appoint:

KAMRATH & ASSOCIATES, P.A., Customer No. 69638
Alan D. Kamrath (Reg. No. 28,227)
Edward Weck (Reg. No. 53,752)
4825 Olson Memorial Hwy., Suite 245
Golden Valley, Minnesota 55422
(763) 746-1599

as my/our attorney(s) or agent(s), with full process of substitution and revocation, to prosecute the application identified above, and to transact all business in the United States Patent and Trademark Office connected therewith.

I hereby declare that all statements made herein of my own knowledge are true and that all statements made on information and belief are believed to be true; and further that these statements were made with the knowledge that willful false statements and the like so made are punishable by fine or imprisonment, or both, under 18 U.S.C. 1001 and that such willful false statements may jeopardize the validity of the application or any patent issued thereon.

Full Name of Sole or First Inventor: Gordon LIAO		
Residence: No. 5, Ming Dong Road, Yung Kang City, Tainan Hsien, TAIWAN		
Mailing Address: (same as residence)		
Country: TAIWAN	Citizenship: Taiwan, R.O.C.	
Inventor's Signature:		Date: September 1, 2008
Full Name of Joint Inventor (if any):		
Residence:		
Mailing Address:		
Country:	Citizenship:	
Inventor's Signature:		Date:
☐ Additional inventors are being named on the following duplicate page(s) of this sheet		

Electronic Patent Application Fee Transmittal

Application Number:	
Filing Date:	
Title of Invention:	A Combination Pushchair Frame
First Named Inventor/Applicant Name:	Gordon Liao
Filer:	Alan Kamrath
Attorney Docket Number:	DEW-2933USK

Filed as Small Entity

Design Filing Fees

Description	Fee Code	Quantity	Amount	Sub-Total in USD($)
Basic Filing:				
Design application filing	2012	1	105	105
Design Search Fee	2112	1	50	50
Design Examination Fee	2312	1	65	65
Pages:				
Claims:				
Miscellaneous-Filing:				
Petition:				
Patent-Appeals-and-Interference:				

Description	Fee Code	Quantity	Amount	Sub-Total in USD($)
Post-Allowance-and-Post-Issuance:				
Extension-of-Time:				
Miscellaneous:				
			Total in USD ($)	**220**

Electronic Acknowledgement Receipt

EFS ID:	3892765
Application Number:	29324044
International Application Number:	
Confirmation Number:	5818
Title of Invention:	A Combination Pushchair Frame
First Named Inventor/Applicant Name:	Gordon Liao
Customer Number:	69638
Filer:	Alan Kamrath
Filer Authorized By:	
Attorney Docket Number:	DEW-2933USK
Receipt Date:	05-SEP-2008
Filing Date:	
Time Stamp:	10:56:50
Application Type:	Design

Payment information:

Submitted with Payment	yes
Payment Type	Credit Card
Payment was successfully received in RAM	$220
RAM confirmation Number	7666
Deposit Account	
Authorized User	

File Listing:

Document Number	Document Description	File Name	File Size(Bytes)/ Message Digest	Multi Part /.zip	Pages (if appl.)

1		20080905094726.pdf	664799 8c02361d1d53b3f52e370e667c407e4ade464f2b	yes	16
	Multipart Description/PDF files in .zip description				
	Document Description		**Start**	**End**	
	Specification		1	2	
	Drawings-only black and white line drawings		3	15	
	Oath or Declaration filed		16	16	
Warnings:					
Information:					
2	Fee Worksheet (PTO-06)	fee-info.pdf	32226 46b8330f88d1204ce5324c759b7b963e66a4ce9d	no	2
Warnings:					
Information:					
		Total Files Size (in bytes):	697025		

This Acknowledgement Receipt evidences receipt on the noted date by the USPTO of the indicated documents, characterized by the applicant, and including page counts, where applicable. It serves as evidence of receipt similar to a Post Card, as described in MPEP 503.

<u>New Applications Under 35 U.S.C. 111</u>
If a new application is being filed and the application includes the necessary components for a filing date (see 37 CFR 1.53(b)-(d) and MPEP 506), a Filing Receipt (37 CFR 1.54) will be issued in due course and the date shown on this Acknowledgement Receipt will establish the filing date of the application.

<u>National Stage of an International Application under 35 U.S.C. 371</u>
If a timely submission to enter the national stage of an international application is compliant with the conditions of 35 U.S.C. 371 and other applicable requirements a Form PCT/DO/EO/903 indicating acceptance of the application as a national stage submission under 35 U.S.C. 371 will be issued in addition to the Filing Receipt, in due course.

<u>New International Application Filed with the USPTO as a Receiving Office</u>
If a new international application is being filed and the international application includes the necessary components for an international filing date (see PCT Article 11 and MPEP 1810), a Notification of the International Application Number and of the International Filing Date (Form PCT/RO/105) will be issued in due course, subject to prescriptions concerning national security, and the date shown on this Acknowledgement Receipt will establish the international filing date of the application.

SCORE Placeholder Sheet for IFW Content

Application Number: 29324044 Document Date: 09/05/2008

The presence of this form in the IFW record indicates that the following document type was received in electronic format on the date identified above. This content is stored in the SCORE database.

- Design Drawing

Since this was an electronic submission, there is no physical artifact folder, no artifact folder is recorded in PALM, and no paper documents or physical media exist. The TIFF images in the IFW record were created from the original documents that are stored in SCORE.

To access the documents in the SCORE database, refer to instructions developed by SIRA.

At the time of document entry (noted above):

- Examiners may access SCORE content via the eDAN interface.
- Other USPTO employees can bookmark the current SCORE URL (http://es/ScoreAccessWeb/).
- External customers may access SCORE content via the Public and Private PAIR interfaces.

Form Revision Date: February 8, 2006

UNITED STATES PATENT AND TRADEMARK OFFICE

UNITED STATES DEPARTMENT OF COMMERCE
United States Patent and Trademark Office
Address: COMMISSIONER FOR PATENTS
P.O. Box 1450
Alexandria, Virginia 22313-1450
www.uspto.gov

APPLICATION NUMBER	FILING or 371(c) DATE	GRP ART UNIT	FIL FEE REC'D	ATTY.DOCKET.NO	TOT CLAIMS	IND CLAIMS
29/324,044	09/05/2008	2913	220	DEW-2933USK	1	1

CONFIRMATION NO. 5818

69638
KAMRATH & ASSOCIATES P.A.
4825 OLSON MEMORIAL HIGHWAY
SUITE 245
GOLDEN VALLEY, MN 55422

FILING RECEIPT

OC000000032100686

Date Mailed: 09/17/2008

Receipt is acknowledged of this non-provisional patent application. The application will be taken up for examination in due course. Applicant will be notified as to the results of the examination. Any correspondence concerning the application must include the following identification information: the U.S. APPLICATION NUMBER, FILING DATE, NAME OF APPLICANT, and TITLE OF INVENTION. Fees transmitted by check or draft are subject to collection. Please verify the accuracy of the data presented on this receipt. **If an error is noted on this Filing Receipt, please submit a written request for a Filing Receipt Correction. Please provide a copy of this Filing Receipt with the changes noted thereon. If you received a "Notice to File Missing Parts" for this application, please submit any corrections to this Filing Receipt with your reply to the Notice. When the USPTO processes the reply to the Notice, the USPTO will generate another Filing Receipt incorporating the requested corrections**

Applicant(s)

Gordon Liao, Yung Kang City, TAIWAN;

Power of Attorney: The patent practitioners associated with Customer Number 69638

Domestic Priority data as claimed by applicant

Foreign Applications

If Required, Foreign Filing License Granted: 09/16/2008

The country code and number of your priority application, to be used for filing abroad under the Paris Convention, is **US 29/324,044**

Projected Publication Date: None, application is not eligible for pre-grant publication

Non-Publication Request: No

Early Publication Request: No
** **SMALL ENTITY** **

Title

Combination Pushchair Frame

Preliminary Class

D12

PROTECTING YOUR INVENTION OUTSIDE THE UNITED STATES

Since the rights granted by a U.S. patent extend only throughout the territory of the United States and have no effect in a foreign country, an inventor who wishes patent protection in another country must apply for a patent in a specific country or in regional patent offices. Applicants may wish to consider the filing of an international application under the Patent Cooperation Treaty (PCT). An international (PCT) application generally has the same effect as a regular national patent application in each PCT-member country. The PCT process **simplifies** the filing of patent applications on the same invention in member countries, but **does not result** in a grant of "an international patent" and does not eliminate the need of applicants to file additional documents and fees in countries where patent protection is desired.

Almost every country has its own patent law, and a person desiring a patent in a particular country must make an application for patent in that country in accordance with its particular laws. Since the laws of many countries differ in various respects from the patent law of the United States, applicants are advised to seek guidance from specific foreign countries to ensure that patent rights are not lost prematurely.

Applicants also are advised that in the case of inventions made in the United States, the Director of the USPTO must issue a license before applicants can apply for a patent in a foreign country. The filing of a U.S. patent application serves as a request for a foreign filing license. The application's filing receipt contains further information and guidance as to the status of applicant's license for foreign filing.

Applicants may wish to consult the USPTO booklet, "General Information Concerning Patents" (specifically, the section entitled "Treaties and Foreign Patents") for more information on timeframes and deadlines for filing foreign patent applications. The guide is available either by contacting the USPTO Contact Center at 800-786-9199, or it can be viewed on the USPTO website at http://www.uspto.gov/web/offices/pac/doc/general/index.html.

For information on preventing theft of your intellectual property (patents, trademarks and copyrights), you may wish to consult the U.S. Government website, http://www.stopfakes.gov. Part of a Department of Commerce initiative, this website includes self-help "toolkits" giving innovators guidance on how to protect intellectual property in specific countries such as China, Korea and Mexico. For questions regarding patent enforcement issues, applicants may call the U.S. Government hotline at 1-866-999-HALT (1-866-999-4158).

LICENSE FOR FOREIGN FILING UNDER

Title 35, United States Code, Section 184

Title 37, Code of Federal Regulations, 5.11 & 5.15

GRANTED

The applicant has been granted a license under 35 U.S.C. 184, if the phrase "IF REQUIRED, FOREIGN FILING LICENSE GRANTED" followed by a date appears on this form. Such licenses are issued in all applications where the conditions for issuance of a license have been met, regardless of whether or not a license may be required as

set forth in 37 CFR 5.15. The scope and limitations of this license are set forth in 37 CFR 5.15(a) unless an earlier license has been issued under 37 CFR 5.15(b). The license is subject to revocation upon written notification. The date indicated is the effective date of the license, unless an earlier license of similar scope has been granted under 37 CFR 5.13 or 5.14.

This license is to be retained by the licensee and may be used at any time on or after the effective date thereof unless it is revoked. This license is automatically transferred to any related applications(s) filed under 37 CFR 1.53(d). This license is not retroactive.

The grant of a license does not in any way lessen the responsibility of a licensee for the security of the subject matter as imposed by any Government contract or the provisions of existing laws relating to espionage and the national security or the export of technical data. Licensees should apprise themselves of current regulations especially with respect to certain countries, of other agencies, particularly the Office of Defense Trade Controls, Department of State (with respect to Arms, Munitions and Implements of War (22 CFR 121-128)); the Bureau of Industry and Security, Department of Commerce (15 CFR parts 730-774); the Office of Foreign AssetsControl, Department of Treasury (31 CFR Parts 500+) and the Department of Energy.

NOT GRANTED

No license under 35 U.S.C. 184 has been granted at this time, if the phrase "IF REQUIRED, FOREIGN FILING LICENSE GRANTED" DOES NOT appear on this form. Applicant may still petition for a license under 37 CFR 5.12, if a license is desired before the expiration of 6 months from the filing date of the application. If 6 months has lapsed from the filing date of this application and the licensee has not received any indication of a secrecy order under 35 U.S.C. 181, the licensee may foreign file the application pursuant to 37 CFR 5.15(b).

UNITED STATES PATENT AND TRADEMARK OFFICE

UNITED STATES DEPARTMENT OF COMMERCE
United States Patent and Trademark Office
Address: COMMISSIONER FOR PATENTS
P.O. Box 1450
Alexandria, Virginia 22313-1450
www.uspto.gov

NOTICE OF ALLOWANCE AND FEE(S) DUE

69638 7590 02/06/2009

KAMRATH & ASSOCIATES P.A.
4825 OLSON MEMORIAL HIGHWAY
SUITE 245
GOLDEN VALLEY, MN 55422

EXAMINER	
HANSON, CHARLES D	
ART UNIT	PAPER NUMBER
2916	

DATE MAILED: 02/06/2009

APPLICATION NO.	FILING DATE	FIRST NAMED INVENTOR	ATTORNEY DOCKET NO.	CONFIRMATION NO.
29/324,044	09/05/2008	Gordon Liao	DEW-2933USK	5818

TITLE OF INVENTION: COMBINATION PUSHCHAIR FRAME

APPLN. TYPE	SMALL ENTITY	ISSUE FEE DUE	PUBLICATION FEE DUE	PREV. PAID ISSUE FEE	TOTAL FEE(S) DUE	DATE DUE
nonprovisional	YES	$430	$0	$0	$430	05/06/2009

THE APPLICATION IDENTIFIED ABOVE HAS BEEN EXAMINED AND IS ALLOWED FOR ISSUANCE AS A PATENT. PROSECUTION ON THE MERITS IS CLOSED. THIS NOTICE OF ALLOWANCE IS NOT A GRANT OF PATENT RIGHTS. THIS APPLICATION IS SUBJECT TO WITHDRAWAL FROM ISSUE AT THE INITIATIVE OF THE OFFICE OR UPON PETITION BY THE APPLICANT. SEE 37 CFR 1.313 AND MPEP 1308.

THE ISSUE FEE AND PUBLICATION FEE (IF REQUIRED) MUST BE PAID WITHIN THREE MONTHS FROM THE MAILING DATE OF THIS NOTICE OR THIS APPLICATION SHALL BE REGARDED AS ABANDONED. THIS STATUTORY PERIOD CANNOT BE EXTENDED. SEE 35 U.S.C. 151. THE ISSUE FEE DUE INDICATED ABOVE DOES NOT REFLECT A CREDIT FOR ANY PREVIOUSLY PAID ISSUE FEE IN THIS APPLICATION. IF AN ISSUE FEE HAS PREVIOUSLY BEEN PAID IN THIS APPLICATION (AS SHOWN ABOVE), THE RETURN OF PART B OF THIS FORM WILL BE CONSIDERED A REQUEST TO REAPPLY THE PREVIOUSLY PAID ISSUE FEE TOWARD THE ISSUE FEE NOW DUE.

HOW TO REPLY TO THIS NOTICE:

I. Review the SMALL ENTITY status shown above.

If the SMALL ENTITY is shown as YES, verify your current SMALL ENTITY status:

A. If the status is the same, pay the TOTAL FEE(S) DUE shown above.

B. If the status above is to be removed, check box 5b on Part B - Fee(s) Transmittal and pay the PUBLICATION FEE (if required) and twice the amount of the ISSUE FEE shown above, or

If the SMALL ENTITY is shown as NO:

A. Pay TOTAL FEE(S) DUE shown above, or

B. If applicant claimed SMALL ENTITY status before, or is now claiming SMALL ENTITY status, check box 5a on Part B - Fee(s) Transmittal and pay the PUBLICATION FEE (if required) and 1/2 the ISSUE FEE shown above.

II. PART B - FEE(S) TRANSMITTAL, or its equivalent, must be completed and returned to the United States Patent and Trademark Office (USPTO) with your ISSUE FEE and PUBLICATION FEE (if required). If you are charging the fee(s) to your deposit account, section "4b" of Part B - Fee(s) Transmittal should be completed and an extra copy of the form should be submitted. If an equivalent of Part B is filed, a request to reapply a previously paid issue fee must be clearly made, and delays in processing may occur due to the difficulty in recognizing the paper as an equivalent of Part B.

III. All communications regarding this application must give the application number. Please direct all communications prior to issuance to Mail Stop ISSUE FEE unless advised to the contrary.

IMPORTANT REMINDER: Utility patents issuing on applications filed on or after Dec. 12, 1980 may require payment of maintenance fees. It is patentee's responsibility to ensure timely payment of maintenance fees when due.

PTOL-85 (Rev. 08/07) Approved for use through 08/31/2010.

EVENFLO ET AL. EX1052

PART B - FEE(S) TRANSMITTAL

Complete and send this form, together with applicable fee(s), to: Mail **Mail Stop ISSUE FEE**
Commissioner for Patents
P.O. Box 1450
Alexandria, Virginia 22313-1450
or Fax (571)-273-2885

INSTRUCTIONS: This form should be used for transmitting the ISSUE FEE and PUBLICATION FEE (if required). Blocks 1 through 5 should be completed where appropriate. All further correspondence including the Patent, advance orders and notification of maintenance fees will be mailed to the current correspondence address as indicated unless corrected below or directed otherwise in Block 1, by (a) specifying a new correspondence address; and/or (b) indicating a separate "FEE ADDRESS" for maintenance fee notifications.

CURRENT CORRESPONDENCE ADDRESS (Note: Use Block 1 for any change of address)

69638 7590 02/06/2009

KAMRATH & ASSOCIATES P.A.
4825 OLSON MEMORIAL HIGHWAY
SUITE 245
GOLDEN VALLEY, MN 55422

Note: A certificate of mailing can only be used for domestic mailings of the Fee(s) Transmittal. This certificate cannot be used for any other accompanying papers. Each additional paper, such as an assignment or formal drawing, must have its own certificate of mailing or transmission.

Certificate of Mailing or Transmission

I hereby certify that this Fee(s) Transmittal is being deposited with the United States Postal Service with sufficient postage for first class mail in an envelope addressed to the Mail Stop ISSUE FEE address above, or being facsimile transmitted to the USPTO (571) 273-2885, on the date indicated below.

(Depositor's name)

(Signature)

(Date)

APPLICATION NO.	FILING DATE	FIRST NAMED INVENTOR	ATTORNEY DOCKET NO.	CONFIRMATION NO.
29/324,044	09/05/2008	Gordon Liao	DEW-2933USK	5818

TITLE OF INVENTION: COMBINATION PUSHCHAIR FRAME

APPLN. TYPE	SMALL ENTITY	ISSUE FEE DUE	PUBLICATION FEE DUE	PREV. PAID ISSUE FEE	TOTAL FEE(S) DUE	DATE DUE
nonprovisional	YES	$430	$0	$0	$430	05/06/2009

EXAMINER	ART UNIT	CLASS-SUBCLASS
HANSON, CHARLES D	2916	D12-129000

1. Change of correspondence address or indication of "Fee Address" (37 CFR 1.363).

❑ Change of correspondence address (or Change of Correspondence Address form PTO/SB/122) attached.

❑ "Fee Address" indication (or "Fee Address" Indication form PTO/SB/47; Rev 03-02 or more recent) attached. **Use of a Customer Number is required.**

2. For printing on the patent front page, list

(1) the names of up to 3 registered patent attorneys or agents OR, alternatively,

(2) the name of a single firm (having as a member a registered attorney or agent) and the names of up to 2 registered patent attorneys or agents. If no name is listed, no name will be printed.

1_____

2_____

3_____

3. ASSIGNEE NAME AND RESIDENCE DATA TO BE PRINTED ON THE PATENT (print or type)

PLEASE NOTE: Unless an assignee is identified below, no assignee data will appear on the patent. If an assignee is identified below, the document has been filed for recordation as set forth in 37 CFR 3.11. Completion of this form is NOT a substitute for filing an assignment.

(A) NAME OF ASSIGNEE (B) RESIDENCE: (CITY and STATE OR COUNTRY)

Please check the appropriate assignee category or categories (will not be printed on the patent) : ❑ Individual ❑ Corporation or other private group entity ❑ Government

4a. The following fee(s) are submitted:

❑ Issue Fee

❑ Publication Fee (No small entity discount permitted)

❑ Advance Order - # of Copies _____

4b. Payment of Fee(s): **(Please first reapply any previously paid issue fee shown above)**

❑ A check is enclosed.

❑ Payment by credit card. Form PTO-2038 is attached.

❑ The Director is hereby authorized to charge the required fee(s), any deficiency, or credit any overpayment, to Deposit Account Number _____ (enclose an extra copy of this form).

5. **Change in Entity Status** (from status indicated above)

❑ a. Applicant claims SMALL ENTITY status. See 37 CFR 1.27.

❑ b. Applicant is no longer claiming SMALL ENTITY status. See 37 CFR 1.27(g)(2).

NOTE: The Issue Fee and Publication Fee (if required) will not be accepted from anyone other than the applicant; a registered attorney or agent; or the assignee or other party in interest as shown by the records of the United States Patent and Trademark Office.

Authorized Signature _____ Date _____

Typed or printed name _____ Registration No. _____

This collection of information is required by 37 CFR 1.311. The information is required to obtain or retain a benefit by the public which is to file (and by the USPTO to process) an application. Confidentiality is governed by 35 U.S.C. 122 and 37 CFR 1.14. This collection is estimated to take 12 minutes to complete, including gathering, preparing, and submitting the completed application form to the USPTO. Time will vary depending upon the individual case. Any comments on the amount of time you require to complete this form and/or suggestions for reducing this burden, should be sent to the Chief Information Officer, U.S. Patent and Trademark Office, U.S. Department of Commerce, P.O. Box 1450, Alexandria, Virginia 22313-1450. DO NOT SEND FEES OR COMPLETED FORMS TO THIS ADDRESS. SEND TO: Commissioner for Patents, P.O. Box 1450, Alexandria, Virginia 22313-1450.

Under the Paperwork Reduction Act of 1995, no persons are required to respond to a collection of information unless it displays a valid OMB control number.

UNITED STATES PATENT AND TRADEMARK OFFICE

UNITED STATES DEPARTMENT OF COMMERCE
United States Patent and Trademark Office
Address: COMMISSIONER FOR PATENTS
P.O. Box 1450
Alexandria, Virginia 22313-1450
www.uspto.gov

APPLICATION NO.	FILING DATE	FIRST NAMED INVENTOR	ATTORNEY DOCKET NO.	CONFIRMATION NO.
29/324,044	09/05/2008	Gordon Liao	DEW-2933USK	5818

69638 7590 02/06/2009

KAMRATH & ASSOCIATES P.A.
4825 OLSON MEMORIAL HIGHWAY
SUITE 245
GOLDEN VALLEY, MN 55422

EXAMINER
HANSON, CHARLES D

ART UNIT	PAPER NUMBER
2916	

DATE MAILED: 02/06/2009

Determination of Patent Term Extension or Adjustment under 35 U.S.C. 154 (b)

Design patents have a term measured from the issue date of the patent and the term remains the same length regardless of the time that the application for the design patent was pending. Since the above-identified application is an application for a design patent, the patent is not eligible for Patent Term Extension or Adjustment under 35 U.S.C. 154(b).

Any questions regarding the Patent Term Extension or Adjustment determination should be directed to the Office of Patent Legal Administration at (571)-272-7702. Questions relating to issue and publication fee payments should be directed to the Customer Service Center of the Office of Patent Publication at 1-(888)-786-0101 or (571)-272-4200.

PTOL-85 (Rev. 08/07) Approved for use through 08/31/2010.

Notice of Allowability For A Design Application	Application No. 29/324,044	Applicant(s) LIAO, GORDON	
	Examiner CHARLES D. HANSON	Art Unit 2916	

-- The MAILING DATE of this communication appears on the cover sheet with the correspondence address--

All claims being allowable, PROSECUTION ON THE MERITS IS (OR REMAINS) CLOSED in this application. If not included herewith (or previously mailed), a Notice of Allowance (PTOL-85) or other appropriate communication will be mailed in due course. **THIS NOTICE OF ALLOWABILITY IS NOT A GRANT OF PATENT RIGHTS.** This application is subject to withdrawal from issue at the initiative of the Office or upon petition by the applicant. See 37 CFR 1.313 and MPEP 1308.

1. ☐ This communication is responsive to _____.

2. ☒ The claim is allowed.

3. ☐ Acceptable drawings:

   (a) ☐ The drawings filed on _____ are accepted by the Examiner.

   (b) ☐ Drawing Figures filed on _____ and drawing Figures filed on _____ are accepted by the Examiner.

4. ☐ The claim for foreign priority under 35 U.S.C. § 119(a)-(d) or (f) is acknowledged.

   a) ☐ All b) ☐ Some* c) ☐ None of the:

   1. ☐ Certified copies of the priority documents have been received.
   2. ☐ Certified copies of the priority documents have been received in Application No. _____.
   3. ☐ Copies of the certified copies of the priority documents have been received in this national stage application from the International Bureau (PCT Rule 17.2(a)).

   * Certified copies not received: _____.

Applicant has THREE MONTHS FROM THE "MAILING DATE" of this communication to file a reply complying with the requirements noted below. Failure to timely comply will result in ABANDONMENT of this application.
THIS THREE-MONTH PERIOD IS NOT EXTENDABLE.

5. ☐ A SUBSTITUTE OATH OR DECLARATION must be submitted. Note the attached EXAMINER'S AMENDMENT or NOTICE OF INFORMAL PATENT APPLICATION (PTO-152) which gives reason(s) why the oath or declaration is deficient.

6. ☒ CORRECTED DRAWINGS (as "replacement sheets") must be submitted.

   (a) ☐ including changes required by the Notice of Draftsperson's Patent Drawing Review (PTO-948) attached
   1) ☐ hereto or 2) ☐ to Paper No./Mail Date _____.

   (b) ☒ including changes required by the attached Examiner's Amendment / Comment or in the Office action of Paper No./Mail Date _____.

Identifying indicia such as the application number (see 37 CFR 1.84(c)) should be written on the drawings in the front (not the back) of each sheet. Replacement sheet(s) should be labeled as such in the header according to 37 CFR 1.121(d).

Attachment(s)	
1. ☒ Notice of References Cited (PTO-892)	6. ☐ Interview Summary (PTO-413), Paper No./Mail Date _____ .
2. ☐ Notice of Draftperson's Pate65 nt Drawing Review (PTO-948)	7. ☒ Examiner's Amendment/Comment
3. ☐ Information Disclosure Statements (PTO/SB/08), Paper No./Receipt Date _____	8. ☐ Examiner's Statement of Reasons for Allowance
5. ☐ Notice of Informal Patent Application	9. ☐ Other _____.
NOTE:	

EXAMINER'S AMENDMENT

1. An examiner's amendment to the record appears below. Should the changes and/or additions be unacceptable to applicant, an amendment may be filed as provided by 37 CFR 1.312. To ensure consideration of such an amendment, it MUST be submitted no later than the payment of the issue fee.

Specification

2. For clarity the figure descriptions for Figs. 8 - 13 have been amended to read:

-- Figure 8 is a side view thereof;

Figure 9 is a side view thereof;

Figure 10 is a side view thereof;

Figure 11 is a side view thereof;

Figure 12 is a side view thereof; and,

Figure 13 is a side view thereof. --

The following statement must be used to describe the broken lines on the drawing (MPEP § 1503.02, subsection III):

-- The broken lines Figs. 8 through 13 are included for the purpose of illustrating structural environment and form no part of the claimed design. --

The above statement has been inserted in the specification preceding the claim.

Drawing Objection

3. All the drawing figures are objected to for having rough and merging line quality. Portions of the drawings have lines which are of such close proximity that they become difficult to distinguish as separate lines and/or become merged into one thicker solid line. Examiner recommends increasing the scale of the drawings to allow for clearer and more articulated disclosure of the finer details of the claimed design. Note 37 CFR 1.84(k) and (l).

4. The drawings must be redrawn on a larger scale. Simply enlarging the current figures will not be acceptable. Also, submissions by facsimile are rarely acceptable since the quality is very poor. Examiner strongly suggests applicant submit replacement drawings via US mail or electronic filing.

5. Corrected drawing sheets are required in reply to the Office action to avoid abandonment of the application. Any amended replacement drawing sheet should include all of the figures appearing on the immediate prior version of the sheet, even if only one figure is being amended. The figure or figure number of an amended drawing should not be labeled as "amended." If a drawing figure is to be canceled, the appropriate figure must be removed from the replacement sheet, and where necessary, the remaining figures must be renumbered and appropriate changes made to the brief description of the several views of the drawings for consistency. Additional replacement sheets may be necessary to show the renumbering of the remaining figures. If all the figures on a drawing sheet are canceled, a replacement sheet is not required. A marked-up copy of the drawing sheet (labeled as "Annotated Sheet") including an annotation showing that all the figures on that drawing sheet have been canceled must be presented in the amendment or remarks section that explains the change to the drawings. Each drawing sheet submitted after the filing date of an application must be labeled in the top margin as either "Replacement Sheet" or "New Sheet" pursuant to 37 CFR 1.121(d).

6. **When preparing new drawings in compliance with the requirement therefor, care must be exercised to avoid introduction of anything which could be construed to be new matter prohibited by 35 U.S.C. 132 and 37 CFR 1.121.**

7. The necessity for good drawings in a design patent application cannot be overemphasized. As the drawing constitutes the whole disclosure of the design, it is of utmost importance that it be so well executed both as to clarity of showing and completeness, that nothing regarding the design sought to be patented is left to conjecture. An insufficient drawing may be fatal to validity (35 U.S.C. 112, first paragraph). Moreover, an insufficient drawing may have a negative effect with respect to the effective filing date of a continuing application.

Conclusion

8. The claim is allowed with the above amendments to the specification, and the drawing must be properly corrected before payment of the issue fee.

Contact Information

9. Any inquiry concerning this communication or earlier communications from the examiner should be directed to CHARLES D. HANSON whose telephone number is (571)272-4312. The examiner can normally be reached on Mon - Fri, 10:00 am - 4:00 pm.

10. If attempts to reach the examiner by telephone are unsuccessful, the examiner's supervisor, Ian Simmons can be reached on 571-272-2658. The fax phone number for the organization where this application or proceeding is assigned is 571-273-8300.

11. Information regarding the status of an application may be obtained from the Patent Application Information Retrieval (PAIR) system. Status information for published applications may be obtained from either Private PAIR or Public PAIR. Status information for unpublished applications is available through Private PAIR only. For more information about the PAIR system, see http://pair-direct.uspto.gov. Should you have questions on access to the Private PAIR system, contact the Electronic Business Center (EBC) at 866-217-9197 (toll-free). If you would like assistance from a USPTO Customer Service Representative or access to the automated information system, call 800-786-9199 (IN USA OR CANADA) or 571-272-1000.

/C. D. H./
Examiner, Art Unit 2916

/Charles A. Rademaker/
Primary Examiner, Art Unit 2916

Notice of References Cited	Application/Control No. 29/324,044	Applicant(s)/Patent Under Reexamination LIAO, GORDON	
	Examiner CHARLES D. HANSON	Art Unit 2916	Page 1 of 1

U.S. PATENT DOCUMENTS

*		Document Number Country Code-Number-Kind Code	Date MM-YYYY	Name	Classification
*	A	US-D369,992 S	05-1996	Baechler, Philip A.	D12/129
*	B	US-6,896,286 B2	05-2005	Lin, Wan-Hsing	280/650
*	C	US-D519,422 S	04-2006	Huang, Mien Chen	D12/129
*	D	US-D558,099 S	12-2007	Yang, Cheng-Fan	D12/129
*	E	US-D566,013 S	04-2008	Wang, Kun	D12/129
*	F	US-D578,045 S	10-2008	Liao, Gordon	D12/129
*	G	US-D579,827 S	11-2008	Lake, Jon	D12/129
	H	US-			
	I	US-			
	J	US-			
	K	US-			
	L	US-			
	M	US-			

FOREIGN PATENT DOCUMENTS

*		Document Number Country Code-Number-Kind Code	Date MM-YYYY	Country	Name	Classification
	N					
	O					
	P					
	Q					
	R					
	S					
	T					

NON-PATENT DOCUMENTS

*		Include as applicable: Author, Title Date, Publisher, Edition or Volume, Pertinent Pages)
	U	
	V	
	W	
	X	

*A copy of this reference is not being furnished with this Office action. (See MPEP § 707.05(a).)
Dates in MM-YYYY format are publication dates. Classifications may be US or foreign.

UNITED STATES PATENT AND TRADEMARK OFFICE

UNITED STATES DEPARTMENT OF COMMERCE
United States Patent and Trademark Office
Address: COMMISSIONER FOR PATENTS
P.O. Box 1450
Alexandria, Virginia 22313-1450
www.uspto.gov

BIB DATA SHEET

CONFIRMATION NO. 5818

SERIAL NUMBER	FILING or 371(c) DATE	CLASS	GROUP ART UNIT	ATTORNEY DOCKET NO.
29/324,044	09/05/2008 **RULE**	D12	2916	DEW-2933USK

APPLICANTS
Gordon Liao, Yung Kang City, TAIWAN;

**** CONTINUING DATA ***************************

**** FOREIGN APPLICATIONS ***************************

**** IF REQUIRED, FOREIGN FILING LICENSE GRANTED **** ** SMALL ENTITY **
09/16/2008

Foreign Priority claimed	☐ Yes ☑ No		STATE OR COUNTRY	SHEETS DRAWINGS	TOTAL CLAIMS	INDEPENDENT CLAIMS
35 USC 119(a-d) conditions met	☐ Yes ☑ No	☐ Met after Allowance	TAIWAN	13	1	1
Verified and Acknowledged	/CHARLES D HANSON/ Examiner's Signature	Initials				

ADDRESS

KAMRATH & ASSOCIATES P.A.
4825 OLSON MEMORIAL HIGHWAY
SUITE 245
GOLDEN VALLEY, MN 55422
UNITED STATES

TITLE

Combination Pushchair Frame

FILING FEE RECEIVED		
220	FEES: Authority has been given in Paper No._____ to charge/credit DEPOSIT ACCOUNT No._____ for following:	☐ All Fees ☐ 1.16 Fees (Filing) ☐ 1.17 Fees (Processing Ext. of time) ☐ 1.18 Fees (Issue) ☐ Other _____ ☐ Credit

BIB (Rev. 05/07).

Issue Classification	Application/Control No.	Applicant(s)/Patent Under Reexamination
	29324044	LIAO, GORDON
	Examiner	**Art Unit**
	CHARLES D HANSON	2916

ORIGINAL		INTERNATIONAL CLASSIFICATION	
CLASS	SUBCLASS	CLAIMED	NON-CLAIMED
D12	129	12 / 12	

CROSS REFERENCE(S)

CLASS	SUBCLASS (ONE SUBCLASS PER BLOCK)				
D12	133				

☒ **Claims renumbered in the same order as presented by applicant** ☐ **CPA** ☐ **T.D.** ☐ **R.1.47**

Final	Original	Final	Original	Final	Original	Final	Original	Final	Original	Final	Original	Final	Original	Final	Original

/CHARLES D HANSON/ Examiner.Art Unit 2916 1/30/2009 (Assistant Examiner) (Date)	☒ Use images from artifact folder ☒ Do not use images from artifact folder	**Total Claims Allowed:** 1
/CHARLES A RADEMAKER/ Primary Examiner.Art Unit 2916 01/30/2009 (Primary Examiner) (Date)	O.G. Print Claim(s) 1	O.G. Print Figure 1

Search Notes	Application/Control No.	Applicant(s)/Patent Under Reexamination
	29324044	LIAO, GORDON
	Examiner	**Art Unit**
	CHARLES D HANSON	2916

SEARCHED

Class	Subclass	Date	Examiner
D12	128-133	1/14/2009	CDH
296	65.03,65.04	1/14/2009	CDH
224	409	1/14/2009	CDH
297	DIG4	1/14/2009	CDH
280	62,647-650,29,200,47.38,250.1,259,642,658	1/14/2009	CDH

SEARCH NOTES

Search Notes	Date	Examiner
PALM inventor name search	1/14/2009	CDH
All references forward and backward searched	1/14/2009	CDH
Google image search: electric pushchair, buggy	1/14/2009	CDH

INTERFERENCE SEARCH

Class	Subclass	Date	Examiner
D12	129	1/14/2009	CDH

Client Docket No. DEW-2933USK

IN THE UNITED STATES PATENT AND TRADEMARK OFFICE

Re App	:	Gordon Liao	:	Examiner:	HANSON, CHARLES D
Serial No.	:	29/324,044	:	Art Unit: 2916	
Filed	:	09/05/2008	:	Confirmation No. 5818	
For	:	COMBINATION PUSHCHAIR FRAME			

Commissioner for Patents
P.O. Box 1450
Alexandria, VA 22313-1450

I CERTIFY THAT THIS PAPER IS BEING SUBMITTED USING THE OFFICE ELECTRONIC FILING SYSTEM IN ACCORDANCE WITH THE OFFICE ELECTRONIC FILING SYSTEM REQUIRMENTS ON MARCH 24, 2009 (37 CFR 1.8a)

Alan Kamrath

TRANSMITTAL OF FORMAL DRAWINGS

Dear Sir:

Transmitted herewith are thirteen (13) sheets of formal drawings of Figures 1-13 for the above-identified patent application.

The fees have been calculated and no further fees are believed to be required. The Commissioner is hereby authorized to charge any deficiency or credit any overpayment to Deposit Account No. 50-0620.

Respectfully submitted,
Gordon Liao

Alan Kamrath

Alan D. Kamrath
Kamrath & Associates, P.A.
Registration No. 28,227
4825 Olson Memorial Hwy, Suite 245
Golden Valley, MN 55422
Telephone: 763-746-1599
Facsimile: 763-746-8125

REPLACEMENT SHEET

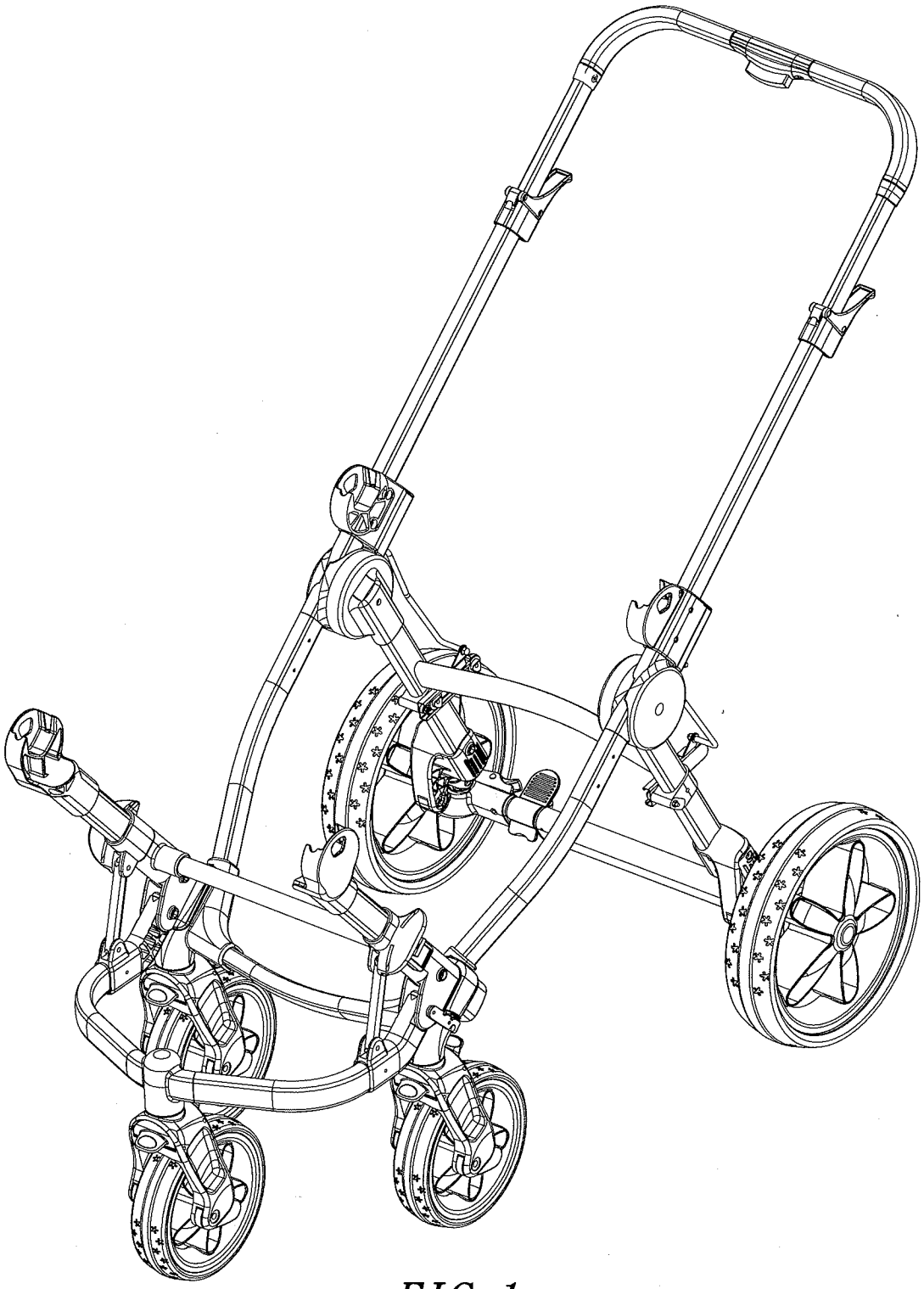

FIG. 1

REPLACEMENT SHEET

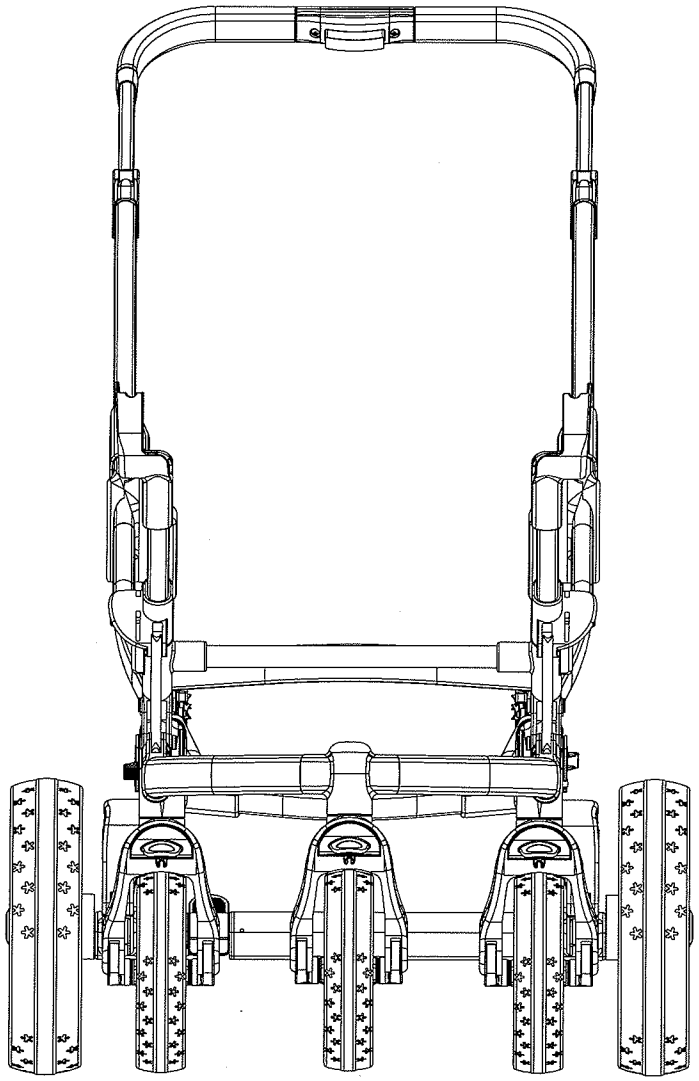

FIG. 2

REPLACEMENT SHEET

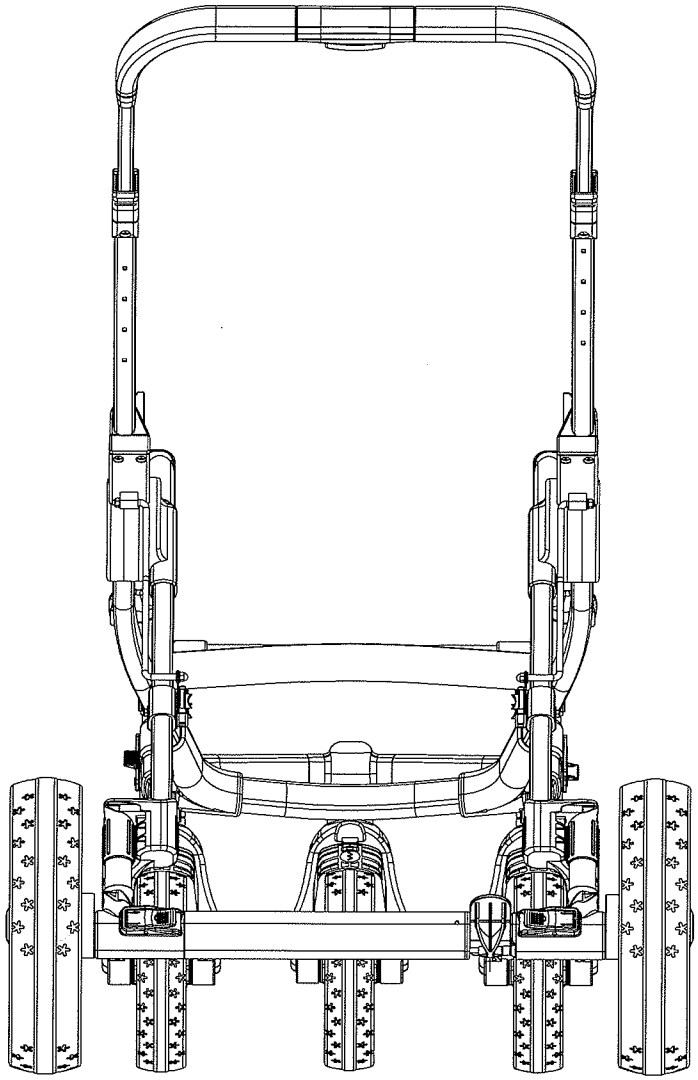

FIG. 3

REPLACEMENT SHEET

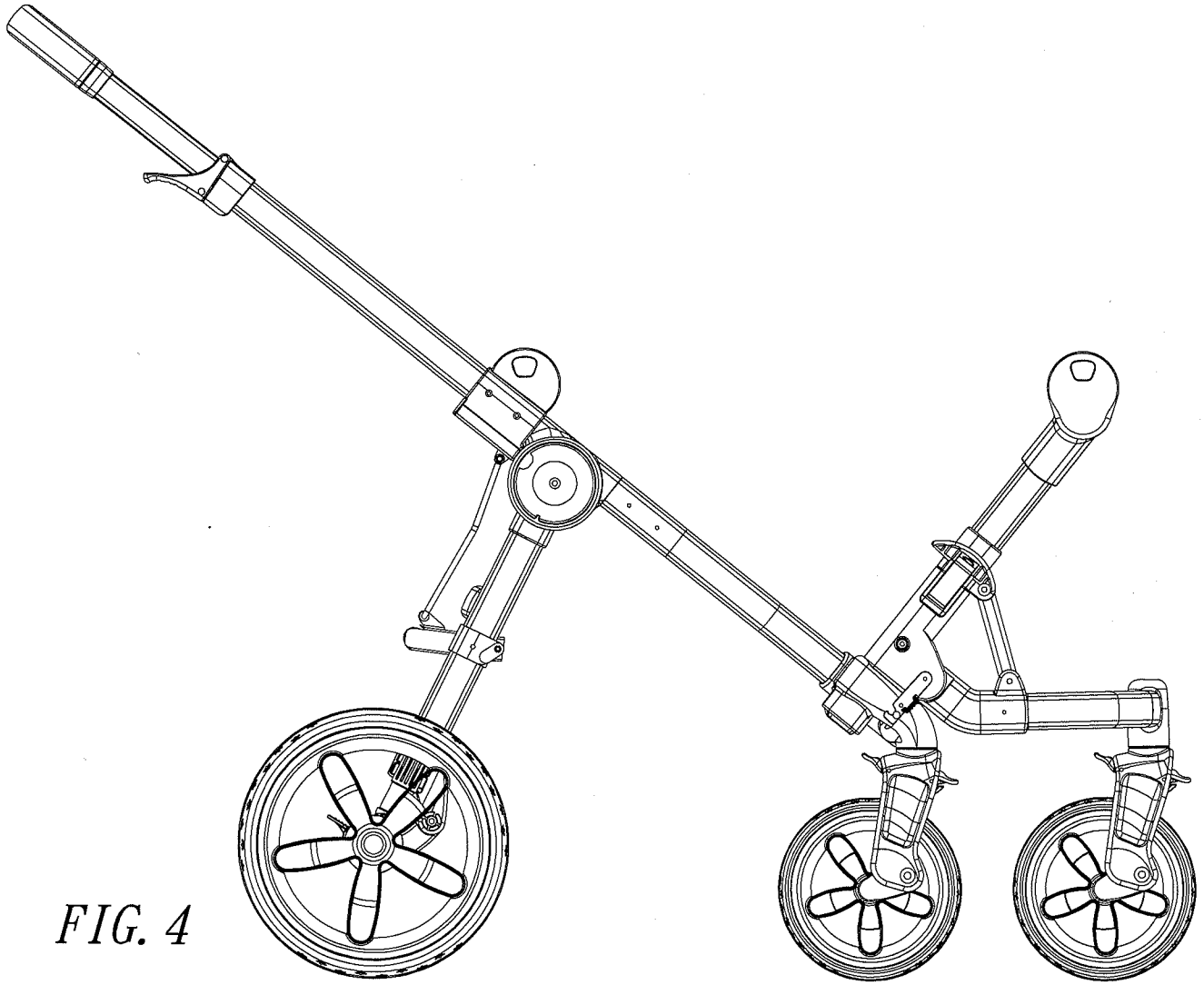

FIG. 4

REPLACEMENT SHEET

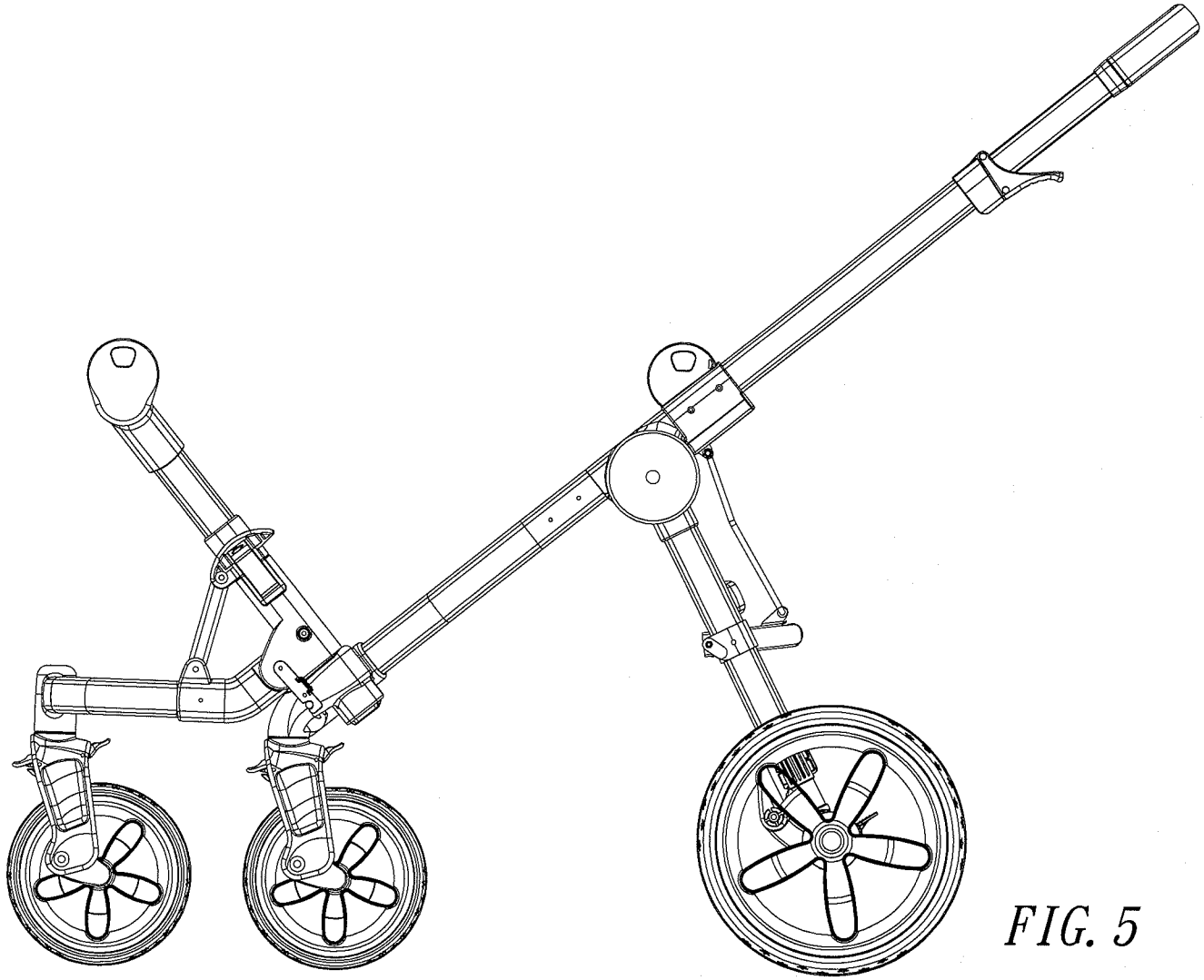

FIG. 5

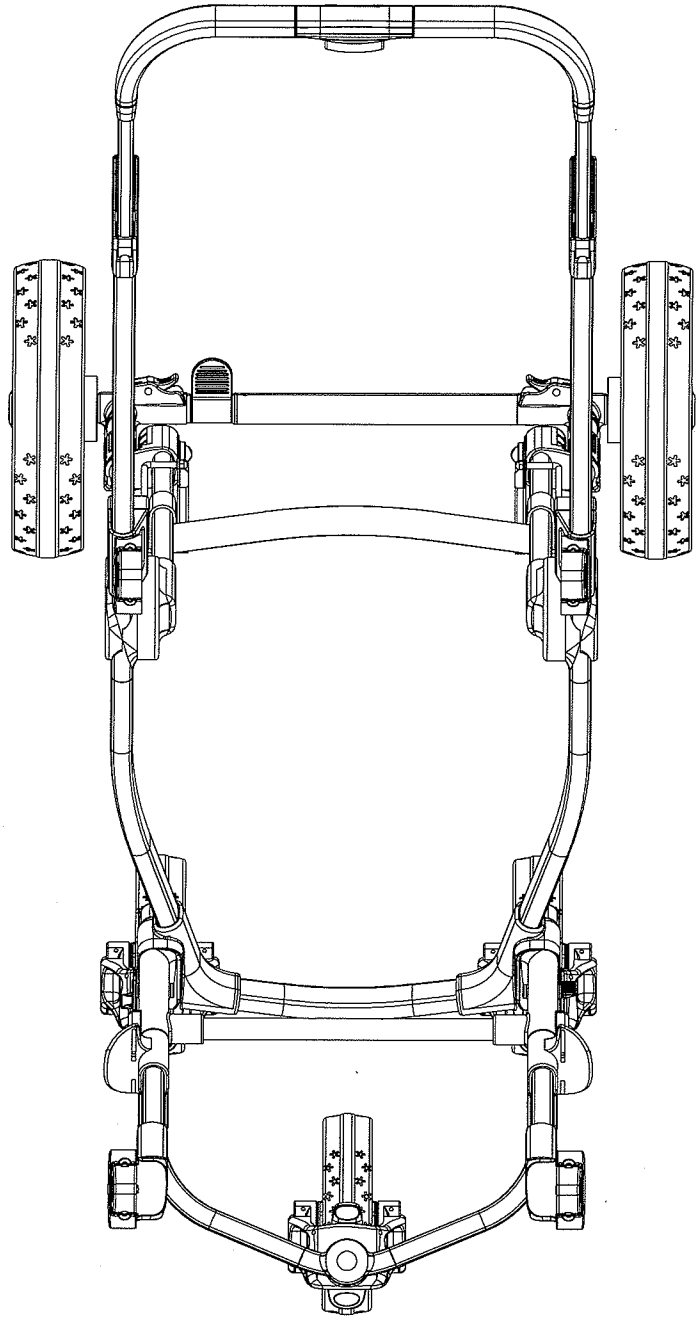

FIG. 6

REPLACEMENT SHEET

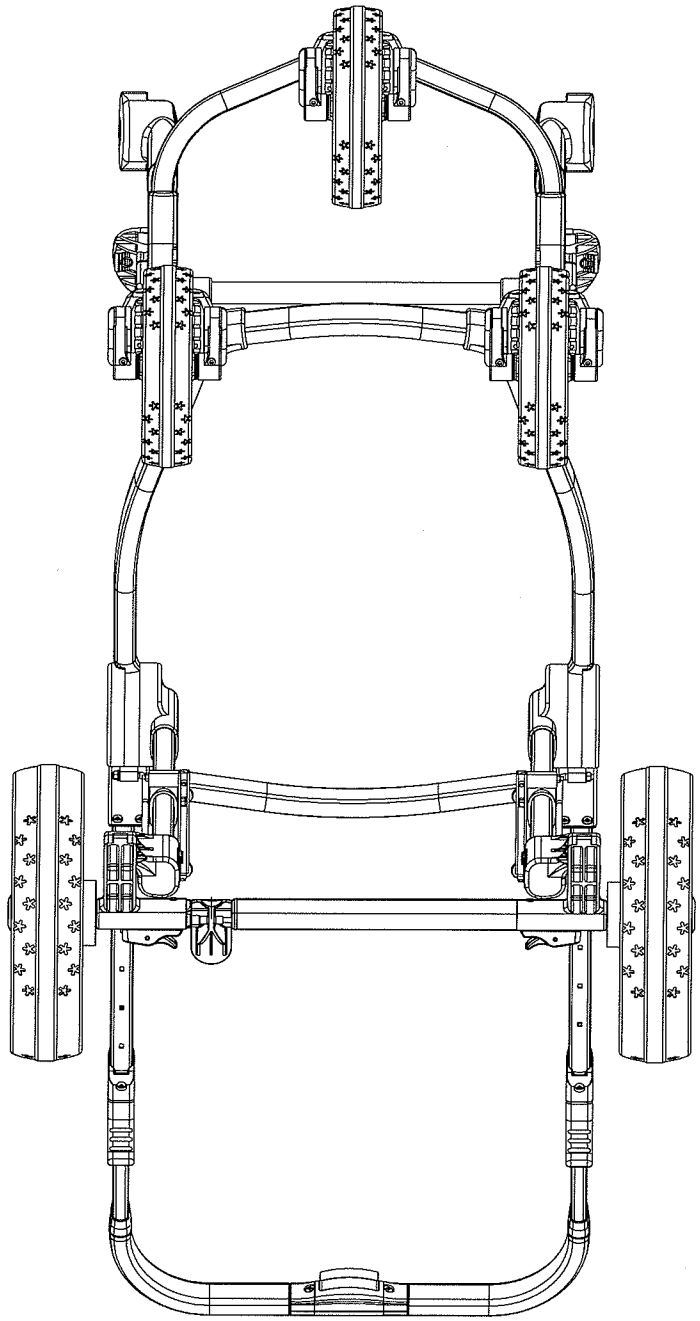

FIG. 7

REPLACEMENT SHEET

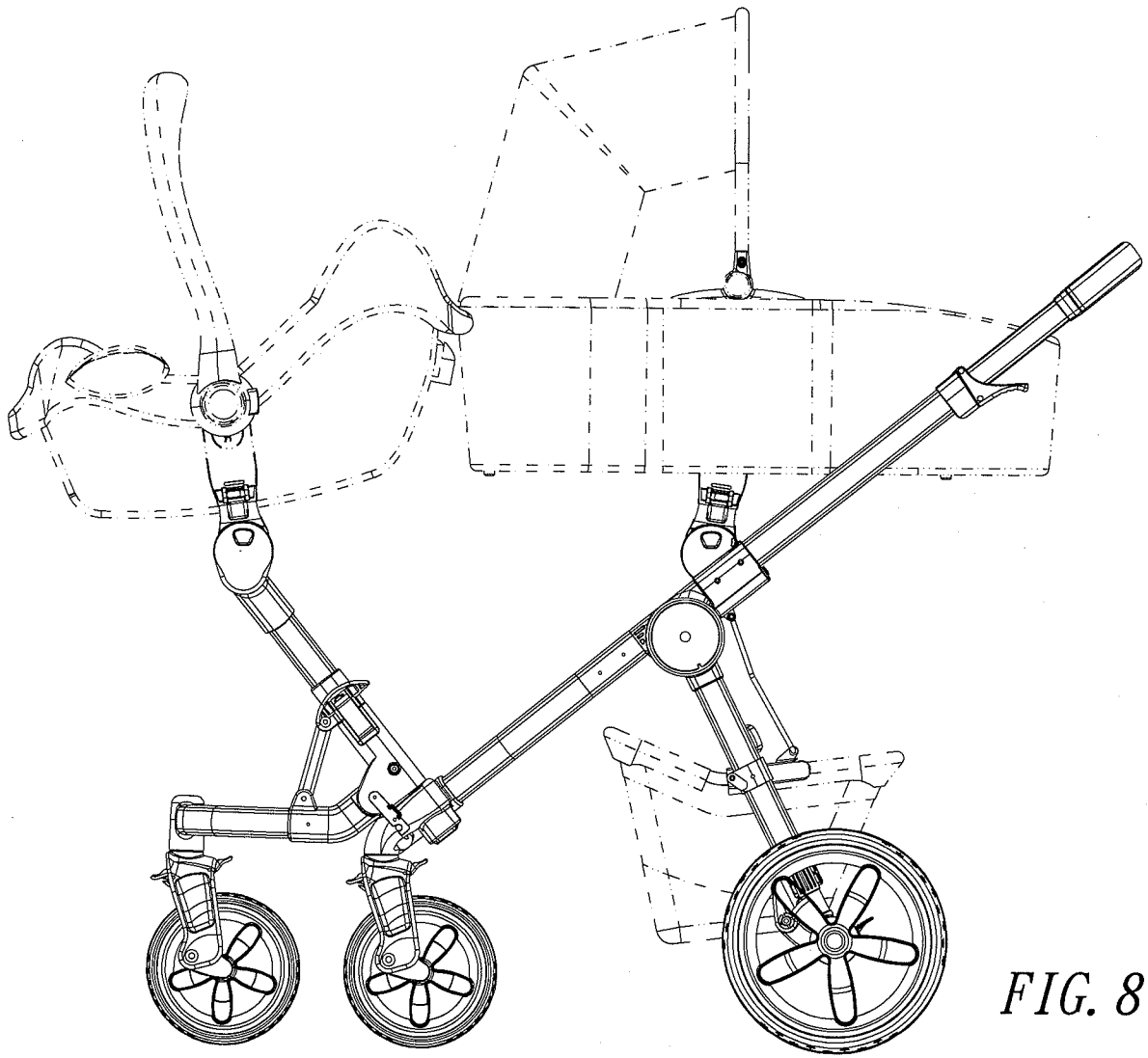

FIG. 8

REPLACEMENT SHEET

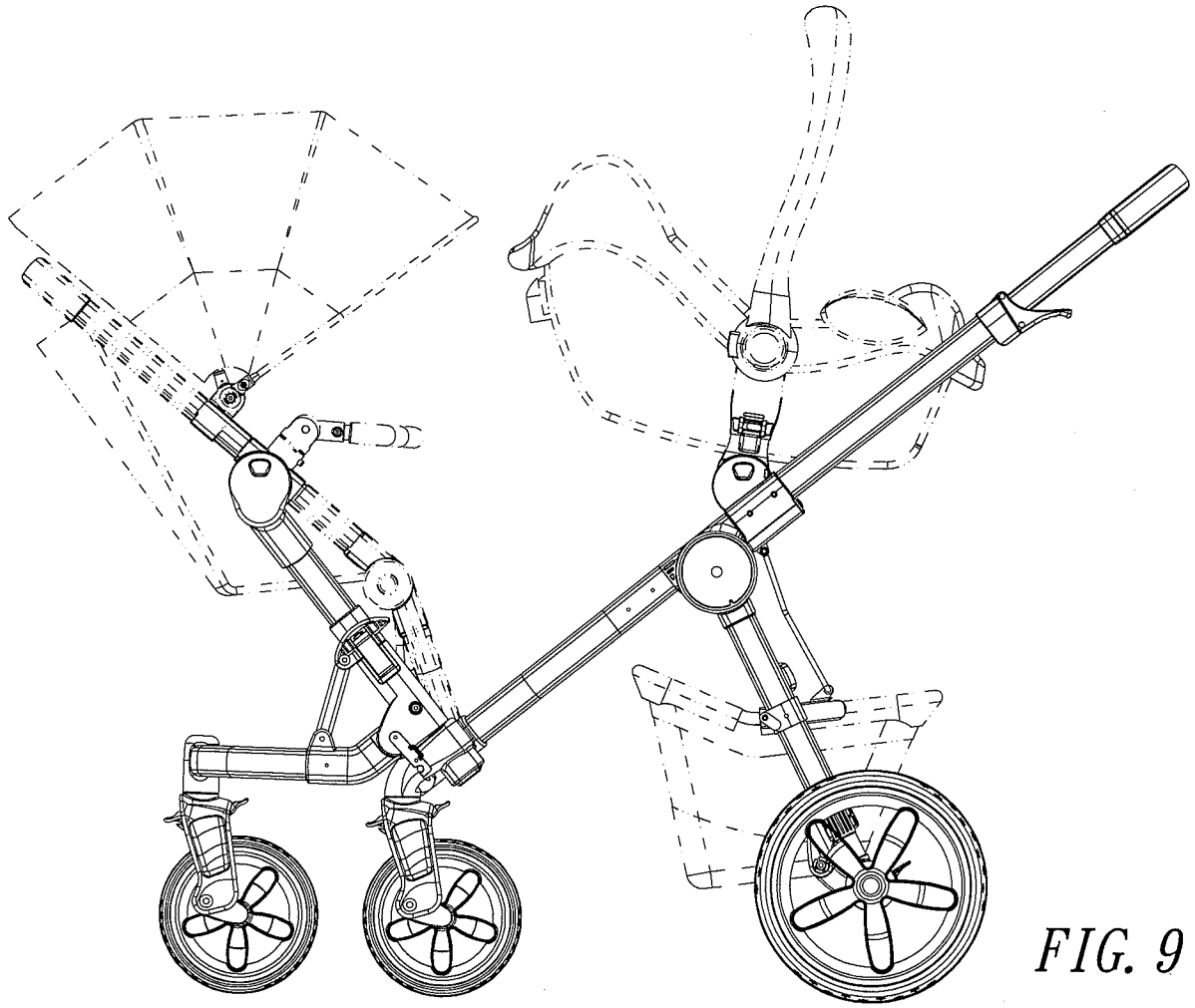

FIG. 9

REPLACEMENT SHEET

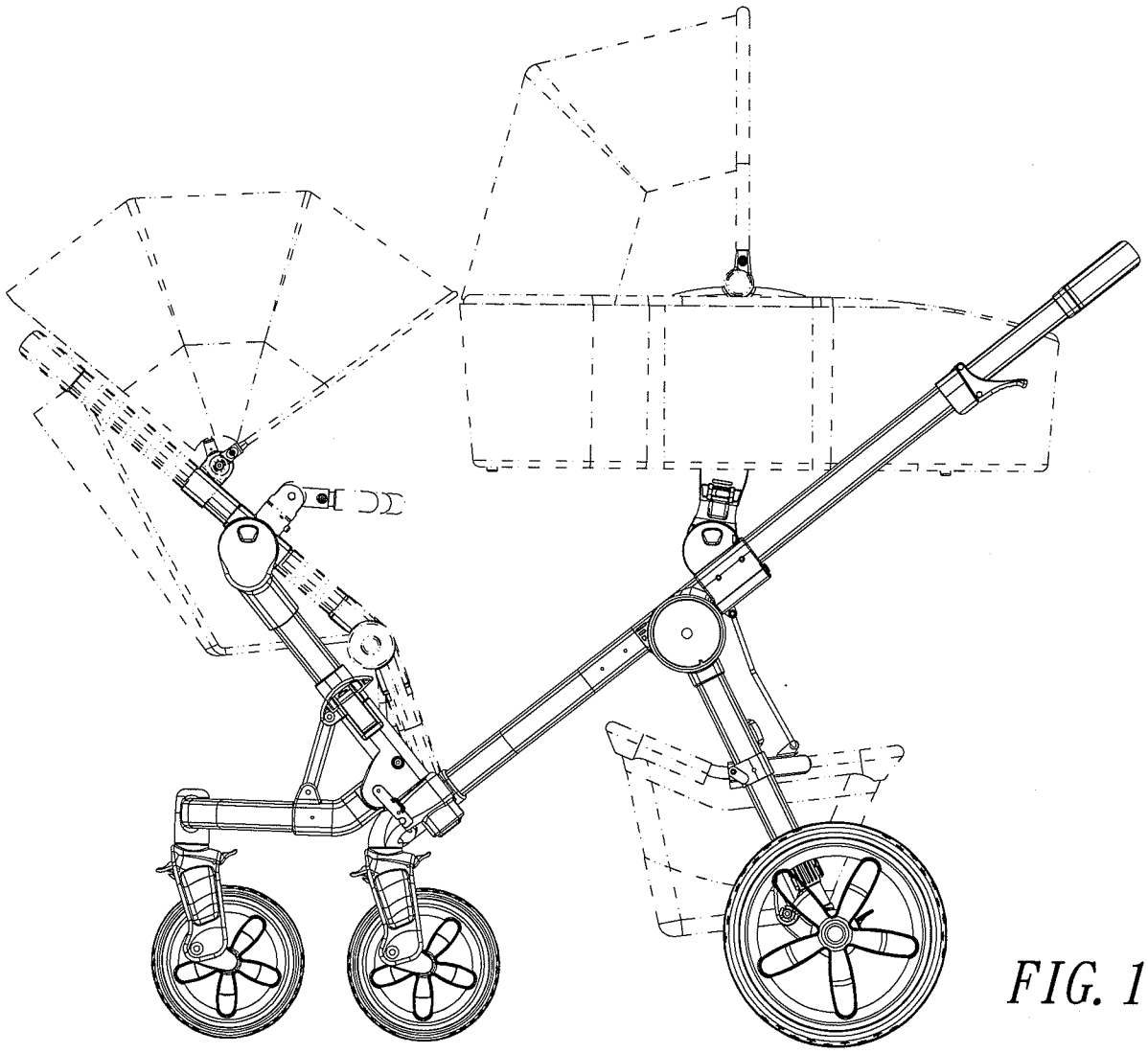

FIG. 10

REPLACEMENT SHEET

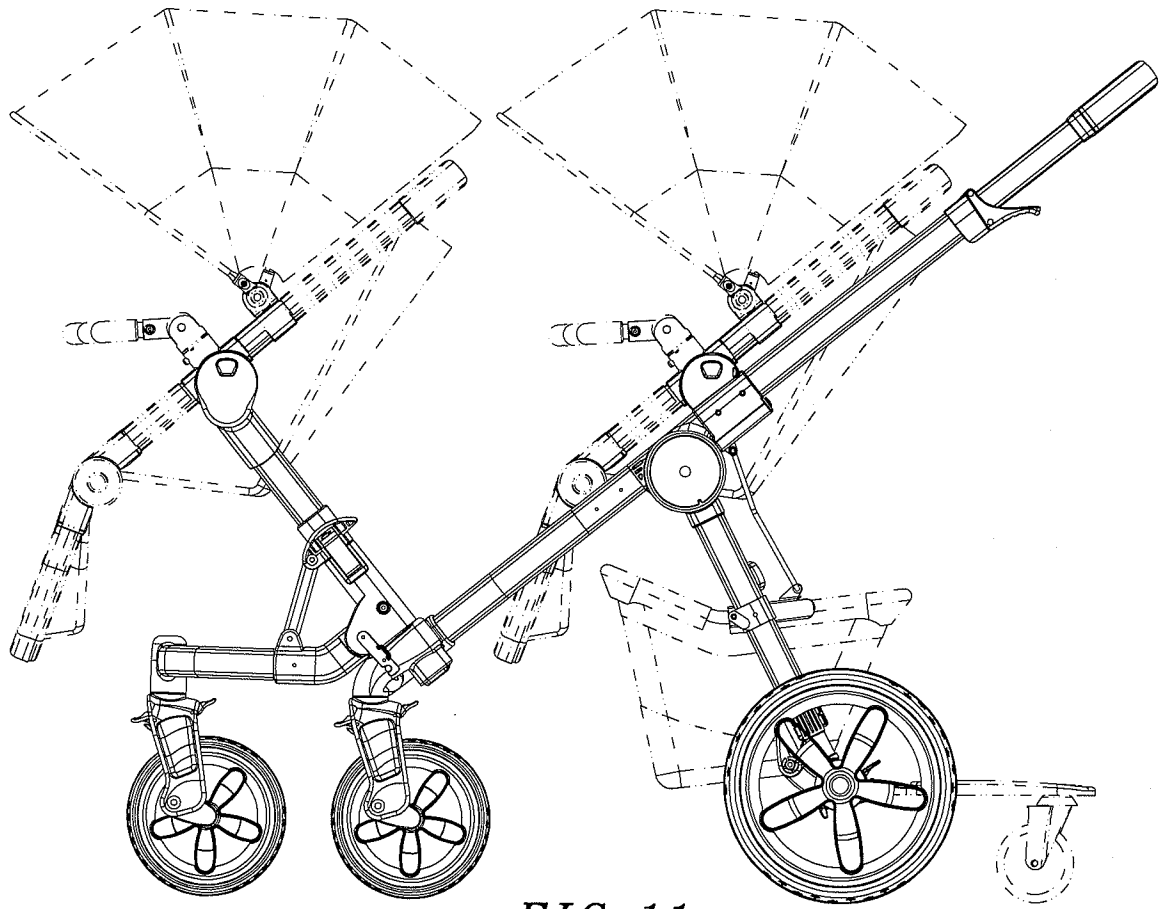

FIG. 11

REPLACEMENT SHEET

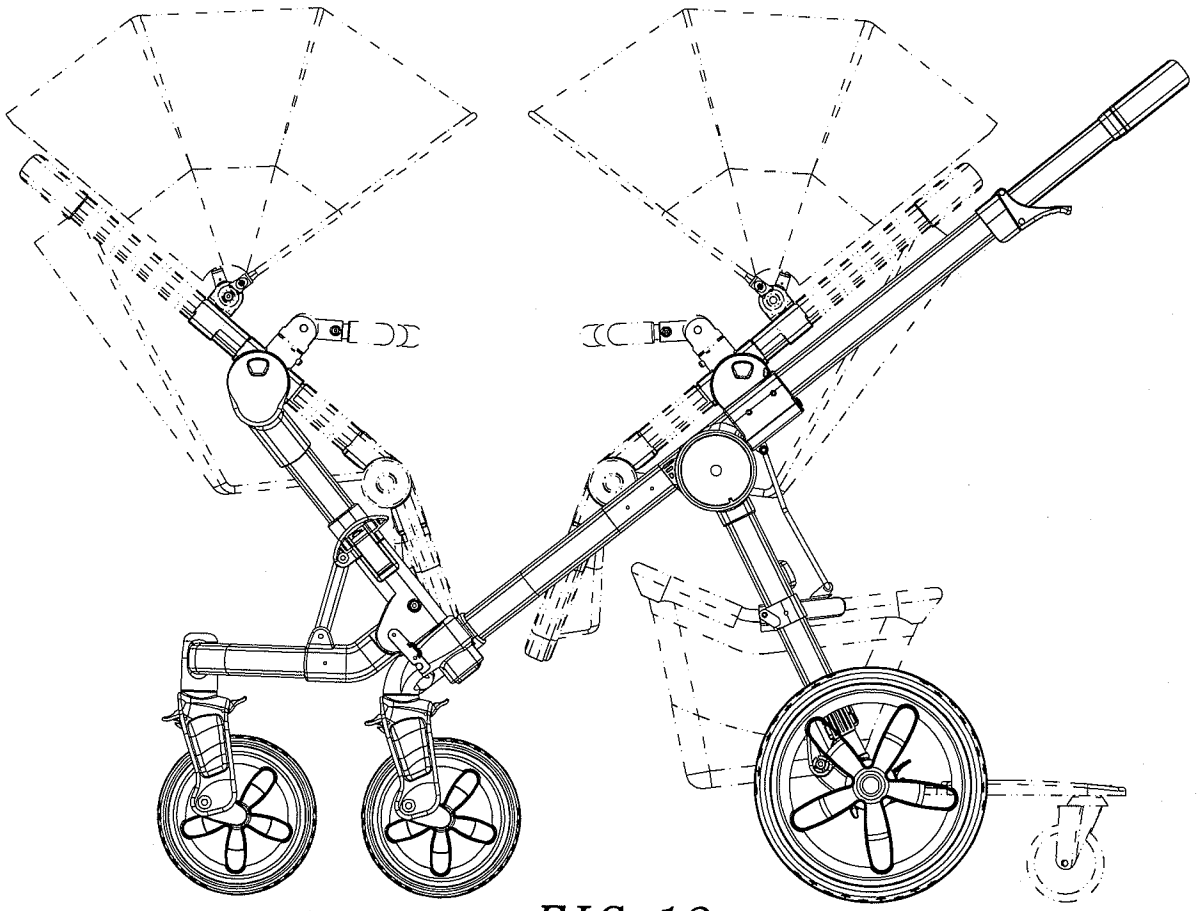

FIG. 12

REPLACEMENT SHEET

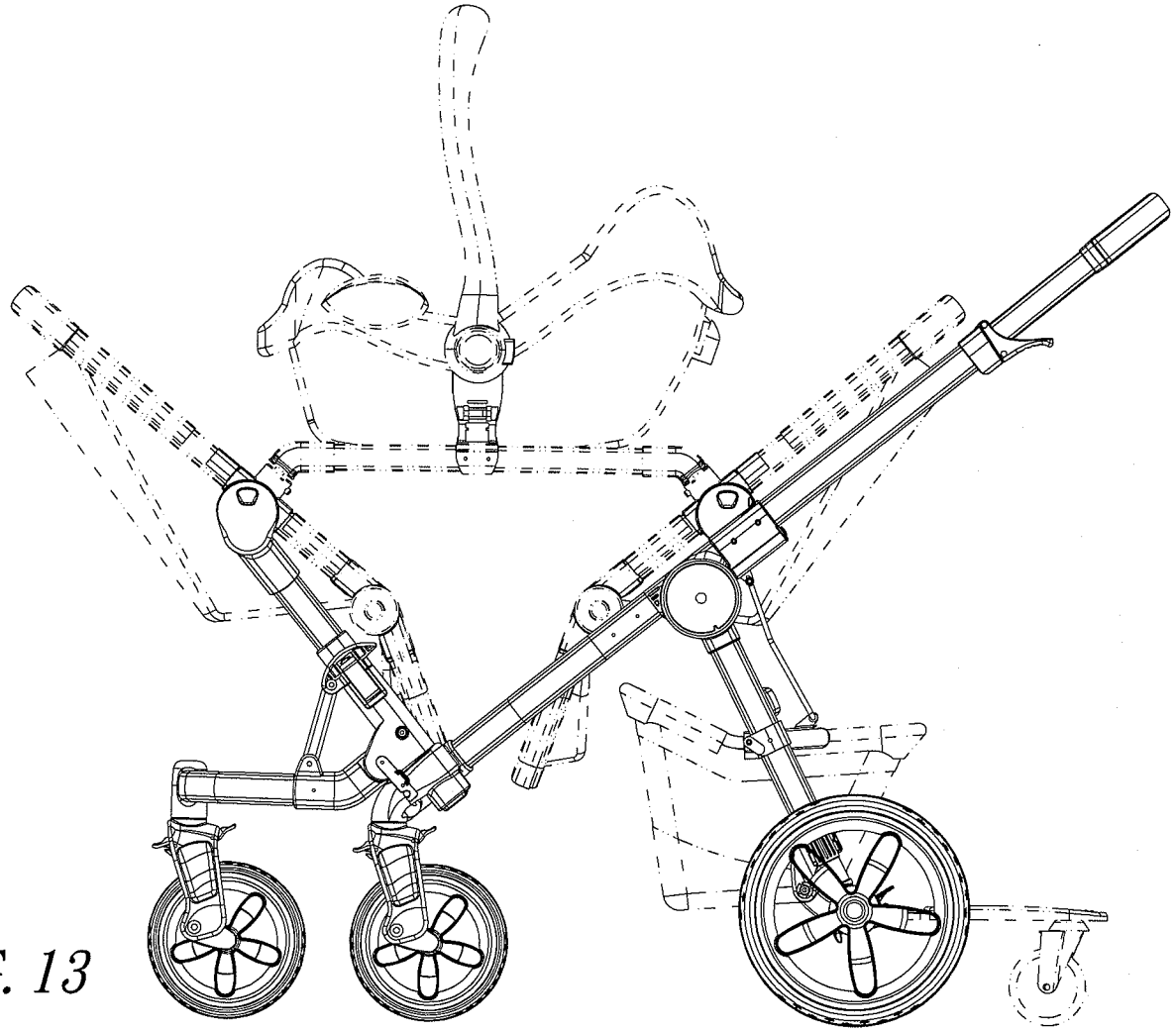

FIG. 13

Electronic Acknowledgement Receipt

EFS ID:	5021658
Application Number:	29324044
International Application Number:	
Confirmation Number:	5818
Title of Invention:	COMBINATION PUSHCHAIR FRAME
First Named Inventor/Applicant Name:	Gordon Liao
Customer Number:	69638
Filer:	Alan Dale Kamrath
Filer Authorized By:	
Attorney Docket Number:	DEW-2933USK
Receipt Date:	24-MAR-2009
Filing Date:	05-SEP-2008
Time Stamp:	12:00:03
Application Type:	Design

Payment information:

Submitted with Payment	no

File Listing:

Document Number	Document Description	File Name	File Size(Bytes)/ Message Digest	Multi Part /.zip	Pages (if appl.)
1		DEW_2933USK_replacemtshts.pdf	548976 cc008fa6f2f2a2fd22c3ccd35fdbea344bd9d57b	yes	14

	Multipart Description/PDF files in .zip description		
	Document Description	**Start**	**End**
	Post Allowance Communication - Incoming	1	1
	Drawings-only black and white line drawings	2	14

Warnings:

Information:

Total Files Size (in bytes):	548976

This Acknowledgement Receipt evidences receipt on the noted date by the USPTO of the indicated documents, characterized by the applicant, and including page counts, where applicable. It serves as evidence of receipt similar to a Post Card, as described in MPEP 503.

New Applications Under 35 U.S.C. 111
If a new application is being filed and the application includes the necessary components for a filing date (see 37 CFR 1.53(b)-(d) and MPEP 506), a Filing Receipt (37 CFR 1.54) will be issued in due course and the date shown on this Acknowledgement Receipt will establish the filing date of the application.

National Stage of an International Application under 35 U.S.C. 371
If a timely submission to enter the national stage of an international application is compliant with the conditions of 35 U.S.C. 371 and other applicable requirements a Form PCT/DO/EO/903 indicating acceptance of the application as a national stage submission under 35 U.S.C. 371 will be issued in addition to the Filing Receipt, in due course.

New International Application Filed with the USPTO as a Receiving Office
If a new international application is being filed and the international application includes the necessary components for an international filing date (see PCT Article 11 and MPEP 1810), a Notification of the International Application Number and of the International Filing Date (Form PCT/RO/105) will be issued in due course, subject to prescriptions concerning national security, and the date shown on this Acknowledgement Receipt will establish the international filing date of the application.

SCORE Placeholder Sheet for IFW Content

Application Number: 29324044 Document Date: 3/24/2009 12:00:03 PM

The presence of this form in the IFW record indicates that the following document type was received in electronic format on the date identified above. This content is stored in the SCORE database.

- Design Drawings

Since this was an electronic submission, there is no physical artifact folder, no artifact folder is recorded in PALM, and no paper documents or physical media exist. The TIFF images in the IFW record were created from the original documents that are stored in SCORE.

To access the documents in the SCORE database, refer to instructions developed by SIRA.

At the time of document entry (noted above):

- Examiners may access SCORE content via the eDAN interface.
- Other USPTO employees can bookmark the current SCORE URL (http://es/ScoreAccessWeb/).
- External customers may access SCORE content via the Public and Private PAIR interfaces.

Form Revision Date: February 8, 2006

PART B - FEE(S) TRANSMITTAL

Complete and send this form, together with applicable fee(s), to: Mail Mail Stop ISSUE FEE
Commissioner for Patents
P.O. Box 1450
Alexandria, Virginia 22313-1450
or Fax (571)-273-2885

INSTRUCTIONS: This form should be used for transmitting the ISSUE FEE and PUBLICATION FEE (if required). Blocks 1 through 5 should be completed where appropriate. All further correspondence including the Patent, advance orders and notification of maintenance fees will be mailed to the current correspondence address as indicated unless corrected below or directed otherwise in Block 1, by (a) specifying a new correspondence address; and/or (b) indicating a separate "FEE ADDRESS" for maintenance fee notifications.

CURRENT CORRESPONDENCE ADDRESS (Note: Use Block 1 for any change of address)

69638 7590 02/06/2009
KAMRATH & ASSOCIATES P.A.
4825 OLSON MEMORIAL HIGHWAY
SUITE 245
GOLDEN VALLEY, MN 55422

OIPE IAP18 APR 30 2009 PATENT & TRADEMARK OFFICE

Note: A certificate of mailing can only be used for domestic mailings of the Fee(s) Transmittal. This certificate cannot be used for any other accompanying papers. Each additional paper, such as an assignment or formal drawing, must have its own certificate of mailing or transmission.

Certificate of Mailing or Transmission
I hereby certify that this Fee(s) Transmittal is being deposited with the United States Postal Service with sufficient postage for first class mail in an envelope addressed to the Mail Stop ISSUE FEE address above, or being facsimile transmitted to the USPTO (571) 273-2885, on the date indicated below.

Alan Kamrath (Depositor's name)
Alan Kamrath (Signature)
4-30- 2009 (Date)

APPLICATION NO.	FILING DATE	FIRST NAMED INVENTOR	ATTORNEY DOCKET NO.	CONFIRMATION NO.
29/324,044	09/05/2008	Gordon Liao	DEW-2933USK	5818

TITLE OF INVENTION: COMBINATION PUSHCHAIR FRAME

APPLN. TYPE	SMALL ENTITY	ISSUE FEE DUE	PUBLICATION FEE DUE	PREV. PAID ISSUE FEE	TOTAL FEE(S) DUE	DATE DUE
nonprovisional	YES	$430	$0	$0	$430	05/06/2009

EXAMINER	ART UNIT	CLASS-SUBCLASS
HANSON, CHARLES D	2916	D12-129000

1. Change of correspondence address or indication of "Fee Address" (37 CFR 1.363).
☐ Change of correspondence address (or Change of Correspondence Address form PTO/SB/122) attached.
☐ "Fee Address" indication (or "Fee Address" Indication form PTO/SB/47; Rev 03-02 or more recent) attached. Use of a Customer Number is required.

2. For printing on the patent front page, list
(1) the names of up to 3 registered patent attorneys or agents OR, alternatively,
(2) the name of a single firm (having as a member a registered attorney or agent) and the names of up to 2 registered patent attorneys or agents. If no name is listed, no name will be printed.
1 Alan Kamrath
2 Kamrath & Associates PA
3

3. ASSIGNEE NAME AND RESIDENCE DATA TO BE PRINTED ON THE PATENT (print or type)
PLEASE NOTE: Unless an assignee is identified below, no assignee data will appear on the patent. If an assignee is identified below, the document has been filed for recordation as set forth in 37 CFR 3.11. Completion of this form is NOT a substitute for filing an assignment.

(A) NAME OF ASSIGNEE: UNIQUE PRODUCT & DESIGN CO.,LTD.
(B) RESIDENCE: (CITY and STATE OR COUNTRY): TAINAN HSIEN, TAIWAN

Please check the appropriate assignee category or categories (will not be printed on the patent): ☐ Individual ☒ Corporation or other private group entity ☐ Government

4a. The following fee(s) are submitted:
☒ Issue Fee
☐ Publication Fee (No small entity discount permitted)
☐ Advance Order - # of Copies _____

4b. Payment of Fee(s): (Please first reapply any previously paid Issue fee shown above)
☐ A check is enclosed.
☒ Payment by credit card. Form PTO-2038 is attached.
☐ The Director is hereby authorized to charge the required fee(s), any deficiency, or credit any overpayment, to Deposit Account Number _____ (enclose an extra copy of this form).

5. Change in Entity Status (from status indicated above)
☐ a. Applicant claims SMALL ENTITY status. See 37 CFR 1.27.
☐ b. Applicant is no longer claiming SMALL ENTITY status. See 37 CFR 1.27(g)(2).

NOTE: The Issue Fee and Publication Fee (if required) will not be accepted from anyone other than the applicant; a registered attorney or agent; or the assignee or other party in interest as shown by the records of the United States Patent and Trademark Office.

Authorized Signature Alan Kamrath Date 4-30- 2009
Typed or printed name Alan Kamrath Registration No. 28,227

This collection of information is required by 37 CFR 1.311. The information is required to obtain or retain a benefit by the public which is to file (and by the USPTO to process) an application. Confidentiality is governed by 35 U.S.C. 122 and 37 CFR 1.14. This collection is estimated to take 12 minutes to complete, including gathering, preparing, and submitting the completed application form to the USPTO. Time will vary depending upon the individual case. Any comments on the amount of time you require to complete this form and/or suggestions for reducing this burden, should be sent to the Chief Information Officer, U.S. Patent and Trademark Office, U.S. Department of Commerce, P.O. Box 1450, Alexandria, Virginia 22313-1450. DO NOT SEND FEES OR COMPLETED FORMS TO THIS ADDRESS. SEND TO: Commissioner for Patents, P.O. Box 1450, Alexandria, Virginia 22313-1450.
Under the Paperwork Reduction Act of 1995, no persons are required to respond to a collection of information unless it displays a valid OMB control number.

05/01/2009 HVUONG2 00000001 29324044
01 FC:2302 430.00 OP

PAGE 1/2 * RCVD AT 4/30/2009 11:36:20 AM [Eastern Daylight Time] * SVR:USPTO-EFXRF-5/4 * DNIS:2732885 * CSID:7637468125 * DURATION (mm-ss):01-36

UNITED STATES PATENT AND TRADEMARK OFFICE

UNITED STATES DEPARTMENT OF COMMERCE
United States Patent and Trademark Office
Address: COMMISSIONER FOR PATENTS
P.O. Box 1450
Alexandria, Virginia 22313-1450
www.uspto.gov

APPLICATION NO.	ISSUE DATE	PATENT NO.	ATTORNEY DOCKET NO.	CONFIRMATION NO.
29/324,044	06/02/2009	D593459	DEW-2933USK	5818

69638 7590 05/13/2009
KAMRATH & ASSOCIATES P.A.
4825 OLSON MEMORIAL HIGHWAY
SUITE 245
GOLDEN VALLEY, MN 55422

ISSUE NOTIFICATION

The projected patent number and issue date are specified above.

Determination of Patent Term Extension or Adjustment under 35 U.S.C. 154 (b)

Design patents have a term measured from the issue date of the patent and the term remains the same length regardless of the time that the application for the design patent was pending. Since the above-identified application is an application for a design patent, the patent is not eligible for Patent Term Extension or Adjustment under 35 U.S.C. 154(b).

Any questions regarding the Patent Term Extension or Adjustment determination should be directed to the Office of Patent Legal Administration at (571)-272-7702. Questions relating to issue and publication fee payments should be directed to the Customer Service Center of the Office of Patent Publication at (571)-272-4200.

APPLICANT(s) (Please see PAIR WEB site http://pair.uspto.gov for additional applicants):

Gordon Liao, Yung Kang City, TAIWAN;