**IN THE UNITED STATES DISTRICT COURT**
**FOR THE DISTRICT OF MASSACHUSETTS**

| | |
|---|---|
| BABY JOGGER, LLC,<br><br>Plaintiff and Counterclaim Defendant,<br><br>v.<br><br>MONAHAN PRODUCTS, LLC d/b/a UPPABABY,<br><br>Defendant and Counterclaim Plaintiff. | Civil Action No. 1:24-cv-11582<br><br>**JURY TRIAL DEMANDED** |

**UPPABABY'S ANSWER TO FIRST**
**AMENDED COMPLAINT AND COUNTERCLAIMS**

Defendant Monahan Products, LLC d/b/a UPPAbaby ("UPPAbaby") makes this Answer and Counterclaims in response to Plaintiff Baby Jogger, LLC's ("Baby Jogger") First Amended Complaint as follows:

## OVERVIEW

1. UPPAbaby denies the allegations in paragraph 1 or is without information sufficient to form a belief as to the truth of the allegations in paragraph 1 and therefore denies the same.

## NATURE OF THE ACTION

2. UPPAbaby admits that Baby Jogger's complaint alleges patent infringement under the U.S. patent laws. UPPAbaby denies any remaining allegations in paragraph 2.

3. UPPAbaby denies the allegations in paragraph 3.

4. UPPAbaby denies the allegations in paragraph 4.

## PARTIES

5. UPPAbaby is without information sufficient to form a belief as to the truth of the allegations in paragraph 5 and therefore denies the same.

6. UPPAbaby admits that Monahan Products, LLC d/b/a UPPAbaby is a domestic limited liability company in Massachusetts with an address of 276 Weymouth Street, Rockland, MA 02370. UPPAbaby denies any remaining allegations in paragraph 6.

## JURISDICTION AND VENUE

7. UPPAbaby admits that Baby Jogger's complaint alleges patent infringement under the U.S. patent laws. The remainder of paragraph 7 contains a statement of law to which no response is required. To the extent a response is required, UPPAbaby denies any remaining allegations in paragraph 7.

8. UPPAbaby admits to the allegations in paragraph 8.

9. UPPAbaby admits that the Court has personal jurisdiction over it. UPPAbaby denies the remaining allegations in paragraph 9.

10. UPPAbaby admits that venue is proper in this judicial district. UPPAbaby denies any remaining allegations in paragraph 10.

## BACKGROUND

### The Asserted Patents

#### *A. U.S. Patent No. 8,955,869*

11. UPPAbaby admits that a copy of U.S. Patent No. 8,955,869 bearing the title "Seat Attachment for a Stroller" was attached to the complaint as Exhibit A. UPPAbaby admits that an issue date of Feb. 17, 2015 is printed on the face of the patent. UPPAbaby denies any remaining allegations in paragraph 11.

12. UPPAbaby admits that the words and numbers "Appl. No.: 14/261,558" "Filed: Apr. 25, 2014" and "Provisional application No. 61/119,920, filed on Dec. 4, 2008" appear on the face of the '869 Patent. UPPAbaby denies that the '869 Patent is entitled to the Dec. 4, 2008



EVENFLO ET AL. EX1063

priority date. UPPAbaby is without information sufficient to form a belief as to the truth of any remaining allegations in paragraph 12 and therefore denies the same.

13. UPPAbaby is without information sufficient to form a belief as to the truth of the allegations in paragraph 13 and therefore denies the same.

14. UPPAbaby is without information sufficient to form a belief as to the truth of the allegations in paragraph 14 and therefore denies the same.

15. UPPAbaby is without information sufficient to form a belief as to the truth of the allegations in paragraph 15 and therefore denies the same.

16. UPPAbaby admits that claim 1 appears in the '869 Patent. UPPAbaby denies any remaining allegations in paragraph 16.

***B. U.S. Patent No. 9,403,550***

17. UPPAbaby admits that a copy of U.S. Patent No. 9,403,550 bearing the title "Seat Attachment for a Stroller" was attached to the complaint as Exhibit B. UPPAbaby admits that an issue date of Aug. 2, 2016 is printed on the face of the patent. UPPAbaby denies any remaining allegations in paragraph 17.

18. UPPAbaby admits that the words and numbers "Appl. No.: 14/597,420" "Filed: Jan. 15, 2015" and "Provisional application No. 61/119,920, filed on Dec. 4, 2008" appear on the face of the '550 Patent. UPPAbaby denies that the '550 Patent is entitled to the Dec. 4, 2008 priority date. UPPAbaby is without information sufficient to form a belief as to the truth of any remaining allegations in paragraph 18 and therefore denies the same.

19. UPPAbaby is without information sufficient to form a belief as to the truth of the allegations in paragraph 19 and therefore denies the same.



EVENFLO ET AL. EX1063

20. UPPAbaby is without information sufficient to form a belief as to the truth of the allegations in paragraph 20 and therefore denies the same.

21. UPPAbaby is without information sufficient to form a belief as to the truth of the allegations in paragraph 21 and therefore denies the same.

22. UPPAbaby admits that claim 1 appears in the '550 Patent. UPPAbaby denies any remaining allegations in paragraph 22.

***C. U.S. Patent No. 11,192,568***

23. UPPAbaby admits that a copy of U.S. Patent No. 11,192,568 bearing the title "Removable Seat Attachment for a Stroller" was attached to the complaint as Exhibit C. UPPAbaby admits that an issue date of Dec. 7, 2021 is printed on the face of the patent. UPPAbaby denies any remaining allegations in paragraph 23.

24. UPPAbaby admits that the words and numbers "Appl. No.: 16/832,429" "Filed: Mar. 27, 2020" "provisional application No. 61/119,920, filed on Dec. 4, 2008" and "Provisional application No. 62/311,224, filed on Mar. 21, 2016" appear on the face of the '568 Patent. UPPAbaby denies that the '568 Patent is entitled to the Dec. 4, 2008 priority date. UPPAbaby denies that the '568 Patent is entitled to the Mar. 21, 2016 priority date. UPPAbaby is without information sufficient to form a belief as to the truth of any remaining allegations in paragraph 24 and therefore denies the same.

25. UPPAbaby is without information sufficient to form a belief as to the truth of the allegations in paragraph 25 and therefore denies the same.

26. UPPAbaby is without information sufficient to form a belief as to the truth of the allegations in paragraph 26 and therefore denies the same.

27. UPPAbaby is without information sufficient to form a belief as to the truth of the allegations in paragraph 27 and therefore denies the same.

28. UPPAbaby admits that claim 1 appears in the '568 Patent. UPPAbaby denies any remaining allegations in paragraph 28.

***D. U.S. Patent No. 11,505,231***

29. UPPAbaby admits that a copy of U.S. Patent No. 11,505,231 bearing the title "Removable Seat Attachment for a Stroller" was attached to the complaint as Exhibit D. UPPAbaby admits that an issue date of Nov. 22, 2022 is printed on the face of the patent. UPPAbaby denies any remaining allegations in paragraph 29.

30. UPPAbaby admits that the words and numbers "Appl. No.: 17/877,323" "Filed: Jul. 29, 2022" "provisional application No. 61/119,920, filed on Dec. 4, 2008" and "Provisional application No. 62/311,224, filed on Mar. 21, 2016" appear on the face of the '231 Patent. UPPAbaby denies that the '231 Patent is entitled to the Dec. 4, 2008 priority date. UPPAbaby denies that the '231 Patent is entitled to the Mar. 21, 2016 priority date. UPPAbaby is without information sufficient to form a belief as to the truth of any remaining allegations in paragraph 30 and therefore denies the same.

31. UPPAbaby is without information sufficient to form a belief as to the truth of the allegations in paragraph 31 and therefore denies the same.

32. UPPAbaby is without information sufficient to form a belief as to the truth of the allegations in paragraph 32 and therefore denies the same.

33. UPPAbaby is without information sufficient to form a belief as to the truth of the allegations in paragraph 33 and therefore denies the same.



EVENFLO ET AL. EX1063

34. UPPAbaby admits that claim 1 appears in the '231 Patent. UPPAbaby denies any remaining allegations in paragraph 34.

***E. U.S. Patent No. 11,878,729***

35. UPPAbaby admits that a copy of U.S. Patent No. 11,878,729 bearing the title "Removable Seat Attachments for Strollers" was attached to the complaint as Exhibit E. UPPAbaby admits that an issue date of Jan. 23, 2024 is printed on the face of the patent. UPPAbaby denies any remaining allegations in paragraph 35.

36. UPPAbaby admits that the words and numbers "Appl. No.: 18/051,053" "Filed: Oct. 31, 2022" "provisional application No. 61/119,920, filed on Dec. 4, 2008" and "Provisional application No. 62/311,224, filed on Mar. 21, 2016" appear on the face of the '729 Patent. UPPAbaby denies that the '729 Patent is entitled to the Dec. 4, 2008 priority date. UPPAbaby denies that the '729 Patent is entitled to the Mar. 21, 2016 priority date. UPPAbaby is without information sufficient to form a belief as to the truth of any remaining allegations in paragraph 36 and therefore denies the same.

37. UPPAbaby is without information sufficient to form a belief as to the truth of the allegations in paragraph 37 and therefore denies the same.

38. UPPAbaby is without information sufficient to form a belief as to the truth of the allegations in paragraph 38 and therefore denies the same.

39. UPPAbaby is without information sufficient to form a belief as to the truth of the allegations in paragraph 39 and therefore denies the same.

40. UPPAbaby admits that claim 1 appears in the '729 Patent. UPPAbaby denies any remaining allegations in paragraph 40.

**Ownership of the Asserted Patents**



EVENFLO ET AL. EX1063

As to the complaint headings, no response is required. To the extent a response is required, UPPAbaby denies any allegation contained within the headings.

41. UPPAbaby admits that the public record contains a provisional application No. 61/119,920 "Attachment for a Stroller" bearing an inventor name of "Mark Zehfuss" and filing date of "12/04/2008." UPPAbaby denies any remaining allegations in paragraph 41.

42. UPPAbaby admits that the words and numbers "Appl. No.: 12/631,375" "Filed Dec. 4, 2009" "Inventor: Mark Zehfuss" "Provisional application No. 61/119,920, filed on Dec. 4, 2008" and "Seat Attachment for a Stroller" appear in the public record. UPPAbaby denies that the '375 Application is entitled to the Dec. 4, 2008 priority date. UPPAbaby is without information sufficient to form a belief as to the truth of any remaining allegations in paragraph 42 and therefore denies the same.

43. UPPAbaby admits that the document filed at ECF No. 28-1 contains the quoted language. As to any remaining allegations, UPPAbaby is without information sufficient to form a belief as to the truth of the allegations in paragraph 43 and therefore denies the same.

44. UPPAbaby admits that a copy of a "Membership Interest and Asset Purchase Agreement" was attached to the complaint as Exhibit F. As to any remaining allegations, UPPAbaby is without information sufficient to form a belief as to the truth of the allegations in paragraph 44 and therefore denies the same.

45. UPPAbaby admits that Exhibit F contains the quoted language. As to any remaining allegations, UPPAbaby is without information sufficient to form a belief as to the truth of the allegations in paragraph 45 and therefore denies the same.



EVENFLO ET AL. EX1063

46. UPPAbaby admits that Exhibit F contains the quoted language. As to any remaining allegations, UPPAbaby is without information sufficient to form a belief as to the truth of the allegations in paragraph 46 and therefore denies the same.

47. UPPAbaby admits that Exhibit F contains the quoted language. As to any remaining allegations, UPPAbaby is without information sufficient to form a belief as to the truth of the allegations in paragraph 47 and therefore denies the same.

48. UPPAbaby is without information sufficient to form a belief as to the truth of the allegations in paragraph 48 and therefore denies the same.

49. UPPAbaby is without information sufficient to form a belief as to the truth of the allegations in paragraph 49 and therefore denies the same.

50. UPPAbaby admits that Exhibit F contains the quoted language. As to any remaining allegations, UPPAbaby is without information sufficient to form a belief as to the truth of the allegations in paragraph 50 and therefore denies the same.

51. UPPAbaby admits that the document filed at ECF No. 28-2 contains the quoted language. As to any remaining allegations, UPPAbaby is without information sufficient to form a belief as to the truth of the allegations in paragraph 51 and therefore denies the same.

52. UPPAbaby is without information sufficient to form a belief as to the truth of the allegations in paragraph 52 and therefore denies the same.

53. UPPAbaby admits that the public record contains a provisional application No. 62/311,224 "Removable Seat Attachment for a Stroller" bearing a filing date of "03/21/2016." UPPAbaby denies any remaining allegations in paragraph 53.

54. UPPAbaby admits that the words and numbers "provisional application No. 61/119,920, filed on Dec. 4, 2008" and/or "Provisional application No. 62/311,224, filed on Mar.



EVENFLO ET AL. EX1063

21, 2016" appear on the face of some of the Asserted Patents. UPPAbaby denies that any of the Asserted Patents are entitled to the Dec. 4, 2008 priority date. UPPAbaby denies that any of the Asserted Patents are entitled to the Mar. 21, 2016 priority date. UPPAbaby denies that Baby Jogger owns all right, title and interest to the Asserted Patents. UPPAbaby is without information sufficient to form a belief as to the truth of any remaining allegations in paragraph 54 and therefore denies the same.

**UPPAbaby's Products**

As to the complaint headings, no response is required. To the extent a response is required, UPPAbaby denies any allegation contained within the headings.

55. UPPAbaby admits that it sells products called Vista and RumbleSeat. UPPAbaby denies the remaining allegations in paragraph 55.

56. UPPAbaby admits that it sells products called Vista and RumbleSeat. UPPAbaby denies the remaining allegations in paragraph 56.

**UPPAbaby's Knowledge**

As to the complaint headings, no response is required. To the extent a response is required, UPPAbaby denies any allegation contained within the headings.

57. UPPAbaby admits that the public record contains a provisional application No. 61/119,920 "Attachment for a Stroller" bearing a filing date of "12/04/2008." UPPAbaby is without information sufficient to form a belief as to the truth of the remaining allegations in paragraph 57 and therefore denies the same.

58. UPPAbaby is without information sufficient to form a belief as to the truth of the allegations in paragraph 58 and therefore denies the same.



EVENFLO ET AL. EX1063

59. UPPAbaby is without information sufficient to form a belief as to the truth of the allegations in paragraph 59 and therefore denies the same.

60. UPPAbaby is without information sufficient to form a belief as to the truth of the allegations in paragraph 60 and therefore denies the same.

61. UPPAbaby is without information sufficient to form a belief as to the truth of the allegations in paragraph 61 and therefore denies the same.

62. UPPAbaby admits that it sold a version of its RumbleSeat in 2009. UPPAbaby denies the remaining allegations in paragraph 62.

63. UPPAbaby admits that it sold a version of its RumbleSeat in 2015. UPPAbaby denies the remaining allegations in paragraph 63.

64. UPPAbaby admits that it received a letter dated December 4, 2015 from Newell Rubbermaid Inc. enclosing U.S. Patent No. 8,955,869. UPPAbaby denies the remaining allegations in paragraph 64.

65. UPPAbaby admits that it received a chart on or about December 18, 2015 from Newell Rubbermaid Inc. UPPAbaby denies the remaining allegations in paragraph 65.

66. UPPAbaby admits that it received a letter dated December 4, 2015 from Newell Rubbermaid Inc. enclosing U.S. Patent No. 8,955,869. UPPAbaby denies the remaining allegations in paragraph 66.

67. UPPAbaby is without information sufficient to form a belief as to the truth of the allegations in paragraph 67 and therefore denies the same.

68. UPPAbaby denies the allegations in paragraph 68.

69. UPPAbaby admits that the original complaint in this action was filed on June 18, 2024 and served on June 24, 2024. UPPAbaby denies the remaining allegations in paragraph 69.



EVENFLO ET AL. EX1063

70. UPPAbaby denies the allegations in paragraph 70.

**COUNT ONE**

**(the '869 Patent)**

As to the complaint headings, no response is required. To the extent a response is required, UPPAbaby denies any allegation contained within the headings.

71. UPPAbaby incorporates by reference, as if fully set forth herein, its responses to paragraphs 1-70.

72. UPPAbaby denies the allegations in paragraph 72.

73. UPPAbaby denies the allegations in paragraph 73.

74. UPPAbaby denies the allegations in paragraph 74.

75. UPPAbaby denies the allegations in paragraph 75.

76. UPPAbaby denies the allegations in paragraph 76.

77. UPPAbaby denies the allegations in paragraph 77.

78. UPPAbaby denies the allegations in paragraph 78.

79. UPPAbaby denies the allegations in paragraph 79.

80. UPPAbaby denies the allegations in paragraph 80.

81. UPPAbaby admits that it received a letter dated December 4, 2015 from Newell Rubbermaid Inc. enclosing U.S. Patent No. 8,955,869. UPPAbaby denies the remaining allegations in paragraph 81.

82. UPPAbaby admits that the original complaint in this action was filed on June 18, 2024 and served on June 24, 2024. UPPAbaby denies the remaining allegations in paragraph 82.

83. UPPAbaby denies the allegations in paragraph 83.

84. UPPAbaby denies the allegations in paragraph 84.



EVENFLO ET AL. EX1063

85. UPPAbaby denies the allegations in paragraph 85.

**COUNT TWO**

**(the '550 Patent)**

As to the complaint headings, no response is required. To the extent a response is required, UPPAbaby denies any allegation contained within the headings.

86. UPPAbaby incorporates by reference, as if fully set forth herein, its responses to paragraphs 1-85.

87. UPPAbaby denies the allegations in paragraph 87.

88. UPPAbaby denies the allegations in paragraph 88.

89. UPPAbaby denies the allegations in paragraph 89.

90. UPPAbaby denies the allegations in paragraph 90.

91. UPPAbaby denies the allegations in paragraph 91.

92. UPPAbaby denies the allegations in paragraph 92.

93. UPPAbaby denies the allegations in paragraph 93.

94. UPPAbaby denies the allegations in paragraph 94.

95. UPPAbaby denies the allegations in paragraph 95.

96. UPPAbaby denies the allegations in paragraph 96.

97. UPPAbaby denies the allegations in paragraph 97.

98. UPPAbaby denies the allegations in paragraph 98.

99. UPPAbaby denies the allegations in paragraph 99.

100. UPPAbaby denies the allegations in paragraph 100.



EVENFLO ET AL. EX1063

101. UPPAbaby admits that it received a letter dated December 4, 2015 from Newell Rubbermaid Inc. enclosing U.S. Patent No. 8,955,869. UPPAbaby denies the remaining allegations in paragraph 101.

102. UPPAbaby admits that the original complaint in this action was filed on June 18, 2024 and served on June 24, 2024. UPPAbaby denies the remaining allegations in paragraph 102.

103. UPPAbaby denies the allegations in paragraph 103.

104. UPPAbaby denies the allegations in paragraph 104.

105. UPPAbaby denies the allegations in paragraph 105.

**COUNT THREE**

**(the '550 Patent)**

As to the complaint headings, no response is required. To the extent a response is required, UPPAbaby denies any allegation contained within the headings.

106. UPPAbaby incorporates by reference, as if fully set forth herein, its responses to paragraphs 1-105.

107. UPPAbaby admits that it received a letter dated December 4, 2015 from Newell Rubbermaid Inc. enclosing U.S. Patent No. 8,955,869. UPPAbaby denies the remaining allegations in paragraph 107.

108. UPPAbaby admits that the original complaint in this action was filed on June 18, 2024 and served on June 24, 2024. UPPAbaby denies the remaining allegations in paragraph 108.

109. UPPAbaby denies the allegations in paragraph 109.

110. UPPAbaby denies the allegations in paragraph 110.

111. UPPAbaby denies the allegations in paragraph 111.

112. UPPAbaby denies the allegations in paragraph 112.



EVENFLO ET AL. EX1063

113. UPPAbaby denies the allegations in paragraph 113.

114. UPPAbaby is without information sufficient to form a belief as to the truth of the allegations in paragraph 114 and therefore denies the same.

115. UPPAbaby denies the allegations in paragraph 115.

**COUNT FOUR**

**(the '550 Patent)**

As to the complaint headings, no response is required. To the extent a response is required, UPPAbaby denies any allegation contained within the headings.

116. UPPAbaby incorporates by reference, as if fully set forth herein, its responses to paragraphs 1-115.

117. UPPAbaby admits that it received a letter dated December 4, 2015 from Newell Rubbermaid Inc. enclosing U.S. Patent No. 8,955,869. UPPAbaby denies the remaining allegations in paragraph 117.

118. UPPAbaby admits that the original complaint in this action was filed on June 18, 2024 and served on June 24, 2024. UPPAbaby denies the remaining allegations in paragraph 118.

119. UPPAbaby denies the allegations in paragraph 119.

120. UPPAbaby is without information sufficient to form a belief as to the truth of the allegations in paragraph 120 and therefore denies the same.

121. UPPAbaby denies the allegations in paragraph 121.

122. UPPAbaby denies the allegations in paragraph 122.

**COUNT FIVE**

**(the '568 Patent)**



EVENFLO ET AL. EX1063

As to the complaint headings, no response is required. To the extent a response is required, UPPAbaby denies any allegation contained within the headings.

123. UPPAbaby incorporates by reference, as if fully set forth herein, its responses to paragraphs 1-122.

124. UPPAbaby denies the allegations in paragraph 124.

125. UPPAbaby denies the allegations in paragraph 125.

126. UPPAbaby denies the allegations in paragraph 126.

127. UPPAbaby denies the allegations in paragraph 127.

128. UPPAbaby denies the allegations in paragraph 128.

129. UPPAbaby denies the allegations in paragraph 129.

130. UPPAbaby denies the allegations in paragraph 130.

131. UPPAbaby denies the allegations in paragraph 131.

132. UPPAbaby denies the allegations in paragraph 132.

133. UPPAbaby denies the allegations in paragraph 133.

134. UPPAbaby denies the allegations in paragraph 134.

135. UPPAbaby denies the allegations in paragraph 135.

136. UPPAbaby denies the allegations in paragraph 136.

137. UPPAbaby denies the allegations in paragraph 118.

138. UPPAbaby admits that it received a letter dated December 4, 2015 from Newell Rubbermaid Inc. enclosing U.S. Patent No. 8,955,869. UPPAbaby denies the remaining allegations in paragraph 138.

139. UPPAbaby admits that the original complaint in this action was filed on June 18, 2024 and served on June 24, 2024. UPPAbaby denies the remaining allegations in paragraph 139.



EVENFLO ET AL. EX1063

140. UPPAbaby denies the allegations in paragraph 140.

141. UPPAbaby denies the allegations in paragraph 141.

142. UPPAbaby denies the allegations in paragraph 142.

**COUNT SIX**

**(the '568 Patent)**

As to the complaint headings, no response is required. To the extent a response is required, UPPAbaby denies any allegation contained within the headings.

143. UPPAbaby incorporates by reference, as if fully set forth herein, its responses to paragraphs 1-142.

144. UPPAbaby admits that it received a letter dated December 4, 2015 from Newell Rubbermaid Inc. enclosing U.S. Patent No. 8,955,869. UPPAbaby denies the remaining allegations in paragraph 144.

145. UPPAbaby admits that the original complaint in this action was filed on June 18, 2024 and served on June 24, 2024. UPPAbaby denies the remaining allegations in paragraph 145.

146. UPPAbaby denies the allegations in paragraph 146.

147. UPPAbaby denies the allegations in paragraph 147.

148. UPPAbaby denies the allegations in paragraph 148.

149. UPPAbaby denies the allegations in paragraph 149.

150. UPPAbaby denies the allegations in paragraph 150.

151. UPPAbaby is without information sufficient to form a belief as to the truth of the allegations in paragraph 151 and therefore denies the same.

152. UPPAbaby denies the allegations in paragraph 152.

**COUNT SEVEN**



EVENFLO ET AL. EX1063

**(the '568 Patent)**

As to the complaint headings, no response is required. To the extent a response is required, UPPAbaby denies any allegation contained within the headings.

153. UPPAbaby incorporates by reference, as if fully set forth herein, its responses to paragraphs 1-152.

154. UPPAbaby admits that it received a letter dated December 4, 2015 from Newell Rubbermaid Inc. enclosing U.S. Patent No. 8,955,869. UPPAbaby denies the remaining allegations in paragraph 154.

155. UPPAbaby admits that the original complaint in this action was filed on June 18, 2024 and served on June 24, 2024. UPPAbaby denies the remaining allegations in paragraph 155.

156. UPPAbaby denies the allegations in paragraph 156.

157. UPPAbaby is without information sufficient to form a belief as to the truth of the allegations in paragraph 157 and therefore denies the same.

158. UPPAbaby denies the allegations in paragraph 158.

159. UPPAbaby denies the allegations in paragraph 159.

**COUNT EIGHT**

**(the '231 Patent)**

As to the complaint headings, no response is required. To the extent a response is required, UPPAbaby denies any allegation contained within the headings.

160. UPPAbaby incorporates by reference, as if fully set forth herein, its responses to paragraphs 1-159.

161. UPPAbaby denies the allegations in paragraph 161.

162. UPPAbaby denies the allegations in paragraph 162.



EVENFLO ET AL. EX1063

163. UPPAbaby denies the allegations in paragraph 163.

164. UPPAbaby denies the allegations in paragraph 164.

165. UPPAbaby denies the allegations in paragraph 165.

166. UPPAbaby denies the allegations in paragraph 166.

167. UPPAbaby denies the allegations in paragraph 167.

168. UPPAbaby denies the allegations in paragraph 168.

169. UPPAbaby denies the allegations in paragraph 169.

170. UPPAbaby denies the allegations in paragraph 170.

171. UPPAbaby denies the allegations in paragraph 171.

172. UPPAbaby denies the allegations in paragraph 172.

173. UPPAbaby denies the allegations in paragraph 173.

174. UPPAbaby denies the allegations in paragraph 174.

175. UPPAbaby denies the allegations in paragraph 175.

176. UPPAbaby denies the allegations in paragraph 176.

177. UPPAbaby admits that it received a letter dated December 4, 2015 from Newell Rubbermaid Inc. enclosing U.S. Patent No. 8,955,869. UPPAbaby denies the remaining allegations in paragraph 177.

178. UPPAbaby admits that the original complaint in this action was filed on June 18, 2024 and served on June 24, 2024. UPPAbaby denies the remaining allegations in paragraph 178.

179. UPPAbaby denies the allegations in paragraph 179.

180. UPPAbaby denies the allegations in paragraph 180.

181. UPPAbaby denies the allegations in paragraph 181.

**COUNT NINE**



EVENFLO ET AL. EX1063

**(the '231 Patent)**

As to the complaint headings, no response is required. To the extent a response is required, UPPAbaby denies any allegation contained within the headings.

182. UPPAbaby incorporates by reference, as if fully set forth herein, its responses to paragraphs 1-181.

183. UPPAbaby admits that it received a letter dated December 4, 2015 from Newell Rubbermaid Inc. enclosing U.S. Patent No. 8,955,869. UPPAbaby denies the remaining allegations in paragraph 183.

184. UPPAbaby admits that the original complaint in this action was filed on June 18, 2024 and served on June 24, 2024. UPPAbaby denies the remaining allegations in paragraph 184.

185. UPPAbaby denies the allegations in paragraph 185.

186. UPPAbaby denies the allegations in paragraph 186.

187. UPPAbaby denies the allegations in paragraph 187.

188. UPPAbaby denies the allegations in paragraph 188.

189. UPPAbaby denies the allegations in paragraph 189.

190. UPPAbaby is without information sufficient to form a belief as to the truth of the allegations in paragraph 190 and therefore denies the same.

191. UPPAbaby denies the allegations in paragraph 191.

**COUNT TEN**

**(the '231 Patent)**

As to the complaint headings, no response is required. To the extent a response is required, UPPAbaby denies any allegation contained within the headings.



EVENFLO ET AL. EX1063

192. UPPAbaby incorporates by reference, as if fully set forth herein, its responses to paragraphs 1-191.

193. UPPAbaby admits that it received a letter dated December 4, 2015 from Newell Rubbermaid Inc. enclosing U.S. Patent No. 8,955,869. UPPAbaby denies the remaining allegations in paragraph 193.

194. UPPAbaby admits that the original complaint in this action was filed on June 18, 2024 and served on June 24, 2024. UPPAbaby denies the remaining allegations in paragraph 194.

195. UPPAbaby denies the allegations in paragraph 195.

196. UPPAbaby is without information sufficient to form a belief as to the truth of the allegations in paragraph 196 and therefore denies the same.

197. UPPAbaby denies the allegations in paragraph 197.

198. UPPAbaby denies the allegations in paragraph 198.

**COUNT ELEVEN**

**(the '729 Patent)**

As to the complaint headings, no response is required. To the extent a response is required, UPPAbaby denies any allegation contained within the headings.

199. UPPAbaby incorporates by reference, as if fully set forth herein, its responses to paragraphs 1-198.

200. UPPAbaby denies the allegations in paragraph 200.

201. UPPAbaby denies the allegations in paragraph 201.

202. UPPAbaby denies the allegations in paragraph 202.

203. UPPAbaby denies the allegations in paragraph 203.

204. UPPAbaby denies the allegations in paragraph 204.



EVENFLO ET AL. EX1063

205. UPPAbaby denies the allegations in paragraph 205.

206. UPPAbaby denies the allegations in paragraph 206.

207. UPPAbaby denies the allegations in paragraph 207.

208. UPPAbaby denies the allegations in paragraph 208.

209. UPPAbaby denies the allegations in paragraph 209.

210. UPPAbaby denies the allegations in paragraph 210.

211. UPPAbaby denies the allegations in paragraph 211.

212. UPPAbaby denies the allegations in paragraph 212.

213. UPPAbaby denies the allegations in paragraph 213.

214. UPPAbaby denies the allegations in paragraph 214.

215. UPPAbaby admits that it received a letter dated December 4, 2015 from Newell Rubbermaid Inc. enclosing U.S. Patent No. 8,955,869. UPPAbaby denies the remaining allegations in paragraph 215.

216. UPPAbaby admits that the original complaint in this action was filed on June 18, 2024 and served on June 24, 2024. UPPAbaby denies the remaining allegations in paragraph 216.

217. UPPAbaby denies the allegations in paragraph 217.

218. UPPAbaby denies the allegations in paragraph 218.

219. UPPAbaby denies the allegations in paragraph 219.

**COUNT TWELVE**

**(the '729 Patent)**

As to the complaint headings, no response is required. To the extent a response is required, UPPAbaby denies any allegation contained within the headings.



EVENFLO ET AL. EX1063

220. UPPAbaby incorporates by reference, as if fully set forth herein, its responses to paragraphs 1-220.

221. UPPAbaby admits that it received a letter dated December 4, 2015 from Newell Rubbermaid Inc. enclosing U.S. Patent No. 8,955,869. UPPAbaby denies the remaining allegations in paragraph 221.

222. UPPAbaby admits that the original complaint in this action was filed on June 18, 2024 and served on June 24, 2024. UPPAbaby denies the remaining allegations in paragraph 222.

223. UPPAbaby denies the allegations in paragraph 223.

224. UPPAbaby denies the allegations in paragraph 224.

225. UPPAbaby denies the allegations in paragraph 225.

226. UPPAbaby denies the allegations in paragraph 226.

227. UPPAbaby denies the allegations in paragraph 227.

228. UPPAbaby is without information sufficient to form a belief as to the truth of the allegations in paragraph 228 and therefore denies the same.

229. UPPAbaby denies the allegations in paragraph 229.

**COUNT THIRTEEN**

**(the '729 Patent)**

As to the complaint headings, no response is required. To the extent a response is required, UPPAbaby denies any allegation contained within the headings.

230. UPPAbaby incorporates by reference, as if fully set forth herein, its responses to paragraphs 1-229.

231. UPPAbaby admits that it received a letter dated December 4, 2015 from Newell Rubbermaid Inc. enclosing U.S. Patent No. 8,955,869. UPPAbaby denies the remaining allegations in paragraph 231.

232. UPPAbaby admits that the original complaint in this action was filed on June 18, 2024 and served on June 24, 2024. UPPAbaby denies the remaining allegations in paragraph 232.

233. UPPAbaby denies the allegations in paragraph 233.

234. UPPAbaby is without information sufficient to form a belief as to the truth of the allegations in paragraph 234 and therefore denies the same.

235. UPPAbaby denies the allegations in paragraph 235.

236. UPPAbaby denies the allegations in paragraph 236.

## JURY TRIAL DEMAND

As to the complaint headings, no response is required. To the extent a response is required, UPPAbaby denies any allegation contained within the headings.

## PRAYER FOR RELIEF

UPPAbaby denies that Baby Jogger is entitled to any of the relief requested.

## UPPABABY'S AFFIRMATIVE DEFENSES

Without assuming any burden other than that imposed by operation of law or admitting that it bears the burden of proof with respect to any of the following, UPPAbaby alleges as follows, and specifically reserves all rights to allege additional defenses, affirmative or otherwise, that become known through the course of discovery:

### FIRST AFFIRMATIVE DEFENSE
### Non-Infringement of the Asserted Patents

UPPAbaby does not infringe and has not infringed (not directly, contributorily, by inducement, or in any other way) literally or under the doctrine of equivalents any claim of the



EVENFLO ET AL. EX1063

Asserted Patents (U.S. Patent Nos. 8,955,869; 9,403,550; 11,192,568; 11,505,231; and 11,878,729).

**SECOND AFFIRMATIVE DEFENSE**
**Invalidity of the Asserted Patents**

The claims of the Asserted Patents are invalid for failure to satisfy one or more of the requirements of Title 35 of the United States Code including but not limited to §§ 101, 102, 103, 112, and 116.

**THIRD AFFIRMATIVE DEFENSE**
**Equitable Estoppel**

Baby Jogger's claims of infringement under the Asserted Patents are barred, in whole or in part, by the doctrine of equitable estoppel.

**FOURTH AFFIRMATIVE DEFENSE**
**Implied License**

Baby Jogger's claims of infringement under the Asserted Patents are barred, in whole or in part, by the doctrine of implied license.

**FIFTH AFFIRMATIVE DEFENSE**
**Prosecution History Estoppel**

Baby Jogger's claims of infringement under the Asserted Patents are barred, in whole or in part, pursuant to the doctrine of prosecution estoppel.

**SIXTH AFFIRMATIVE DEFENSE**
**Failure to State a Claim**

Baby Jogger's complaint fails to state a claim upon which relief can be granted, including, but not limited to, because Baby Jogger's complaint fails to meet the standard for pleading set by the Supreme Court in *Ashcroft v. Iqbal*, 129 S. Ct. 1937 (2009), and *Bell Athaltic Corp. v. Twombly*, 550 U.S. 544 (2007).

**SEVENTH AFFIRMATIVE DEFENSE**



EVENFLO ET AL. EX1063

**No Willful Infringement**

Baby Jogger's claims of willful infringement under the Asserted Patents are barred, in whole or in part, for absence of deliberate or intentional infringement.

**EIGHTH AFFIRMATIVE DEFENSE**
**Incorrect Inventorship**

The claims of the Asserted Patents are invalid for incorrect inventorship and cannot be corrected under Title 35 of the United States Code § 256.

**NINTH AFFIRMATIVE DEFENSE**
**Limitation on Damages**

Baby Jogger's purported damages, if any, are limited under Title 35 of the United States Code §§ 286, 287, and 288.

**TENTH AFFIRMATIVE DEFENSE**
**Lack of Standing and Failure to Join a Required Party**

Baby Jogger lacks standing under Fed. R. Civ. P. 12(b)(1) and/or 12(b)(6) and failed to join a required party under Fed. R. Civ. P. 12(b)(7) and/or 12(b)(6).

**UPPABABY'S COUNTERCLAIMS AND DEMAND FOR JURY TRIAL**

Monahan Products, LLC d/b/a UPPAbaby, by and through its attorneys, brings these Counterclaims against Defendant Baby Jogger, LLC for declaratory judgment of invalidity of the Asserted Patents (U.S. Patent Nos. 8,955,869; 9,403,550; 11,192,568; 11,505,231; and 11,878,729).

UPPAbaby alleges as follows:

**PARTIES**

1. UPPAbaby is a limited liability company organized and existing under the laws of the Commonwealth of Massachusetts, with a principal place of business at 276 Weymouth Street, Rockland, Massachusetts 02370.



EVENFLO ET AL. EX1063

2. On information and belief, Baby Jogger is a limited liability company organized and existing under the laws of the Commonwealth of Virginia, with a principal place of business at 6655 Peachtree Dunwoody Road, Atlanta, Georgia 30328.

## JURISDICTION AND VENUE

3. These counterclaims arise under the patent laws of the United States, Title 35, United States Code. The jurisdiction of this Court is proper under at least 35 U.S.C. § 271 et seq. and 28 U.S.C. §§ 1331, 1338, 1367, 2201, and 2202.

4. If venue is proper over the action filed by Baby Jogger, then venue over these counterclaims is also proper in this District pursuant to at least 28 U.S.C. §§ 1391 and 1400.

5. This Court has personal jurisdiction over Baby Jogger because Baby Jogger has voluntarily appeared and consented to this venue by filing its First Amended Complaint.

## BACKGROUND

6. Newell Rubbermaid Inc. (Baby Jogger's former owner) sent a letter to UPPAbaby on December 4, 2015 concerning the '869 Patent. Exhibit A ("the 12/04/2015 Letter").

7. Newell Rubbermaid and UPPAbaby had been in confidential business discussions prior to the 12/04/2015 Letter.

8. The confidential business discussions were unrelated to the '869 Patent.

9. The 12/04/2015 Letter was an attempt to disrupt UPPAbaby's business after the confidential business discussions were terminated.

10. UPPAbaby responded to Newell Rubbermaid on December 30, 2015. Exhibit B ("the 12/30/15 Letter").

11. UPPAbaby stated, "Newell Rubbermaid and UPPAbaby were in business discussions just prior to receiving your letter…Newell Rubbermaid appears to be engaging in



EVENFLO ET AL. EX1063

unfair business practices and attempting to disrupt UPPAbaby's business." Exhibit B ("the 12/30/15 Letter").

12. UPPAbaby further stated:

> Before you assert unfounded claims of infringement, Newell Rubbermaid should be aware of several facts. *First*, the patent Newell Rubbermaid acquired from Baby Jogger was filed on April 25, 2014, and claims priority to a continuation application filed on December 4, 2009, which is now abandoned, and a provisional application filed on December 4, 2008. *Second*, UPPAbaby's Vista stroller was first sold in 2006, at least two years before the earliest application filed by Baby Jogger. *Third*, UPPAbaby's Rumble Seat was publicly disclosed in 2008, including at the ABC Tradeshow in September, 2008, before the earliest application filed by Baby Jogger. *Fourth*, Baby Jogger and UPPAbaby were on friendly terms in 2008 and both attended the ABC Tradeshow in September, 2008, where Baby Jogger representatives saw UPPAbaby's Rumble Seat.

Exhibit B ("the 12/30/15 Letter").

13. UPPAbaby's Vista stroller was first sold in 2006, at least two years before the earliest application filed by Baby Jogger.

14. UPPAbaby's Rumble Seat was publicly disclosed in 2008, including at the ABC Tradeshow in September 2008, before the earliest application filed by Baby Jogger.

15. Baby Jogger and UPPAbaby were on friendly terms in 2008.

16. Baby Jogger and UPPAbaby both attended the ABC Tradeshow in September 2008.

17. Baby Jogger representatives saw UPPAbaby's Rumble Seat at the ABC Tradeshow in September 2008.

18. Newell Rubbermaid responded to UPPAbaby on March 15, 2016. Exhibit C ("the 03/15/2016 Letter").

19. The 03/15/2016 Letter did not request a response, and UPPAbaby did not send one.

20. There were no further communications between Newell Rubbermaid and UPPAbaby concerning the '869 Patent.

21. Newell Rubbermaid did not sue UPPAbaby for patent infringement.

22. Newell Rubbermaid took no action against UPPAbaby following the 03/15/2016 Letter.

23. Baby Jogger took no action against UPPAbaby following the 03/15/2016 Letter until filing the complaint in this action on June 18, 2024.

24. June 18, 2024 is over eight years after March 15, 2016.

25. In 2016, Newell Rubbermaid combined with Jarden Corporation to form Newell Brands Inc. (Baby Jogger's current owner).

26. UPPAbaby did not receive any follow up communications from Newell Brands or Baby Jogger concerning Newell Rubbermaid's prior allegations.

27. Newell Brands did not sue UPPAbaby for patent infringement.

28. Newell Brands took no action against UPPAbaby following the 03/15/2016 Letter.

29. UPPAbaby reasonably believed that Newell Brands and Baby Jogger did not intend to enforce the '869 Patent against UPPAbaby.

30. UPPAbaby relied on Newell Brands' and Baby Jogger's inaction following the 03/15/2016 Letter from Newell Rubbermaid.

31. UPPAbaby continued to manufacture, sell and offer to sell its Vista and RumbleSeat products after the 03/15/2016 Letter.

32. UPPAbaby continued to design and develop the Vista and RumbleSeat products after the 03/15/2016 Letter.

33. UPPAbaby would be materially prejudiced if Baby Jogger were permitted to proceed with its charge of infringement including but not limited to economic prejudice and defense prejudice.

34. Over sixteen (16) years have passed since the ABC Tradeshow in September 2008.



EVENFLO ET AL. EX1063

35. On information and belief, Baby Jogger's ownership has changed hands four times since September 2008.

36. On information and belief, Baby Jogger's former CEO and the purported inventor of the Asserted Patents, Mark Zehfuss, is no longer with Baby Jogger.

**EXEMPLARY PRIOR ART**

37. U.S. Design Patent No. D593,459 is attached as Exhibit D (hereinafter, "the '459 Patent").

38. The '459 Patent identifies Gordon Liao as the sole inventor and Unique Product & Design Co., Ltd. as assignee.

39. The '459 Patent is titled COMBINATION PUSHCHAIR FRAME and was filed on Sept. 5, 2008.

40. The filing date of the '459 Patent predates the earliest priority date claimed by the Asserted Patents.

**COUNT I**

**Declaratory Judgment of Invalidity of the '869 Patent**

41. UPPAbaby repeats and realleges each and every allegation in Paragraphs 1-40 of UPPAbaby's Counterclaims and Demand for Jury Trial, as if fully set forth herein.

42. The asserted claims of the '869 Patent are invalid under at least 35 U.S.C. §§ 102 and/or 103.

43. Independent claim 1 of the '869 Patent recites as follows:

> 1. A seat attachment for a stroller, comprising:
>
> a separate left attachment portion, wherein the left attachment portion comprises:
>
> a connector portion capable of removably connecting to a stroller frame adjacent a left front wheel of the stroller and a left seat support element removably connecting a seat in either a forward or backward position; and

a separate right attachment portion, wherein the right attachment portion comprises:

a connector portion capable of removably connecting to a stroller frame adjacent a right front wheel of the stroller and a right seat support element removably connecting the seat in either a forward or backward position between the left and right support elements.

44. For example, and without limitation, the '459 Patent anticipates or renders obvious claim 1 of the '869 Patent.

45. The '459 Patent discloses or renders obvious "A seat attachment for a stroller":

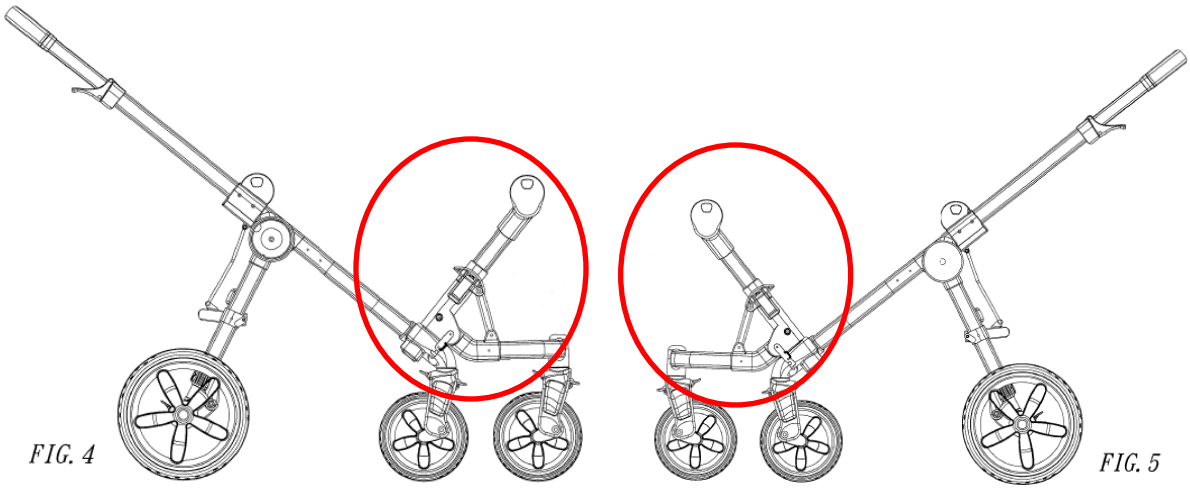


46. The '459 Patent discloses or renders obvious "a separate left attachment portion, wherein the left attachment portion comprises":

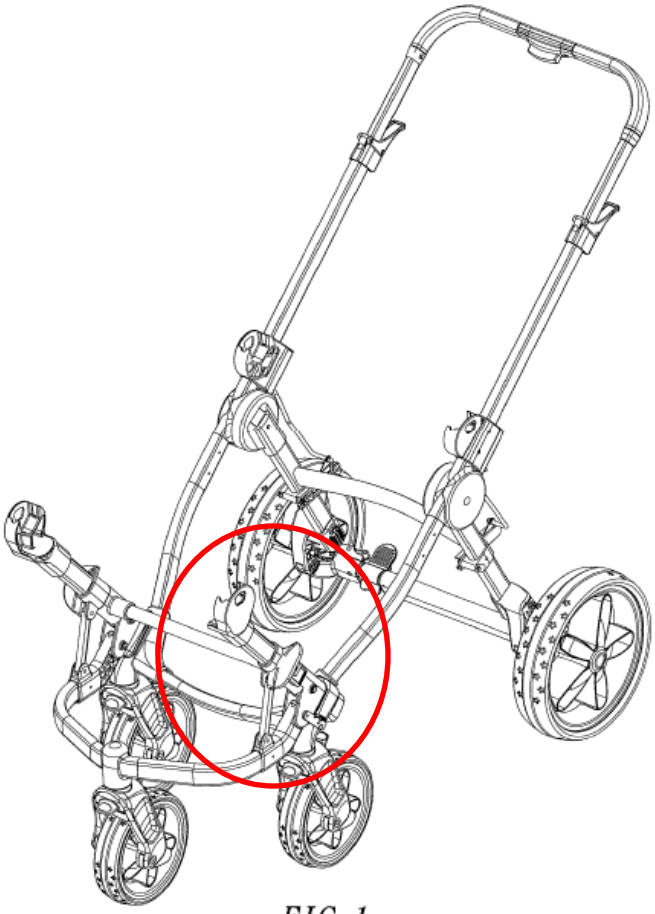

FIG. 1

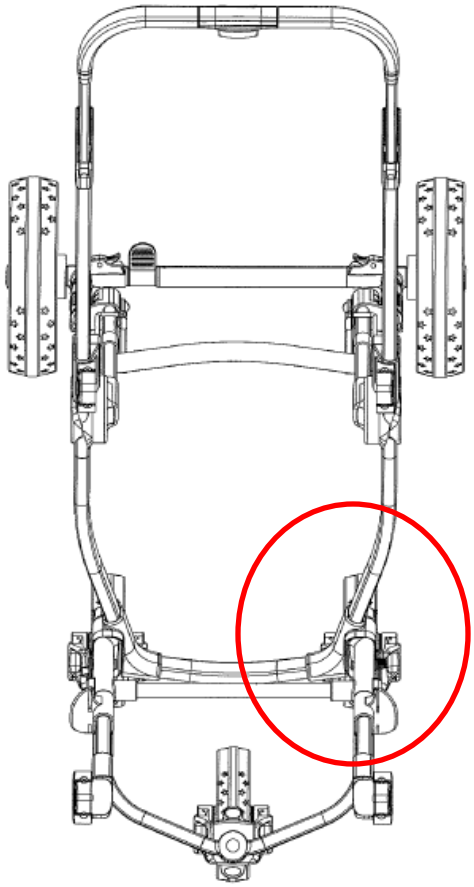

FIG. 6

47. The '459 Patent discloses or renders obvious "a connector portion capable of removably connecting to a stroller frame adjacent a left front wheel of the stroller and a left seat support element removably connecting a seat in either a forward or backward position; and":

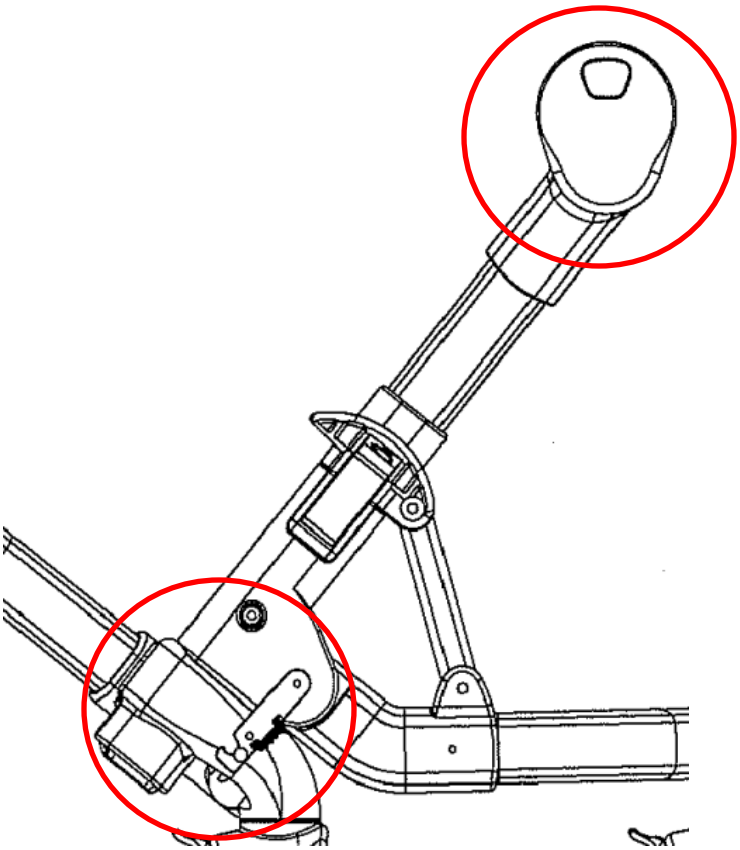

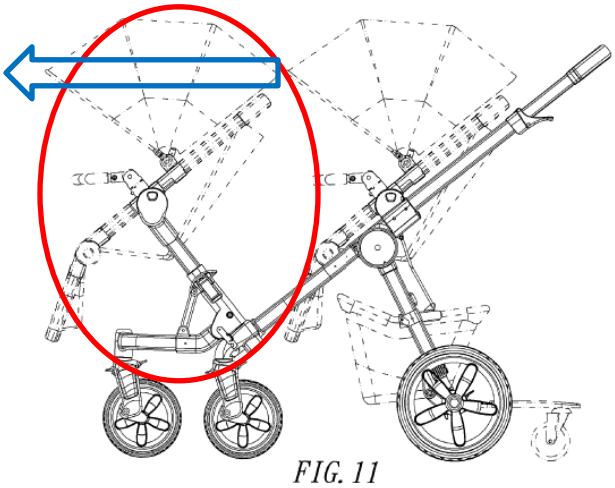

FIG. 11

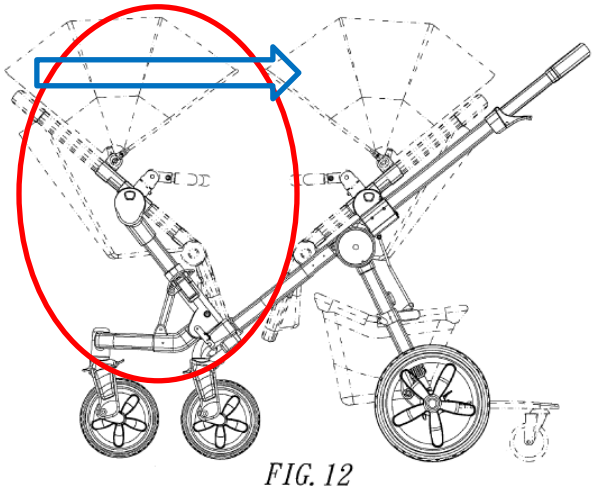

FIG. 12

48. The '459 Patent discloses or renders obvious "a separate right attachment portion, wherein the right attachment portion comprises":

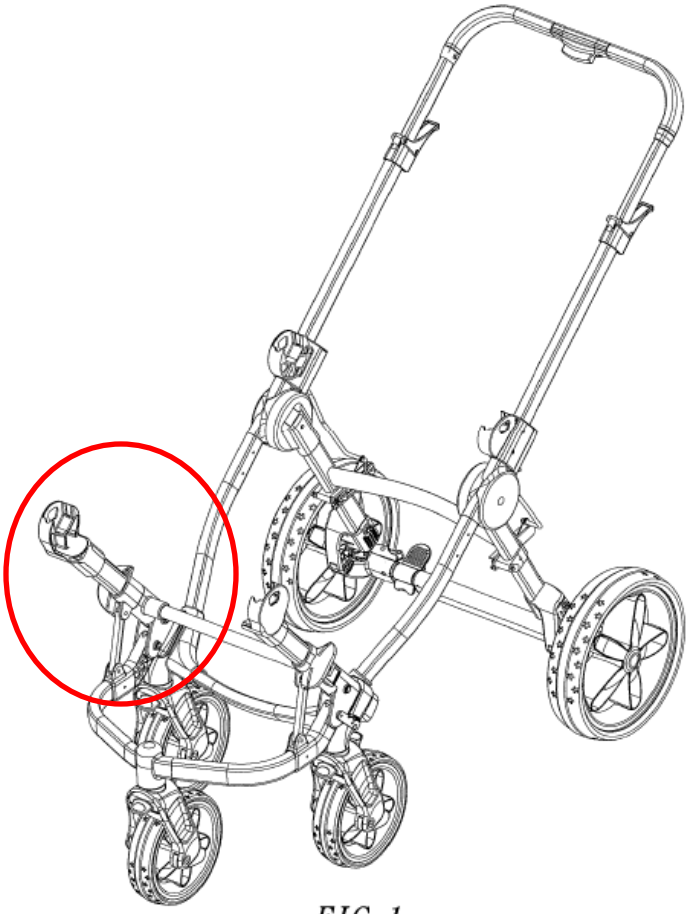

FIG. 1

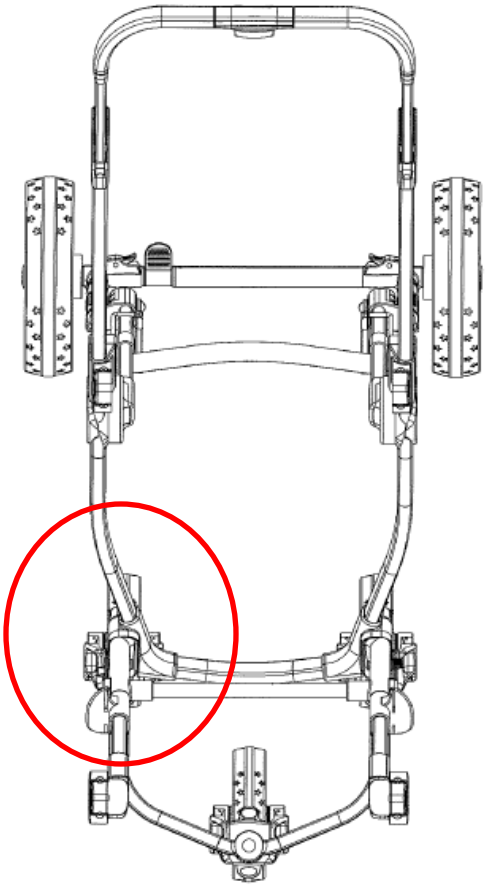

FIG. 6

49. The '459 Patent discloses or renders obvious "a connector portion capable of removably connecting to a stroller frame adjacent a right front wheel of the stroller and a right seat support element removably connecting the seat in either a forward or backward position between the left and right support elements":

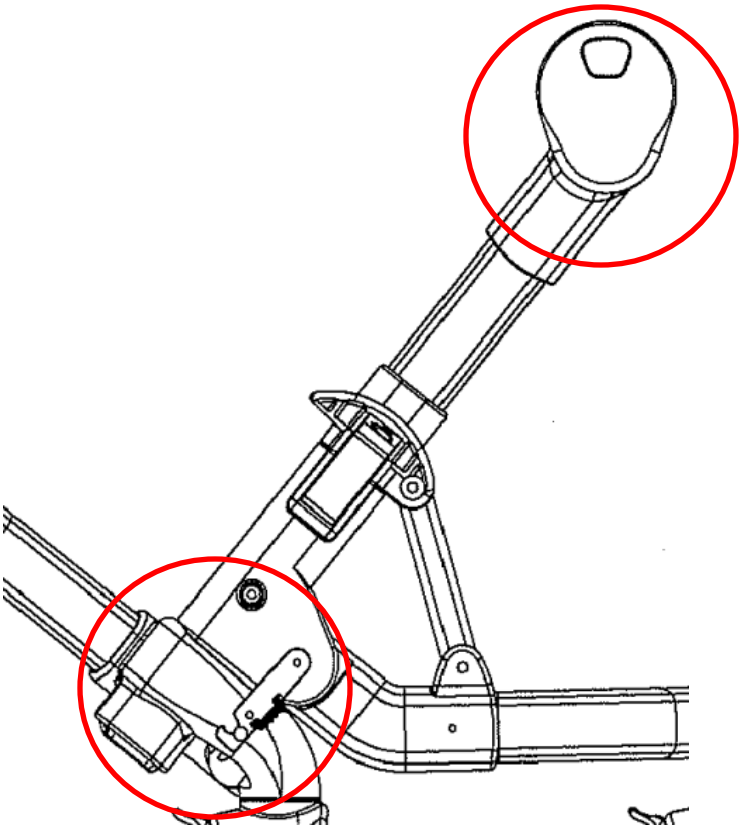

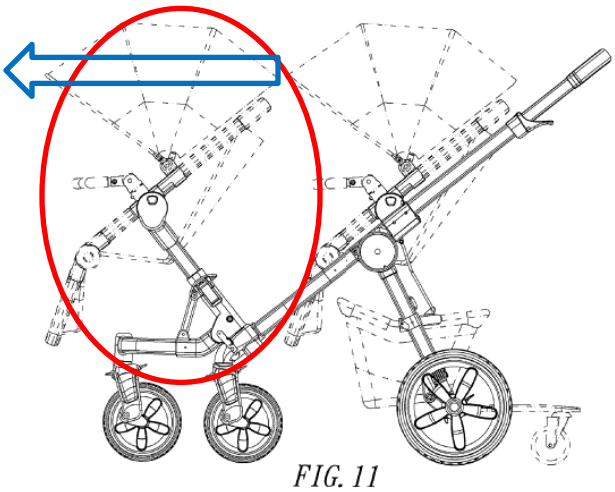

FIG. 11

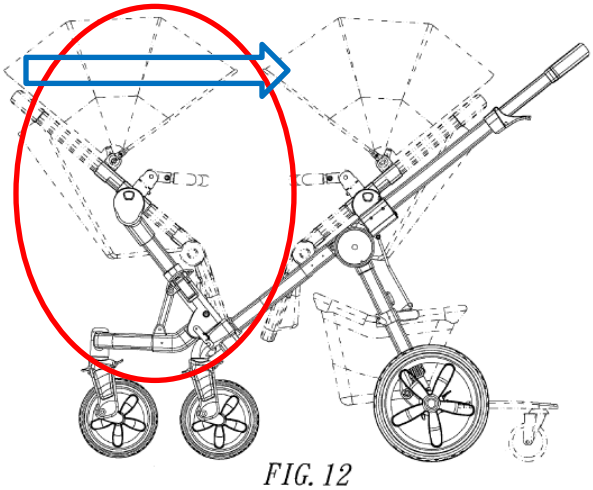

FIG. 12

50. As a result of Baby Jogger's actions and statements, including the filing of this action, an actual controversy now exists between UPPAbaby and Baby Jogger regarding the validity of the asserted claims of the '869 Patent.

51. UPPAbaby is entitled to a declaration that any and all asserted claims of the '869 Patent are invalid.

**COUNT II**

**Declaratory Judgment of Invalidity of the '550 Patent**

52. UPPAbaby repeats and realleges each and every allegation in Paragraphs 1-51 of UPPAbaby's Counterclaims and Demand for Jury Trial, as if fully set forth herein.

53. The asserted claims of the '550 Patent are invalid under at least 35 U.S.C. §§ 102 and/or 103.

54. Independent claim 1 of the '550 Patent recites as follows:

> 1. A stroller, comprising:
>
> a stroller frame;
>
> a plurality of wheels comprising a plurality of front wheels and a plurality of back wheels;
>
> a first seat coupled to the stroller frame at a first vertical position of the stroller frame closer to a handle of the stroller and configured to hold a first child in the stroller;
>
> a second seat attachment coupled to the stroller frame at a second vertical position substantially below the first vertical position and closer to the front wheels and comprising:
>
> a left seat support element, wherein the left seat support element comprises:
>
> a first connector portion releasably connected to the stroller frame closer to a left front wheel and a left seat connector releasably connecting a second seat in either a forward or backward position; and
>
> a right seat support element, wherein the right seat support element comprises:
>
> a second connector portion releasably connected to the stroller frame closer to a right front wheel and a right seat connector releasably connecting the second seat in either a forward or backward position between the left and right seat connectors; and

the second seat releasably connected to the left seat connector and the right seat connector and configured to hold a second child in the stroller while the first seat holds the first child.

55. For example, and without limitation, the '459 Patent anticipates or renders obvious claim 1 of the '550 Patent.

56. The '459 Patent discloses or renders obvious "A stroller":

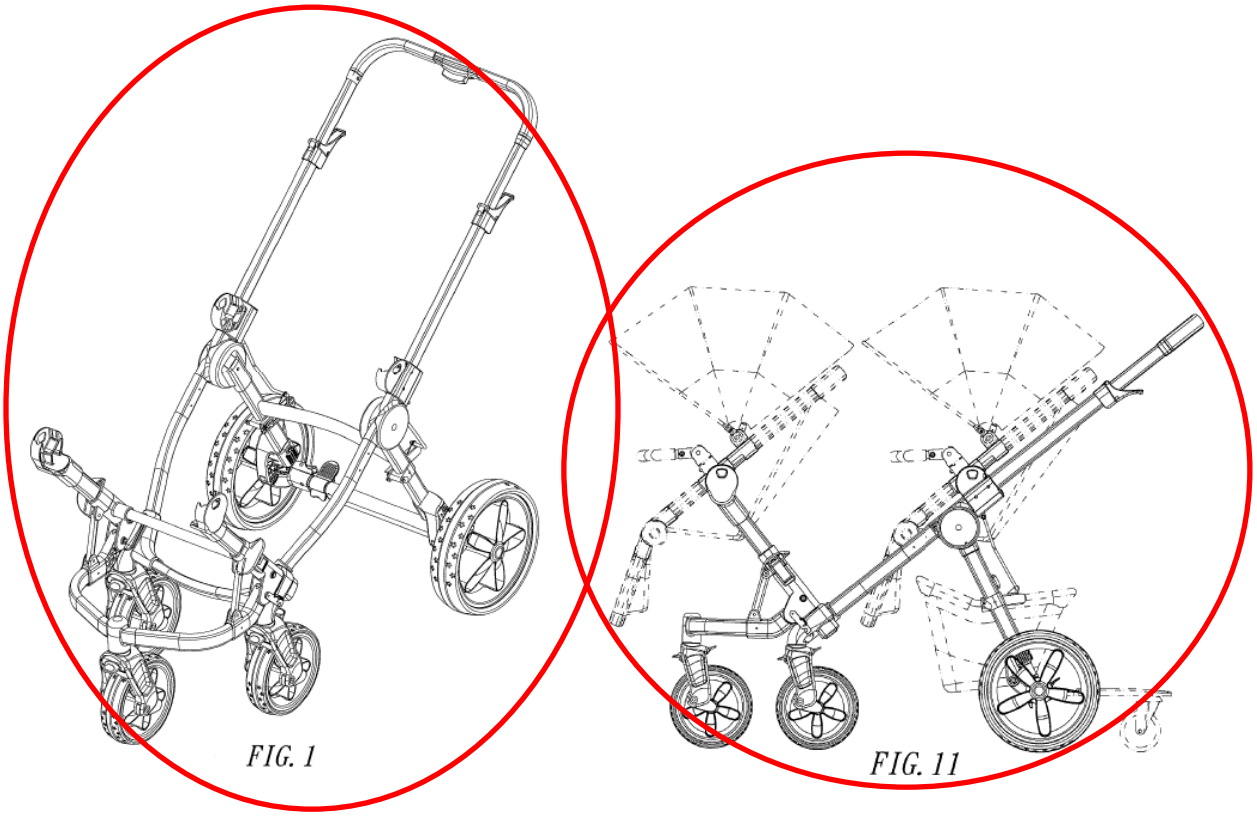


57. The '459 discloses or renders obvious "a stroller frame":

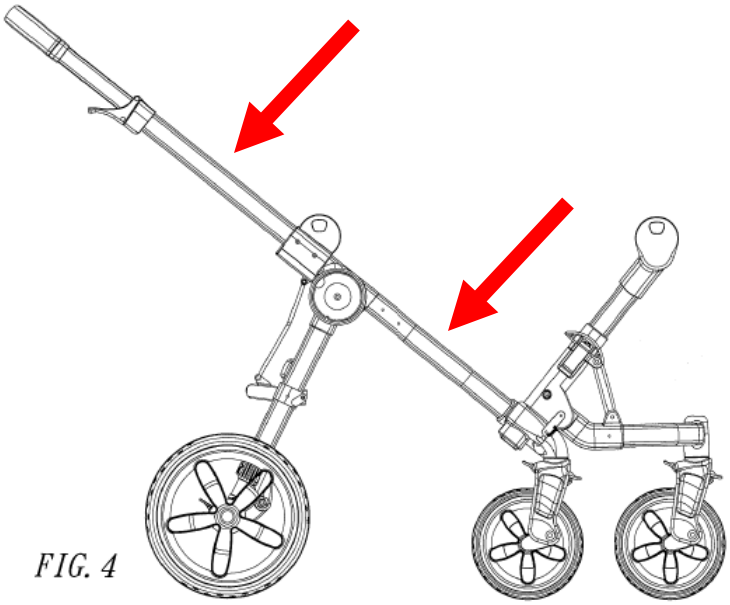

FIG. 4

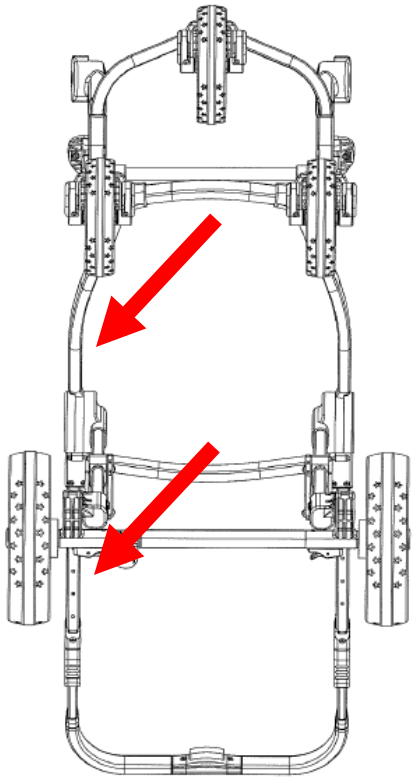

FIG. 7

58. The '459 Patent discloses or renders obvious "a plurality of wheels comprising a plurality of front wheels and a plurality of back wheels":

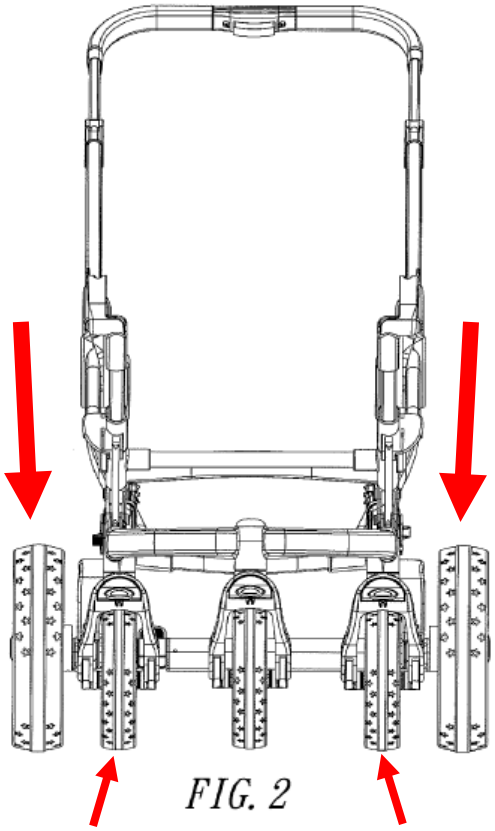

FIG. 2

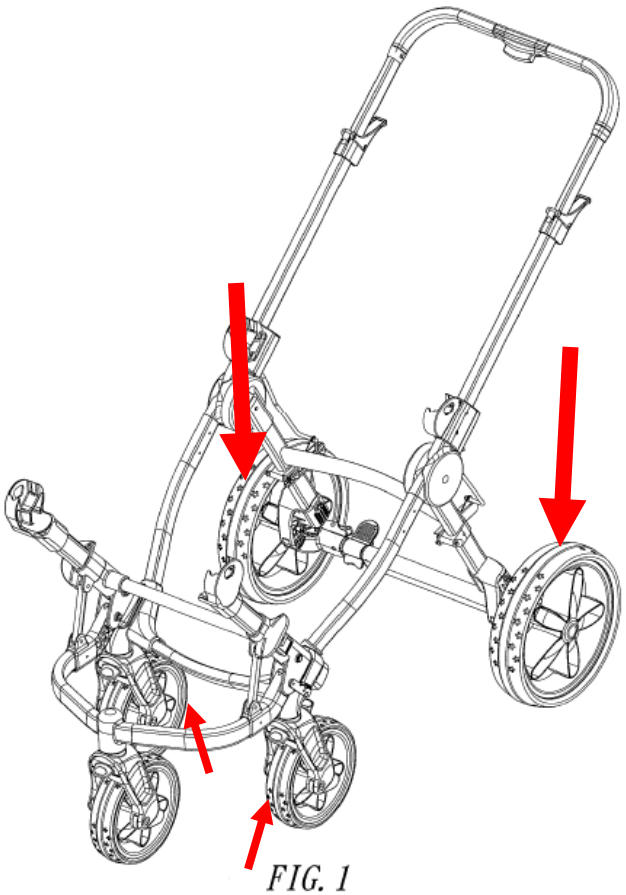

FIG. 1

59. The '459 Patent discloses or renders obvious "a first seat coupled to the stroller frame at a first vertical position of the stroller frame closer to a handle of the stroller and configured to hold a first child in the stroller":

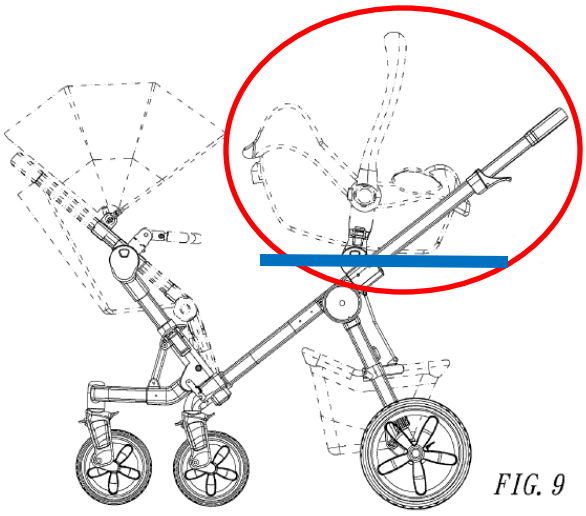


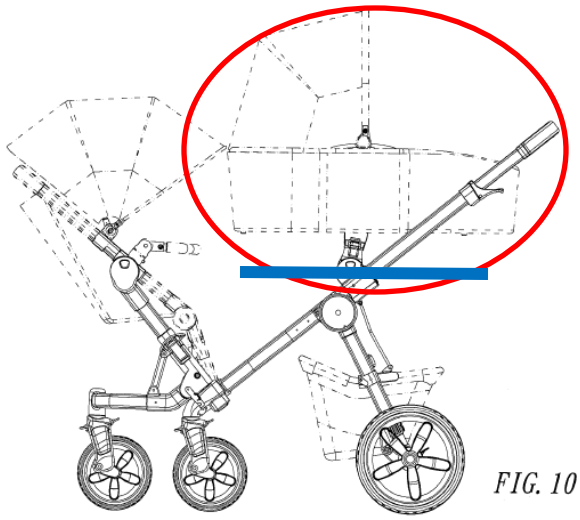


60. The '459 Patent discloses or renders obvious "a second seat attachment coupled to the stroller frame at a second vertical position substantially below the first vertical position and closer to the front wheels and comprising":

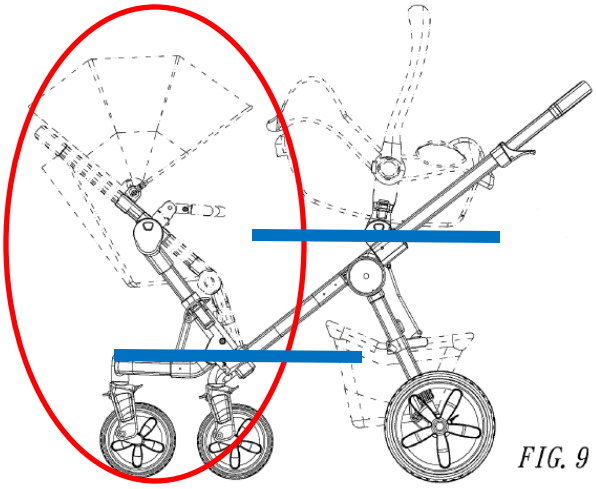


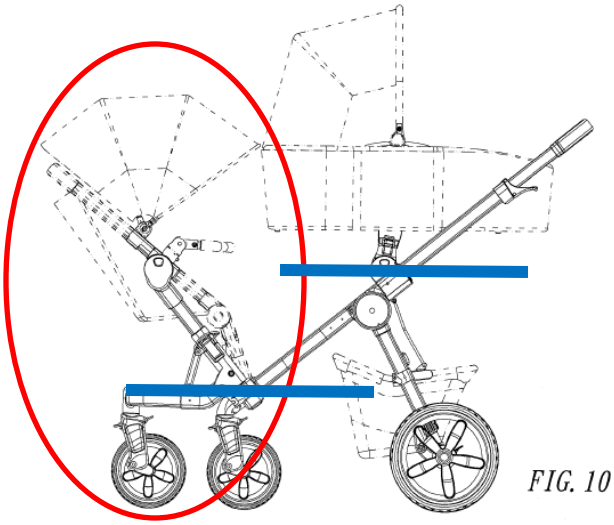


61. The '459 Patent discloses or renders obvious "a left seat support element, wherein the left seat support element comprises":

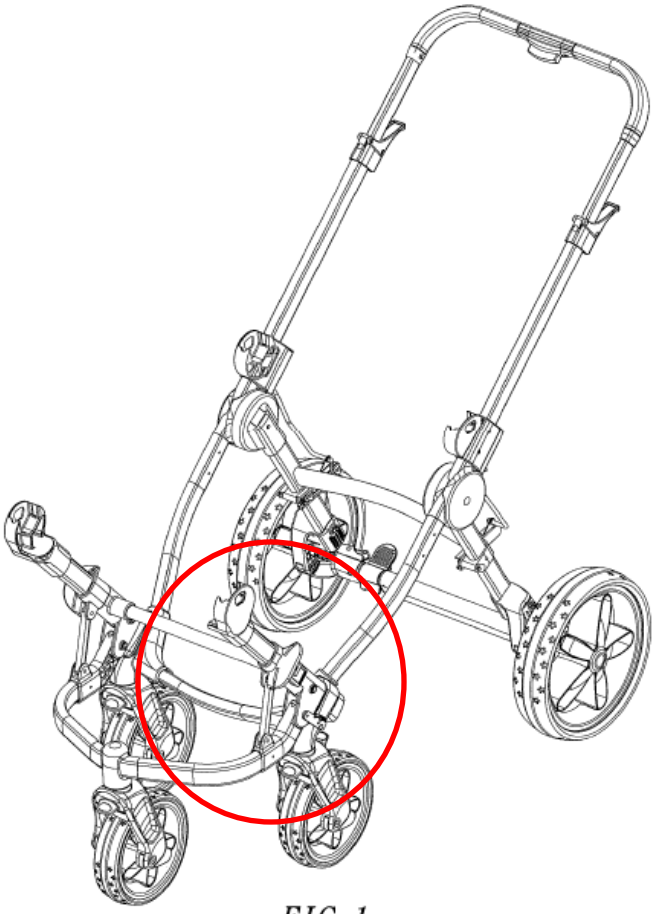

FIG. 1

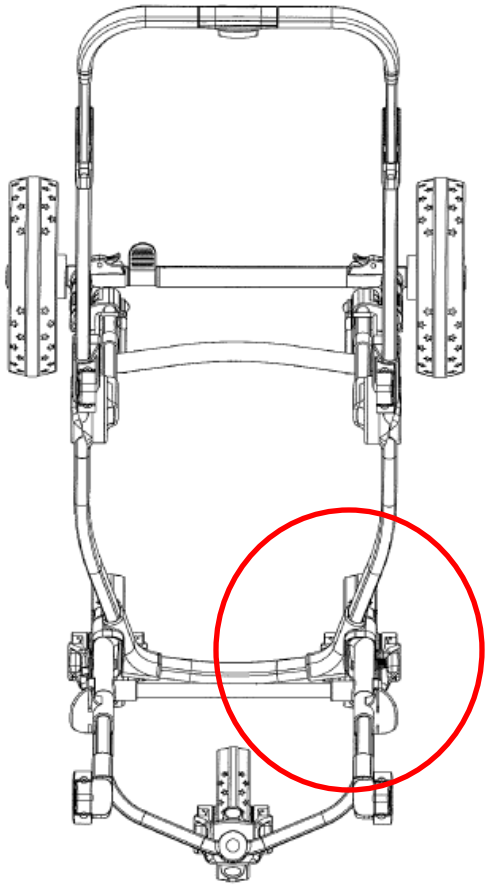

FIG. 6

62. The '459 Patent discloses or renders obvious "a first connector portion releasably connected to the stroller frame closer to a left front wheel and a left seat connector releasably connecting a second seat in either a forward or backward position; and":

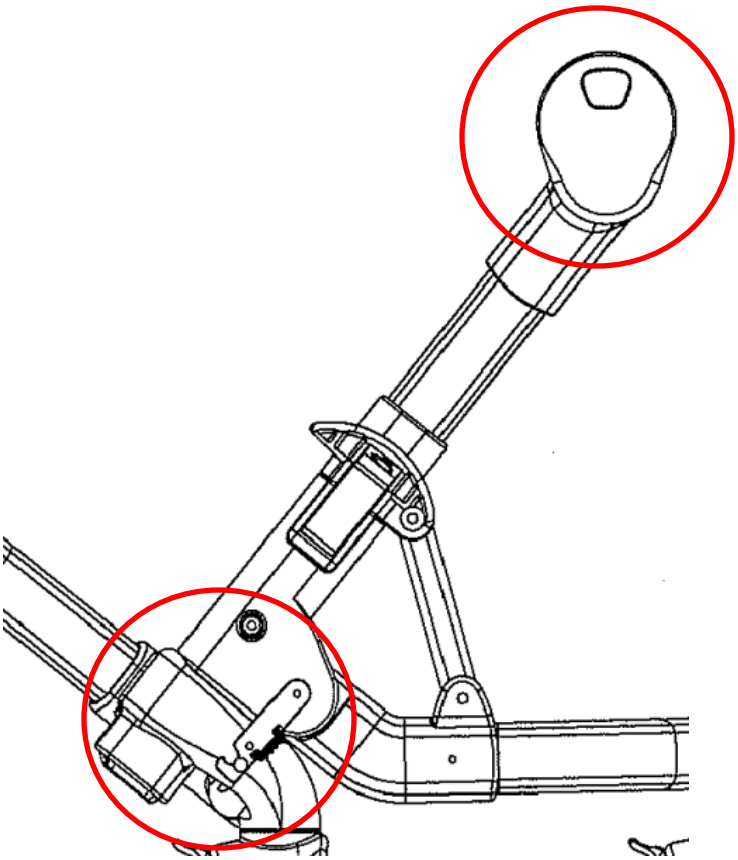

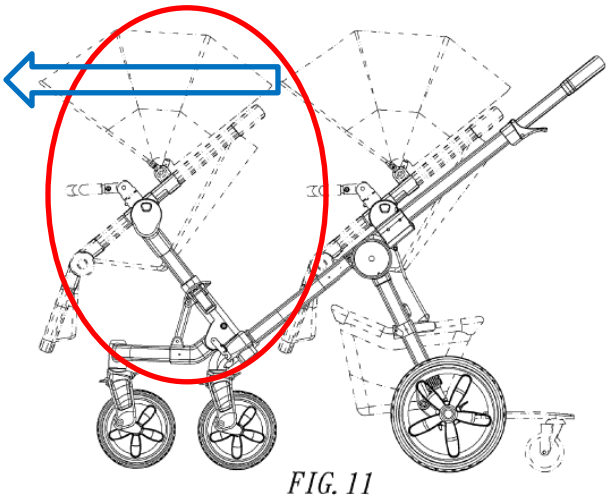

FIG. 11

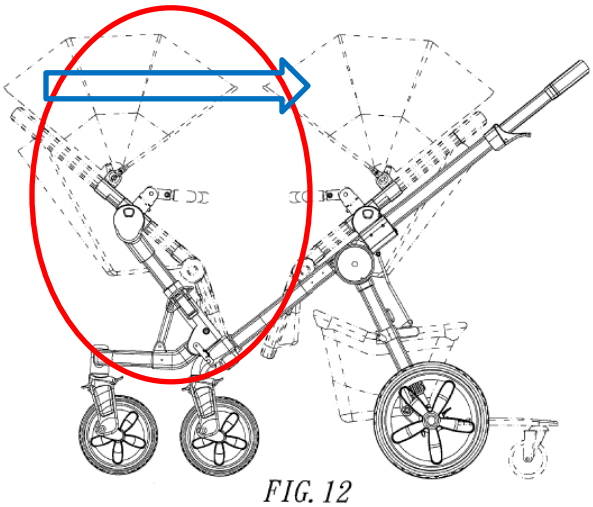

FIG. 12

63. The '459 Patent discloses or renders obvious "a right seat support element, wherein the right seat support element comprises":

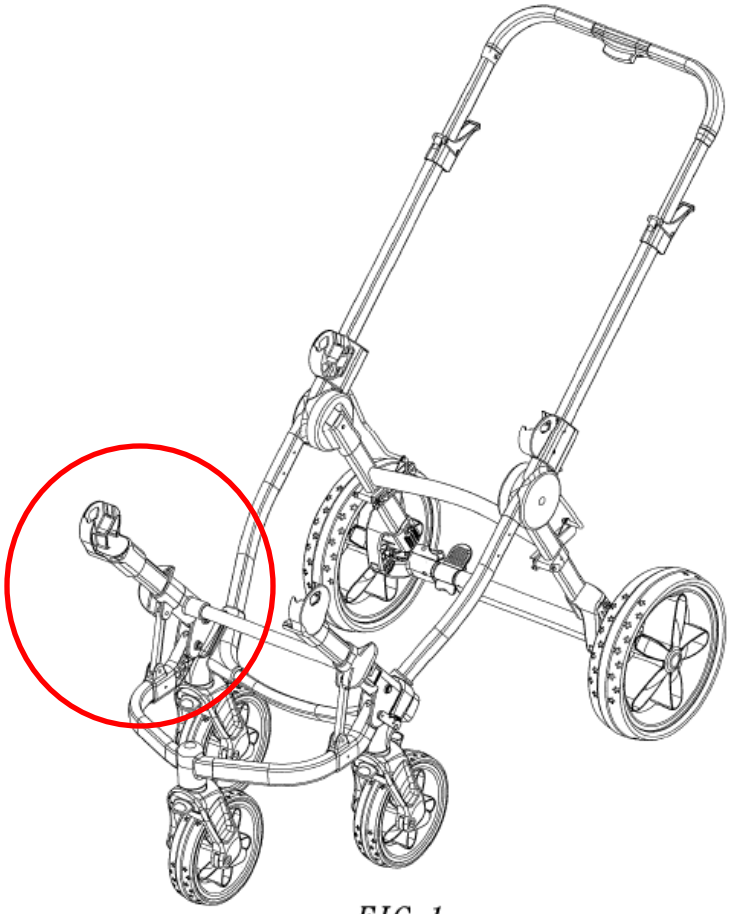

FIG. 1

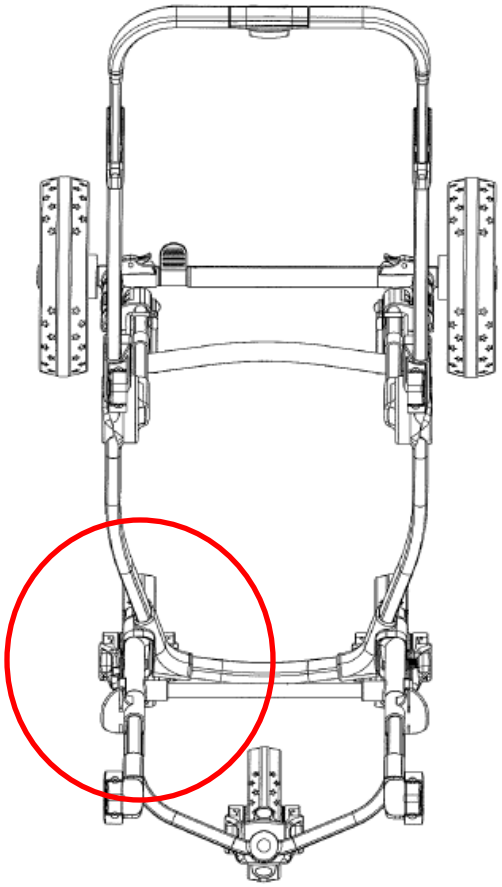

FIG. 6

64. The '459 Patent discloses or renders obvious "a second connector portion releasably connected to the stroller frame closer to a right front wheel and a right seat connector releasably connecting the second seat in either a forward or backward position between the left and right seat connectors; and":

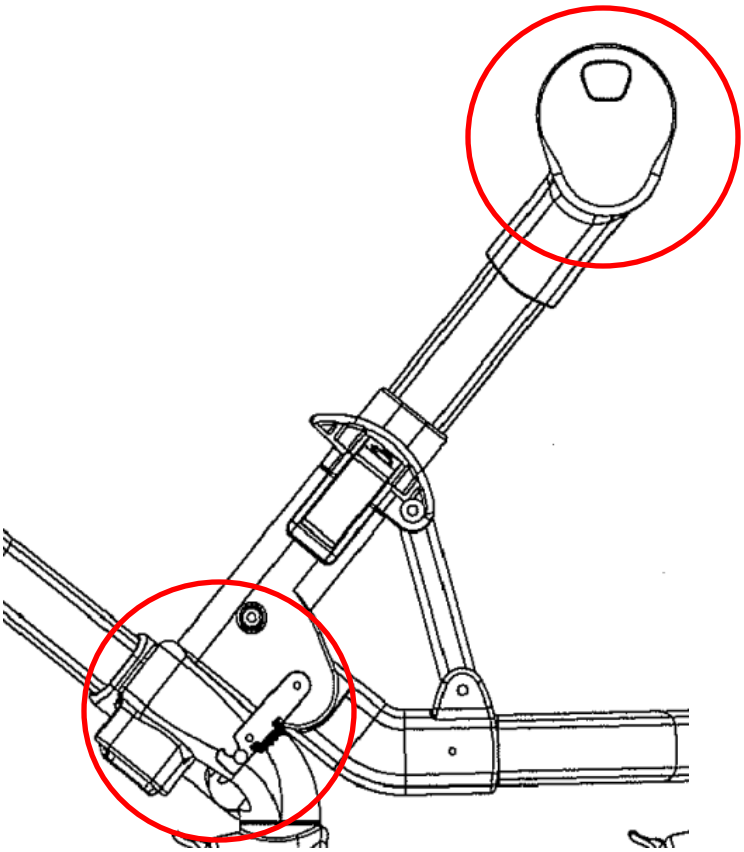

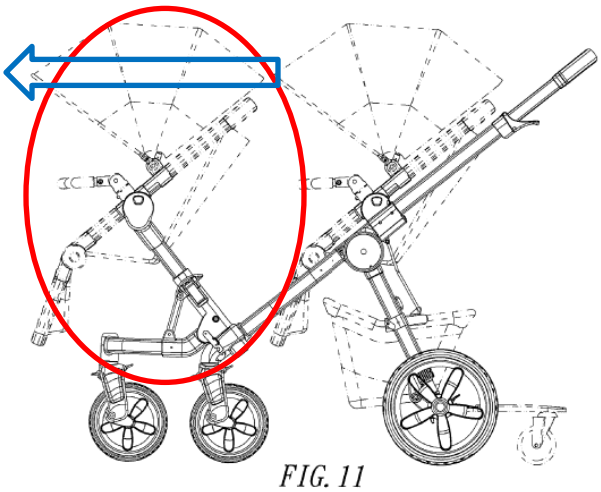

FIG. 11

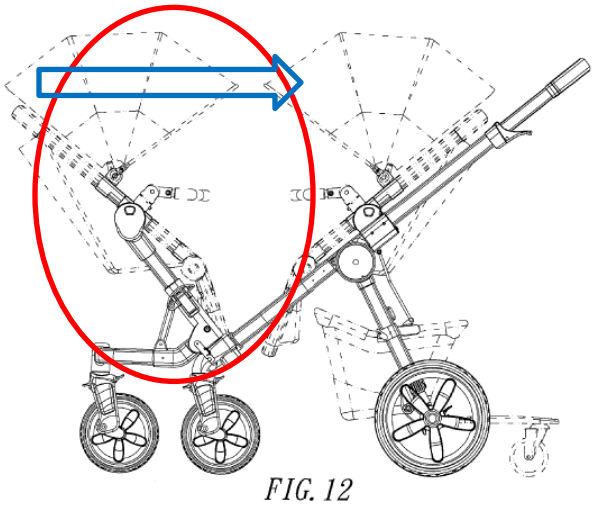

FIG. 12

65. The '459 Patent discloses or renders obvious "the second seat releasably connected to the left seat connector and the right seat connector and configured to hold a second child in the stroller while the first seat holds the first child":

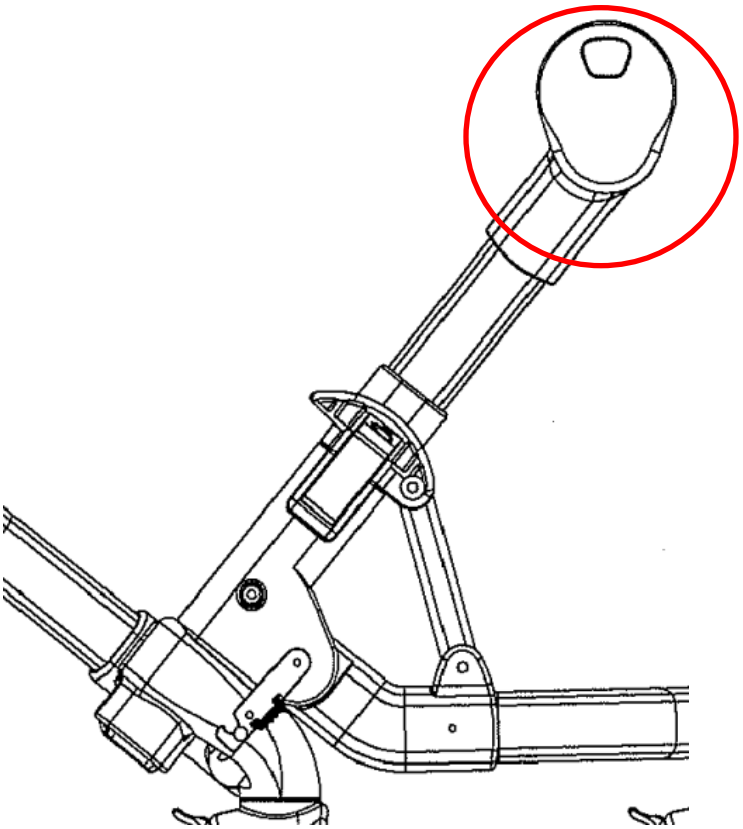

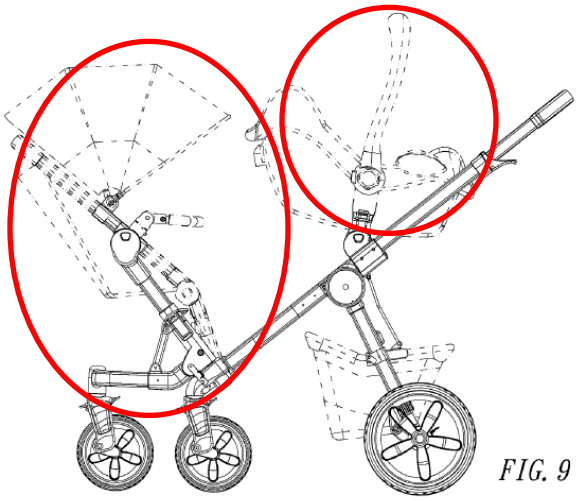

FIG. 9

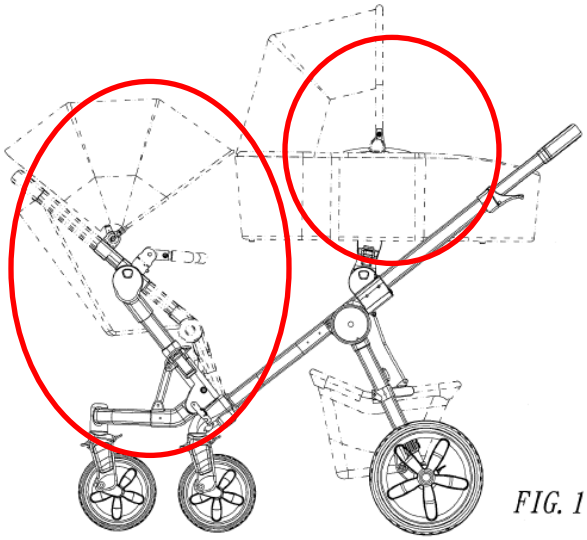

FIG. 10

66. As a result of Baby Jogger's actions and statements, including the filing of this action, an actual controversy now exists between UPPAbaby and Baby Jogger regarding the validity of the asserted claims of the '550 Patent.

67. UPPAbaby is entitled to a declaration that any and all asserted claims of the '550 Patent are invalid.

**COUNT III**

**Declaratory Judgment of Invalidity of the '568 Patent**

68. UPPAbaby repeats and realleges each and every allegation in Paragraphs 1-67 of UPPAbaby's Counterclaims and Demand for Jury Trial, as if fully set forth herein.

69. The asserted claims of the '568 Patent are invalid under at least 35 U.S.C. §§ 102 and/or 103.

70. Independent claim 1 of the '568 Patent recites as follows:

> 1. A stroller, comprising:
>
> a stroller frame comprising:
>
> a first upper tube support frame;
>
> a second upper tube support frame;
>
> a first front wheel support frame rotatably adjusted to be substantially parallel with respect to the first upper tube support frame when the stroller frame is unfolded from a folded configuration;
>
> a second front wheel support frame rotatably adjusted to be substantially parallel with respect to the second upper tube support frame when the stroller frame is unfolded from a folded configuration;
>
> a first back wheel support frame rotated with respect to the first upper tube support frame; and
>
> a second back wheel support frame rotated with respect to the second upper tube support frame;
>
> a plurality of wheels comprising at least one front wheel and a plurality of back wheels;
>
> a first seat coupled along the first upper tube support frame and the second upper tube support frame at a first vertical position of the stroller frame;
>
> a first seat attachment adapter coupled to the first front wheel support frame at a second vertical position of the stroller frame that is below the first vertical position;

a second seat attachment adapter coupled to the second front wheel support frame at a third vertical position of the stroller frame that is below the first vertical position;

wherein a second seat is removably coupled to the first seat attachment adapter and the second seat attachment adapter to position the second seat at a fourth vertical position that is below the first vertical position and wherein the second vertical position and the third vertical position are at a same vertical height.

71. For example, and without limitation, the '459 Patent anticipates or renders obvious claim 1 of the '568 Patent.

72. The '459 Patent discloses or renders obvious "A stroller":

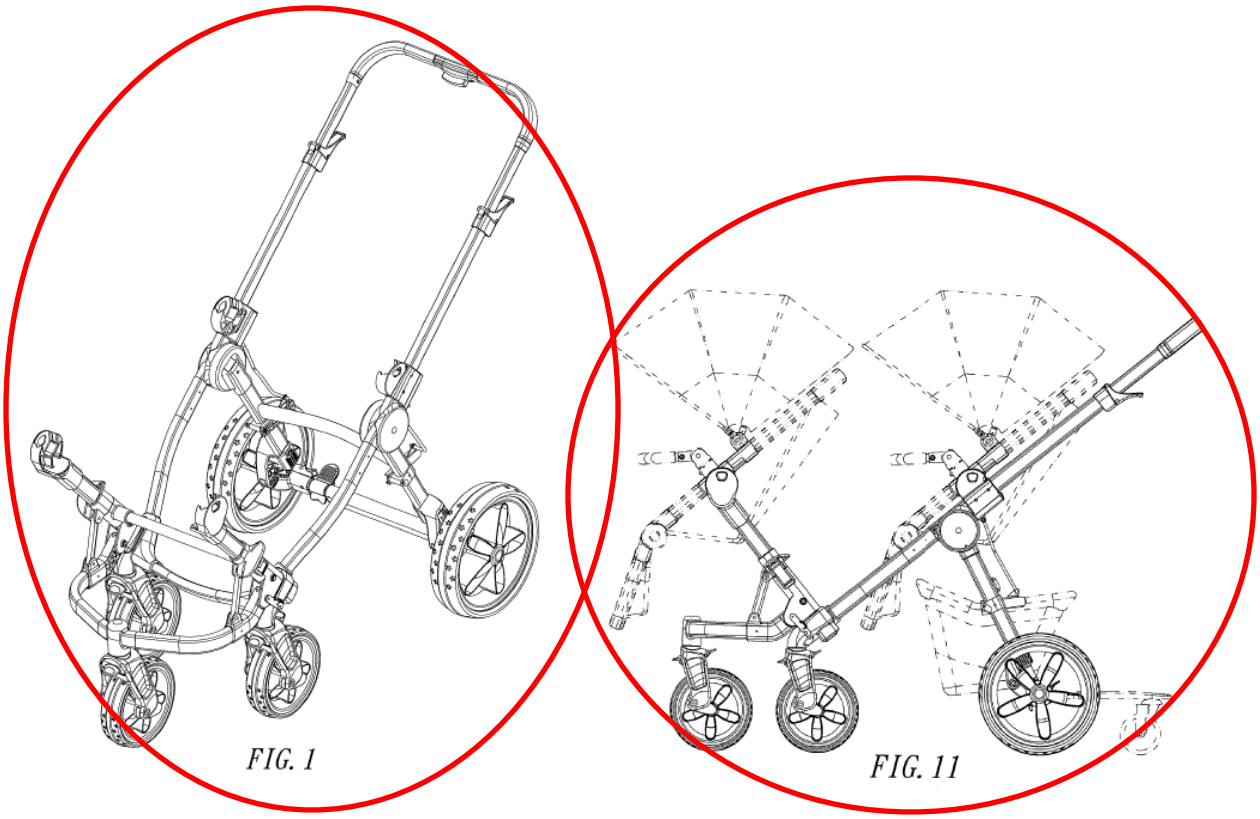


73. The '459 Patent discloses or renders obvious "a stroller frame comprising":

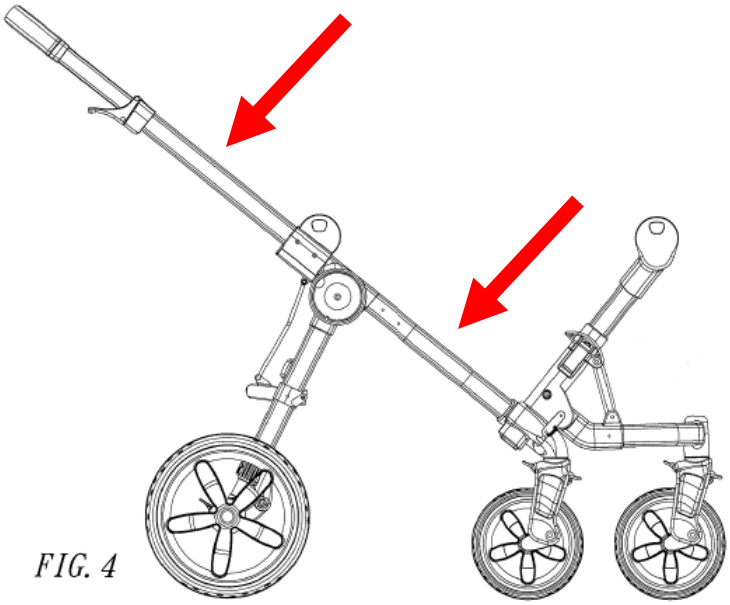

FIG. 4

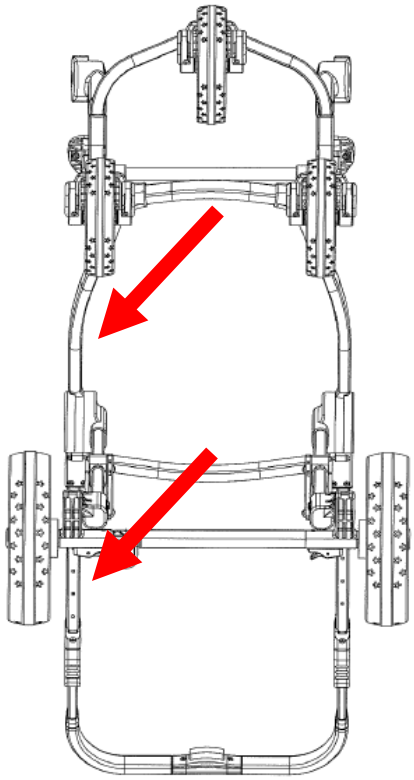

FIG. 7

74. The '459 Patent discloses or renders obvious "a first upper tube support frame":

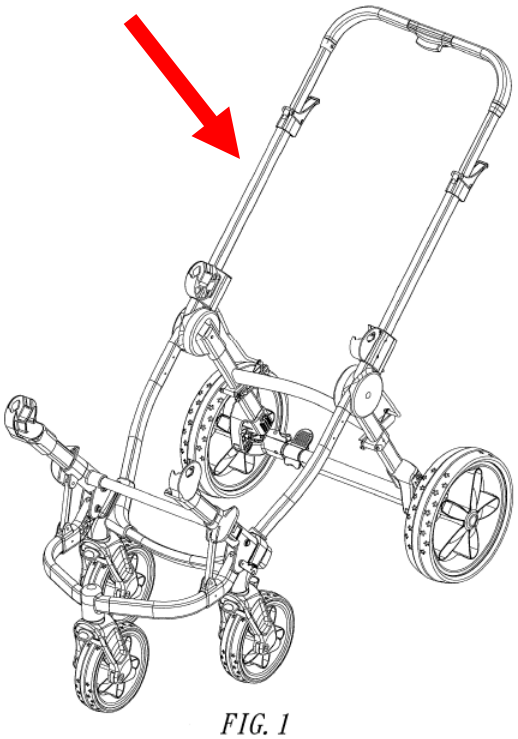

FIG. 1

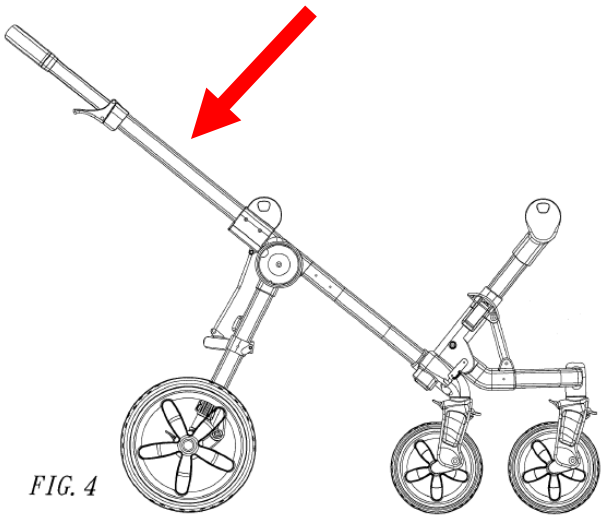

FIG. 4

75. The '459 Patent discloses or renders obvious "a second upper tube support frame":

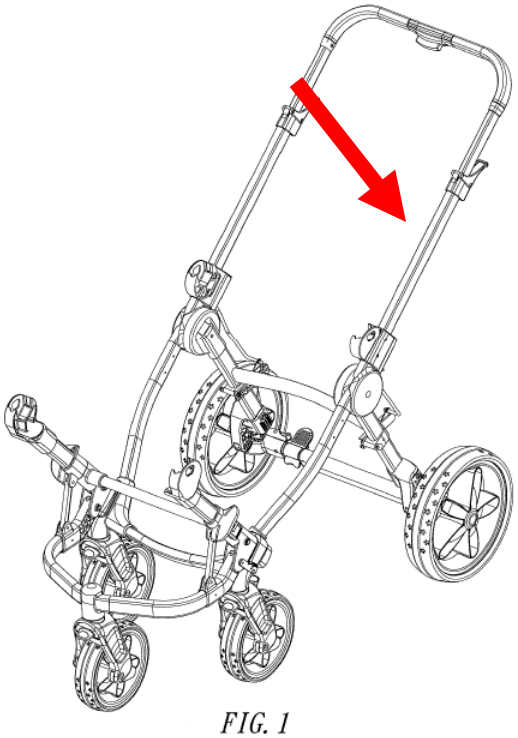

FIG. 1

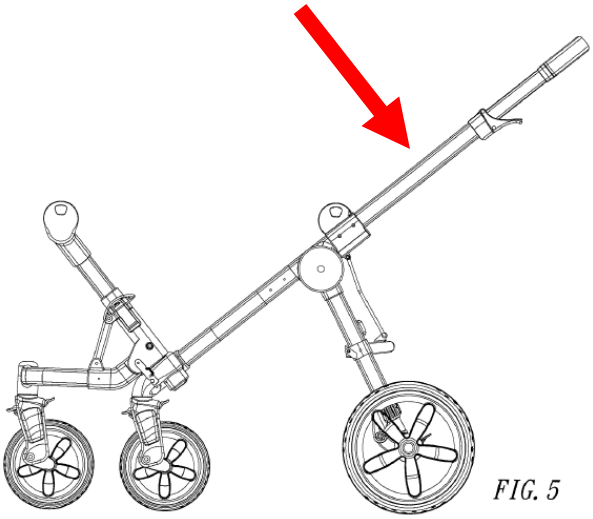

FIG. 5

76. The '459 Patent discloses or renders obvious "a first front wheel support frame rotatably adjusted to be substantially parallel with respect to the first upper tube support frame when the stroller frame is unfolded from a folded configuration":

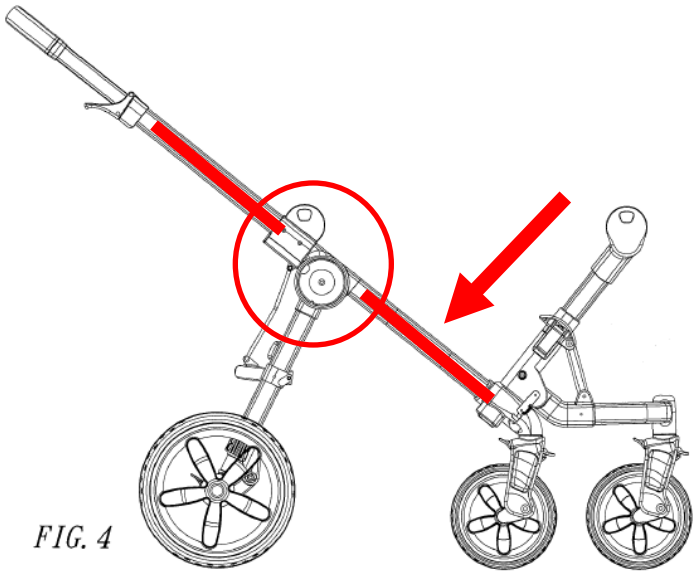

FIG. 4

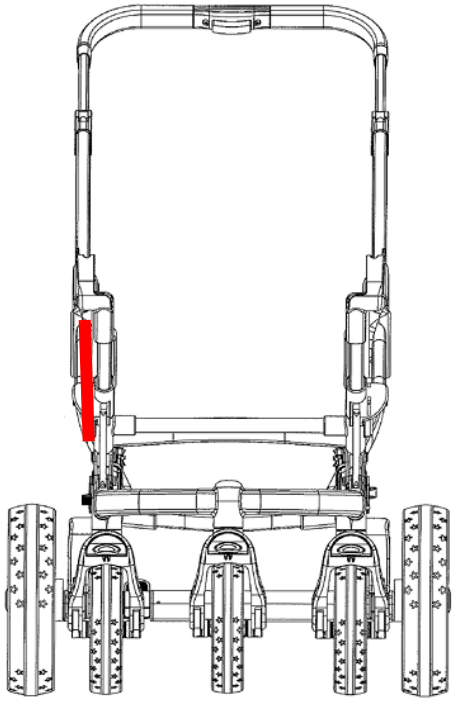

FIG. 2

77. The '459 Patent discloses or renders obvious "a second front wheel support frame rotatably adjusted to be substantially parallel with respect to the second upper tube support frame when the stroller frame is unfolded from a folded configuration":

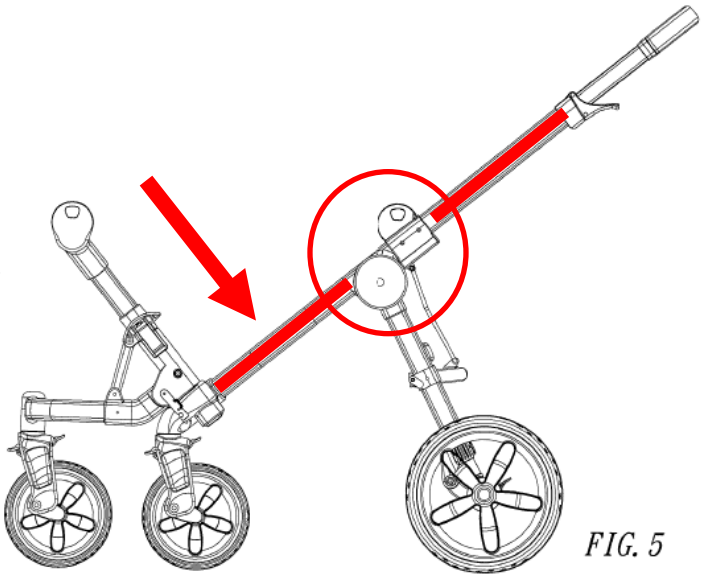

FIG. 5

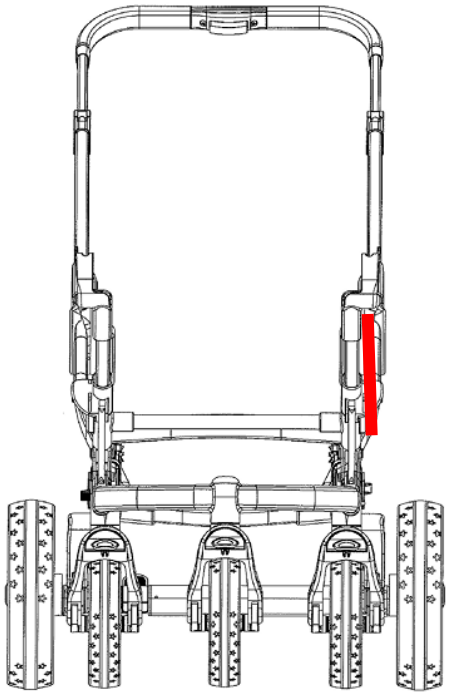

FIG. 2

78. The '459 Patent discloses or renders obvious "a first back wheel support frame rotated with respect to the first upper tube support frame; and":

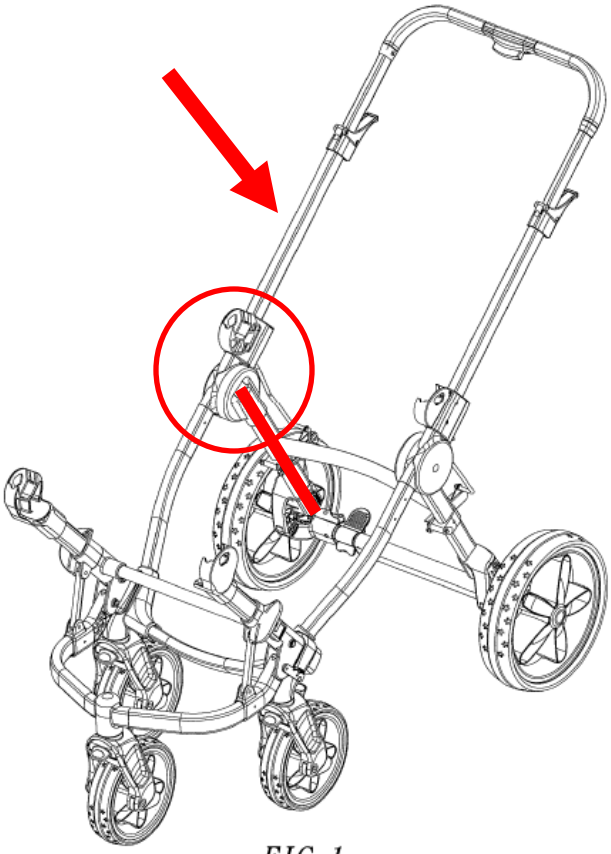

FIG. 1

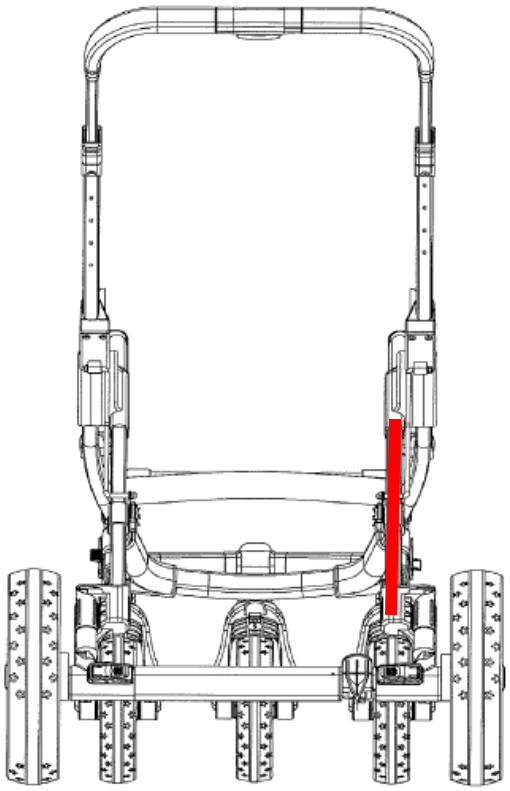

FIG. 3

79. The '459 Patent discloses or renders obvious "a second back wheel support frame rotated with respect to the second upper tube support frame":

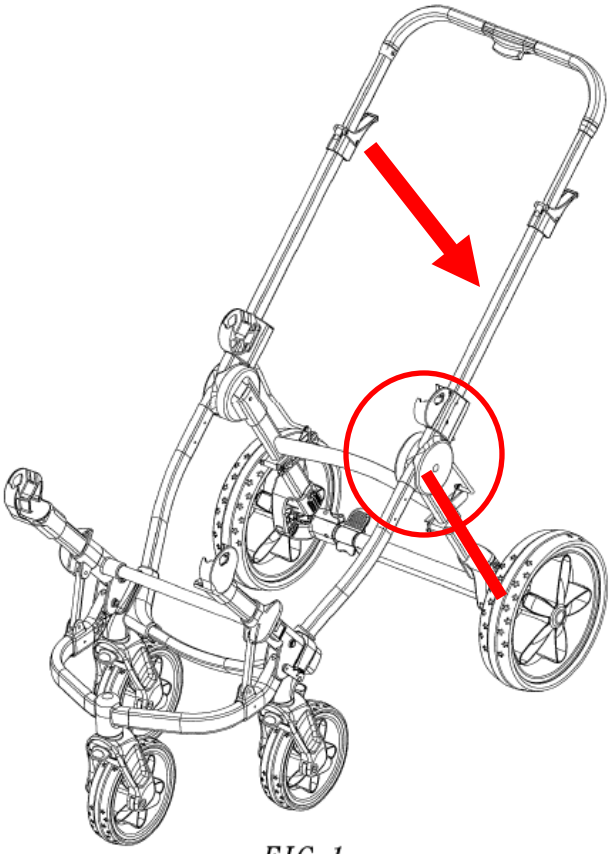

FIG. 1

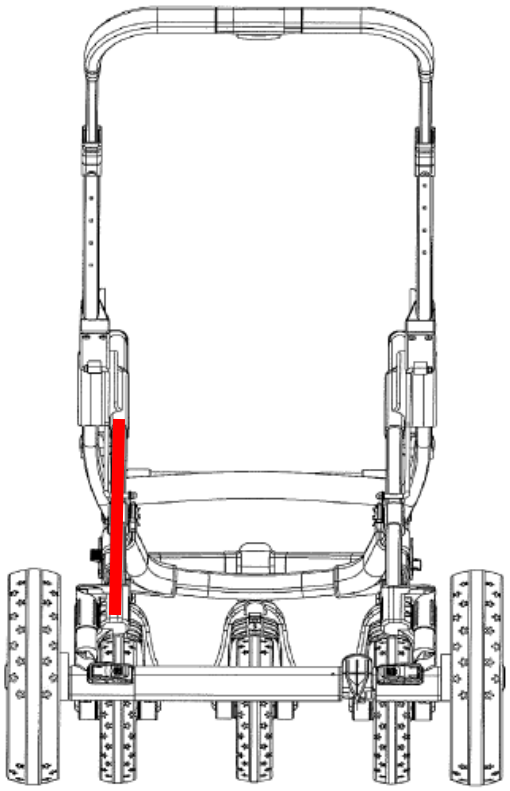

FIG. 3

80. The '459 Patent discloses or renders obvious "a plurality of wheels comprising at least one front wheel and a plurality of back wheels":

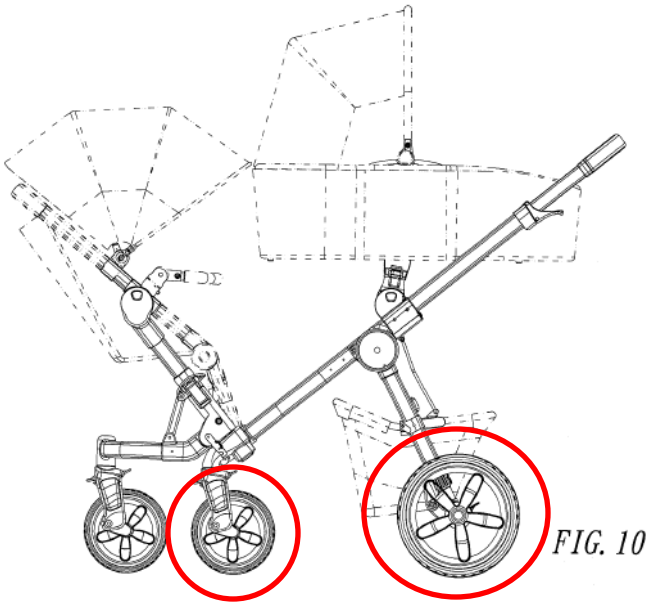
FIG. 10

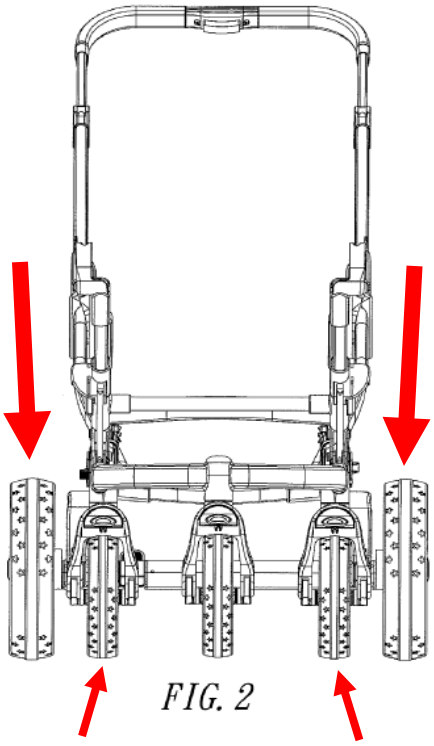
FIG. 2

81. The '459 Patent discloses or renders obvious "a first seat coupled along the first upper tube support frame and the second upper tube support frame at a first vertical position of the stroller frame":

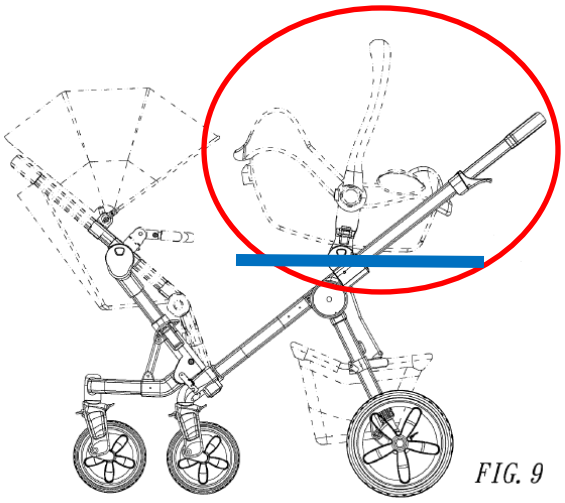
FIG. 9

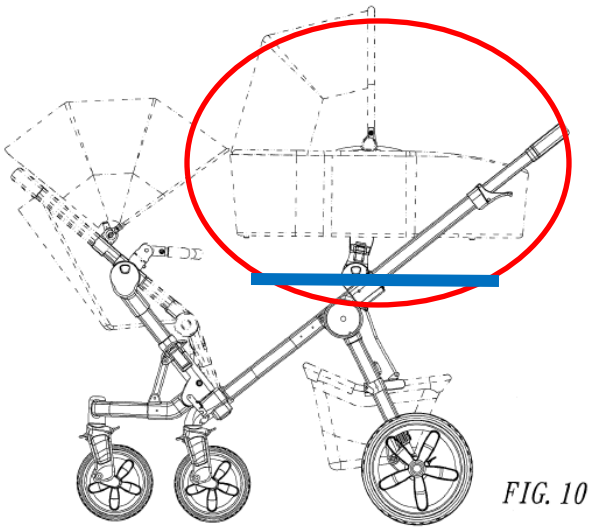
FIG. 10

82. The '459 Patent discloses or renders obvious "a first seat attachment adapter coupled to the first front wheel support frame at a second vertical position of the stroller frame that is below the first vertical position":

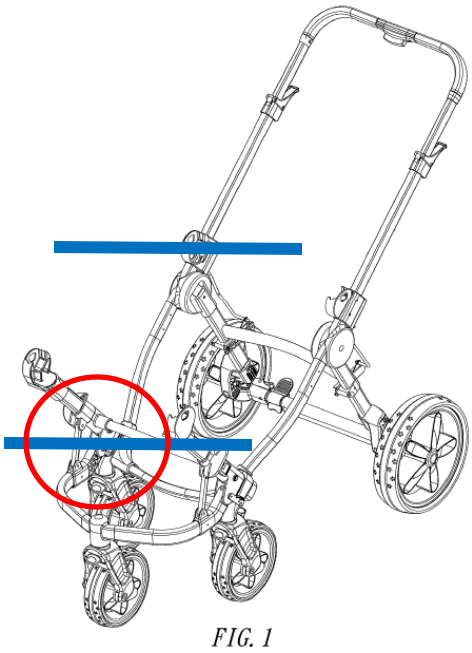


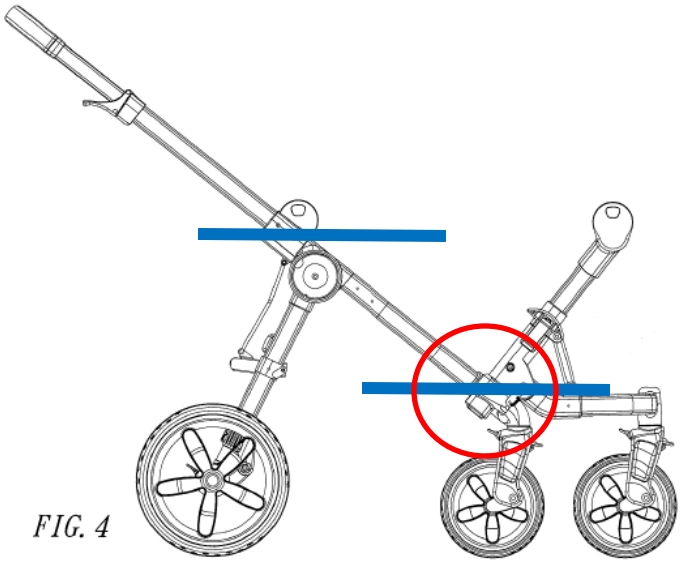


83. The '459 Patent discloses or renders obvious "a second seat attachment adapter coupled to the second front wheel support frame at a third vertical position of the stroller frame that is below the first vertical position":

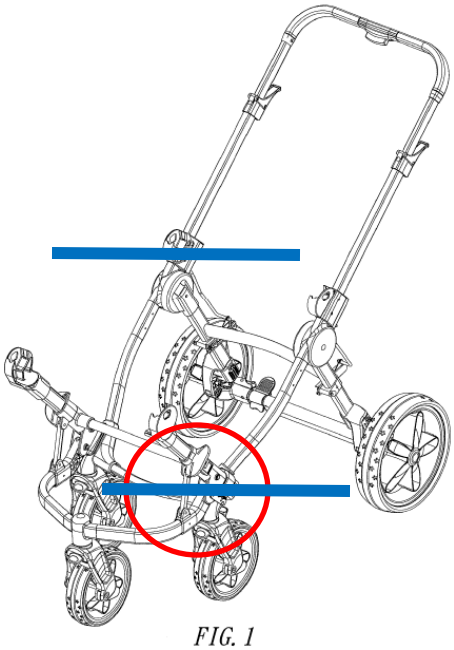

FIG. 1

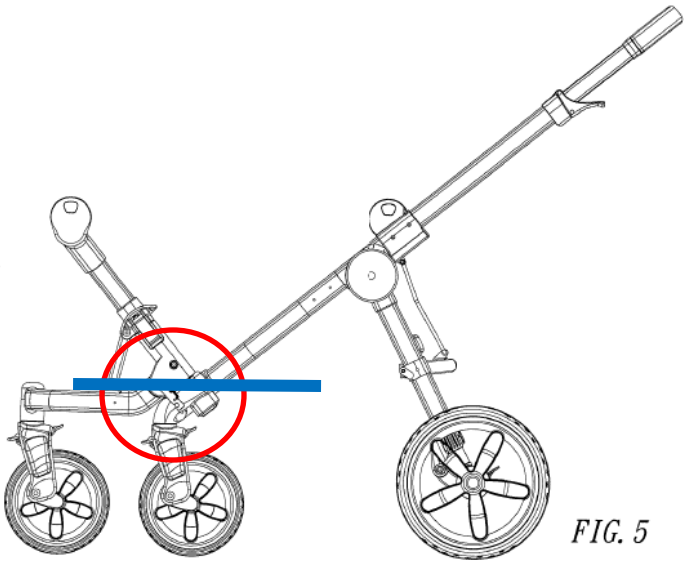

FIG. 5

84. The '459 Patent discloses or renders obvious "wherein a second seat is removably coupled to the first seat attachment adapter and the second seat attachment adapter to position the second seat at a fourth vertical position that is below the first vertical position and wherein the second vertical position and the third vertical position are at a same vertical height":

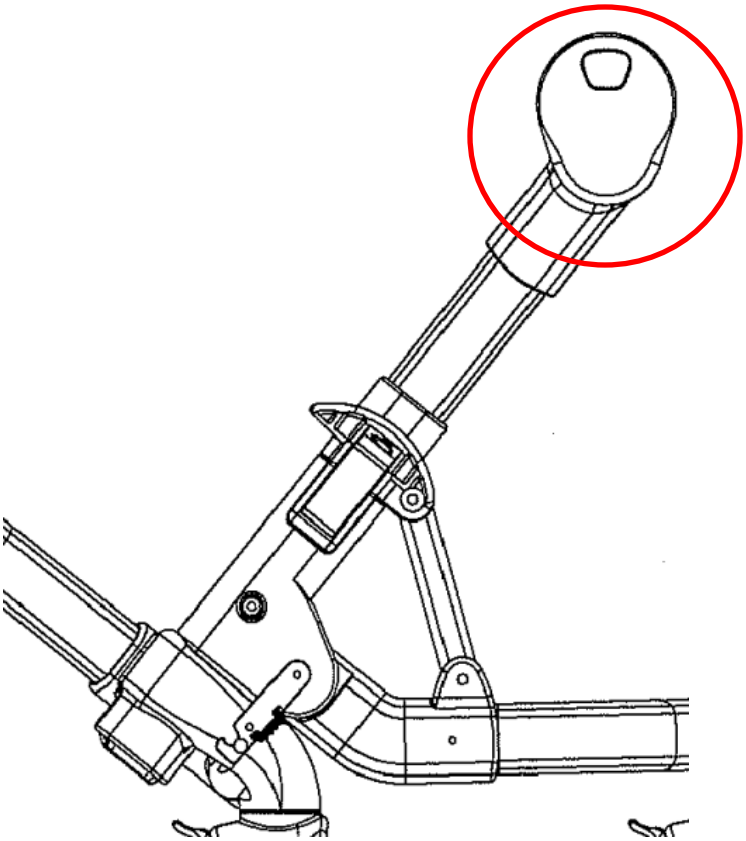

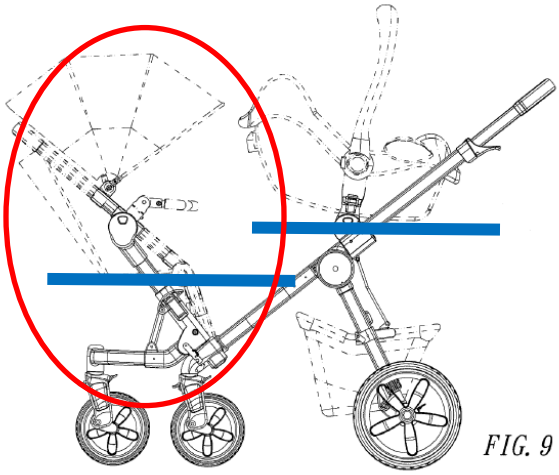

FIG. 9

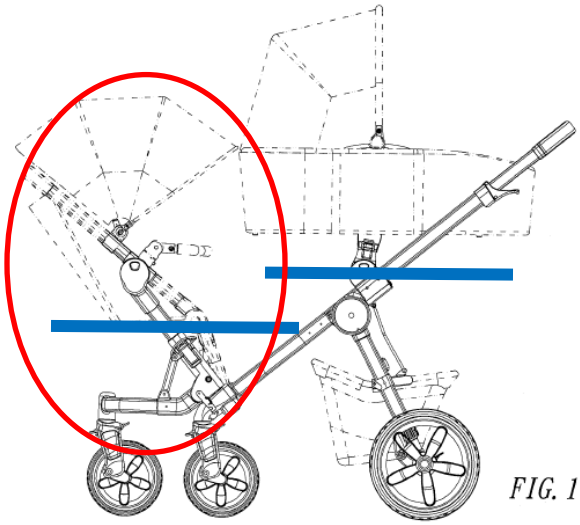

FIG. 10

85. As a result of Baby Jogger's actions and statements, including the filing of this action, an actual controversy now exists between UPPAbaby and Baby Jogger regarding the validity of the asserted claims of the '568 Patent.

86. UPPAbaby is entitled to a declaration that any and all asserted claims of the '568 Patent are invalid.

**COUNT IV**

**Declaratory Judgment of Invalidity of the '231 Patent**

87. UPPAbaby repeats and realleges each and every allegation in Paragraphs 1-86 of UPPAbaby's Counterclaims and Demand for Jury Trial, as if fully set forth herein.

88. The asserted claims of the '231 Patent are invalid under at least 35 U.S.C. §§ 102 and/or 103.

89. Independent claim 1 of the '231 Patent recites as follows:

> 1. A stroller system for supporting a front stroller seat and a rear stroller seat, the system comprising:
>
> a pair of rear wheels;
>
> a pair of front wheels;
>
> a frame including a handle portion, a rear wheel support portion, a front wheel support portion and a folding mechanism connecting the front wheel support portion and the handle portion in both an unfolded configuration and in a folded configuration, wherein the folding mechanism connects the rear wheel support portion to the front wheel support portion and the handle portion, wherein the frame includes a stroller seat support portion positioned at a first vertical position adjacent the handle portion, and wherein the front wheel support portion and the handle portion are substantially parallel when the frame is in the unfolded configuration; and
>
> a front seat attachment configured for attachment to the front wheel support portion at a second vertical position substantially lower than the first vertical position,
>
> wherein the front seat attachment is configured to releasably connect to and support the front stroller seat in either a forward-facing configuration or a backward-facing configuration,
>
> wherein the front seat attachment is configured to support the front stroller seat substantially over the front wheels so that a center of gravity of the stroller system is between the front wheels and the rear wheels;



EVENFLO ET AL. EX1063

wherein the rear wheel support portion extends diagonally from the front wheel support portion when the frame is in the unfolded configuration, and the rear wheel support portion is disposed adjacent to both the front wheel support portion and the handle portion when the frame is in the folded configuration; and

wherein the stroller seat support portion positioned at the first vertical position and the front seat attachment at the second vertical position create an inline descending configuration of the rear stroller seat and the front stroller seat.

90. For example, and without limitation, the '459 Patent anticipates or renders obvious claim 1 of the '231 Patent.

91. The '459 Patent discloses or renders obvious "A stroller system for supporting a front stroller seat and a rear stroller seat, the system comprising":

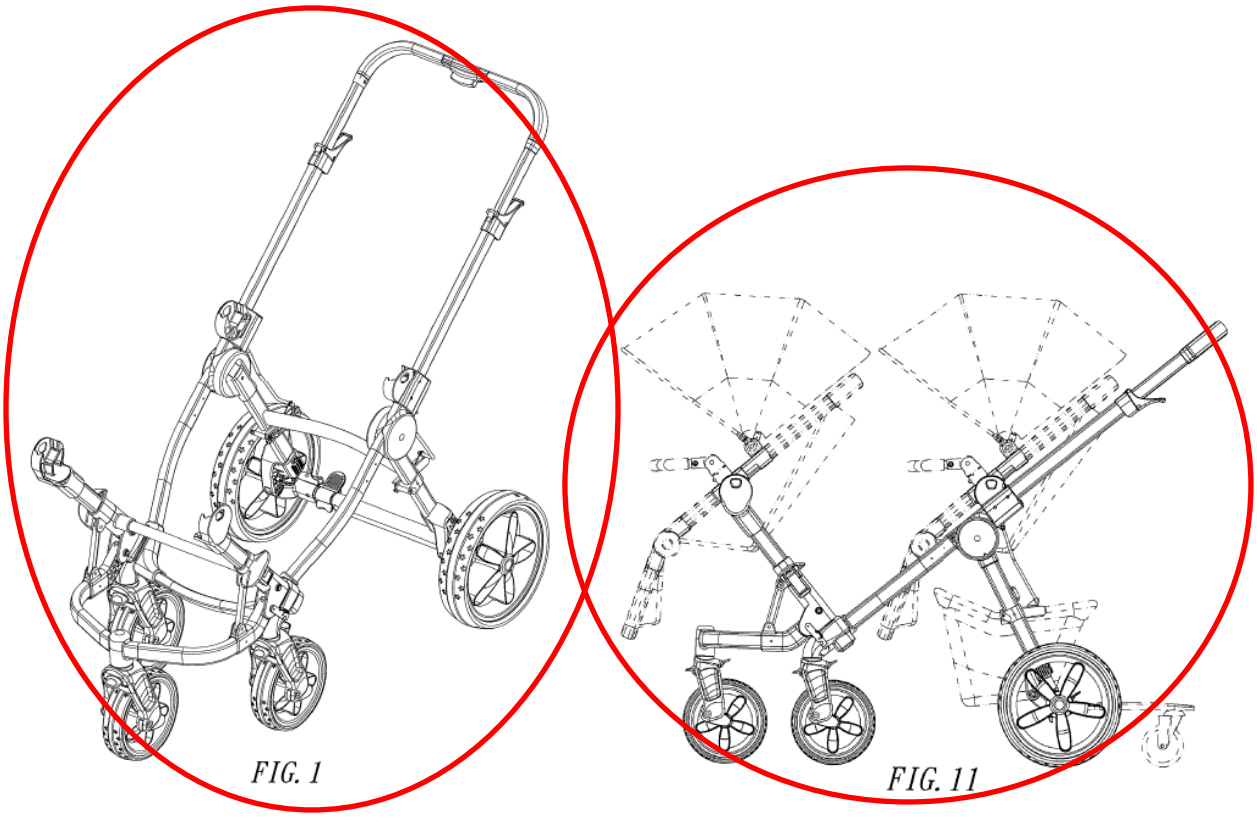


92. The '459 Patent discloses or renders obvious "a pair of rear wheels":

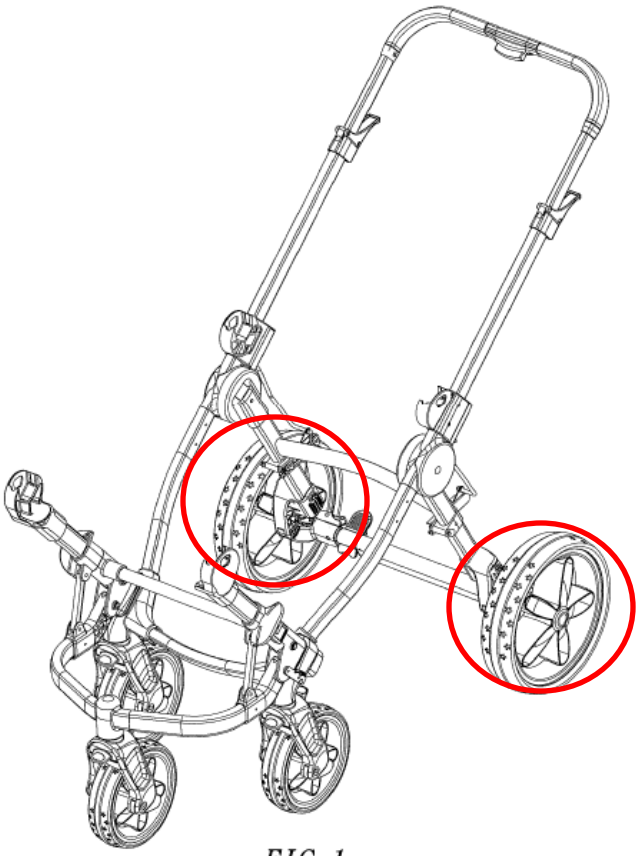

FIG. 1

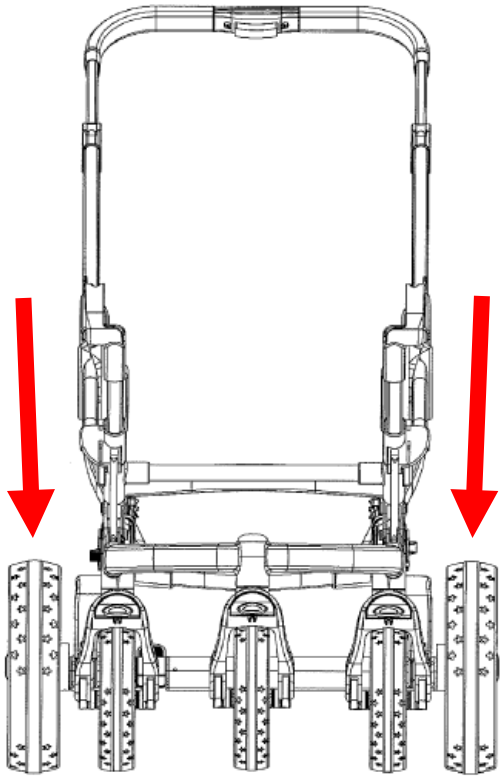

FIG. 2

93. The '459 Patent discloses or renders obvious "a pair of front wheels":

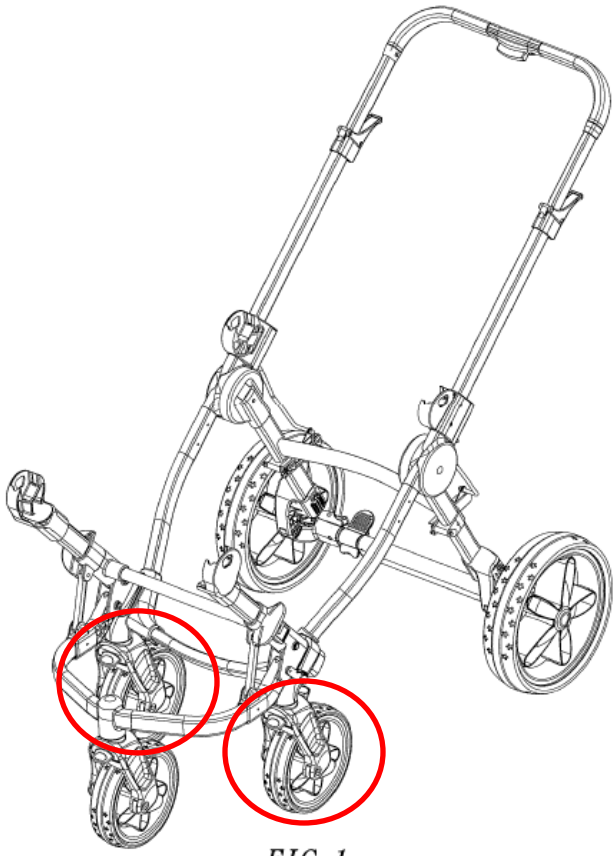

FIG. 1

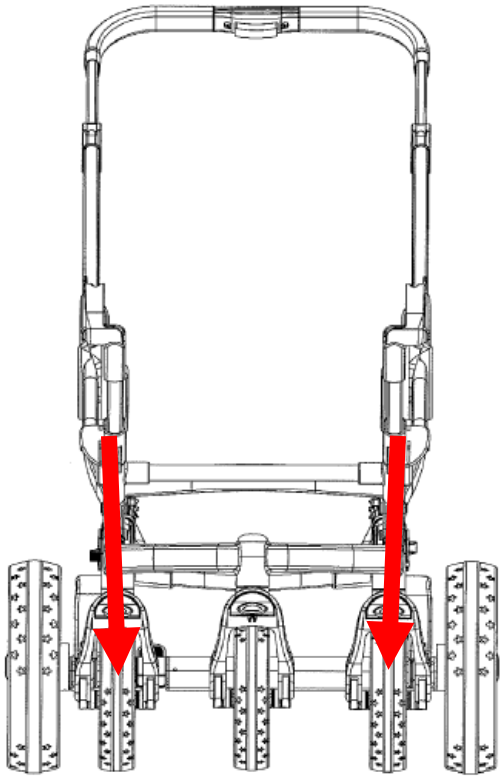

FIG. 2

94. The '459 Patent discloses or renders obvious "a frame including a handle portion, a rear wheel support portion, a front wheel support portion and a folding mechanism connecting the front wheel support portion and the handle portion in both an unfolded configuration and in a folded configuration, wherein the folding mechanism connects the rear wheel support portion to the front wheel support portion and the handle portion, wherein the frame includes a stroller seat support portion positioned at a first vertical position adjacent the handle portion, and wherein the front wheel support portion and the handle portion are substantially parallel when the frame is in the unfolded configuration; and":

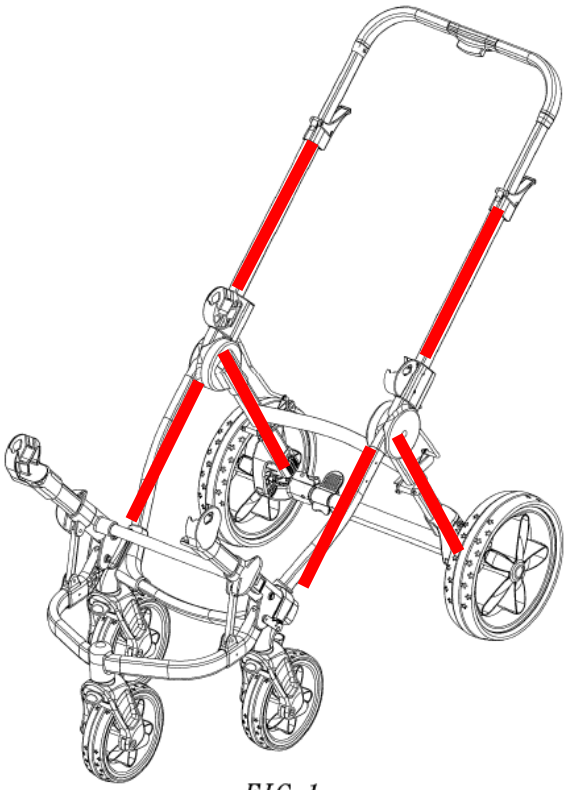

FIG. 1

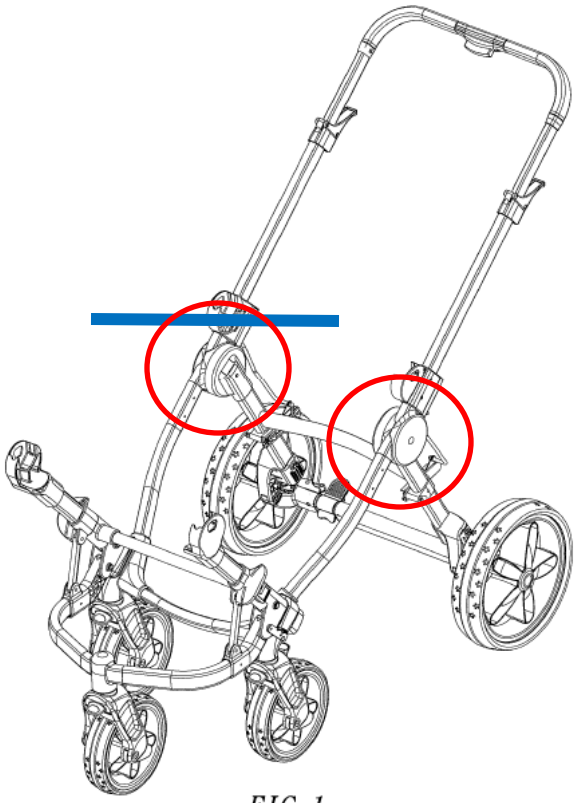

FIG. 1

95. The '459 Patent discloses or renders obvious "a front seat attachment configured for attachment to the front wheel support portion at a second vertical position substantially lower than the first vertical position":

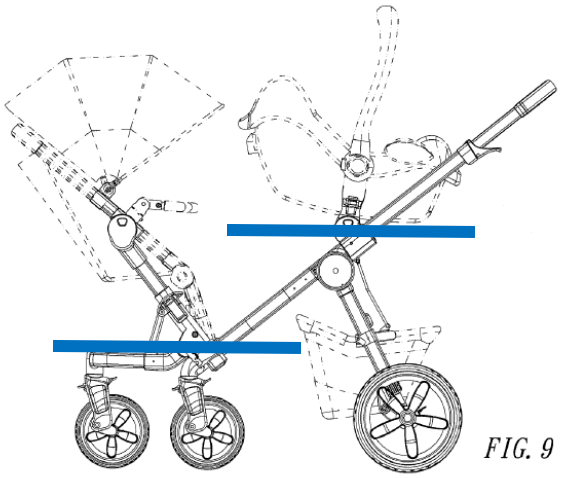

FIG. 9

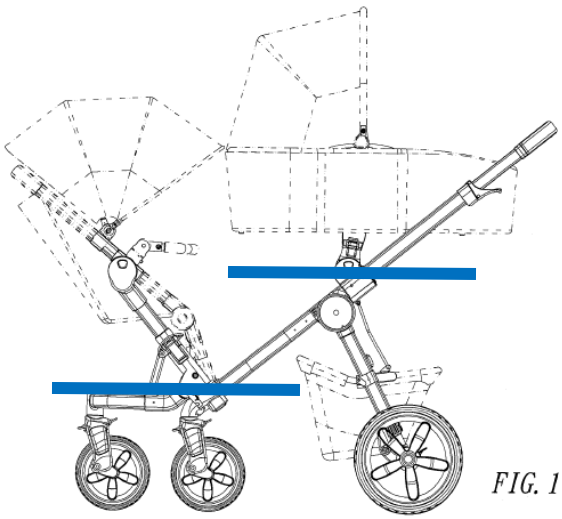

FIG. 10

96. The '459 Patent discloses or renders obvious "wherein the front seat attachment is configured to releasably connect to and support the front stroller seat in either a forward-facing configuration or a backward-facing configuration":

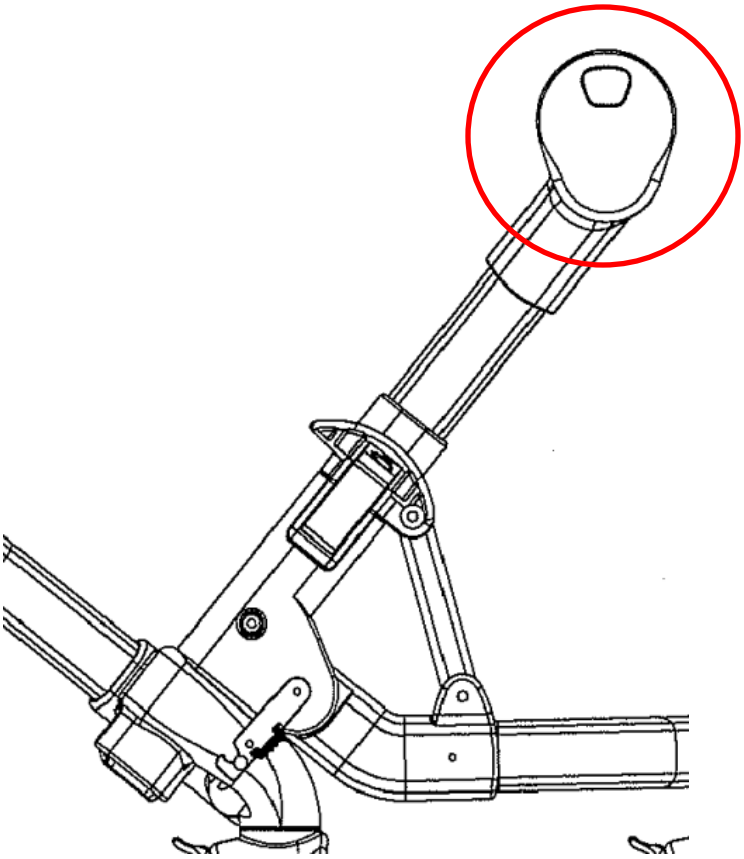

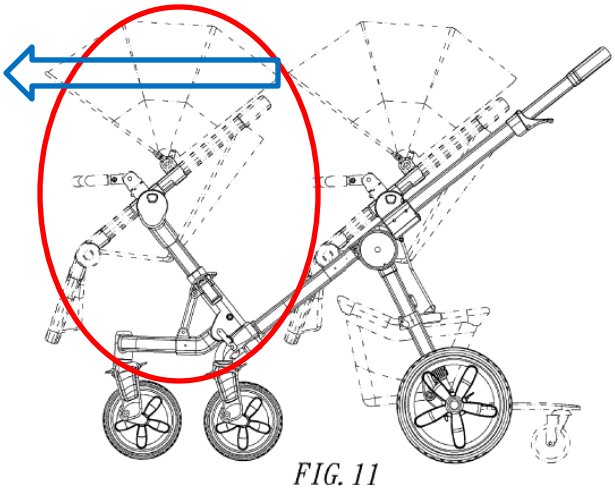

FIG. 11

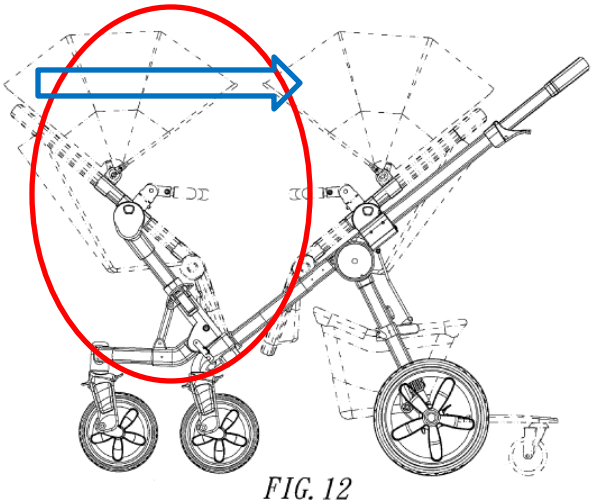

FIG. 12

97. The '459 Patent discloses or renders obvious "wherein the front seat attachment is configured to support the front stroller seat substantially over the front wheels so that a center of gravity of the stroller system is between the front wheels and the rear wheels":

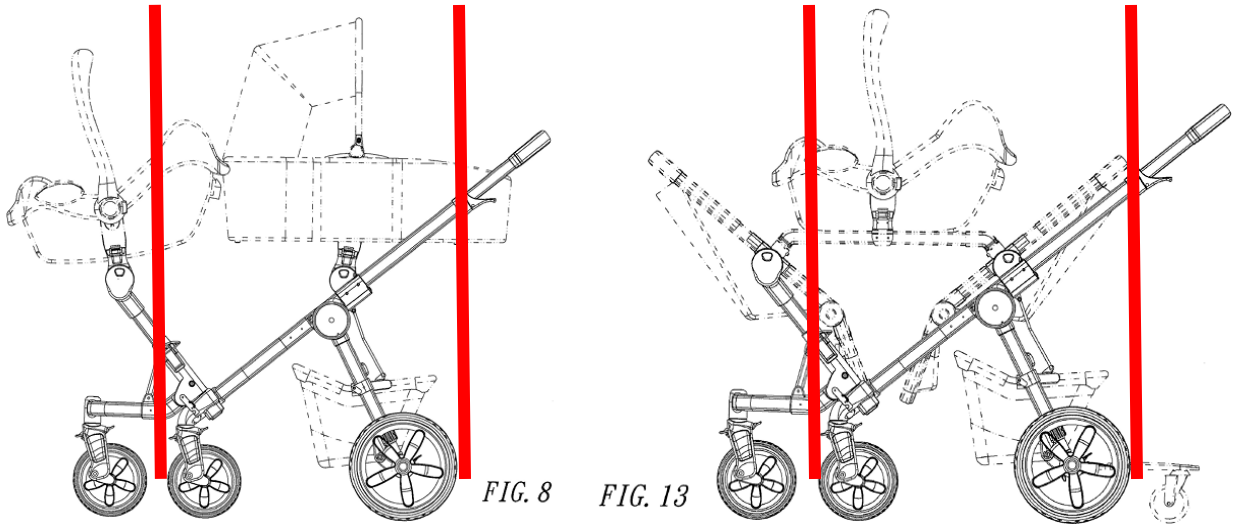


98. The '459 Patent discloses or renders obvious "wherein the rear wheel support portion extends diagonally from the front wheel support portion when the frame is in the unfolded configuration, and the rear wheel support portion is disposed adjacent to both the front wheel support portion and the handle portion when the frame is in the folded configuration; and":

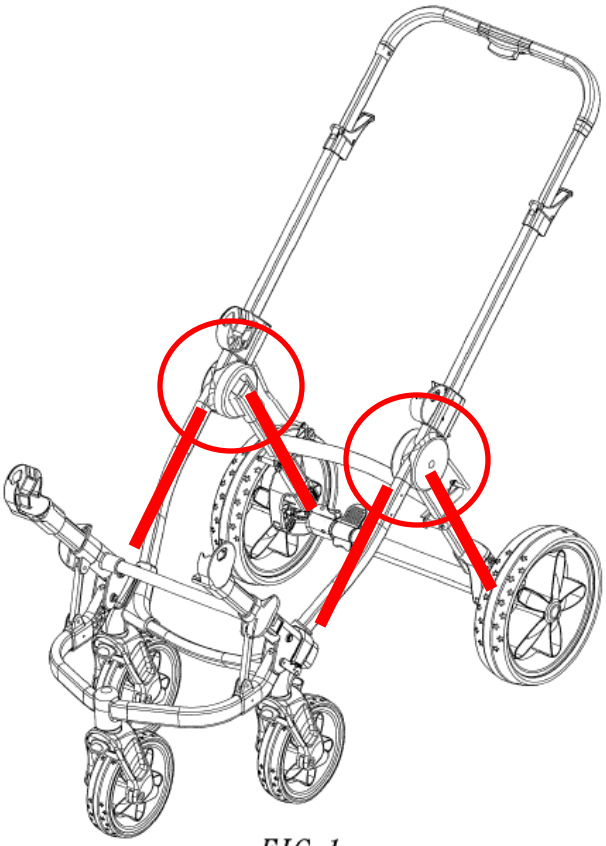

FIG. 1

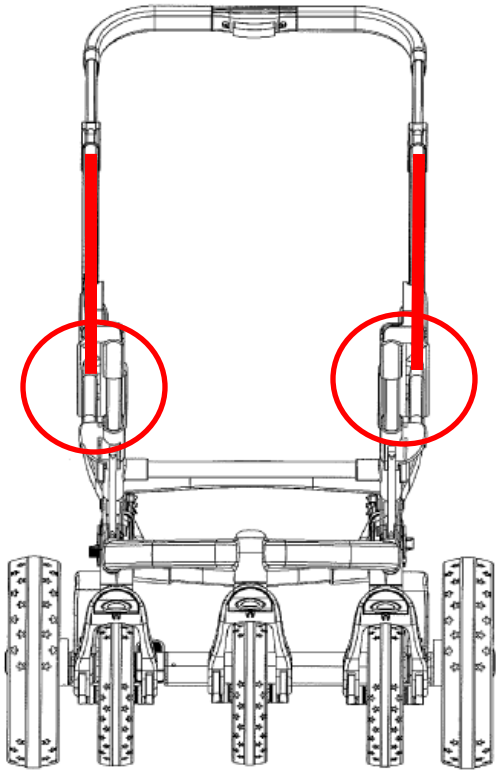

FIG. 2

99. The '459 Patent discloses or renders obvious "wherein the stroller seat support portion positioned at the first vertical position and the front seat attachment at the second vertical position create an inline descending configuration of the rear stroller seat and the front stroller seat":

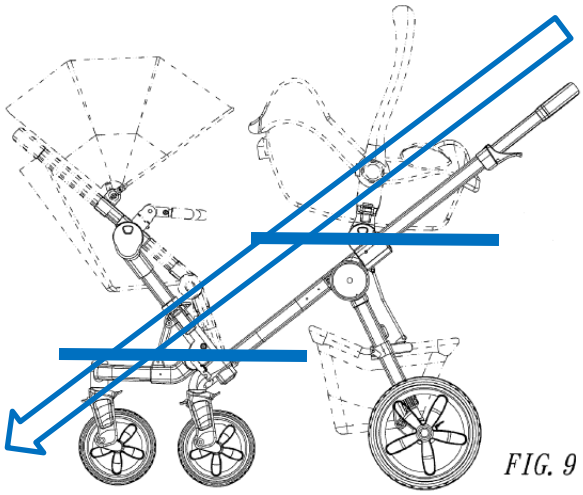

FIG. 9

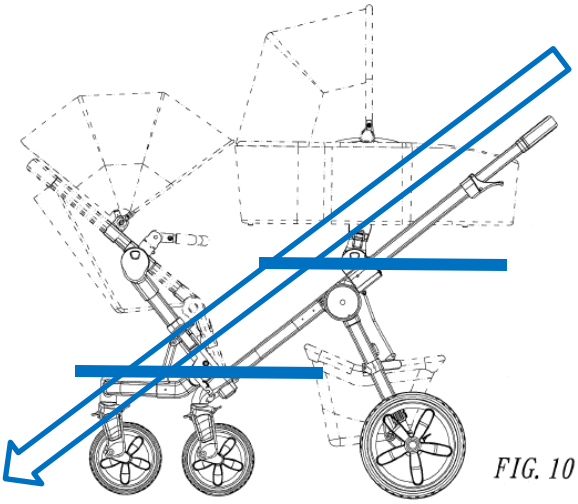

FIG. 10

100. As a result of Baby Jogger's actions and statements, including the filing of this action, an actual controversy now exists between UPPAbaby and Baby Jogger regarding the validity of the asserted claims of the '231 Patent.

101. UPPAbaby is entitled to a declaration that any and all asserted claims of the '231 Patent are invalid.

**COUNT V**

**Declaratory Judgment of Invalidity of the '729 Patent**

102. UPPAbaby repeats and realleges each and every allegation in Paragraphs 1-101 of UPPAbaby's Counterclaims and Demand for Jury Trial, as if fully set forth herein.

103. The asserted claims of the '729 Patent are invalid under at least 35 U.S.C. §§ 102 and/or 103.

104. Independent claim 1 of the '729 Patent recites as follows:

> 1. A stroller system for supporting a front stroller seat and a rear stroller seat, the system comprising:
>
> a pair of rear wheels;
>
> a pair of front wheels;

a frame including a handle portion, a rear wheel support portion, a front wheel support portion, and a folding mechanism connecting the front wheel support portion and the handle portion in both an unfolded configuration and in a folded configuration,

wherein the frame includes a stroller seat support portion positioned at a first vertical position adjacent the handle portion, and wherein the front wheel support portion and the handle portion are parallel when the frame is in the unfolded configuration; and

a front seat attachment configured for attachment to the front wheel support portion at a second vertical position substantially lower than the first vertical position,

wherein the front seat attachment is configured to releasably connect to and support the front stroller seat in either a forward-facing configuration or a backward-facing configuration,

wherein the front seat attachment is configured to support the front stroller seat substantially over the front wheels so that a center of gravity of the stroller system is between the front wheels and the rear wheels;

wherein the rear wheel support portion extends diagonally relative to the front wheel support portion when the frame is in the unfolded configuration, and the rear wheel support portion is disposed adjacent to both the front wheel support portion and the handle portion when the frame is in the folded configuration; and

wherein the stroller seat support portion positioned at the first vertical position and the front seat attachment at the second vertical position create an inline descending configuration of the rear stroller seat and the front stroller seat.

105. For example, and without limitation, the '459 Patent anticipates or renders obvious claim 1 of the '729 Patent.

106. The '459 Patent discloses or renders obvious "A stroller system for supporting a front stroller seat and a rear stroller seat, the system comprising":

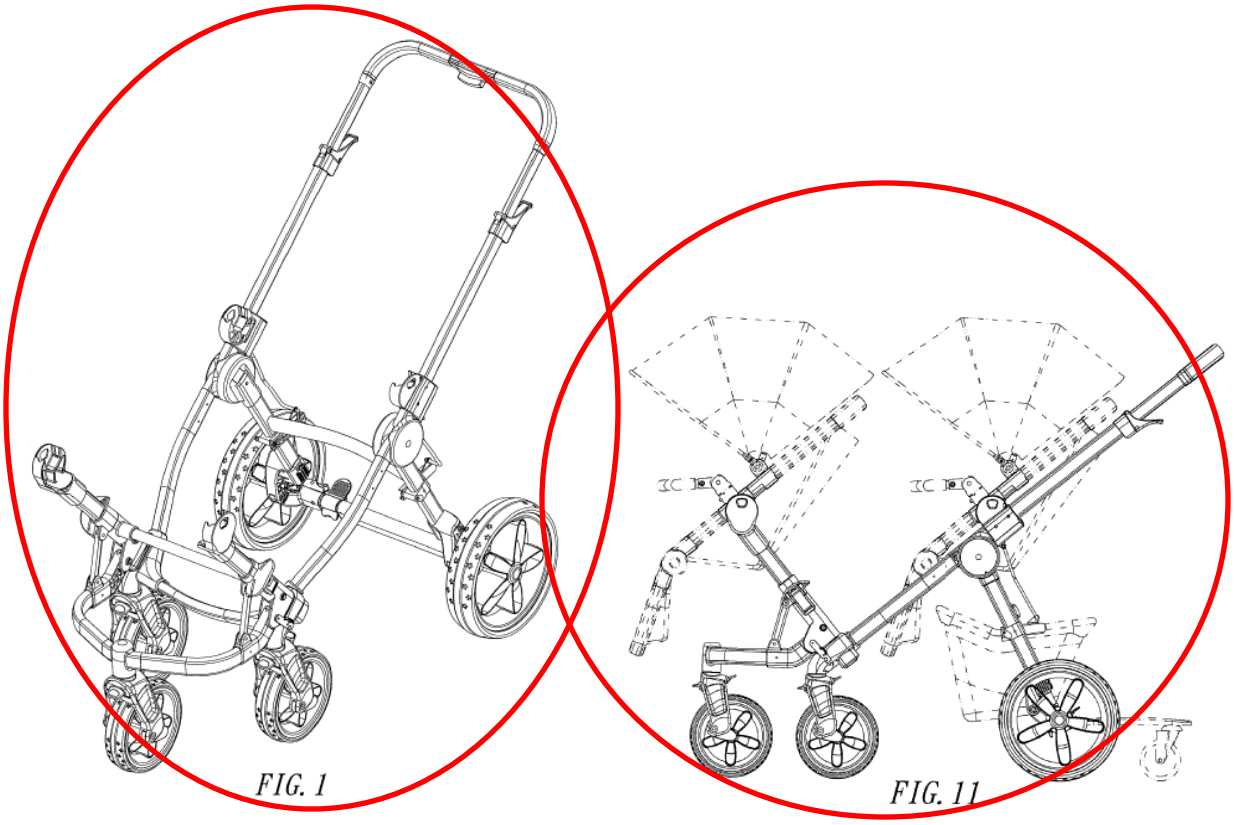


107. The '459 Patent discloses or renders obvious "a pair of rear wheels":

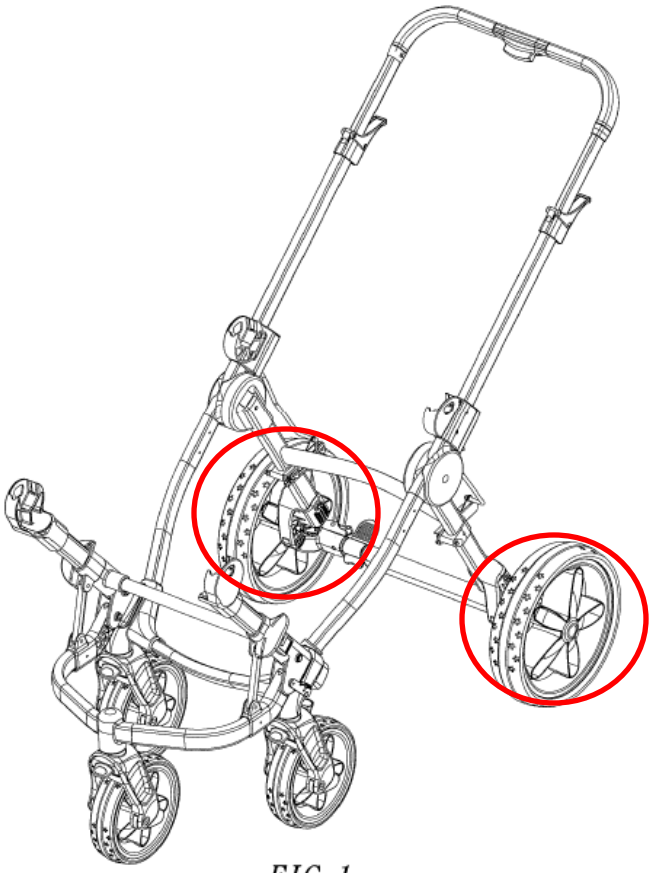

FIG. 1

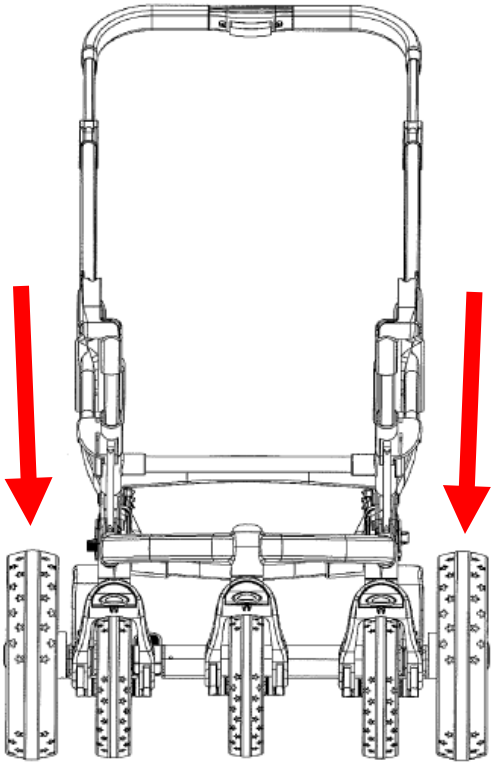

FIG. 2

108. The '459 Patent discloses or renders obvious "a pair of front wheels":

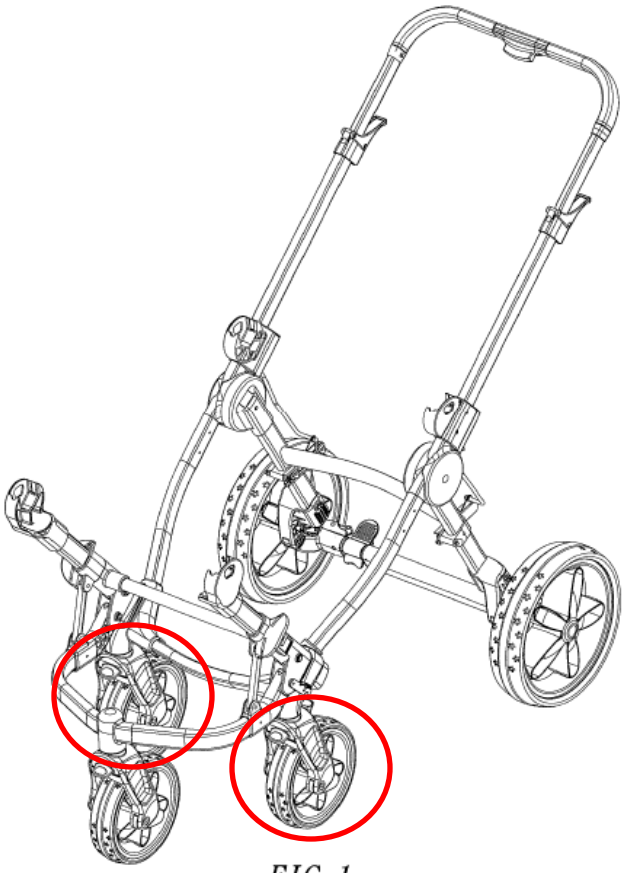

FIG. 1

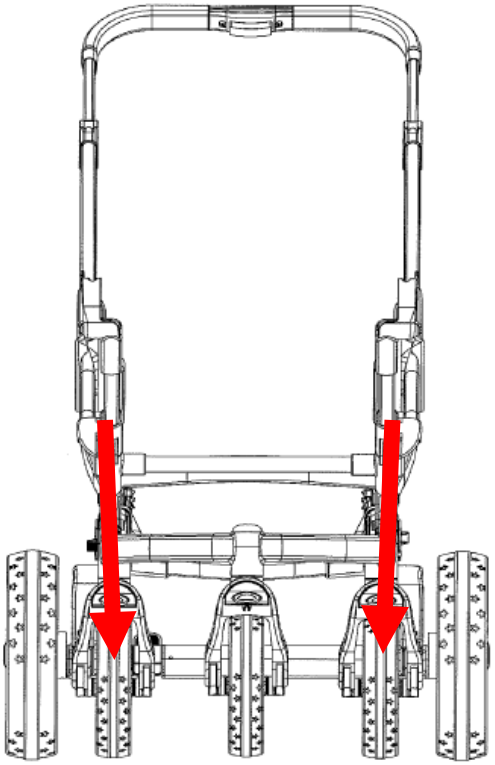

FIG. 2

109. The '459 Patent discloses or renders obvious "a frame including a handle portion, a rear wheel support portion, a front wheel support portion, and a folding mechanism connecting the front wheel support portion and the handle portion in both an unfolded configuration and in a folded configuration":

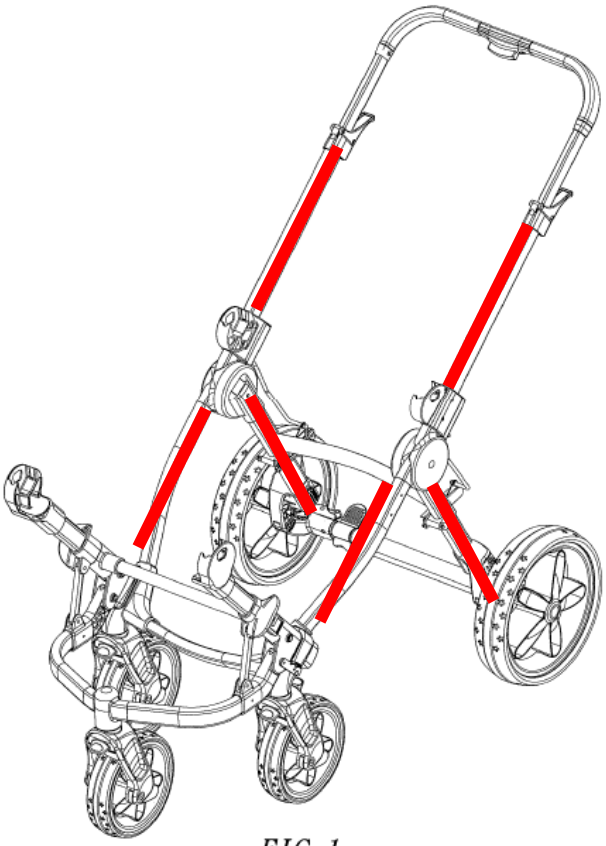

FIG. 1

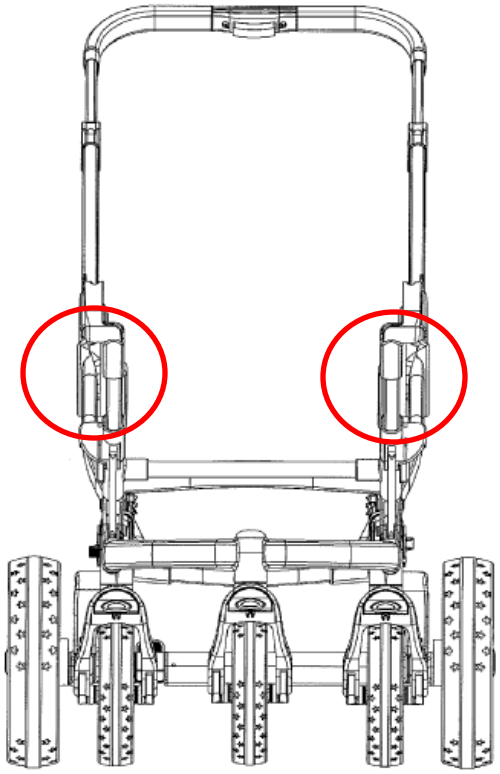

FIG. 2

110. The '459 Patent discloses or renders obvious "wherein the frame includes a stroller seat support portion positioned at a first vertical position adjacent the handle portion, and wherein the front wheel support portion and the handle portion are parallel when the frame is in the unfolded configuration; and":

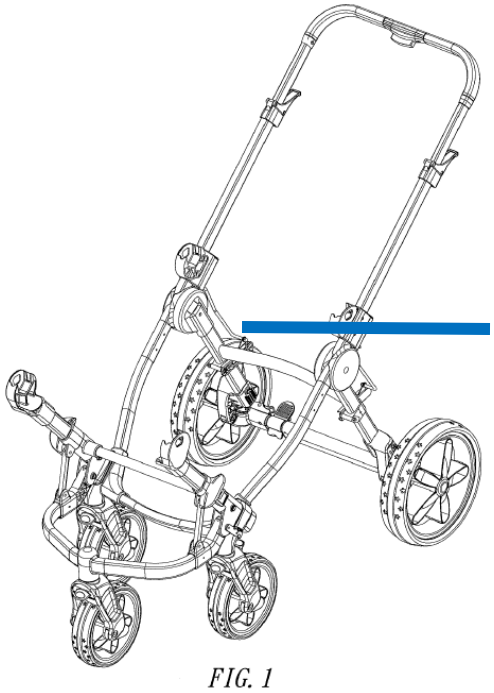

FIG. 1

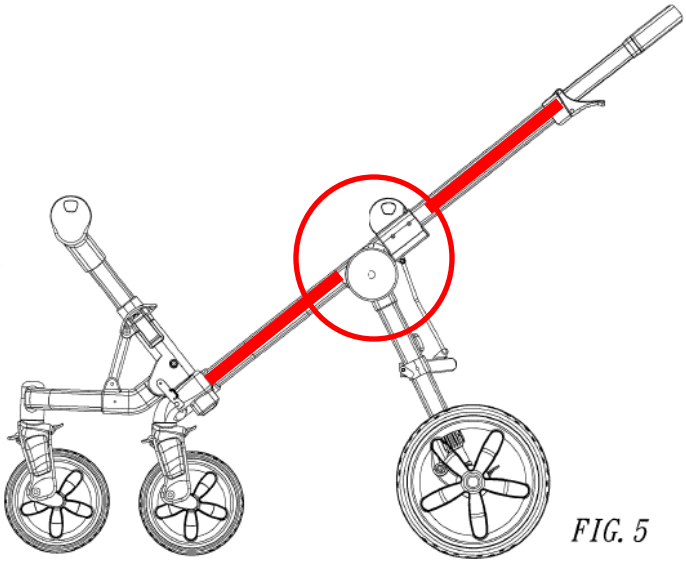

FIG. 5

111. The '459 Patent discloses or renders obvious "a front seat attachment configured for attachment to the front wheel support portion at a second vertical position substantially lower than the first vertical position":

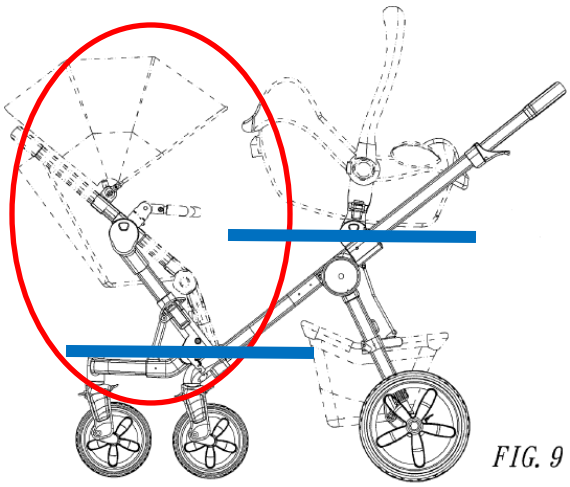

FIG. 9

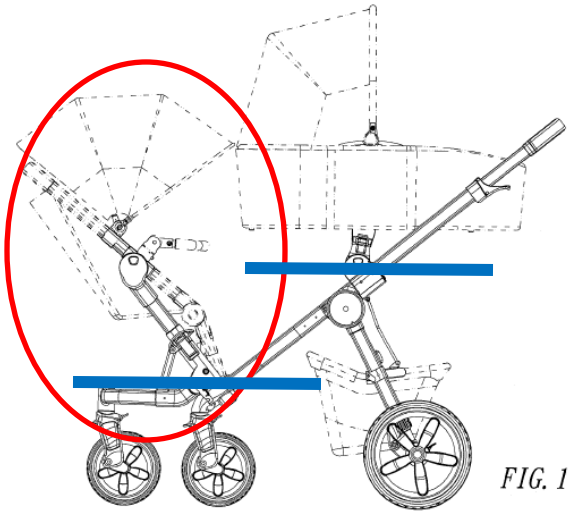

FIG. 10

112. The '459 Patent discloses or renders obvious "wherein the front seat attachment is configured to releasably connect to and support the front stroller seat in either a forward-facing configuration or a backward-facing configuration":

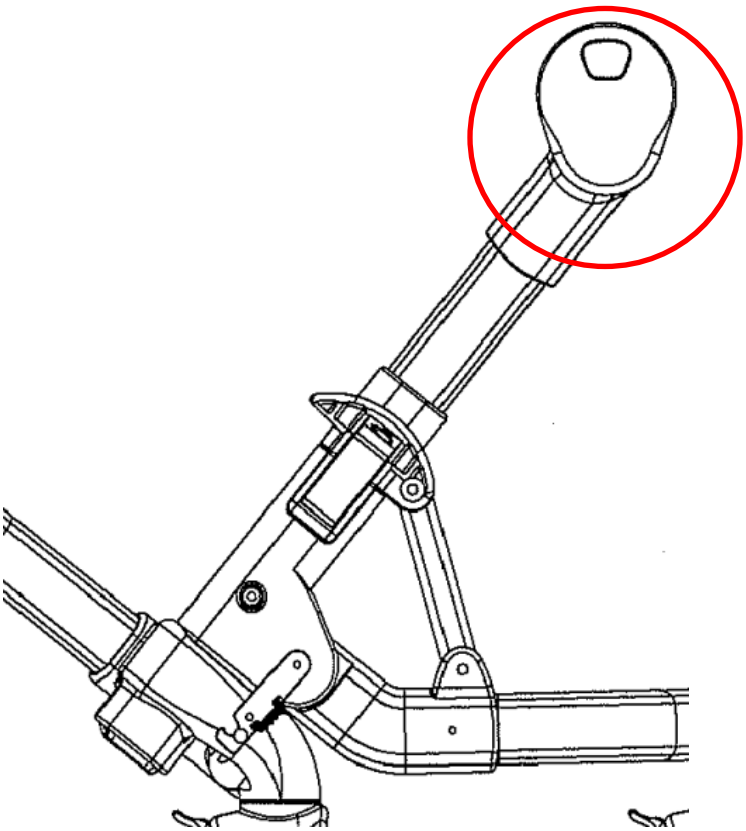

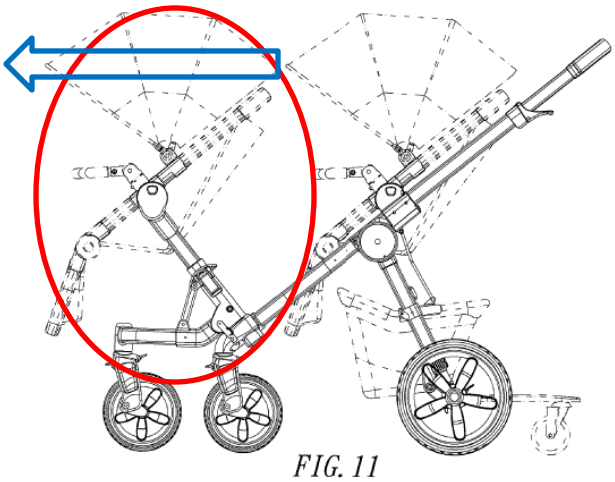

FIG. 11

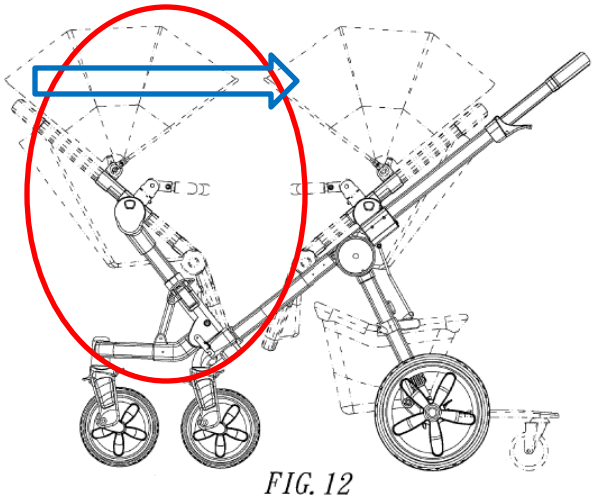

FIG. 12

113. The '459 Patent discloses or renders obvious "wherein the front seat attachment is configured to support the front stroller seat substantially over the front wheels so that a center of gravity of the stroller system is between the front wheels and the rear wheels":

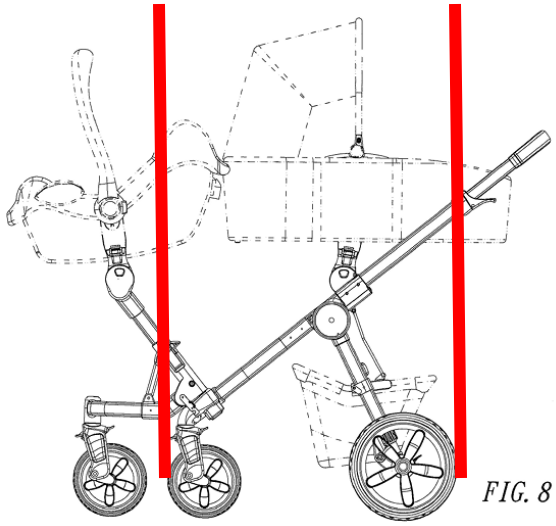

FIG. 8

FIG. 13

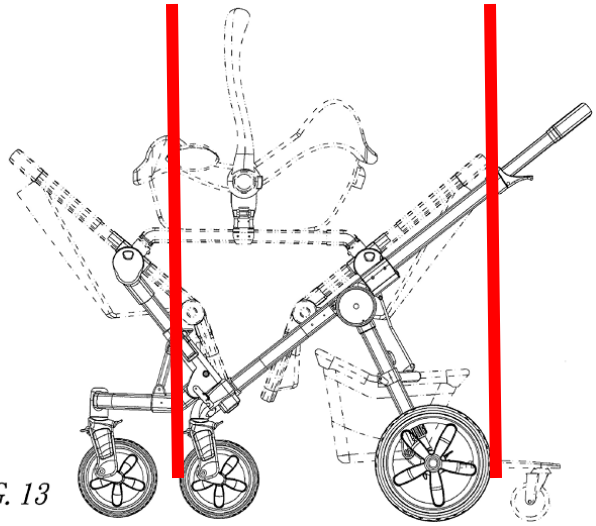

114. The '459 Patent discloses or renders obvious "wherein the rear wheel support portion extends diagonally relative to the front wheel support portion when the frame is in the unfolded configuration, and the rear wheel support portion is disposed adjacent to both the front wheel support portion and the handle portion when the frame is in the folded configuration; and":

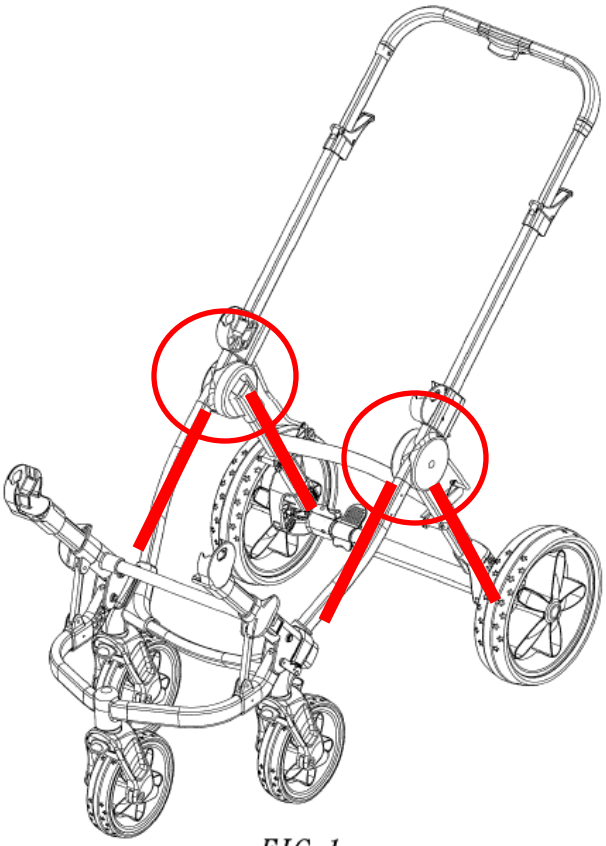

FIG. 1

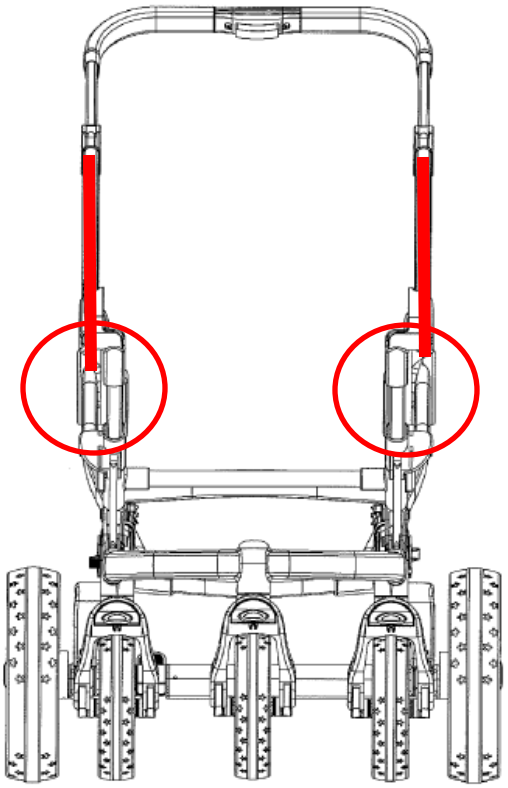

FIG. 2

115. The '459 Patent discloses or renders obvious "wherein the stroller seat support portion positioned at the first vertical position and the front seat attachment at the second vertical position create an inline descending configuration of the rear stroller seat and the front stroller seat":

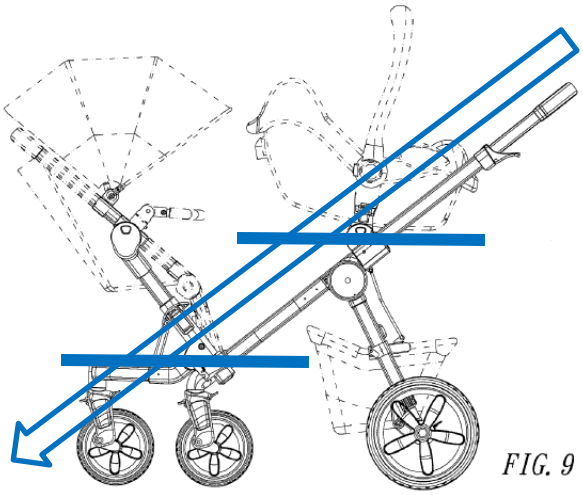

FIG. 9

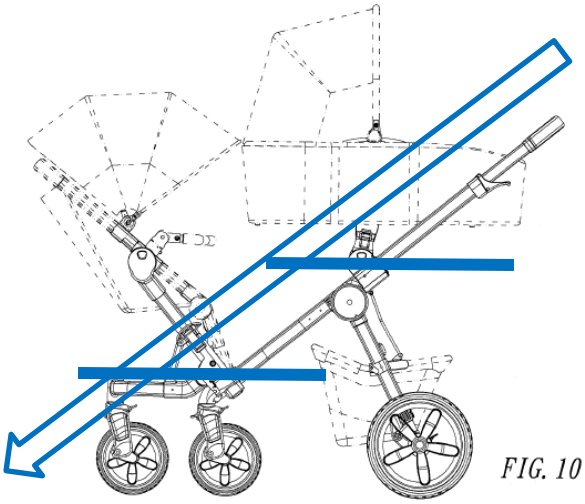

FIG. 10

116. As a result of Baby Jogger's actions and statements, including the filing of this action, an actual controversy now exists between UPPAbaby and Baby Jogger regarding the validity of the asserted claims of the '729 Patent.

117. UPPAbaby is entitled to a declaration that any and all asserted claims of the '729 Patent are invalid.

**EXCEPTIONAL CASE DETERMINATION**

118. UPPAbaby repeats and realleges each and every allegation in Paragraphs 1-117 of UPPAbaby's Counterclaims and Demand for Jury Trial, as if fully set forth herein.

119. This case is exceptional under 35 U.S.C. § 285.

**DEMAND FOR JURY TRIAL**

120. Pursuant to Rule 38 of the Federal Rules of Civil Procedure, UPPAbaby respectfully requests a trial by jury of any issue so triable by right.

**PRAYER FOR RELIEF**

WHEREFORE, UPPAbaby respectfully requests that Baby Jogger take nothing on its claims against UPPAbaby, that the Court enter judgment in favor of UPPAbaby and against Baby

Jogger, and that the Court award UPPAbaby its costs, expenses, and reasonable attorney's fees in this action, including as follows:

A. A judgment in favor of UPPAbaby denying Baby Jogger all relief requested in its First Amended Complaint in this action and dismissing Baby Jogger's First Amended Complaint with prejudice;

B. A judgment in favor of UPPAbaby on all of its Counterclaims;

C. A declaration that the Asserted Patents (U.S. Patent Nos. 8,955,869; 9,403,550; 11,192,568; 11,505,231; 11,878,729) are invalid, unenforceable, or both;

D. A declaration that this case is exceptional under 35 U.S.C. § 285 and an award to UPPAbaby of its reasonable costs and expenses of litigation, including attorneys' fees and expert witness fees, with pre-and post-judgment interest; and

E. Such other and further relief as this Court deems just and proper.

Dated: October 11, 2024

Respectfully submitted,

By:

/s/ *Andrea B. Reed*

Craig R. Smith (Mass BBO # 636723)
Andrea B. Reed (Mass BBO # 672321)
Kevin M. Eckert (*pro hac vice*)
(VA # 89140, DCBN 1046716)
**LANDO & ANASTASI, LLP**
60 State Street, 23rd Floor
Boston, MA 02109
Tel: (617) 395-7000
Email: csmith@lalaw.com
areed@lalaw.com
keckert@lalaw.com

***Attorneys for Defendant Monahan Products, LLC d/b/a UPPAbaby***



EVENFLO ET AL. EX1063

**CERTIFICATE OF SERVICE**

I certify that on October 11, 2024, I electronically filed the foregoing with the Clerk of the Court using the CM/ECF system, which automatically sends email notification of such filing to registered participants. Any other counsel of record will receive the foregoing via e-mail in PDF format.

/s/ *Andrea B. Reed*
Andrea B. Reed



EVENFLO ET AL. EX1063