US006575746B2

(12) **United States Patent**
Hirsch et al.

(10) **Patent No.: US 6,575,746 B2**
(45) **Date of Patent: *Jun. 10, 2003**

(54) **INTRAORAL DEVICE AND METHOD OF USING THE SAME**

(76) Inventors: **James A. Hirsch**, 3758 Brenner Dr., Santa Barbara, CA (US) 93105; **Thomas R. Hirsch**, 3945 Ridgemont Dr., Malibu, CA (US) 90265

(*) Notice: Subject to any disclaimer, the term of this patent is extended or adjusted under 35 U.S.C. 154(b) by 0 days.

This patent is subject to a terminal disclaimer.

(21) Appl. No.: **10/006,732**

(22) Filed: **Nov. 15, 2001**

(65) **Prior Publication Data**

US 2002/0039715 A1 Apr. 4, 2002

Related U.S. Application Data

(63) Continuation of application No. 09/777,491, filed on Feb. 5, 2001, now Pat. No. 6,338,627, which is a continuation of application No. 09/490,923, filed on Jan. 25, 2000, now abandoned, which is a continuation of application No. 09/193,916, filed on Nov. 17, 1998, now Pat. No. 6,022,214.

(51) **Int. Cl.**[7] **A61C 17/06**

(52) **U.S. Cl.** **433/93**; 433/140

(58) **Field of Search** 433/29, 93, 91, 433/140

(56) **References Cited**

U.S. PATENT DOCUMENTS

1,122,086	A		12/1914	Dunlap	
3,881,254	A	*	5/1975	Epstein	
4,167,814	A	*	9/1979	Schubert	
4,259,067	A	*	3/1981	Nelson	433/93
4,495,945	A		1/1985	Liegner	
4,592,344	A		6/1986	Scheer	
4,643,172	A		2/1987	Taff et al.	
4,802,851	A		2/1989	Rhoades	
4,865,545	A	*	9/1989	La Rocca	433/96
4,975,057	A		12/1990	Dyfvermark	
4,992,046	A	*	2/1991	Sharp	433/93
4,996,976	A		3/1991	Nakagawa	
5,009,595	A		4/1991	Osborn	
5,071,347	A	*	12/1991	McGuire	433/97
5,078,602	A	*	1/1992	Honoshofsky	433/91
5,152,686	A		10/1992	Duggan et al.	
5,232,362	A		8/1993	Kanas	
5,281,134	A		1/1994	Schultz	
5,462,435	A		10/1995	Young	433/140
5,513,986	A	*	5/1996	Feltham et al.	433/91
5,588,836	A		12/1996	Landis et al.	
5,762,496	A		6/1998	Albertsson et al.	
5,769,635	A		6/1998	Eldreth	
5,873,718	A	*	2/1999	Sullivan	433/93
6,022,214	A		2/2000	Hirsch et al.	
6,338,627	B2		1/2002	Hirsch et al.	

* cited by examiner

Primary Examiner—Ralph A. Lewis
(74) *Attorney, Agent, or Firm*—Procopio, Cory, Hargreaves & Savitch, LLP

(57) **ABSTRACT**

The present invention involves an intraoral illumination device and method for illuminating the interior cavity of a patient's mouth during a medical procedure. The illumination device includes a bite block adapted to be engaged by a patient's teeth for resting the patient's jaw during the medical procedure and fixing the bite block within the patient's mouth. An arcuate light dispersion piece is connected to the bite block so that, in use, the light dispersion piece is orientated in a rear, central part of the oral cavity of the patient's mouth so that dispersed light can be transmitted outward from the rear, central part of the oral cavity. A tongue and cheek retractor is adapted to retract and protect the patient's tongue and adjacent cheek tissue during the medical procedure. Multiple fluid evacuation channels are carried by the device and are adapted to communicate with the interior cavity of the patient's mouth for removing fluids from the oral cavity during the medical procedure.

17 Claims, 8 Drawing Sheets

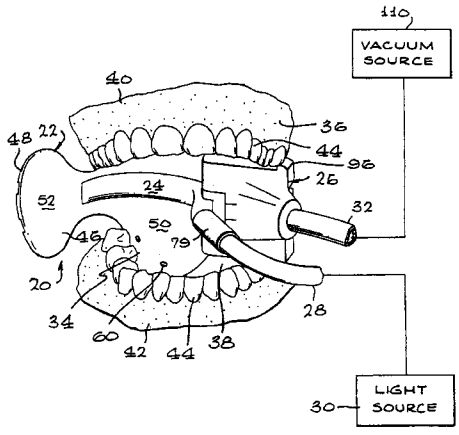

EX1018
Petitioner Ascentcare ('329 Patent)

FIG. 1

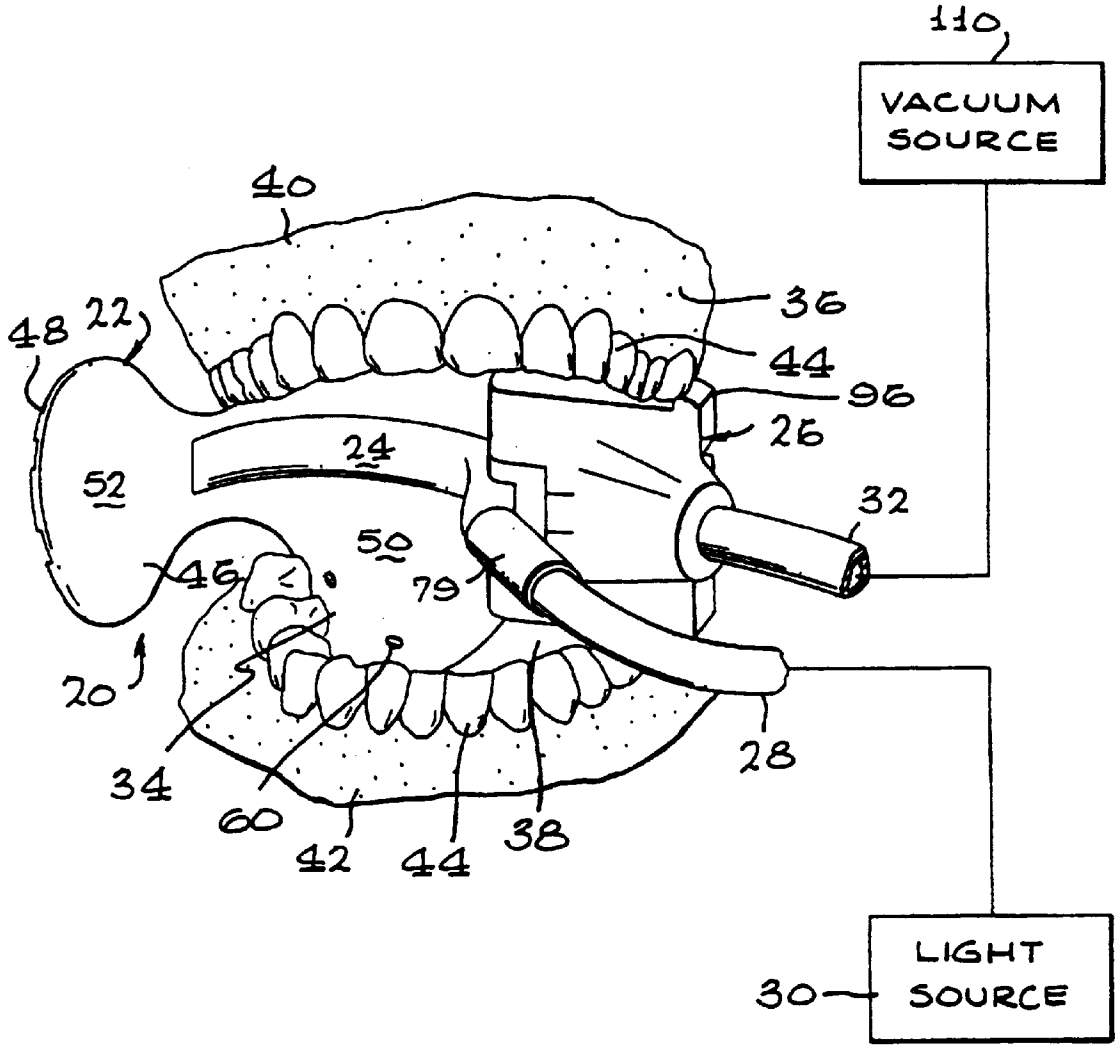
110
VACUUM SOURCE
40
36
48
22
44
96
26
24
52
32
50
46
79
20
34
60
42
44
38
28
LIGHT SOURCE
30

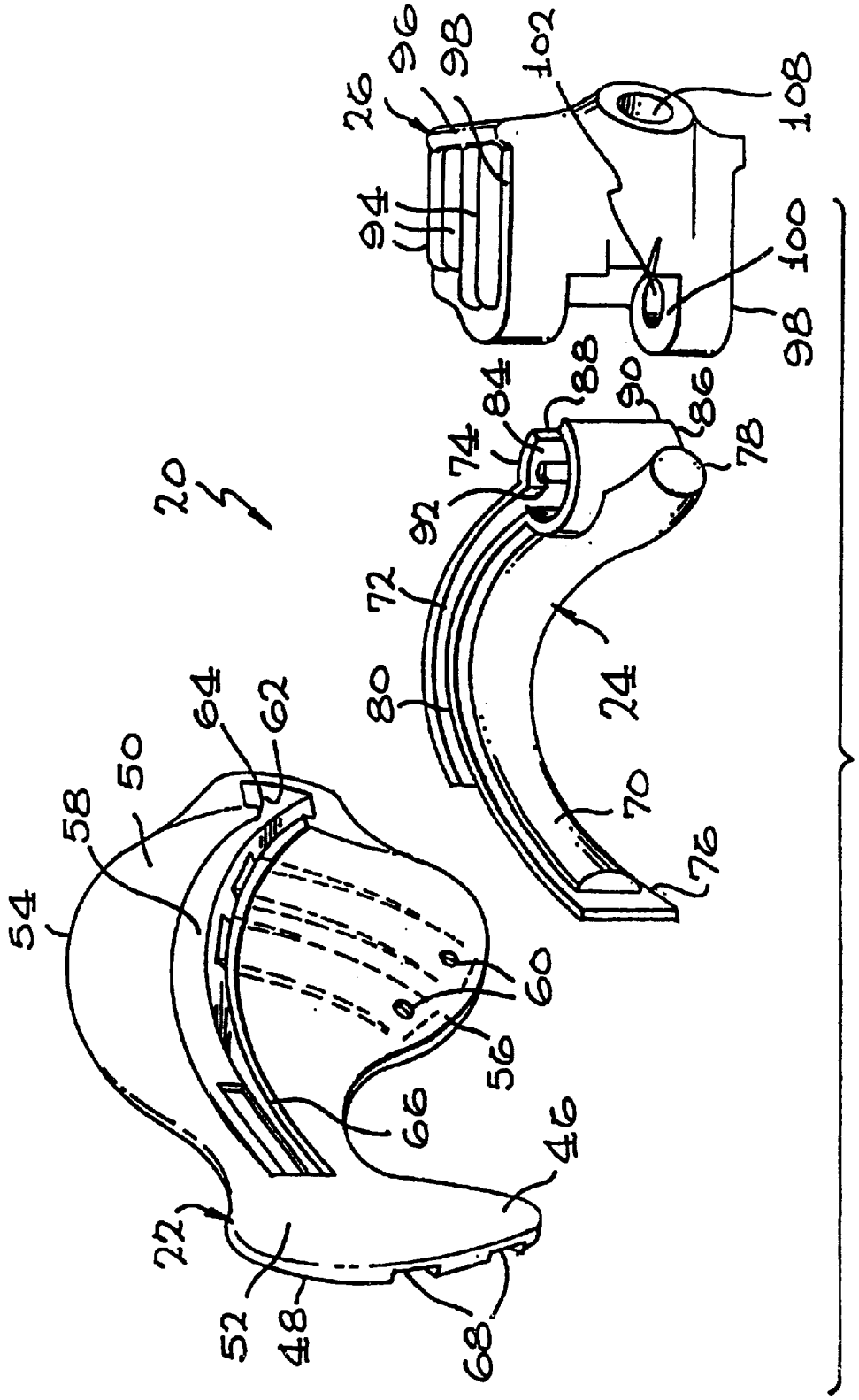
20
22
24
26
46
48
50
52
54
56
58
60
62
64
66
68
70
72
74
76
78
80
84
86
88
90
92
94
96
98
100
102
108

FIG. 2

FIG. 3

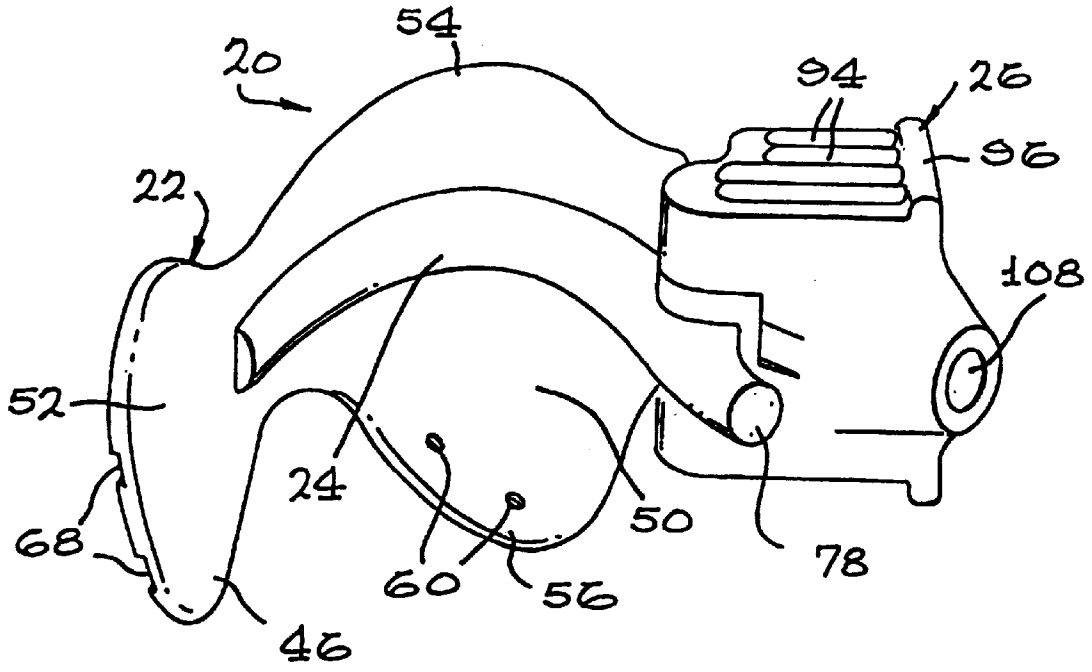
54
20
94
26
96
22
108
52
24
50
68
60
56
78
46

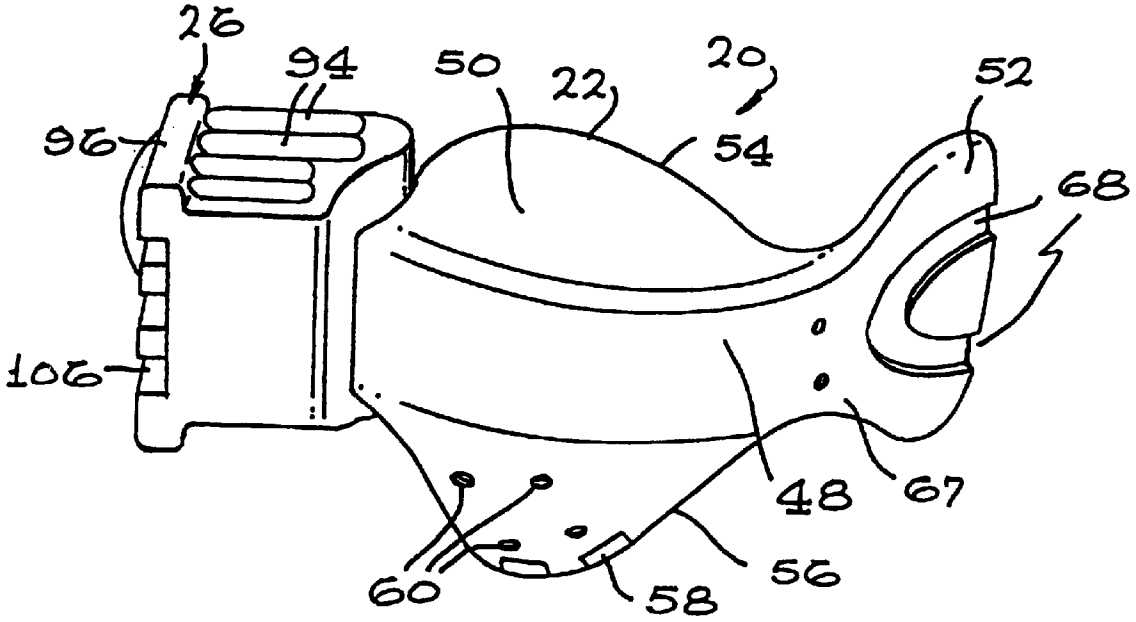
26
94
50
22
20
52
96
54
68
106
48
67
60
58
56

FIG. 4

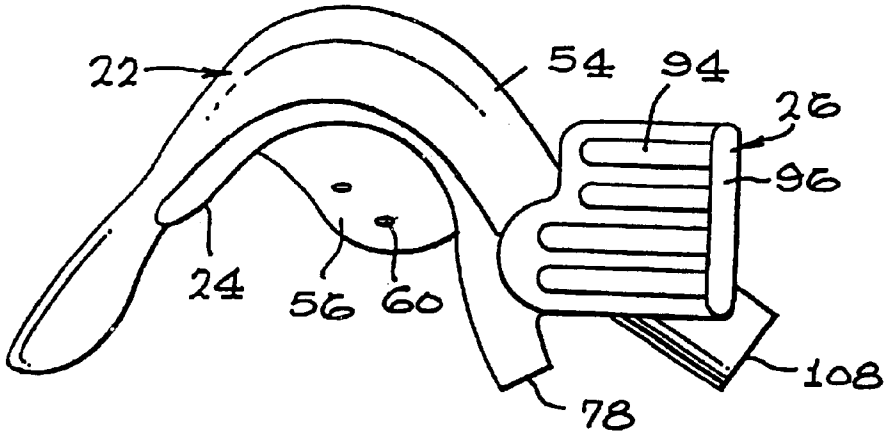

FIG. 5

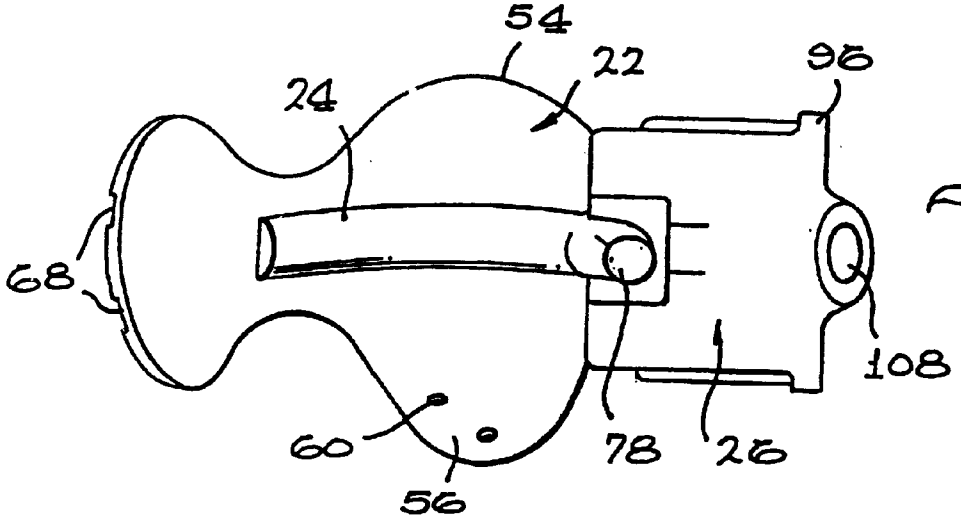

FIG. 6

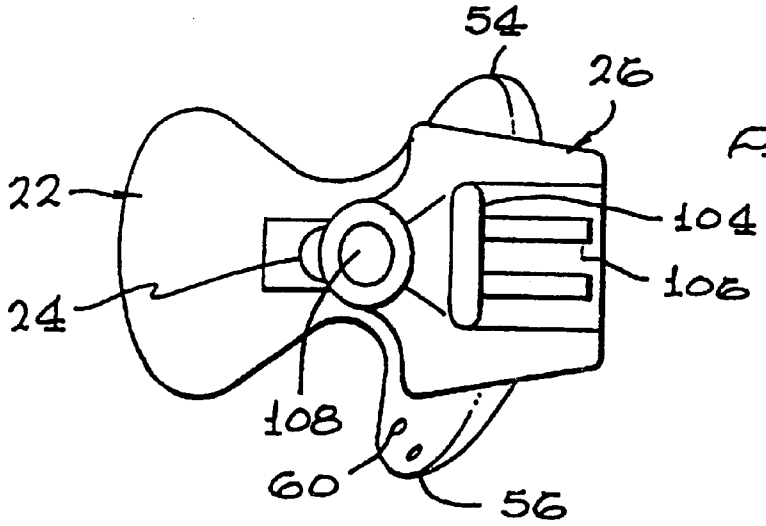

FIG. 7

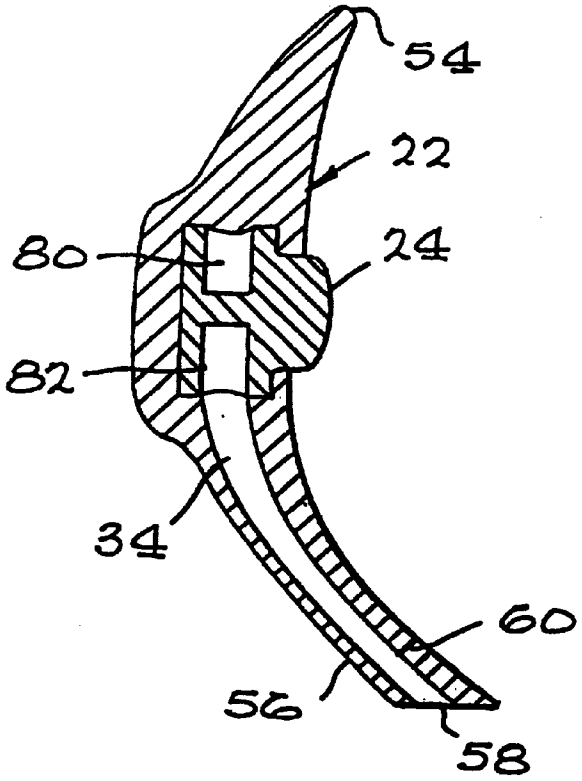

FIG. 8A

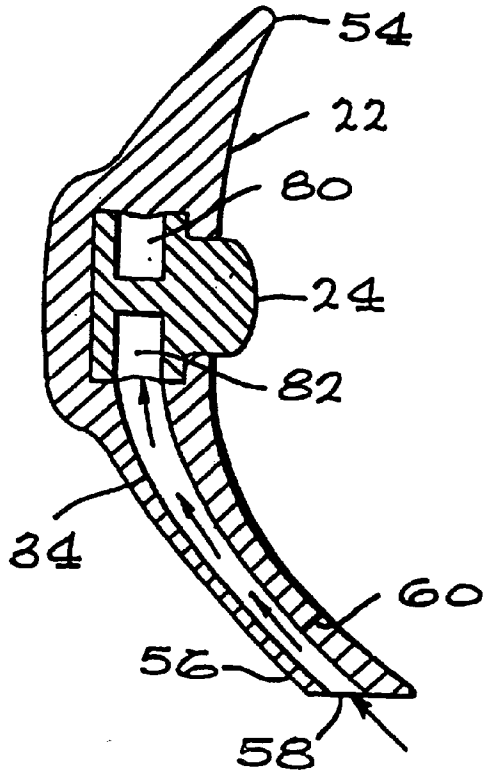

FIG. 8B

FIG. 9

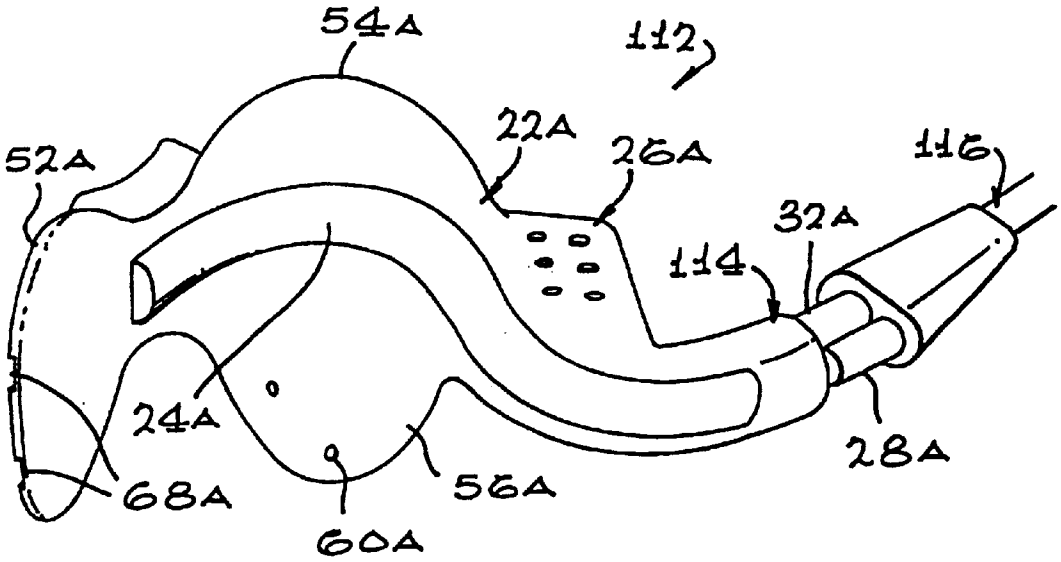

FIG. 10

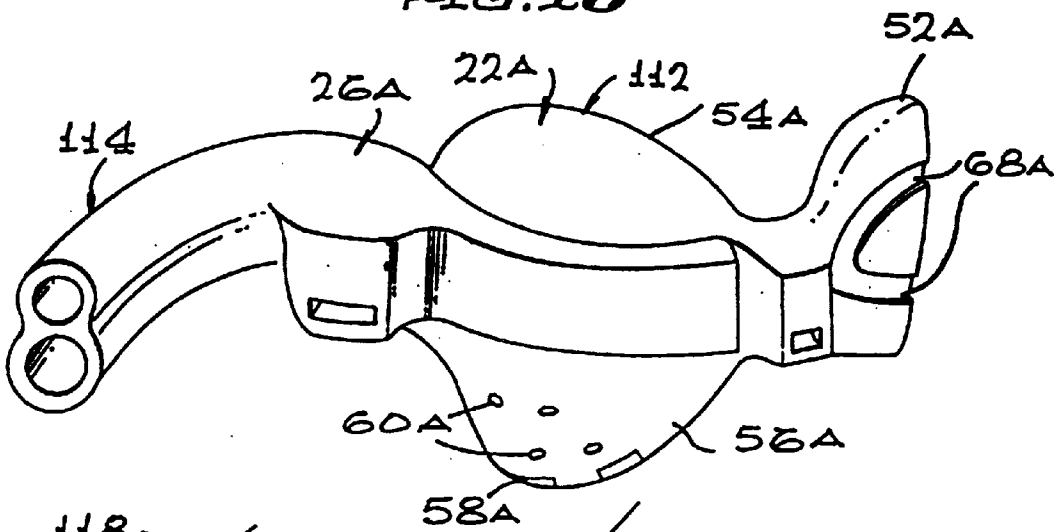

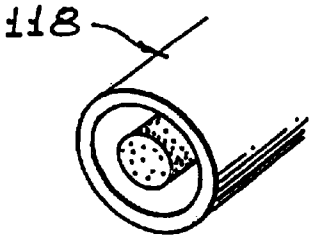

FIG. 11A

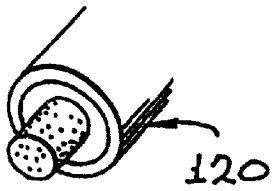

FIG. 11B

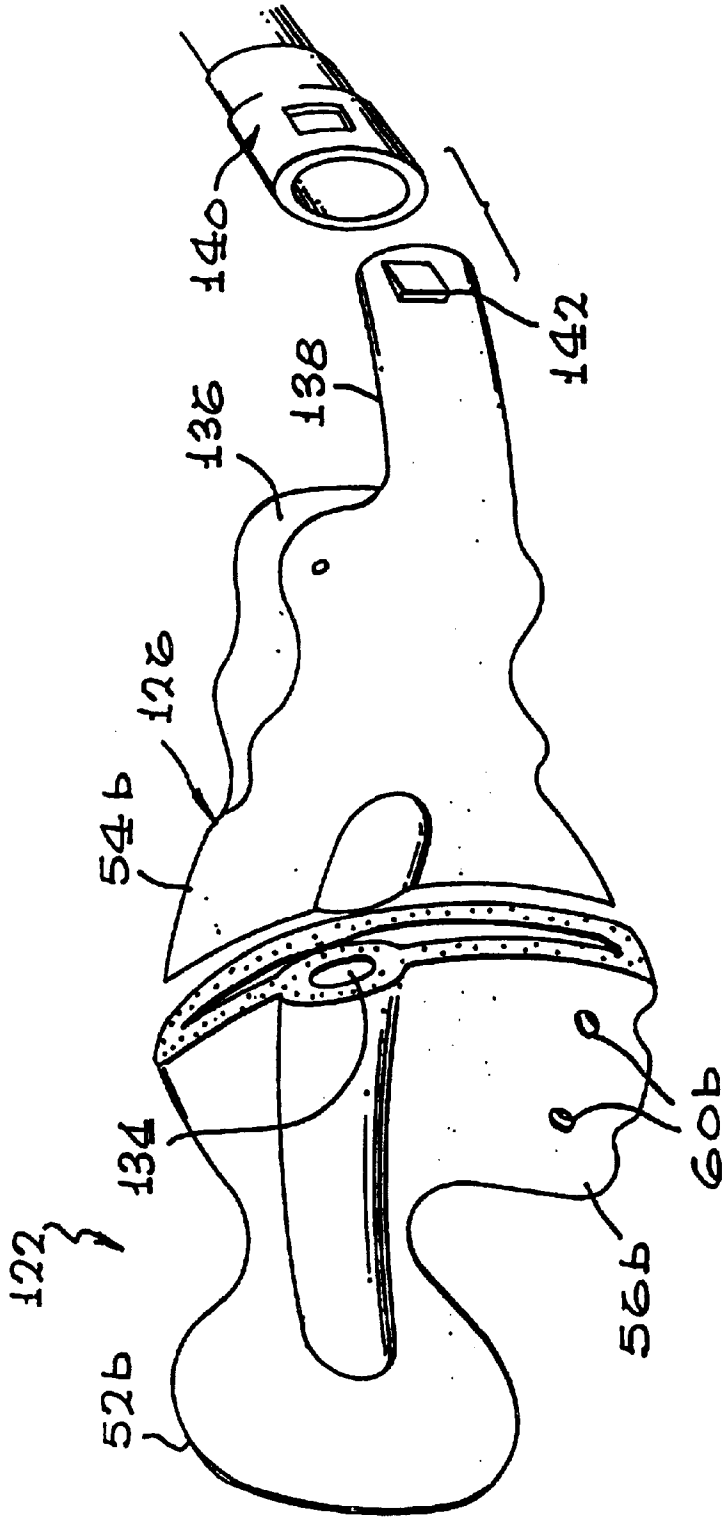

FIG. 12

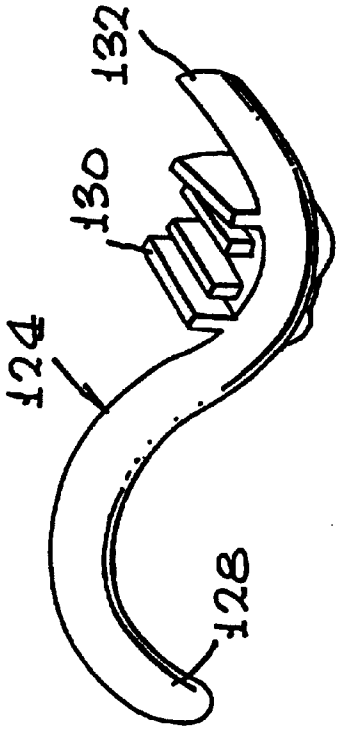

FIG. 13

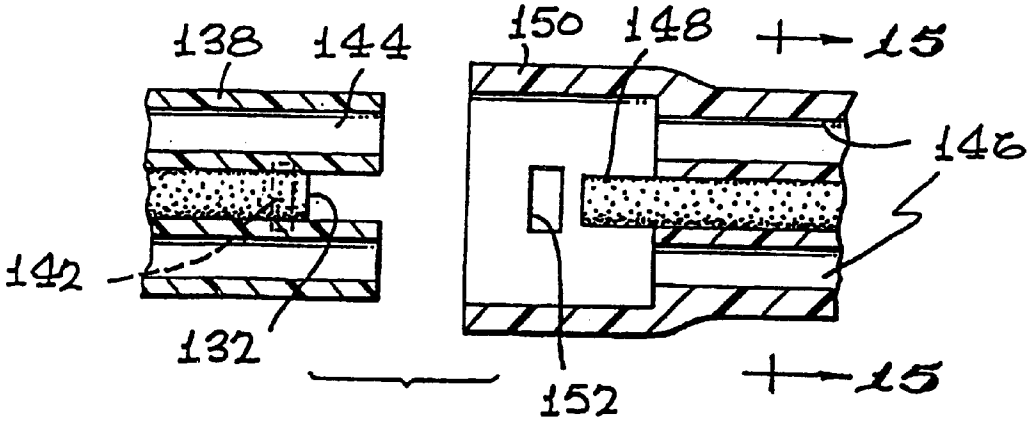

FIG. 14

FIG. 15

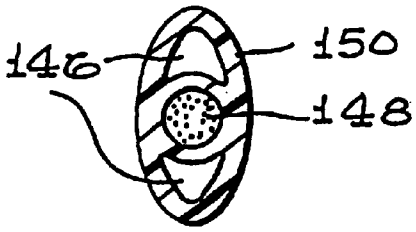

FIG. 16

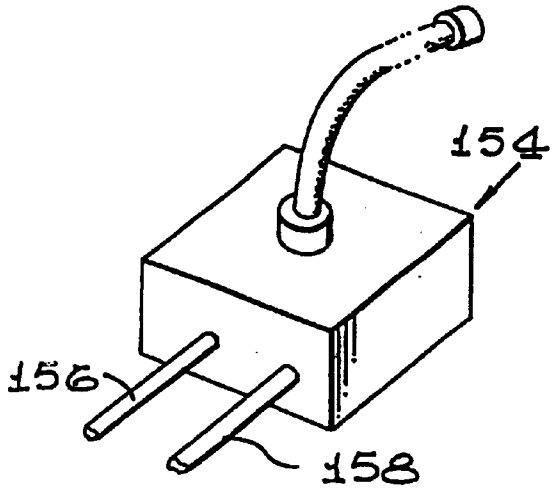

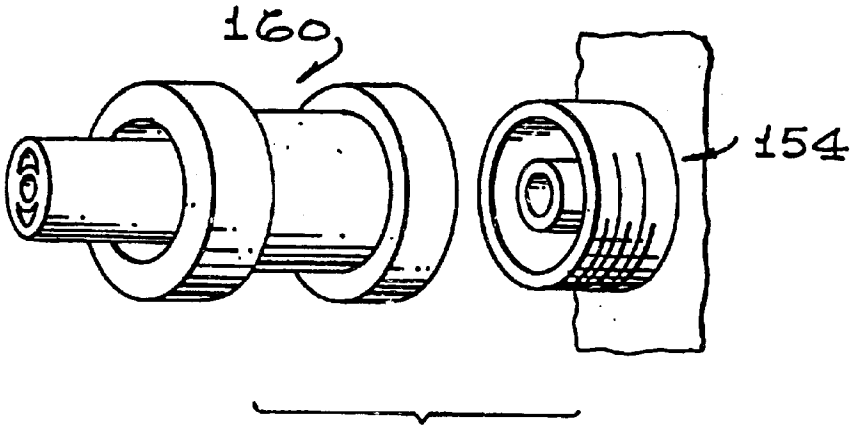

FIG. 17

INTRAORAL DEVICE AND METHOD OF USING THE SAME

This is a continuation of prior U.S. application Ser. No. 09/777,491, filed Feb. 5, 2001, now U.S. Pat. No. 6,338,627, which is a continuation of U.S. application Ser. No. 09/490,923, filed on Jan. 25, 2000, now abandoned, which is a continuation of U.S. application Ser. No. 09/193,916, filed on Nov. 17, 1998, which issued on Feb. 8, 2000 as U.S. Pat. No. 6,022,214, all of which are expressly incorporated herein by reference in their entireties.

FIELD OF THE INVENTION

The invention relates, in general, to dental appliances, and, in particular, to dental appliances for illuminating the mouth of a dental patient for examination and/or operative purposes.

BACKGROUND OF THE INVENTION

Illuminating the interior of a dental patient's mouth during dental examination and/or operation is difficult because the patient's mouth must be illuminated through a narrow opening, i.e. , the patient's mouth, and the dentist must work in close proximity to the mouth, often blocking the light source. Proper illumination is essential for dental examination and/or operation.

The oral cavity is typically illuminated by a focused light source mounted approximately two to three feet above a dental chair that the patient rests on. The light source is configured to direct light onto and into the patient's mouth. The amount of light entering the oral cavity using this type of lighting is somewhat limited due to the fact that the light source is remote from the patient's mouth. Additionally, the dentist or oral surgeon must often position oneself or his or her instruments between the light source and the patient's mouth to properly view the patient's mouth, blocking light from entering the mouth. The blocking of light casts an effective shadow in the patient's mouth or in areas of the patient's mouth such as certain teeth.

In order to inhibit this blocking or shadowing, fiber optic lighting has been incorporated into handheld dental instruments. Typically, one or two fiber optic strands extend longitudinally along the instrument and include a light outlet end configured to direct light towards the end of the instrument. However, this type of lighting has a number of drawbacks. Light is only directed on a limited area in the mouth and does not provide illumination for the entire oral cavity. Additionally, the presence of this type of lighting, typically as an add-on feature on the instrument interferes with the comfortable and proper use of the instrument. The fiber optic bundles also degrade over time because the fiber optics and instrument go through autoclaving numerous times. Components of the instrument, e.g., turbines, may be easily changed once degraded, but the fiber optic bundles can not.

Other devices have been designed specifically for illuminating a patient's teeth, but these devices suffer from any or all of the following drawbacks: inadequate illumination of the patient's teeth, and interference with other dental instruments used during the examination and/or operation.

SUMMARY OF THE INVENTION

The present invention is directed to an intraoral illumination device for illuminating the interior cavity of a patient's mouth. The illumination device includes a bite

block, or piece, adapted to be engaged by a patient's teeth. A curved main body portion is to generally wrap around a rear part of the interior cavity of the patient's mouth with the bite piece at one end. A light dispersion piece extends along the curved main body portion to also generally wrap around the rear part of the interior cavity of the patient's mouth.

In a first separate aspect of the present invention, the main body portion and the dispersion piece are of similar composition to control dispersion of light in a similar manner.

In a second separate aspect of the present invention, the first separate aspect further includes a cheek retractor portion at the opposite side of the curved main body portion from the bite piece. The entire device may extend around the back of a patient's mouth with the bite piece between the patient's teeth and the cheek retractor lying against the cheek on the opposite side of the mouth. The device may be flexible and disposable.

In a third separate aspect of the present invention, the main body portion and the dispersion piece are of similar composition to control dispersion of light in a similar manner and at least one evacuation channel extends through the main body portion to be in fluid communication with the patient's mouth. The device may further include a vacuum source and a light source coupled with a light carrier/fluid evacuation tube connector that is in turn coupled with the light dispersion piece and the evacuation channel.

In a fourth separate aspect of the present invention, an intraoral device includes a body having a first wall made of translucent material and a second wall with the first and second walls having an outer surface and an inner surface. The inner surfaces of the first and second walls defining an interior cavity with evacuation holes extending from the outer surface to the interior cavity. A connector portion extends from the body to connect with a vacuum source. The connector portion also communicates with the evacuation holes.

In a fifth separate aspect of the present invention, combinations of any of the foregoing aspects are contemplated.

Other, more particular features and advantages of the inventions are set forth in the following detailed description and drawings.

BRIEF DESCRIPTION OF THE DRAWINGS

The drawings illustrate both the design and utility of preferred embodiments of the present invention, in which similar elements are referred to by common reference numbers, wherein:

FIG. **1** is a front perspective view of a preferred embodiment of the intraoral illumination device of the present invention shown inside a patient's mouth;

FIG. **2** is a front perspective view of the components of the intraoral illumination device illustrated in FIG. **1** in a disassembled state;

FIG. **3** is a front perspective view of the intraoral illumination device illustrated in FIG. **1**;

FIG. **4** is a rear perspective view of the intraoral illumination device illustrated in FIG. **1**;

FIG. **5** is a top plan view of the intraoral illumination device illustrated in FIG. **1**;

FIG. **6** is a front elevational view of the intraoral illumination device illustrated in FIG. **1**;

FIG. **7** is an end view of the intraoral illumination device illustrated in FIG. **1**;

FIGS. **8**A and **8**B are cross-sectional views of the intraoral illumination device illustrated in FIG. **1** and illustrate the evacuation of fluids through the evacuation system of the device;

FIG. **9** is a front perspective view of an alternative preferred embodiment of the intraoral illumination device;

FIG. **10** is a rear perspective view of the intraoral illumination device illustrated in FIG. **9**;

FIG. **11***a* is a partial perspective view of an alternative embodiment of an integrated light carrier and vacuum tube connector;

FIG. **11***b* is a partial perspective view of an alternative embodiment of an integrated light carrier and vacuum tube that the integrated light carrier and vacuum tube connector illustrated in FIG. **11** may be connected with;

FIG. **12** is a front perspective view of an alternative preferred embodiment of the intraoral illumination device and shows the intraoral illumination device in conjunction with a preferred embodiment of a multilumen tube;

FIG. **13** is a rear, top perspective view of a preferred embodiment of a light dispersion piece that may be used with the intraoral illumination device illustrated in FIG. **12**;

FIG. **14** is a cross sectional view of a connection section of the intraoral illumination device and an end portion of the multi-lumen tube;

FIG. **15** is a cross sectional view of the multi-lumen tube taken along lines **15**—**15** of FIG. **14**;

FIG. **16** is a perspective view of an embodiment of a transition mechanism that may be used to transition a separate light carrier and vacuum tube into the single multi-lumen tube; and

FIG. **17** is perspective view of an embodiment of a connector that may be used to couple the transition mechanism to the multi-lumen tube.

DESCRIPTION OF THE PREFERRED EMBODIMENTS

With reference to FIGS. **1** and **2**, a preferred embodiment of an intraoral illumination device, indicated generally by the reference numeral **20**, will now be described. The intraoral illumination device **20** generally includes a tongue and cheek retractor **22**, a dispersion piece **24**, and a bite block or piece **26**. The tongue and cheek retractor **22** is a disposable piece, and the dispersion piece **24** and bite piece are sterilizable for reuse. The dispersion piece **24** is coupled to a light carrier such as a fiber optic bundle **28** and extraoral light source **30** for illuminating the dispersion piece **24**. A fluid evacuation tube **32** is in communication with the bite block **26** and a fluid evacuation system **34** of the device **20** for evacuating fluids from a patient's mouth **36**.

The intraoral illumination device **20** will now be described generally in use. The patient opens his or her mouth **36** and a health care provider inserts the device **20** into an intraoral cavity **38** of the patient's mouth **36** between the patient's upper jaw **40** and lower jaw **42**. The patient rests his or her jaws **40**, **42** during the process to be performed by gently biting on the bite block **26** with his or her rear teeth **44**. To help isolate the area of the mouth **36** being worked on and protect the patient's mouth from being injured by the dental tools, the tongue and cheek retractor **22** urges the patient's cheek and tongue away from the area of isolation. Fluids produced in the patient's mouth **36** during the process are removed through the fluid evacuation system **34** of the device **20** and vacuum tube **32**. Light transmitted through the light carrier **28** to the dispersion piece **24** is dispersed outward from the dispersion piece **24**, towards the front of the patient's mouth, from a rear, central part of the intraoral cavity **38** flooding the patient's mouth with light. Illuminating the area of interest in the patient's mouth in this manner eliminates the aforementioned problems with blocked light or shadowing.

Although this invention has been described in connection with illuminating, isolating, and removing fluids from a patient's mouth for dentistry, it will be readily understood by those skilled in the art how the present invention may have other mouth-related applications where illumination in the mouth is required other than dentistry such as, but not by way of limitation, oral surgery.

With reference to FIGS. **1**–**7**, each of the components of the device **20** will now be described.

The tongue and cheek retractor **22** is made of a single molded piece of soft, flexible, biocompatible material such as Pebax, santoprene, or a molded vinyl material. However, it will be readily understood by those skilled in the art that other soft, flexible materials could be used. The tongue and cheek retractor **22** is preferably produced by a gas-assist injection molding process in order to produce the internal vacuum channels described below. However, it will be readily understood by those skilled in the art that other molding processes such as an injection molding process could also be used. As discussed in more detail below, the tongue and cheek retractor **22** may be a separate piece that can be easily added to or removed from the dispersion piece **24**. The tongue and cheek retractor **22** also may come in two different main configurations, depending on the side of the mouth being examined and/or operated on, i.e., left side, right side, and different sizes for different size and shaped mouths. The retractor **22** has an inner surface **46** and an outer surface **48**. The retractor **22** includes a curved main body portion **50** and a cheek retractor portion **52**.

The main body portion **50** includes an upper roof portion **54** configured to rest against the roof of the patient's mouth **36** during use and a lower tongue retractor portion **56** to keep the tongue protected and retracted. The lower tongue retractor portion **56** helps to isolate the area of interest in the mouth **36** and protect the tongue from instruments such as dental drills during the dental procedure. The tongue retractor portion **56** includes internal evacuation channels **58**. Evacuation holes **60** on both the inner surface **46** and outer surface **48** of the tongue retractor portion **56** communicate with the evacuation channels **58**. The evacuation channels **58** terminate at an upper part of the tongue retractor portion **56** at a main receiving channel **62**. The main receiving channel **62** includes a lip **64** for slidably receiving the dispersion piece **24**. A pair of shallow evacuation channels **66** extend along a portion of the main receiving channel **62**. Evacuation holes **66** allow communication of the evacuation channels **58** with the outer surface **48** of the retractor **22**.

The cheek retractor portion **52** has a curved, fish-tail shape and includes a pair of evacuation channels **68** exposed to the outer surface **48** of the retractor **22** that communicate with the evacuation channels **66**. The cheek retractor portion **52** protects adjacent cheek tissue during the dental procedure and helps to isolate the area of interest of the mouth **36** during the dental procedure by retracting the cheek tissue.

The dispersion piece **24** is an illumination member and is preferably made of a single, injection-molded piece of light-dispersive, biocompatible, sterilizable material. The dispersion piece **24** may be made of a rigid material such as acrylic or a flexible material such as a molded flexible urethane. However, it will be readily understood by those skilled in the art that other clear, flexible or rigid materials may be used. The dispersion piece **24** preferably has an arcuate, semi-circular shape and includes a generally U-shaped dispersion lens **70**, a fluid evacuation portion **72**, and a pivot portion **74**.

The dispersion lens **70** includes a flange **76** that is slidably received by the lip **64** of the main receiving channel **62** for attaching the dispersion piece **24** to the tongue and cheek retractor **22**. The dispersion lens **70** may have a composition that is varied, e.g., graduated, to control the amount of dispersion in different areas of the lens **70** and evenly distribute the overall rumination. This helps prevent "hot spots" in the dispersion lens **70**, i.e., areas of the lens **70** that emit a greater concentration of light. These "hot spots" make it difficult to for the health care provider to observe the patient's mouth. For example, in the area where the fiber optic bundle **28** connects with the dispersion lens **70**, there may be a less textured composition to inhibit the breaking up of internal reflections, and a progressively more textured composition as one approaches the opposite end of the lens **70**. It will be readily understood by those skilled in the art that the tongue and cheek retractor **22** or other covering may have a similar varied composition to control dispersion of light in a similar manner. The dispersion lens **70** optically communicates with the light carrier **28** through a stem **78** and a separate connector **79**. The light carrier **28** is preferably adapted to be directly connected to a commercially available illumination source as those found in most dentist offices or adapted to be connected to such sources through a connector or transition mechanism (not shown). Alternatively, the stem **78** and connector **79** may be a single integrated molded piece. The stem **78** serves as a light coupling between the light carrier **28** and dispersion lens **70**.

In use, light shines outward from the lens **70** and is scattered by the lens **70** to illuminate the patient's mouth **36**. When in place, the configuration of the device **20** causes light to be transmitted by the dispersion lens **70** from a central, rear part of the intraoral cavity, substantially between the patient's rear teeth **44**. The U-shaped dispersion lens **70** has a generally 180° arcuate shape. This generally 180° arcuate shape and the dispersional qualities of the lens **24** spreads the total area of illumination. Illuminating the mouth from the central, rear part of the intraoral cavity and the above-described attributes of the lens **24** eliminates shadows caused by a single-point light source, and shadows caused by the health care provider or equipment used by the health care provider. The intraoral illumination device **20** may replace or be used with dental instruments including fiber optic lighting.

The fluid evacuation portion **72** includes a first main evacuation channel **80** and a second main evacuation channel **82** for evacuating fluids from the device **20**.

The pivot portion **74** includes a first well **84** and a second well **86** that respectively communicate with the first and second main evacuation channels **80, 82**. A first recess **88** and second recess **90** are used to further communicate the wells **84, 86** with the fluid evacuation tube **32** in a manner to be described. Respective pivot pins **92** extend from each well **84, 86**.

The bite block **26** is made of a single piece of biocompatible, sterilizable material such as rubber. The bite block **26** may be formed by a compression molding process, a transfer molding process, a casting process, an injection molding process, or similar process. The bite block **26** includes ribs **94** and ridges **96** along opposite faces **98** of the bite block **26**. The ribs **94** and ridges **96** help to prevent the bite block **26** from slipping between the molar and bicuspid teeth **44** of the patient. When held or engaged between the patient's teeth, the bite block **26** functions to hold the dispersion lens **70** in a rear, central part of the interior cavity of the patient's mouth so that light can be transmitted outward therefrom for illuminating the interior cavity.

A pivot portion **100** of the bite block **26** includes opposite receiving grooves **102**. The receiving grooves **102** receive the pivot pins **92** of the dispersion lens **70** for pivotally connecting the dispersion piece **24** and tongue and cheek retractor **22** to the bite block **26**. This pivoting ability allows the health care provider to adjust, i.e., swivel, the dispersion piece **24** and tongue and cheek retractor **22** to accommodate patients with different arch widths.

The intraoral illumination device **20** may also come in different sizes and to accommodate different mouth sizes and shapes.

In an alternative embodiment of the device (FIGS. **9, 10, 12**), the dispersion piece **24** and bite piece **26** are not pivotally connected to each other, i.e., the connection is fixed. If the connection is fixed, it is especially important to provide the intraoral illumination device **20** in different configurations and sizes to accommodate the different mouth sizes and shapes. Likewise, if the device (FIGS. **9, 10, 12**) is disposable it is important to provide the device in different configurations and sizes to accommodate the different mouth sizes and shapes.

The bite block **26** includes an internal evacuation channel **104** in communication with the first and second main evacuation channels **80, 82** through the first and second recesses **88, 90**, respectively, for evacuation fluids from the patient's mouth **36** during the procedure. The recesses **88, 90** are sized to allow constant sealed communication of the internal evacuation channel **104** with the main evacuation channels **80, 82**, regardless of the pivoted position or articulation of the dispersion piece **24** and tongue and cheek retractor **22**. External evacuation channels **106** are located on the outside of the bite block **26** and are in communication with the internal evacuation channel **104** for further removal of fluids from the mouth **36**. Fluids are vacuumed from the internal evacuation channel **104** of the bite block **26** through an exit port **108**.

During use, the patient rests his or her jaws **40, 42** on the faces **98** of the bite block **26**, eliminating the need to strain one's jaw muscles to keep the mouth open. This resting of the jaws **40, 42** causes the bite block **26** to hold the dispersion piece **24** and tongue and cheek retractor **22** in the rear, central part of the oral cavity. The bite block **26** also serves as an evacuation exit for fluids and as a means for positioning and holding the dispersion piece **24** and tongue and cheek retractor **22** in the oral cavity.

Before inserting the intraoral illumination device **20** in the patient's mouth **36**, the heath care provider ensures that the intraoral illumination device **20** is configured for examining and/or operating on the specific area of the patient's mouth of interest, i.e., right side, left side. If the device **20** includes a replaceable tongue and cheek retractor **22**, the tongue and cheek retractor **22** used with the device **20** should be the proper configuration and size for the area of the patient's mouth of interest. A tongue and cheek retractor **22** specific to the size and area of the mouth of interest is added to the dispersion piece **24** by sliding the flange **76** of the dispersion lens **70** into the main receiving channel **62** of the tongue and cheek retractor **22**. Alternatively, if the device is disposable (FIGS. **9, 10, 12**), a device specific to the size and area of the mouth of interest is used. The device is then inserted into the patient's mouth **36** in the manner described above. If the provider desires to examine the opposite side of the patient's mouth **36**, the health care provider removes the device **20** from the patient's mouth, removes the tongue and cheek retractor **22** from the dispersion piece **24** by sliding the retractor **22** off of the flange **76**, flips the bite block **26** and

dispersion piece **24**, which are common for both sides of the mouth **36**, adds a new tongue and cheek retractor **22** configured for use with the opposite side of the mouth **36**, and places the device **20** back into the patient's mouth **36** so that bite block **26** resides in the opposite side of the patient's mouth **36**. Alternatively, if the device is disposable, the health care provider must ensure that a device adapted for use with the size and side of the mouth being examined is used. After use of the intraoral illumination device **20**, the tongue and cheek retractor **22** is disposed and the bite piece **26** and dispersion piece **24** are autoclaved or sterilized by a similar method. If a disposable intraoral illumination device is used, the device is simply disposed of in a proper biohazardous receptacle.

With reference to FIGS. **8**A and **8**B, the fluid evacuation system **34** of the intraoral illumination device **20** will now be described in greater detail. During dental examination and/or operation, a number of fluids, e.g., saliva from the parotid gland, blood, water from the dental equipment, are produced in the patient's mouth **36**. It is important to remove these fluids for the comfort of the patient, to prevent fluids and material from being aspirated into the throat or lungs of the patient, and to assist the health care provider in observing and/or operating within the patient's mouth **36**. The fluid evacuation system **34** removes fluids from all areas of the mouth, e.g., operating side, vestibule area on the operation side, the lingual vestibule (along the side of the tongue), contra-lateral side vestibule, eliminating the need for constant patient mouth rinsing and the need for a dental assistant to aspirate debris.

The fluid evacuation system **34** is comprised of the aforementioned evacuation channels and holes located in fluid evacuation members such as the tongue and cheek retractor **22**, dispersion piece **24**, and bite block **26**. As used herein, the term "fluid evacuation member" refers to a piece that includes one or more evacuation channels for removing fluids from the patient's mouth. For example, as illustrated in FIGS. **8**A and **8**B, fluid is drawn from the tongue area through the evacuation holes **60** and evacuation channels **58** in the tongue retractor portion **56**. This fluid is further drawn through the second main evacuation channel **82** of the dispersion piece **24**, and the bite block **26**, and out the vacuum tube **32**. The suction drawing the fluids and debris out the vacuum tube **32** is provided by a vacuum source **110** (FIG. **1**).

With reference to FIGS. **9** and **10**, an intraoral illumination device **112** constructed in accordance with an alternative preferred embodiment of the invention will now be described. Elements of the intraoral illumination device **112** similar to those described above with respect to the intraoral illumination device **20** are referred to by common reference numbers, but with an "a" suffix, e.g., dispersion piece **24***a*. The intraoral illumination device **112** is similar to the intraoral illumination device described above, except it is adapted for use as a disposable unit, eliminating the need for sterilization and the associated costs and spread-of-disease risks. The device **112** includes an integrated bite block and light carrier/fluid evacuation tube connector **114**. The connector **114** is an over-molded piece, has a bitumen configuration, and is configured to extend significantly outside of the mouth of the patient where it connects with a combined bi-lumen light carrier and vacuum tube **116**. Because this connection between the connector **114** and combined light carrier and vacuum tube **116** is substantially outside of the patient's mouth, the combined light carrier and vacuum tube **116** can be re-used, i.e., does not have to be disposable and does not need to be autoclaved, avoiding degradation, especially of the light carrier, e.g., fiber optic bundle. As discussed above, the bite block **26***a* and dispersion piece **24***a* may be fixed relative to each other. Alternatively, as discussed above, the dispersion piece **24***a* may be pivotally connected to the bite block **24***a* in order to accommodate different size arch widths. Regardless, the bite block **26***a,* dispersion piece **24***a,* and tongue and cheek retractor **22***a* together form a single, integrated disposable piece.

With reference to FIGS. **11**A and **11**B, an alternative embodiment of an integrated bite block and light carrier/fluid evacuation connector **118** and combined light carrier and vacuum tube **120** are shown. In this embodiment, the light carrier portions and fluid evacuation portions are coaxially aligned.

With reference to FIGS. **12** and **13**, an intraoral illumination device **122** constructed in accordance with an additional preferred embodiment of the invention will now be described. Elements of the intraoral illumination device **122** similar to those described above with respect to the intraoral illumination devices **20**, **112** are referred to by common reference numbers, and with a "b" suffix. Similar to the intraoral illumination device **112** described above, the intraoral illumination device **122** is adapted for use as a disposable unit, eliminating the need for autoclaving and the associated costs and spread-of-disease risks. The device **112** preferably has a two-piece, integrated construction. The device includes a dispersion piece **124** surrounded by a tongue and cheek retractor **126**.

The dispersion piece **124** is preferably made of single, rigid, light-dispersive material such as acrylic or a flexible material such as a molded flexible urethane. However, it will be readily understood by those skilled in the art that other clear, flexible or rigid materials may be used. The dispersion piece **124** has an arcuate, light-dispersing section **128**, a bite block section **130**, and an optical connection section **132**. The light-dispersing section **128** is received within a main receiving channel **134** of the tongue and cheek retractor **126**. The light-dispersing section **128** may have a composition that is varied, e.g., graduated, to control the amount of dispersion in different areas of this section **128** and evenly distribute the overall rumination. The bite block section **130** includes a generally rigid support structure for the bite block. The optical connection section **132** is configured to optically connect the light-dispersing section **128** to the light source through a light carrier such as a fiber optic bundle.

The tongue and cheek retractor **126** includes a main body section **50***b,* a cheek retractor portion **52***b,* an upper roof portion **54***b,* and a tongue retractor portion **56***b*. Fluid evacuation channels (not shown) within the tongue and cheek retractor **126** communicate with the outside of the tongue and cheek retractor (such as through evacuation holes **60***b*) to remove fluids from the patient's mouth. The fluid evacuation channels communicate with the main evacuation channel **134**. The tongue and cheek retractor **126** includes a bite block **136** and a connection section **138**. The connection section **138** is configured to extend outside of a patient's mouth and attach to a multi-lumen tube **140**. The connection section **138** includes a retention barb **142**. The connection section **138** also houses a pair of fluid evacuation channels **144** and the optical connection section **132**.

The multi-lumen tube **140** includes fluid evacuation lumens **146** in order to communicate the fluid evacuation system in the device **122** with a vacuum source and a light carrier **148** in order to optically couple the dispersion piece **124** with a light source. The multi-lumen tube **140** includes

a connector **150** for attaching the intraoral illumination device to the multi-lumen tube **140**. A slot **152** in the connector **150** is configured to receive and retain the retention barb **142** when the connection section **138** is fully engaged with the multi-lumen tube **140**.

With reference to FIG. **16**, an embodiment of a transition mechanism **154** to transition a pre-existing light carrier **156** and a vacuum tube **158** at the health care provider's into the single, multi-lumen tube **140** is shown. The transition mechanism **154** includes the appropriate connections for attachment to pre-existing light carriers **156** and vacuum tubes **158** or may include separate connectors for interfacing between light carriers **156** and vacuum tubes **158** and the transition mechanism **154**. In an alternative pre-embodiment, the transition mechanism **154** may include a light source and/or a vacuum source, eliminating the need to connect with a light carrier **156** and/or vacuum tube **158**. With reference to FIG. **17**, a special connector **160** may interface between the transition mechanism **154** and the multi-lumen tube **140** to further transition the transition mechanism **154** into the multi-lumen tube **140**. However, it will be readily apparent to those skilled in the art how transitioning devices such as the special connector **160** may be located within the transition mechanism **154**, eliminating the need for a special connector.

Together, the intraoral illumination device **122**, multi-lumen tube **140**, transition mechanism **154**, and light source form an intraoral illumination system and the intraoral illumination device **122** in conjunction with one or more of the following form an intraoral illumination kit: the multi-lumen tube **140**, the transition mechanism **154**, the light source, the vacuum source, the special connector **160**, and separate connector(s) for attaching light carrier **156** and/or vacuum tube **158** to the transition mechanism **154**

The method of manufacturing the intraoral illumination device will now be described. The intraoral illumination device is manufactured in a two-step process known as multi-shot injection molding. The acrylic dispersion piece **124** is molded first in a two-piece mold including a first mold having a first mold cavity and a second mold having a second mold cavity, and, then, the second mold is removed. The second mold is replaced by a third mold having a third mold cavity that has the details of the tongue and cheek retractor **126**. Next, rubber is injected over the dispersion piece **124** to form the tongue and cheek retractor **126**. A gas-assist injection molding process is then used to produce the fluid evacuation channels and cavities within the tongue and cheek retractor **126**. Fluid evacuation holes are created in various locations of the tongue and cheek retractor **126** to provide specific area suction within a patient's mouth. The fluid evacuation holes may be created by a laser cutting process, or similar cutting process.

The multi-lumen tube **140** is extruded with the light tube **148** enclosed within the tube **140**. The light tube **148** is made from a semi-flexible, solid-core plastic, optical material such as a fiber optic bundle and is covered with a cladding such as Teflon before extrusion. With reference to FIG. **15**, the multi-lumen tube **140** is extruded so as to have an elliptical shape with the light tube **148** in the center. The tube **140** is extruded so that a portion of the light tube **148** extends beyond the distal end of the multi-lumen tube **140**. After extrusion, the multi-lumen tube **140** is over-molded with a custom connector **150**. Alternatively, the connector **150** may be a separate piece made of a material such as stainless steel and fixed to the end of the tube **140**. The connector **150** is configured to inhibit leakage and ensure a tight connection with the connection section **138** of the intraoral illumination device **122**.

Thus, the intraoral illumination device of the present invention eliminates the problem of shadowing resulting from an overhead light sources, single-point light sources, or other illumination sources of the past by transmitting dispersed light outwards from a rear, central part of the intraoral cavity, generally between the patient's rear teeth. The generally 180° arc of the dispersion piece spreads the area of illumination, eliminating shadows caused from a single point light source. The fluid evacuation system of the device vacuums oral fluids, water delivered by a dental handpiece, and debris. The fluid evacuation system prevents these fluids and debris from being aspirated or swallowed down the throat of the patient, improves the comfort of the patient, eliminates the need of the patient to continually rinse his or her mouth, and reduces the amount of spray emitted from the patient's mouth. The tongue and cheek retractor retracts and protects the cheek and tongue of the patient, helping to reduce interference between these parts of the mouth and the procedure. The bite block allows the patient to rest the muscles of mastication, eliminating the need to strain to keep his or her mouth open. Because the device simultaneously removes fluids and debris, isolates the area of interest in the mouth, and illuminates the area of interest, the time of the procedure and the need for an assistant is greatly reduced.

Although this invention has been described in terms of certain preferred embodiments, other embodiments apparent to those of ordinary skill in the art are also within the scope of this invention. Accordingly, the scope of the invention is intended to be defined only by the claims that follow.

We claim:

1. An intraoral illumination device for placement in the interior cavity of a patient's mouth, comprising

a curved main body portion to generally wrap around a rear part of the interior cavity of the patient's mouth;

a light dispersion piece extending along the curved main body portion to generally wrap around the rear part of the interior cavity of the patient's mouth, the main body portion and the dispersion piece being a single, integrated piece and of similar composition to control dispersion of light in a similar manner;

a bite piece at one end of the curved main body.

2. The intraoral illumination device of claim **1** further comprising

a cheek retractor portion at the opposite end of the curved main body portion from the bite piece and integral therewith.

3. The intraoral illumination device of claim **2**, the bite piece positionable on one side of the interior cavity of the patient's mouth and the cheek retractor portion positionable on the other side of the interior cavity of the patient's mouth.

4. The intraoral illumination device of claim **2**, the light dispersion piece extending into the cheek retractor portion.

5. The intraoral illumination device of claim **1**, the single, integrated piece being disposable.

6. The intraoral illumination device of claim **1**, the light dispersion piece being flexible.

7. The intraoral illumination device of claim **1**, the bite piece including ridges top and bottom to engage the teeth of the patient.

8. The intraoral illumination device of claim **1**, the bite piece being a single, integrated piece with the main body portion and the dispersion piece.

9. An intraoral illumination device for placement in the interior cavity of a patient's mouth, comprising

a curved main body portion to generally wrap around a rear part of the interior cavity of the patient's mouth

and an evacuation channel to be in fluid communication with the patient's mouth;

a light dispersion piece extending along the curved main body portion to generally wrap around the rear part of the interior cavity of the patient's mouth, the main body portion and the dispersion piece being a single, integrated piece and of similar composition to control dispersion of light in a similar manner;

a bite piece at one end of the curved main body.

10. The intraoral illumination device of claim **9** further comprising

a light carrier/fluid evacuation tube connector coupled with the light dispersion piece and the evacuation channel.

11. The intraoral illumination device of claim **10** further comprising

a vacuum source coupled with the connector;

a light source coupled with the connector.

12. The intraoral illumination device of claim **9** further comprising

a plurality of the said evacuation channel.

13. The intraoral illumination device of claim **9** further comprising

a cheek retractor portion at the opposite end of the curved main body portion from the bite piece and integral therewith.

14. The intraoral illumination device of claim **13**, the bite piece positionable on one side of the interior cavity of the patient's mouth and the cheek retractor portion positionable on the other side of the interior cavity of the patient's mouth.

15. The intraoral illumination device of claim **13**, the light dispersion piece extending into the cheek retractor portion.

16. The intraoral illumination device of claim **9**, the bite piece being a single, integrated piece with the main body portion and the dispersion piece.

17. An intraoral illumination device for placement in the interior cavity of a patient's mouth, comprising

a tongue and cheek retractor including a curved main body portion to generally wrap around a rear part of the interior cavity of the patient's mouth, a cheek retractor portion at one end of the curved main body portion and evacuation channels to be in fluid communication with the patient's mouth;

a light dispersion piece extending along the curved main body portion to generally wrap around the rear part of the interior cavity of the patient's mouth, the retractor and the dispersion piece being of similar composition to control dispersion of light in a similar manner;

a bite piece at the opposite end of the curved main body portion from the cheek retractor portion, the retractor, dispersion piece and bite piece being a single, integrated piece, the bite piece positionable on one side of the interior cavity of the patient's mouth and the cheek retractor portion positionable on the other side of the interior cavity of the patient's mouth.

* * * * *