Docusign Envelope ID: E9BA7F2F-5499-428A-96B4-B1C9082A1A93

UNITED STATES PATENT AND TRADEMARK OFFICE

BEFORE THE PATENT TRIAL AND APPEAL BOARD

ASCENTCARE DENTAL PRODUCTS, INC.
Petitioner

v.

SOLMETEX, LLC
Patent Owner

Patent No. 11,589,970
Issue Date: February 28, 2023
Title: INTRAORAL DEVICE WITH DETACHABLE MOUTH PROP

Inter Partes Review No. IPR2025-01057

DECLARATION OF DR. BRIAN P. BLACK IN SUPPORT OF PETITIONER'S PETITION FOR *INTER PARTES* REVIEW OF U.S. PATENT NO. 11,589,970

Solmetex Ex. 2040
Ascentcare Dental Products v. Solmetex - IPR2025-01104

Docusign Envelope ID: E9BA7F2F-5499-428A-96B4-B1C9082A1A93

TABLE OF CONTENTS

Contents

I. Introduction 6

II. Background and Qualifications....7

A. Education and Work Experience 7

B. Experience Related to Isolation Mouthpieces....9

III. Materials Considered 14

IV. Overview of the Patent At Issue 15

V. Level of Ordinary Skill in the Art....24

A. Legal Principals 24

B. Opinion as to the Level of a Person Having Ordinary Skill in the Art of the ’970 Patent....25

VI. Claim Construction 28

A. Legal Principals 28

B. Opinion on Claim Construction 28

VII. Summary of the Prior Art 29

A. Black 29

B. Park 31

C. Baughan 31

D. Johnson 33

E. Hirsch 34

VIII. Opinion on Grounds of Unpatentability 34

A. Legal Principals of Obviousness....34

B. Ground 1: Claims 1, 9-13, 15-16, and 18 are obvious under 35 U.S.C. 103 by Park in view of Baughan and Johnson. 38

Solmetex Ex. 2040
Ascentcare Dental Products v. Solmetex - IPR2025-01104

Docusign Envelope ID: E9BA7F2F-5499-428A-96B4-B1C9082A1A93

1. Independent Claim 1 38

2. Claim 9: "9. The mouthpiece of claim 1, wherein the suction connector comprises a cutout corresponding to a protrusion on a vacuum adapter for an interlocking fit." 63

3. Claim 10: "10. The mouthpiece of claim 1, wherein the suction connector connects the interior of the pocket to a vacuum source, wherein activation of the vacuum source provides suction of fluids from the interior of the pocket toward the vacuum source." 63

4. Claim 11: "11. The mouthpiece of claim 1, wherein at least one of the first wall, the second wall, or the connecting wall comprise a plurality of perforations." 64

5. Claim 12: "12. The mouthpiece of claim 11, wherein activation of a vacuum source associated with suction connector extending from the first end of the main body portion draws fluids from an exterior of the main body portion through one or more of the plurality of perforations into the interior space of the pocket of the main body portion." 64

6. Claim 13: "13. The mouthpiece of claim 1, further comprising a cheek retractor portion connected to the main body portion and having a surface that applies pressure when bent, wherein the pressure is based on resilience of the cheek retractor portion." 64

7. Claim 15: "15. The mouthpiece of claim 1, wherein the main body portion is formed by injection-molding as one piece." 65

8. Claim 16: "16. The mouthpiece of claim 1, wherein a material that forms the main body portion is a flexible, translucent, high heat-resistant, autoclavable silicone-based material." 66

9. Independent Claim 18 66

C. Ground 2: Claims 2-4, 7-8, and 17 are obvious under 35 U.S.C. 103 by Park in view of Baughan, Johnson, and Black. 68

1. Claim 2: "2. The mouthpiece of claim 1, wherein the mouth prop comprises a bite block portion and a strap portion,

Solmetex Ex. 2040
Ascentcare Dental Products v. Solmetex - IPR2025-01104

Docusign Envelope ID: E9BA7F2F-5499-428A-96B4-B1C9082A1A93

wherein the strap portion corresponds to a circumference of the suction connector, wherein a cross section of an opening of the strap portion is parallel to the cross section of the first opening of the suction connector and parallel to the cross section of the suction port opening, wherein a first edge and a second edge of an external surface of the strap portion are adjacent to an external surface of the suction connector, wherein the first edge is opposite the second edge, and wherein the strap portion is injection-molded in a single piece with the bite block portion." 68

2. Claim 3: "3. The mouthpiece of claim 2, wherein the strap portion is elastic." 69

3. Claim 4: "4. The mouthpiece of claim 2, wherein an external surface of the suction connector comprises a notch region corresponding to the strap portion, the notch region separating the external surface into a first surface and a second surface and defining an interior surface coupled to the first surface by a first side wall and coupled to the second surface by a second side wall." 69

4. Claim 7: "7. The mouthpiece of claim 2, wherein the suction connector further comprises an external plug protrusion corresponding to an opening through the bite block portion." 71

5. Claim 8: "8. The mouthpiece of claim 7, wherein the plug protrusion fits into the opening through the bite block portion to provide additional crush-resistance and decreased compressibility during biting by a patient." 71

6. Claim 17: "17. The mouthpiece of claim 1, wherein the mouth prop is interchangeable with a second mouth prop that is attachably and detachably associated with the main body portion, the second mouth prop being of a different size." 72

D. Ground 3: Claim 14 is further obvious under 35 U.S.C. 103 by Park in view of Baughan, Johnson, and Hirsch. 72

1. Claim 14: "14. The mouthpiece of claim 1, wherein the second wall further includes a stability bar protruding from an interior surface of the second wall and along a longitudinal axis of the main body portion." 72

Docusign Envelope ID: E9BA7F2F-5499-428A-96B4-B1C9082A1A93

IX. Conclusion 75

Docusign Envelope ID: E9BA7F2F-5499-428A-96B4-B1C9082A1A93

I, Dr. Brian P. Black, offer this declaration in support of the Petition for *Inter Partes* Review of U.S. Patent No. 11,589,970 ("the '970 Patent"). I am over the age of 18, competent to make this declaration, and have personal knowledge of the facts set forth below. If called to testify, I could and would testify honestly, under oath, to the matters set forth herein.

I. **INTRODUCTION**

1. I am a general dentist, and I am also the inventor of a dental isolation mouthpiece sold under the name Mr. Thirsty and disclosed in U.S. Patent No. 8,029,280. I disclosed the design of that dental isolation mouthpiece in a patent application filed in 2008, several years before Patent Owner filed a provisional application related to the '970 Patent. It is my understanding that one of my patents (U.S. Patent No. 8,029,280) is being used as part of a ground to demonstrate invalidity of the '970 Patent.

2. I have read the '970 Patent, and I am aware of Patent Owner's dental isolation mouthpiece sold under the name "Dryshield" through my dental practice. I recognize the Dryshield autoclavable product as a mouthpiece lacking a central spine and having sidewalls that fully enclose a central chamber of the mouthpiece. My patent is directed to an open-sided tongue shield aspirator. EX1005, 22:18. Through private experimentation, I found that an open-sided mouthpiece demonstrated improved performance with better suction properties than a closed-

Docusign Envelope ID: E9BA7F2F-5499-428A-96B4-B1C9082A1A93

sided mouthpiece, like the mouthpiece disclosed by the ’970 Patent and the Dryshield autoclavable product.

3. I have been informed that Patent Owner now asserts that its patent covers open-sided mouthpieces and mouthpieces that include a central spine. In particular, Patent Owner asserts that at least some claims are not limited to mouthpieces having sidewalls connecting an anterior wall and a posterior wall to enclose an interior chamber of the mouthpiece. EX1011. It is my understanding that Patent Owner has even asserted that a “connecting wall”, as claimed in claim 1, could be met by a bite block. EX1011, p. 6. These new, much broader, constructions recite mouthpiece structure that I, and others, disclosed long before December 2012, when Patent Owner filed its provisional application. Moreover, these new, much broader, constructions contradict statements made to the Examiner during prosecution explaining the claimed apparatus. EX1022.

4. I am not an attorney, and I have not been asked to offer any legal opinions. I have been informed and understand the law to be applied for determining invalidity, which I explain in places below. I have applied the law told to me in developing my technical opinions in this Declaration.

II. BACKGROUND AND QUALIFICATIONS

A. Education and Work Experience

Solmetex Ex. 2040
Ascentcare Dental Products v. Solmetex - IPR2025-01104

Docusign Envelope ID: E9BA7F2F-5499-428A-96B4-B1C9082A1A93

5. I received my dental degree (Doctor of Dental Surgery, "DDS") from Loma Linda University School of Dentistry (LLUSD) on May 28, 2000. I was born and raised in Southern California where I was educated, worked, and lived for 51 years. After I graduated from dental school, I successfully completed a one-year Advanced Education in General Dentistry (AEGD) residency through the United States Air Force (USAF) in the 82nd Dental Squadron at Sheppard Air Force Base in Wichita Falls, Texas on August 1, 2001. I then served as a staff dentist in the 95th Dental Wing at Edwards Air Force Base located in Edwards, California from September 10, 2001 to June 19, 2003. I received an honorable discharge from active duty in the USAF and returned to LLUSD as a clinical instructor, eventually becoming the predoctoral clinic director and achieving a promotion to associate professor.

6. I subsequently resigned to pursue dental product development for a company I founded in 2007. Concurrently, I also practiced as an associate dentist for a large dental group from 2009 - 2012. I then started my own dental practice, which I operated for almost ten years, growing it to over 4,000 active patients. I sold my practice on December 20, 2021 and moved to Washington state in January 2022.

7. Currently, I am employed as the lead dentist for a Native American tribe in Washington. As the lead dentist, I manage the daily operation of the tribe's

Docusign Envelope ID: E9BA7F2F-5499-428A-96B4-B1C9082A1A93

dental clinic, which is one of several departments in the tribe's community health center.

8. I have a significant history and experience in the subject matter as evidenced in the attached curriculum vitae (EX1004).

B. **Experience Related to Isolation Mouthpieces**

9. I resigned my faculty appointment at LLUSD in the Fall of 2008 to dedicate my full attention to Edge Medical Technologies, Inc., a company I founded in 2007 for the purpose of developing a competitive intraoral isolation device and, potentially, other dental products. I successfully developed and secured U.S. patents for "Mr. Thirsty," an intraoral isolation device. By "intraoral isolation device," I mean a device that the dentist or hygienist can use that holds a patient's mouth open like a bite block so the patient doesn't have to use his/her jaw muscles actively, while the device also suctions fluids away from the patient's throat so he/she does not choke on or swallow those fluids while the dentist or hygienist is working. As yet a further benefit, an intraoral isolation device retracts a patient's tongue and cheek tissue so that the tongue and the cheek tissue do not interfere with the dental procedure. The goals for such a device are: 1) for patients to be more comfortable during procedures, 2) for dentists and hygienists to have a clearer or drier working space, and 3) for dentists or hygienists to complete procedures in less time because normal disruptions are obviated, such as patients

Docusign Envelope ID: E9BA7F2F-5499-428A-96B4-B1C9082A1A93

resting jaw muscles, breathing, coughing, or swallowing fluids or debris. Also, the continuous suction from the intraoral isolation device results in fewer interruptions because the dental assistant no longer must periodically insert the typical suction tube into the mouth to clear fluids.

10. During my service in the USAF, I first learned of an intraoral isolation device named "Isolite" through dental advertisements in trade publications. Isolite off ered a method for helping dental patients keep their mouths open passively during dental procedures while simultaneously removing fluids and debris through suction (as previously described), but it also provided illumination in the mouth for the dentist or hygienist to have better visibility while working.

11. I subsequently attended the California Dental Association (CDA) Scientific Session (an annual dental education conference and trade show) in Anaheim, California, May 12-15, 2005 where I saw the Isolite device displayed and sold by the company Isolite Systems (now Zyris) at their booth. Looking at the device, I noticed that it had two parts: the first part was a flexible, translucent, somewhat figure-8 shaped "mouthpiece" which had, at one end, a bite block for the upper and lower teeth to rest on and keep the patient's mouth open passively. And, extending from the inside edge of the bite block, the mouthpiece had a wide shape that blocked the tongue, then narrowed to wrap behind the upper and lower molars, and then widened again into a smaller round end flap that pushed the cheek away.

Docusign Envelope ID: E9BA7F2F-5499-428A-96B4-B1C9082A1A93

The second component was an adapter that connected to a High-Volume Evacuation (HVE) hose. The second component was specially designed to house the lighting mechanism that illuminated the mouthpiece when in the patient's mouth. The adapter inserted into the bite block end of the mouthpiece.

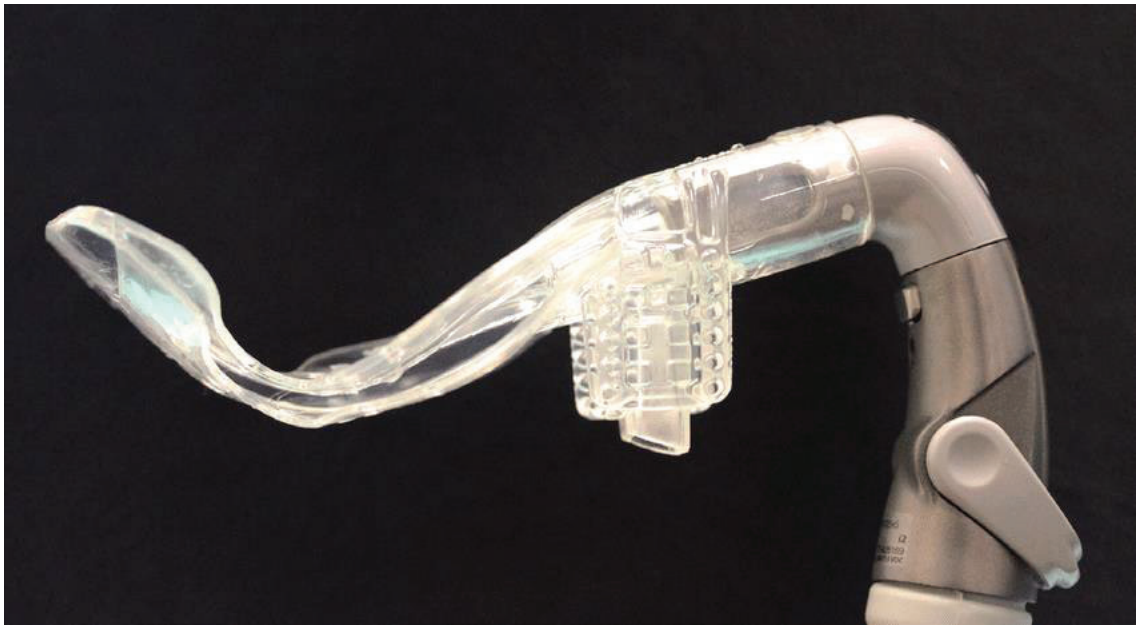

12. An HVE hose typically connects to a 9 mm internal diameter opening (or larger) for a straight or slightly angled, plastic, disposable tube that is inserted into the patient’s mouth for purpose of suctioning debris during dental procedures.

Docusign Envelope ID: E9BA7F2F-5499-428A-96B4-B1C9082A1A93

Differently, the Isolite HVE adapter terminated with two smaller diameter suction channels, which results in decreased suction.

13. The Isolite mouthpiece was designed so that it had two upper and lower flaps separated by a thicker, longitudinal "spine" (imagine a butterfly whereby the body is the "spine" and the wings extending from it are the "flaps").

14. These flaps were paired (imagine the butterfly with two sets of wings of the same size and shape on each side of its body) and had a series of holes along the outer edges of each flap. When the flaps were pressed together in the mouth, suction would pull fluids through the holes and between the compressed flaps. The spine had an added benefit: it allowed light to travel through it and illuminate the mouthpiece, thereby illuminating the patient's mouth where the dentist worked.

15. The Isolite mouthpiece is symmetrical so that it could be used on either side of the mouth by rotating it 180 degrees. In so doing, there exists "upper" and "lower" channels relative to the spine. *See* EX1012.

16. I became interested in the Isolite mouthpiece while working at LLUSD. It is ideal for practitioners who do not have a dental assistant to help with fluid removal during procedures. Student dentists are not provided with dental assistants, so they work unaided. This presents a host of challenges for both the student and the patient.

Solmetex Ex. 2040
Ascentcare Dental Products v. Solmetex - IPR2025-01104

Docusign Envelope ID: E9BA7F2F-5499-428A-96B4-B1C9082A1A93

17. After careful analysis of the Isolite system, I determined that there were three limiting factors: 1) high cost, 2) the advent of lightweight and affordable LED lighting for dental loupes (glasses that dentists and hygienists wear for magnified views of the teeth and gums), and 3) the lack of true HVE suction due to the Isolite HVE hose having two (upper and lower) smaller diameter suction channels that connected to the mouthpiece's upper and lower channels.

18. So, in 2007, I started to develop an affordable, disposable, unlighted, intraoral isolation dental mouthpiece that could insert directly into any standard HVE hose valve. In doing so, I reviewed prior intraoral isolation device designs. I also asked a law firm to review my concept and give an opinion on both "patentability" and "non-infringement" of known patents. I received favorable opinions on both matters. Subsequently, I was awarded U.S. Patent Nos. 8,029,280 and 8,292,620 (the latter now abandoned). The patent for my intraoral isolation device is currently licensed to Zirc Dental Products, who manufactures, markets, and sells the device as "Mr. Thirsty".

19. I have been retained as an independent expert consultant by Ascentcare Dental Products, Inc. ("Petitioner") in connection with a petition for *inter partes* review of the '970 Patent (EX1001).

20. Specifically, I was asked to investigate and opine on the technology claimed in, and the patentability or unpatentability of certain claims of the '970

Docusign Envelope ID: E9BA7F2F-5499-428A-96B4-B1C9082A1A93

Patent. I was also asked to opine on the validity of claims 1-4 and 7-18 (the "Challenged Claims") of the '970 Patent.

21. Although I am being compensated for my services in this matter at my standard consulting rate of $650 per hour, my compensation is not contingent upon the opinions I render or the outcome of this proceeding. I have no financial interest in any of the parties, and I have no other interest in this proceeding.

22. This report is based on information currently available to me. I reserve the right to amend or supplement my analysis in this report and/or to respond to any additional submissions prepared by or on behalf of the Patent Owner. I also reserve the right to amend or supplement my opinions based on further discovery and information provided in the case.

23. I reserve the right to create any additional summaries, tutorials, demonstrations, charts, drawings, tables, and/or animations that may be appropriate to supplement and demonstrate my opinions as necessary.

24. All of the opinions stated in this report are based on my own personal knowledge and professional judgment.

III. **MATERIALS CONSIDERED**

25. I have considered the following list of materials in formulating my opinions in this matter:

Docusign Envelope ID: E9BA7F2F-5499-428A-96B4-B1C9082A1A93

Ex #	Exhibit
1001	U.S. Patent No. 11,589,970 ("the '970 Patent")
1002	Prosecution History of the '970 Patent (part 1)
1005	U.S. Patent No. 8,029,280 to Black ("Black")
1006	Korean Patent No. 10-1082826 ("Park")
1007	U.S. Patent No. 3,101,543 ("Baughan")
1008	U.S. Patent No. 4,017,975 ("Johnson")
1011	Solmetex Infringement Contentions
1012	U.S. Patent Application No. 2003/0134253 ("Hirsch")
1013	Korean Patent No. 10-0654392
1014	U.S. Patent No. 8,911,232
1015	Prosecution History of U.S. Patent No. 8,911,232
1016	U.S. Patent No. 4,024,642
1017	U.S. Patent No. 1,731,322
1018	U.S. Patent No. 6,575,746
1019	U.S. Patent No. 9,532,858
1020	Prosecution History of the '970 Patent (part 2)
1021	Prosecution History of the '970 Patent (part 3)
1022	Excerpt from Prosecution History of the U.S. Patent No. 11,589,969

IV. OVERVIEW OF THE PATENT AT ISSUE

26. I have read and considered the '970 Patent, EX1001, filed on March 27, 2014, as well as its prosecution history. EX1002; EX1020; EX1021. I am told that the '970 Patent is a continuation of U.S. Patent No. 8,911,232, and I have also considered the prosecution history of U.S. Patent No. 8,911,232 because I have

Solmetex Ex. 2040
Ascentcare Dental Products v. Solmetex - IPR2025-01104

Docusign Envelope ID: E9BA7F2F-5499-428A-96B4-B1C9082A1A93

been told that statements made in a related patent proceeding can impact the scope of other patents in the same patent family. EX1015. I also reviewed the prosecution history of U.S. Patent No. 11,589,969 because I also submitted a declaration challenging the validity of that patent. I have been told that the ’970 Patent has a priority date of December 7, 2012 for some claim features. It is my understanding that the provisional patent application may not support all claim limitations in the ’970 Patent, but for the purposes of my review, this date was irrelevant because all the prior art I studied was published over a year before December 7, 2012.

27. It must be noted that all four mouthpieces I considered for this report (the ’970 Patent, Hirsch, Park, Black) have similar shapes and structure due to their function. EX1001, FIG. 1B; EX1005, FIG. 4C; EX1006, FIG. 3; EX1012, FIG. 19A.

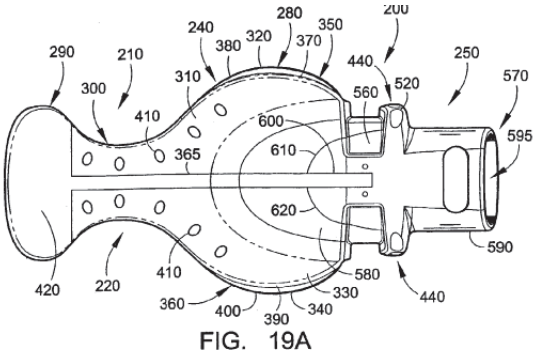

FIG. 19A

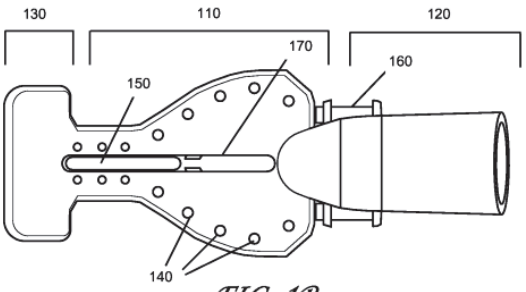

FIG. 1B

Solmetex Ex. 2040
Ascentcare Dental Products v. Solmetex - IPR2025-01104

Docusign Envelope ID: E9BA7F2F-5499-428A-96B4-B1C9082A1A93

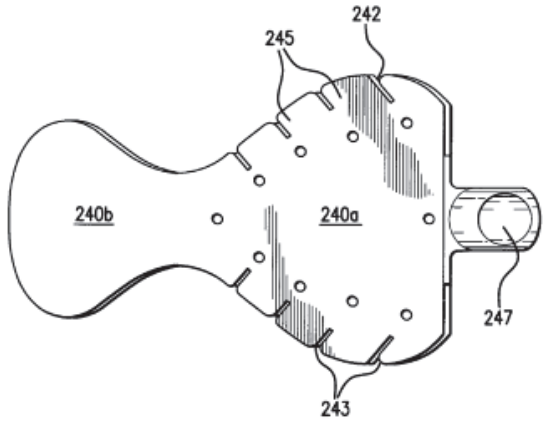

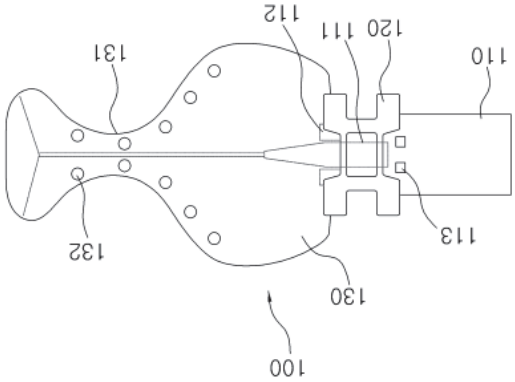

All four mouthpieces have a main larger body portion that blocks the tongue, then a narrower connecting portion that ends in a smaller cheek retractor end. On each mouthpiece, the larger body portion has an extension to connect to a suction hose. All of these devices have an anterior (front or first wall) and a posterior (back or second wall), and all mouthpieces are longitudinally symmetrical. Hence, none of these features of the ’970 Patent are novel or unique.

28. The ’970 Patent teaches a dental isolation with the same basic shape as my invention. My patent and the ’970 Patent both teach a suction connector formed on one side of the mouthpiece, a removable bite block formed near the suction connector end, a wider tongue suppression element, a narrow isthmus formed at an end of the mouthpiece opposite the suction connector, and a wider cheek retractor also connected to the isthmus. EX1001, FIG. 1B, 5:1-2, 5:21-34, 4:13-21, 3:8-14; EX1005, FIG. 23A, 14:1-20; 2:1-6.

Solmetex Ex. 2040
Ascentcare Dental Products v. Solmetex - IPR2025-01104

Docusign Envelope ID: E9BA7F2F-5499-428A-96B4-B1C9082A1A93

29. The ’970 Patent, just like my patent, discloses an anterior wall/layer and a posterior wall/layer formed parallel to each other. EX1001, 3:45-50, FIG. 1A; EX1005, 14:25-30. The ’970 Patent further discloses a “bridge structure” 180, which is a plurality of projections extending upward from the posterior wall to ensure that the anterior wall remains separated from the posterior wall under suction. EX1001, 4:48-67. My patent includes the same basic idea, with my patent including a plurality of transverse walls that form channels and ensure that the anterior layer remains separated from the posterior layer. EX1005, 14:21-47

30. Indeed, the only major difference between my patent and the ’970 Patent appears to be the existence of sidewalls in the ’970 Patent, whereas my patent opted for open sides. EX1001, FIG. 1A, 1D; EX1005, FIG. 23C. However, the claims of the ’970 Patent no longer requires sidewalls. For example, claim 1 merely requires a “connecting wall” formed somewhere along an edge of the “main body portion” (i.e., the tongue retractor part). EX1001, claim 1. Knowing that Patent Owner intends to read a connecting wall formed anywhere, and not limited to the sides or limited to the main body portion, my patent includes such a connecting wall, which is formed near the suction connector. EX1011, p. 6; EX1005, e.g., FIG. 4C.

Docusign Envelope ID: E9BA7F2F-5499-428A-96B4-B1C9082A1A93

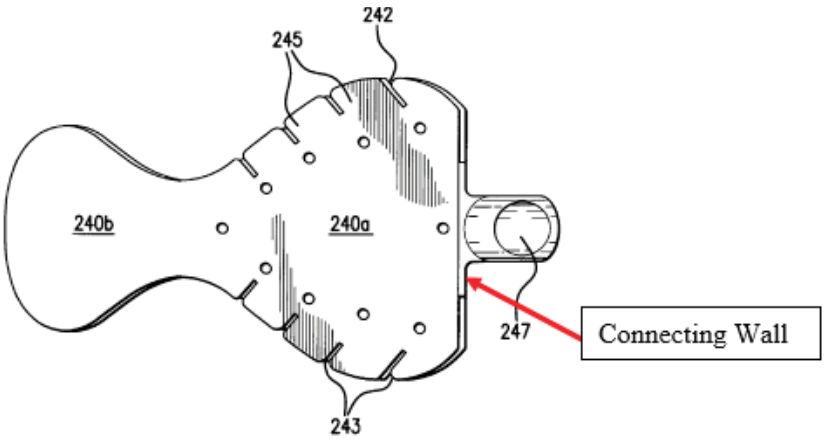

FIG.4C

31. The ’970 Patent discloses an enclosed space or “pocket”, and there exists a bridge structure 180 on the interior surface of the mouthpiece’s posterior wall. EX1001, 4:48-67.

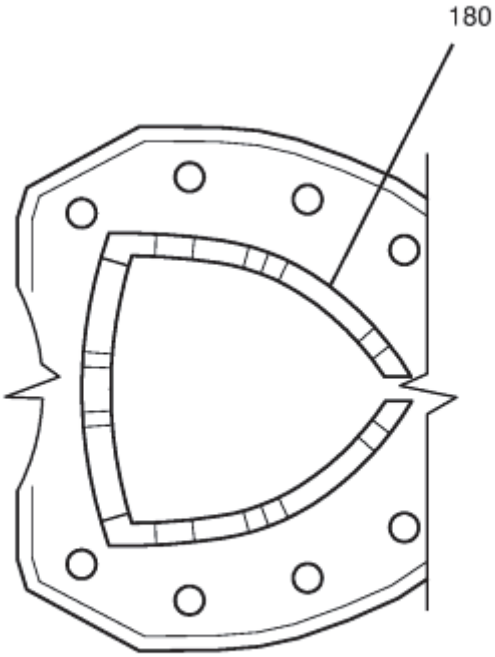

FIG. 5

Docusign Envelope ID: E9BA7F2F-5499-428A-96B4-B1C9082A1A93

The bridge 180 is, in fact, intermittent vertical extensions of the same material that comprises the interior surface of the second wall; these material extensions form the "crest" and the lack thereof forms the "trough" in this description, and the combination of crests and troughs form a "wave shape". *Id.*

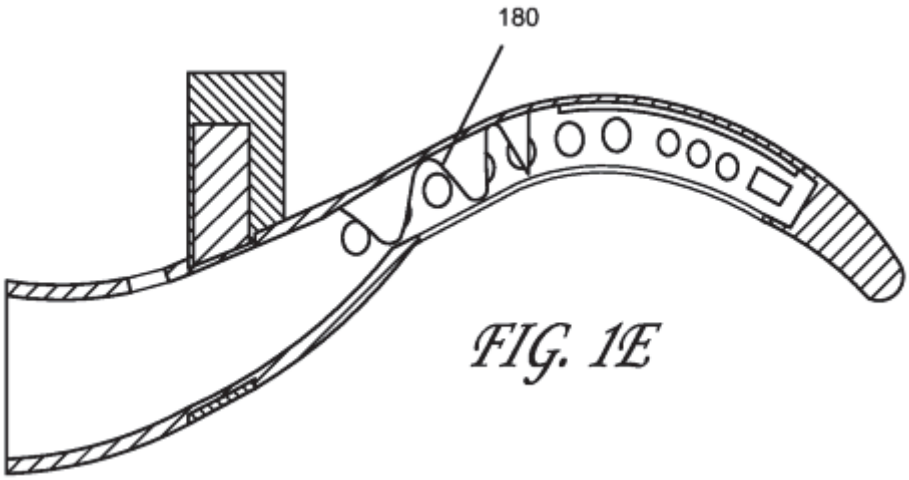

The bridge prevents the interior of second (posterior) wall from completely collapsing into the interior (facing surface) of the opposing first (anterior) wall from suction pressure because the vertical extensions called "crests" from the interior surface of the second (posterior) wall stop the interior (facing) surface of the first (anterior) wall from collapsing upon the posterior wall, thereby blocking suction. Meanwhile, the "troughs" allow for suction pressure, and thereby fluid flow, to continue within and through mouthpiece to the connected suction hose. EX1001, 4:48-67.

Solmetex Ex. 2040
Ascentcare Dental Products v. Solmetex - IPR2025-01104

Docusign Envelope ID: E9BA7F2F-5499-428A-96B4-B1C9082A1A93

32. I reviewed the very long and extensive prosecution history leading up to the issuance of the ’970 Patent. Having gone through the patent system myself, twice, I was quite surprised to see that prosecution lasted for almost 9 years. This is particularly surprising when the prosecution history for the parent application lasted less than two years.

33. Beginning with the parent application, I note that the originally filed claims recited a sidewall. EX1015, p. 24. In fact, the claims are a bit more specific in explaining that the sidewall “define[s] an interior portion of the defined pocket”. *Id.* In other words, Patent Owner originally believed that his invention was directed to an enclosed pocket enclosed by an anterior wall, a posterior wall, and a sidewall. As I said above, that was also my understanding of the Dryshield product, particularly in how it differed from my invention.

34. I see that my patent was originally used to reject the claims of the parent application. EX1015, pp. 51-52. What is most interesting to me is that the Examiner found that the transverse walls 348c disclosed by Black (my patent) are “a bridge structure protruding from an interior surface of the posterior wall, the protruding structure comprising a plurality of spaced contact points that keep the anterior wall separated from the posterior wall during suction”. *Id.* The Examiner specifically said “Black discloses an intraoral suction device comprising a wave-shaped bridge structure 48c having formed therein the interior wall of the device

Docusign Envelope ID: E9BA7F2F-5499-428A-96B4-B1C9082A1A93

40 (FIG. 3B; paragraph 80). Note that the troughs between bridges/transverse walls 48c allow for communication with the suction source." Patent Owner appears to have added the language "the bridge structure is not attached to the first wall" to amend around the teachings of my patent.

35. My patent was again cited in the second office action against the claimed bridge structure. EX1015, pp. 109-111. Different than the first office action, the Examiner found that dependent claim 9 was now allowable, dependent claim 9 further reciting "that contact points of the bridge structure formed a wave shape with contact points at crests of the wave shape". It is unclear why this subject matter was allowable over Black in the second office action, but not the first. Regardless, Patent Owner amended the independent claims to include the subject matter of allegedly allowable claim 9, and the Examiner allowed the application. EX1015, pp. 109-111, 130, 140.

36. Now having an allowable application, Patent Owner filed a continuation application, which ultimately, after 9 years of prosecution, became the '970 Patent. EX1002, p. 30. The original claims again included a "sidewall connecting an edge of the anterior wall to an edge of the posterior wall." *Id.* This limitation was replaced in claims 1 and 18 of the '970 Patent with the language "a connecting wall that connects one or more edges of the first wall to one or more corresponding edges of the second wall across the distance between the first wall

Solmetex Ex. 2040
Ascentcare Dental Products v. Solmetex - IPR2025-01104

Docusign Envelope ID: E9BA7F2F-5499-428A-96B4-B1C9082A1A93

and the second wall". EX1001, claim 1 and 18. In other words, the "sidewall" limitation was removed in favor of "connecting wall".

37. This patent application faced a first office action, and the Examiner cited my patent to reject the claimed "bridge structure" in claims 13-16. EX1002, p. 186. The Examiner said "Black et al. discloses an intraoral suction device comprising a plurality of protrusions and wave-shaped bridge structure. Black et al. discloses an intraoral suction device comprising a wave-shaped bridge structure 48c having formed therein the interior wall of the device 40 (FIG. 3B; paragraph 80). Note that the troughs between bridges/transverse walls 48c allow for communication with the suction source." *Id.* The Examiner maintained that rejection again later. EX1002, p. 246. Applicant disagreed that Black taught the wave shape as claimed. EX1002, p. 289. Applicant later refined that argument explaining that Black fails to teach a bridge structure unattached to the anterior wall. EX1002, p. 313.

38. The Examiner then began relying on Hirsch. For the next few responses, Patent Owner pursued claims directed to the removable bite block. EX1002, p. 457-460, 612, 646, 698, 754, 774. But these amendments were consistently rejected by either Hirsch or Black.

39. In January 2021, Patent Owner made a dramatic change in claim scope, where, for the first time, Patent Owner attempted to claim a mouthpiece

Docusign Envelope ID: E9BA7F2F-5499-428A-96B4-B1C9082A1A93

lacking *any* sidewalls. EX1002, p. 850. Conspicuously, the dramatic claim scope change occurred just one month after Petitioner launched a competing product that lacked sidewalls. I have been told that Petitioner launched its first mouthpiece in December 2020.

40. Ultimately, Patent Owner amended the claims to insert claim language directed to a "connecting wall" in the two independent claims in response to an "omitted essential matter" rejection. EX1002, p. 861-862, 930.

41. Eventually, the claims were allowed. EX1021, p. 1222.

V. LEVEL OF ORDINARY SKILL IN THE ART

A. Legal Principals

42. I have been informed that patents are considered from the perspective of a person having ordinary skill in the art, and that this is a hypothetical person who is presumed to know the relevant prior art.

43. I have been informed that the following five factors inform the analysis for determining the level of ordinary skill in the art: (1) type of problems encountered in the art; (2) prior art solutions to those problems; (3) rapidity which innovations are made; (4) sophistication of the technology; and (5) educational level of active workers in the field. I apply these factors in the section below in providing my opinion as to the level of one having ordinary skill in the art.

Solmetex Ex. 2040
Ascentcare Dental Products v. Solmetex - IPR2025-01104

Docusign Envelope ID: E9BA7F2F-5499-428A-96B4-B1C9082A1A93

B. Opinion as to the Level of a Person Having Ordinary Skill in the Art of the ’970 Patent

44. I have knowledge relevant to what a person having ordinary skill in the art (“POSA”) at the time of the invention would understand and do. Indeed, in 2012, I had invented a dental isolation mouthpiece extremely similar to the ’970 Patent. By 2012, I had filed for, prosecuted, and received two patents related to my dental isolation mouthpiece. Moreover, I designed and sold my product since 2008. Additionally, I am a dentist and had been working as a dentist for 12 years by 2012. I am able to read and understand the claims and specifications of the prior art and the ’970 Patent in the light that a POSA would read and understand them.

45. In my opinion, and applying the factors set forth above in paragraph 43, a person of ordinary skill in the art at the time of the filing of the ’970 Patent would be: a person having at least a degree in mechanical engineering or dentistry, with at least 2 years’ experience designing dental isolation mouthpieces. If a person has a higher level of education, such as a master’s degree, less work experience could be acceptable, and vice versa. My opinion is based on the following analysis.

46. Regarding the types of problems encountered in the art, in 2007, I observed that the Isolite was an innovative approach to intraoral isolation because it had a mouthpiece that employed a vacuum (suction), a bite block, and a tongue

Solmetex Ex. 2040
Ascentcare Dental Products v. Solmetex - IPR2025-01104

Docusign Envelope ID: E9BA7F2F-5499-428A-96B4-B1C9082A1A93

and cheek retractor. However, the problem I observed was that it had a high cost, a light which was not necessary with the emerging market of lightweight, portable, wearable LED lighting, and the lack of true high-volume suction capability. As such, the types of problems encountered by the art included reducing unit cost and increasing suction capabilities of an isolation mouthpiece.

47. Prior art solutions for intraoral isolation date back to the advent of cotton rolls, which are used to block saliva flow or protect soft tissue when placed in the mouth during dental procedures. Other well-known solutions include cheek retractor shields like "dry-angles" and the rubber dam - a sheet of rubber/latex material that has a hole or series of holes punched through it to slide over a tooth or series of adjacent teeth, then held in place by an external frame and a retaining ring on the tooth. Of course, Hirsch, Park, and Black were all prior art solutions in 2012, so combined bite blocks, isolation mouthpieces, cheek retractors, and suctioning devices were known in 2012.

48. Regarding rapidity, innovations in intraoral isolation devices have occurred with a moderate frequency in the past six decades. Devices such as the "Erickson Vac-Ejector," "Svedopter," cotton rolls and cotton roll holders, disposable saliva ejectors, and HVE tips; "Dry Angles" and rubber dams all serve as suitable intra-oral isolation devices with various advantages and limitations.

Docusign Envelope ID: E9BA7F2F-5499-428A-96B4-B1C9082A1A93

Isolation mouthpieces, like Isolite, also emerged around 2000, but the basic shape and structure of those mouthpieces has not changed in over 20 years.

49. Regarding sophistication level, intraoral isolation devices can be designed using computer aided drafting (CAD) on programs such as SolidWorks and then transferred for a prototype manufacturing process using stereolithography (SLA). These technologies allow for inexpensive design and prototyping. Furthermore, modifications can be made quickly if beta testing the prototypes yields poor results. With modern injection molding machines, dental isolation products can be created with softer thermoplastic materials. Moreover, most isolation mouthpieces rely on conventional mechanical structure used in dental apparatuses for a long time, such as anti-collapse projections and molded walls disclosed at least as early as the 1960s.

50. Finally, regarding education level, some knowledge of mechanical engineering is probably required, but an understanding of intraoral anatomy is at least equally important. As such, hands-on dentistry or knowledge from those in the dentistry field cannot be substituted when trying to design dental apparatuses to be used by dentists.

51. In view of all these factors, it is my opinion that a POSA is someone with a degree in mechanical engineering or dentistry with at least two years of

Docusign Envelope ID: E9BA7F2F-5499-428A-96B4-B1C9082A1A93

experience in designing dental isolation mouthpieces. Of course, more work experience could supplement a lowered educational level and vice versa.

VI. CLAIM CONSTRUCTION

A. Legal Principals

52. I have been informed that in a proceeding for *inter partes* review, claim terms in an unexpired patent are to be given their plain and ordinary meaning, as understood by a person having ordinary skill in the art, in view of the patent's specification.

B. Opinion on Claim Construction

53. I believe that all terms, for the purposes of *inter partes* review, can be given their plain and ordinary meaning in view of the specification. Also, to the extent there is any dispute regarding claim scope, I am applying Patent Owner's implied construction in view of the infringement contentions supplied. EX1011.

54. To the extent that the parties have disputes as to claim interpretation, they are irrelevant to the validity of the '970 Patent because it is my opinion that all of the claims are clearly invalid as obvious based on the prior art I have considered and my experience in the dental isolation mouthpiece field.

55. I note Patent Owner's implied claim constructions from their infringement contentions, but I do not necessarily agree with these constructions.

Solmetex Ex. 2040
Ascentcare Dental Products v. Solmetex - IPR2025-01104

Docusign Envelope ID: E9BA7F2F-5499-428A-96B4-B1C9082A1A93

For example, I do not agree that significantly different sized walls can be "corresponding" under the claim language because walls of differing size would not be able to form an acceptable connecting wall that connects the "corresponding edges". I note that Patent Owner asserts that Petitioner's device, which has a much larger posterior wall than the anterior wall is "corresponding". EX1011, p. 4. Regarding terms like "end", "edge", and "side", Patent Owner seems to conflate these words, despite using different terminology to define their invention. EX1011, p. 7. Also, I do not believe a "connecting wall" can exist outside of the main body portion and meet the claim language. *Id.*

56. Nevertheless, Ground 1 shows invalidity of '970 Patent in view of either Petitioner's or Patent Owner's construction. So, again, claim construction is not an issue the Board must resolve to find invalidity.

VII. SUMMARY OF THE PRIOR ART

A. Black

57. Black is my patent, and I invented the mouthpiece disclosed by Black.

58. In the Black mouthpiece, the intra-oral device is comprised of first and second layers (like "walls" or "flaps") whereby these two layers (see column 22 line 28) are connected "by a plurality of walls such that the first and second layers are spaced apart from one another and define therebetween a single axial

Docusign Envelope ID: E9BA7F2F-5499-428A-96B4-B1C9082A1A93

passageway, said passageway having a distal end that coincides with the second layer's distal edge and is open so as to be directly exposed to the patient's oral cavity at said distal end...” EX1005, 1:53-56.

59. Furthermore, in claim 16 (see EX1005, 23:34-45), these “plurality of walls including two walls disposed above the axial passageway so as to form and upper channel extending from the passageway towards the top edge of the second layer, and two walls disposed below the axial passageway so as to form a lower channel extending from the passageway towards the bottom edge of the second layer, wherein the upper channel provides fluid communication between the passageway and an upper portion of the patient's oral cavity, and the lower channel provides fluid communication between the passageway and a lower portion of the patient's oral cavity.” Moreover, in claim 21, the Black mouthpiece is described to have a “longitudinal stiff ener” (EX1005, 23:66-67).

60. So, the Black mouthpiece has two layers (like Hirsch “flaps”) connected or “bridged” together by vertical extensions (identified as “transverse walls”) to prevent collapse of the two layers when suctioning fluids through the channels. EX1005, 5:36-44. In this case, this plurality of walls each physically connect one layer to the other. *Id.* Also, the Black mouthpiece has a stiff ener along the length of the mouthpiece to add rigidity to the device, which aids in preventing collapse during suction. EX1005, 19:4-18.

Solmetex Ex. 2040
Ascentcare Dental Products v. Solmetex - IPR2025-01104

Docusign Envelope ID: E9BA7F2F-5499-428A-96B4-B1C9082A1A93

B. **Park**

61. Park discloses a "detachable oral illuminating device with a mouth prop" having a first and second wall joined by upper and lower continuous edge similar to the dental mouthpiece. EX1006, Abstract. Park also incorporates an LED light, which can be projected through a light guide that illuminates the mouthpiece while debris is suctioned through the first and second walls aided by a multiplicity of through holes. EX1006, Abstract, ¶¶ 28-31.

62. Park explains that "light guide that extends to project from the LED to the front of the fitting connection portion, guiding the light emitted from the LED to the mouth prop" and "at the center of the interior of the insertion port, a post fitting groove can be formed to accommodate the protruding light guide when the fitting connection portion is inserted, and suction ports can be formed on both sides of the post fitting groove to suck in foreign substances from the oral cavity." EX1006, ¶¶ 13-14.

63. Park further explains that "multiple through holes (132) can be formed in the tongue retractor (130)". EX1006, ¶ 31. Finally, FIG. 2 and FIG. 6 show "multiple through holes"(132) on the "tongue retractor" (130) and a closed, continuous edge on the illustration. *Id.*

C. **Baughan**

Docusign Envelope ID: E9BA7F2F-5499-428A-96B4-B1C9082A1A93

64. Baughan describes an intra-oral isolation device that uses a saliva ejector, which attaches to a smaller diameter, lower volume suction hose typically found in dental offices. EX1007, 1:7-44. Baughan states that one of the objectives is to "provide a dental saliva ejector which is engineered on sound theoretical principles with relation to air flow dynamics and air turbulence produced by the specific arrangement, number and size of the suction orifices and other design factors embodied in the device." EX1007, 1:26-31.

65. Continuing in the document, Baughan describes a device whereby radial discs surround a suction tube and in between the discs are vertical suction ports which intersect with the main suction tube (channel). EX1007, 2:19-35. This length of discs is covered by a perforated "sleeve" which cushion the patient's soft tissue. EX1007, 2:51-62. The Baughan patent description identifies the purpose for the sleeves and discs: "With suction applied to the main suction tube through the suction hose, the saliva which collects in the patient's mouth will be drawn inwardly through the apertures of the sleeves, and should these sleeves be drawn tightly about the discs, the saliva will always be free to pass through the notches of the disc and into the orifices which are also staggered circumferentially with relation to the notches. After passing through the orifices, the saliva will be drawn from the patient's mouth through the main suction tube. The discs prevent the

Solmetex Ex. 2040
Ascentcare Dental Products v. Solmetex - IPR2025-01104

Docusign Envelope ID: E9BA7F2F-5499-428A-96B4-B1C9082A1A93

flexible sleeve or boot from collapsing upon the terminal tube portion and closing the orifices thereof." EX1007, 3:36-48.

66. So, in the Baughan design, the discs "assume vertical positions" (see EX1007, 4:6 like the "waves" in the bridge structure 180 in the '970 Patent and are affixed to the suction tube. Within these vertical radial disks are notches similar to the "troughs" in the '970 Patent mouthpiece bridge structure. EX1007, 2:32-35. The notches create a rigid support to allow for fluid to pass through to an open end of the suction tube even if the flexible sleeve is compressed from oral tissues. Also, the vertical radial discs extend from the interior portion of the device and are not physically connected to the outer member, which is the sleeve.

D. **Johnson**

67. Johnson describes a device of similar nature to Baughan in that a "saliva ejector is formed of a flattened body having upper and lower portions, a suction passage being formed in the body and a plurality of apertures communicating with the passage." EX1008, 1:65-67. This saliva ejector device attaches to a suction hose typically found in dental offices. The plates are also "molded of a suitable rigid or semi-rigid plastic". EX1008, 4:24-27.

68. According to claim 1 of the Johnson patent, the device forms a "combined saliva ejector and tongue restraint adapted to be placed within the oral cavity between tongue and teeth, said ejector comprising, a flattened body having

Docusign Envelope ID: E9BA7F2F-5499-428A-96B4-B1C9082A1A93

upper and lower portions, said body including, first and second plates in face to face contiguity, at least of said plates being formed with a recess extending along a surface thereof that faces the other of said places to define a suction passage between said plates...said body being formed with a plurality of apertures communicating with said passage...” EX1008, 6:53-7:6.

69. Johnson also teaches multiple projections 81-86 formed on a flat surface of the saliva ejector. EX1008, 4:16-23, FIG. 3.

E. Hirsch

70. Hirsch discloses a mouthpiece with a central spine for added rigidity and anti-collapse support. EX1012, ¶ 78. This added rigidity helps in retracting cheek tissue because the added rigidity provides more memory force that pushes against cheek tissue based on position memory. *See* EX1005, 7:21-39. Thus, the spine assists in ensuring that the mouthpiece of Hirsch applies a proper amount of force to retract cheek tissue and prevent cheek tissue from interfering.

VIII. OPINION ON GROUNDS OF UNPATENTABILITY

A. Legal Principals of Obviousness

71. I have been told that under 35 U.S.C. § 103(a), a patent may not be obtained though the invention is not identically disclosed or described as set forth in Section 102, if the differences between the subject matter sought to be patented and the prior art are such that the subject matter as a whole would have been

Docusign Envelope ID: E9BA7F2F-5499-428A-96B4-B1C9082A1A93

obvious at the time the invention was made to a person having ordinary skill in the art to which said subject matter pertains.

72. When considering the issues of obviousness, I have been told that I am to do the following:

a. determine the scope and content of the prior art;

b. ascertain the differences between the prior art and the claims at issue;

c. resolve the level of ordinary skill in the pertinent art; and

d. consider evidence of secondary indicia of non-obviousness (if available).

73. I have been told that the relevant time for considering whether a claim would have been obvious to a POSA is the time of alleged invention.

74. I have been told that a reference may be modified or combined with other references or with the POSA's own knowledge if the person would have found the modification or combination obvious. A POSA is presumed to know all relevant prior art, and the obviousness analysis may consider the inferences and creative steps that a POSA would employ.

75. In determining whether a prior art reference could have been combined with another prior art reference or other information known to a person having ordinary skill in the art, I have been told that the following principals may be considered

Docusign Envelope ID: E9BA7F2F-5499-428A-96B4-B1C9082A1A93

a. a combination of familiar elements according to known methods is likely to be obvious if it yields predictable results;

b. the substitution of one known element for another is likely to be obvious if it yields predictable results;

c. the use of a known technique to improve similar items or methods in the same way is likely to be obvious if it yields predictable results;

d. the application of a known technique to a prior art reference that is ready for improvement is likely obvious if it yields predictable results;

e. any need or problem known in the field and addressed by the reference can provide a reason for combining the elements in the manner claimed;

f. a person of ordinary skill often will be able to fit the teachings of multiple references together like a puzzle; and

g. the proper analysis of obviousness requires a determination of whether a person of ordinary skill in the art would have a "reasonable expectation of success" – not "absolute predictability" of success – in achieving the claimed invention by combining prior art references.

76. I have been told that whether a prior art reference renders a patent claim unpatentable as obvious is determined form the perspective of a POSA. Further, I have been told that while there is no requirement that the prior art

Solmetex Ex. 2040
Ascentcare Dental Products v. Solmetex - IPR2025-01104

Docusign Envelope ID: E9BA7F2F-5499-428A-96B4-B1C9082A1A93

contain an express suggestion to combine known elements to achieve the claimed invention, a suggestion to combine known elements to achieve the claimed invention may come from the prior art as a whole or individually, as filtered through the knowledge of one skilled in the art. I have also been told that the inferences and creative steps a POSA would employ are also relevant to the determination of obviousness.

77. I have been told that when a work is available in one field, design alternatives and other market forces can prompt variations of it, either in the same field or in another. If a POSA can implement a predictable variation and would see the benefit in doing so, that variation is likely to be obvious. In many fields, there may be little discussion of obviousness combinations, and in these fields, market demand – not scientific literature – may drive design trends. When there is a design need or market pressure and there are a finite number of predictable solutions, a POSA has good reason to pursue those known options.

78. I have been told that there is no rigid rule that a reference or combination of references must contain a "teaching, suggestion, or motivation" to combine references. But I also have been told that the "teaching, suggestion, or motivation" test can be a useful guide in establishing a rationale for combining elements of the prior art. This test poses the question whether there is an express or

Docusign Envelope ID: E9BA7F2F-5499-428A-96B4-B1C9082A1A93

implied teaching, suggestion, or motivation to combine prior art elements in a way that yields the claimed invention and avoids impermissible hindsight analysis.

B. Ground 1: Claims 1, 9-13, 15-16, and 18 are obvious under 35 U.S.C. 103 by Park in view of Baughan and Johnson.

79. It is my opinion that Park in view of Baughan and Johnson teaches all of the limitations of claims 1, 9-13, 15-16, and 18.

1. Independent Claim 1

a. Preamble/Limitation 1(a): "A mouthpiece comprising:"

80. I have been informed by counsel that claim preambles are generally not a limitation when the content of the claimed preamble is an "intended use". I have been informed by counsel that preambles are generally statements of intended use when the body of a claim fully sets forth all the limitations of the claimed invention, and the preamble merely states the purpose or intended use of the invention. Here, the preamble merely states what the claimed mouthpiece is intended to do, i.e., be a mouthpiece.

81. Even if the preamble is limiting, Park discloses a mouth prop 100, which is a mouthpiece. EX1006, ¶¶ 25-26.

b. Limitation 1(b): "a main body portion configured as a pocket at least partially enclosing an interior space that extends from a first end to a second end of the main body portion, the pocket defined by:"

Docusign Envelope ID: E9BA7F2F-5499-428A-96B4-B1C9082A1A93

82. Park teaches a mouth prop 100 with the same general shape and configuration as Black (and many others in this dental isolation mouthpiece field). EX1006, FIG. 1-3. Park teaches a tongue retractor 130, which is the wider portion of the mouth prop 100 that fits in the patient's intraoral cavity. EX1006, ¶ 26. This retractor 130 is a main body portion. As shown in FIGs. 2-3, the tongue retraction portion extends from a first end (near the insertion port 110) to a second end (opposite end near concave portion 131).

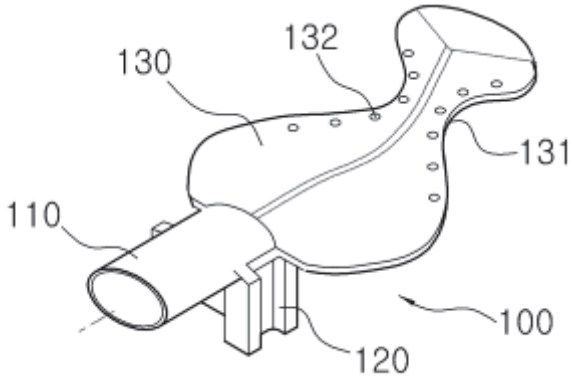

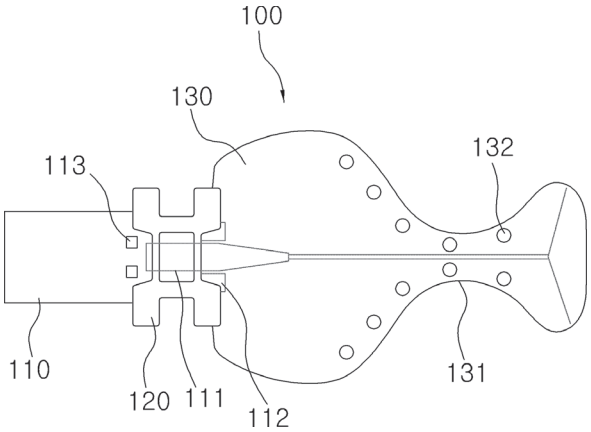

83. Interestingly, Park also discloses an enclosed mouth prop 100 with four sides: a posterior wall, an anterior wall, and sidewalls connecting the posterior wall to the anterior wall along the sides and ends of the tongue retractor 130 and a concave portion 131, which is a pocket and similar design as shown in the '970 Patent. EX1006, FIG. 2.

Solmetex Ex. 2040
Ascentcare Dental Products v. Solmetex - IPR2025-01104

Docusign Envelope ID: E9BA7F2F-5499-428A-96B4-B1C9082A1A93

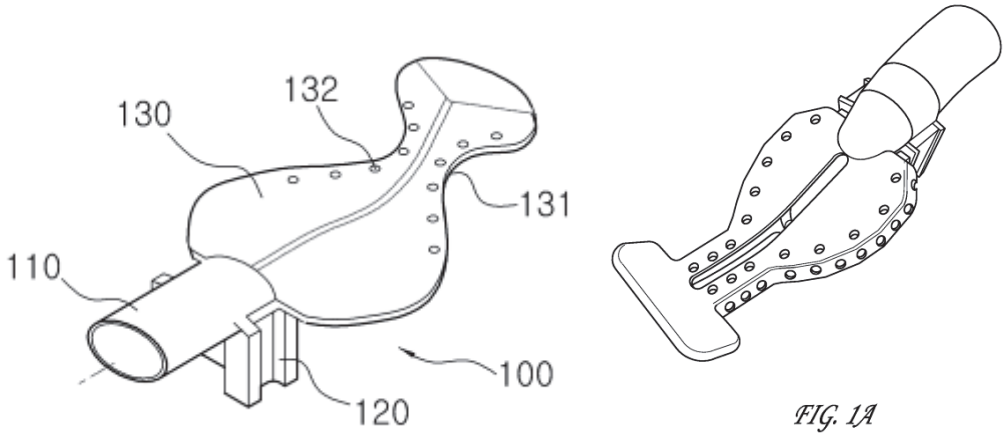

FIG. 1A

84. Park clearly shows an enclosed mouth prop 100 with sidewalls in FIGs. 1-3. Patent Owner may argue that the mouth prop 100 of Park is too thin to have an interior space, or that the mouth prop 100 of Park is just a single flap (i.e., one wall). However, a POSA would know that cannot possibly be the case because the mouth prop 100 of Park includes holes 132. EX1006, ¶ 31. Holes in a mouthpiece, like the one shown in Park, are formed for only one purpose: suction. This is particularly true considering that the holes are formed near the portion of the mouthpiece where a dental procedure would occur. EX1016, 2:13-20.

85. A POSA would know that dental mouthpieces having the well-known, and widely implemented, configuration of Park, Black, Hirsch, and the ’970 Patent are positioned in a patient’s mouth like this: the suction connector side (110 in Park) would extend out one side of the patient’s mouth (say, left side), and the cheek retractor side would extend into the patient’s opposite cheek (continuing my example, right cheek). Park shows this in FIG. 6.

Docusign Envelope ID: E9BA7F2F-5499-428A-96B4-B1C9082A1A93

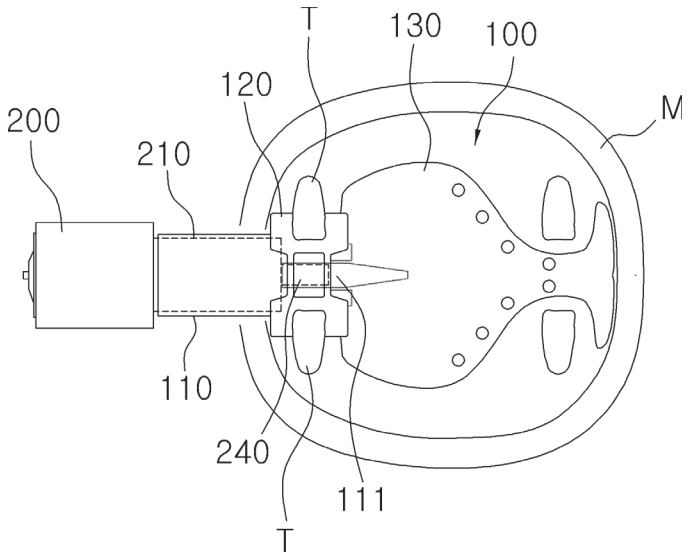

Once placed, it is the cheek retractor side where the operation (drilling, filling, sealing, etc.) occurs. EX1016, 2:13-20. The upper and lower ridges behind the patient's molars would engage Park's concave part 131, and the dentist would perform a dental procedure on a tooth or teeth on that side of the mouthpiece. EX1016, 2:13-20.

86. So, for example, if a patient had a cavity on his right, lower molar (tooth number, say 31), the doctor would insert the mouth prop 100 of Park such that the concave part 131 would fit between the patient's upper and lower ridges behind the patient's right molars while the patient's left molars would engage the bite block 120 of Park. In the example of a dental filling procedure, a dentist would constantly spray the teeth with water during the drilling process to keep the teeth from significantly rising in temperature due to the friction caused by drilling. EX1016, 1:6-10. A POSA would know that a significant rise in tooth temperature

Solmetex Ex. 2040
Ascentcare Dental Products v. Solmetex - IPR2025-01104

Docusign Envelope ID: E9BA7F2F-5499-428A-96B4-B1C9082A1A93

could damage the underlying nerve, which might require a root canal treatment to repair. The spraying water splashes due to ejection from an air/water syringe and from the drill. Not only water, but also tooth material or blood can spray from drilling and other dental operations. Thus, a POSA would know to place suction holes near the location of the dental operation as this location is where most of the fluid and debris is being generated, and which need to be removed from the patient's oral cavity, which is exactly where Park placed holes.

87. If the holes 132 were simply holes, unconnected from the suction ports 112, these holes would serve no actual purpose. In fact, they would allow fluid and debris to pass through and into the throat of a patient: the specific thing that Park seeks to avoid. EX1006, ¶ 12. A POSA would further know that allowing any fluid or debris down a patient's throat or airway would cause patient discomfort or serious risk and should be prevented. EX1019, 4:16-21. Moreover, if the suction ports 112 did not suction through an interior chamber of the mouth prop 100 fluidly connected to the holes 132, then the suction ports 112 would be extremely inefficient, basically tasked with aspirating the entire oral cavity. Also, the positioning of the suction ports 112 would be located in the worst possible location, furthest from the location where unwanted fluid would accumulate due to the dental procedure. A POSA would know that a suction port is most efficient when positioned immediately adjacent to the fluid that should be aspirated.

Docusign Envelope ID: E9BA7F2F-5499-428A-96B4-B1C9082A1A93

88. Park teaches holes 132 that are formed on and near the concave area 131 (where the dental operation would occur). This positioning of the holes 132 is also far from the suction ports 112.

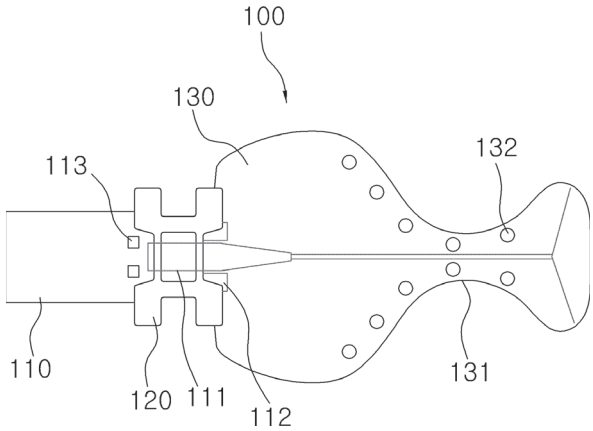

A POSA, knowing that suction is applied through the ports 112, would know that there is a fluid connection between the ports 112 and the holes 132 because the holes 132 must offer openings for suction of unwanted fluids, debris, etc. from the oral cavity. EX1006, ¶ 28. The only efficient fluid connection between the suction ports 112 and the holes 132 would be an interior cavity formed within the four walls of Park's mouth prop 100. Thus, a POSA looking at FIG. 2 would see the through holes 132 and the depicted sidewalls and know that there must be an interior chamber inside the mouth prop that provides a low-volume space that fluidly connects the holes 132 to the suction ports 112.

89. Additionally, I note that the specification of Park explains that the insertion port 110 extends into the tongue retractor 130, and only one side of the

Solmetex Ex. 2040
Ascentcare Dental Products v. Solmetex - IPR2025-01104

Docusign Envelope ID: E9BA7F2F-5499-428A-96B4-B1C9082A1A93

insertion port 110 is open. EX1006, FIG. 3, ¶¶ 27-28. If only one side of the insertion port 110 is open, then a POSA would understand that the other side is closed by the four walls of the tongue retractor 130. FIG. 3, which shows the suction ports 112 extending into the tongue retractor 130, further supports this conclusion.

90. Also, I note that the color of the lines representing the suction ports is slightly lighter than the lines denoting, for example, the edges of the mouth prop. A POSA would understand that this lighter shading indicates that these components are internal, and not completely visible from the exterior of the mouth prop 100. Or, they may be partially visible, since the mouth prop comprises clear silicone. EX1006, ¶ 32. I note that this difference in shading color was visible when I looked at Park on a computer screen. When I printed a copy of Park, the contrast was not easily detectable.

91. Furthermore, Park never mentions that suction can occur through the superior or inferior sides of the mouthpiece. In fact, looking at the mouth prop 100 in the figures, a POSA would know that suction only occurs at the holes 132.

92. The only logical reason why Park includes holes 132 is to provide inlets for suction, and the only way that the holes 132 can provide inlets for suction is to be fluidly connected to the suction ports 112, and the only way that the holes 132 can be efficiently fluidly connected to the suction ports 112 (i.e. no significant

Docusign Envelope ID: E9BA7F2F-5499-428A-96B4-B1C9082A1A93

loss in suction) is through an interior chamber formed within the mouth prop 100. I have been informed by counsel that when a prior art reference clearly suggests a teaching to a POSA, then the prior art reference implicitly teaches that teaching. Here, a POSA would understand that Park, at worst, implicitly teaches a four-sided mouthpiece enclosing an interior space that fluidly connects the suction ports 112 to the holes 132.

93. Finally, to the extent Patent Owner argues that Park fails to teach sidewalls, a POSA would see that Park clearly depicts sidewalls in FIG. 2.

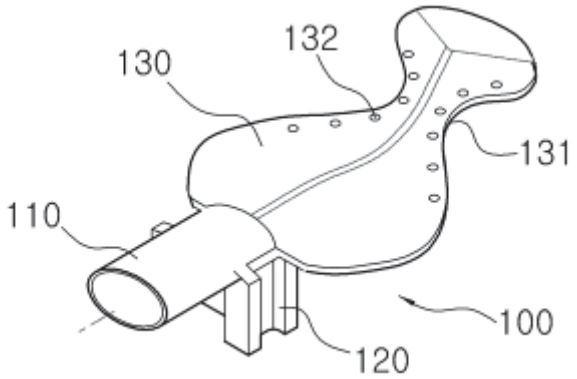

FIG. 2 shows a closed, continuous edge formed around the sides of the mouth prop 100. Indeed, the sidewall depicted even extends into the teeth support section 120 and the insertion port 110. The continuous wall shown extends from the sidewalls into the insertion port 110/teeth support section 120, thereby clearly depicting a continuous sidewall around the entire mouth prop 100.

Docusign Envelope ID: E9BA7F2F-5499-428A-96B4-B1C9082A1A93

c. **Limitation 1(c): "a first wall extending from the first end to the second end, wherein the first wall is narrower at the second end than at the first end,"**

94. Park teaches a first wall that extends from the first end to the second end of the tongue retractor 130. EX1006, FIG. 2. A POSA would know that every wall (unless perfectly circular) would extend from a first end (near insertion port 110) to a second end (near concave portion 131). Park also teaches that the first wall has holes 132, which are openings into the interior open space of the tongue retractor 130. EX1006, ¶ 31.

95. The first wall is the anterior wall best seen by FIG. 2.

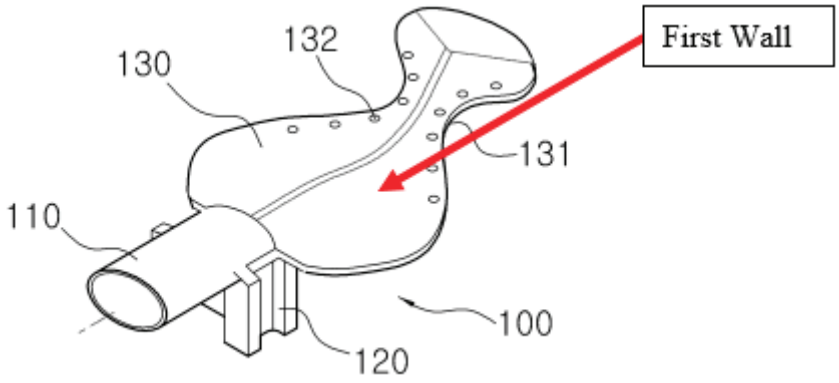

96. Park shows that the tongue retractor 130 is wider at the end nearest to the insertion port 110 than the concave area 131. EX1006, FIG. 3.

Docusign Envelope ID: E9BA7F2F-5499-428A-96B4-B1C9082A1A93

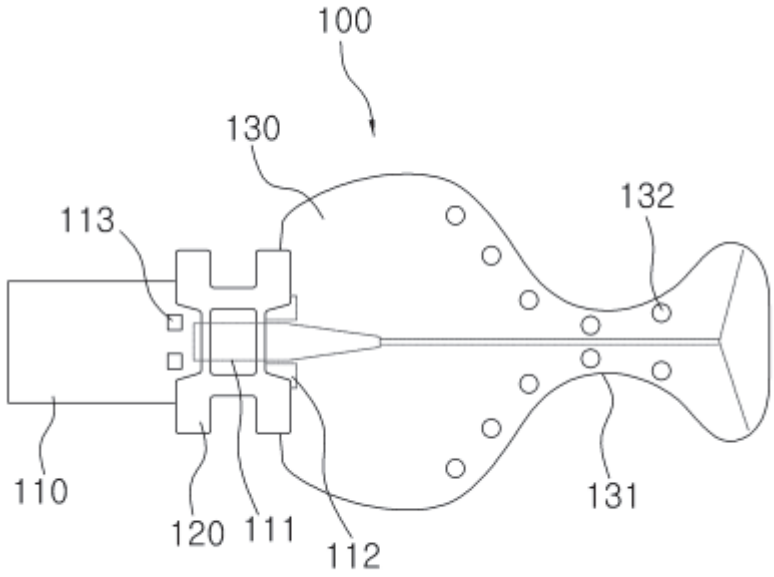

.

d. **Limitation 1(d): "a second wall located at a distance from the first wall and extending from the first end to the second end, wherein the second wall is also narrower at the second end than at the first end,"**

97. Park teaches a second wall identical in shape and size to the first wall. EX1006, FIGs. 2, 3. Since the second wall is identical to the first wall, it also extends from the first end to the second end and is narrower at the second end (near concave portion 131) than the first end (near insertion port 110).

98. Finally, as best shown in FIG. 2, the anterior (first) wall is separated from the posterior (second) wall by the formed sidewalls, and as discussed above in paragraphs 82-92, Park's mouth prop includes an interior chamber. Thus, the second wall is located a distance from the first wall.

Docusign Envelope ID: E9BA7F2F-5499-428A-96B4-B1C9082A1A93

99. The second wall is the posterior wall best seen by FIG. 3.

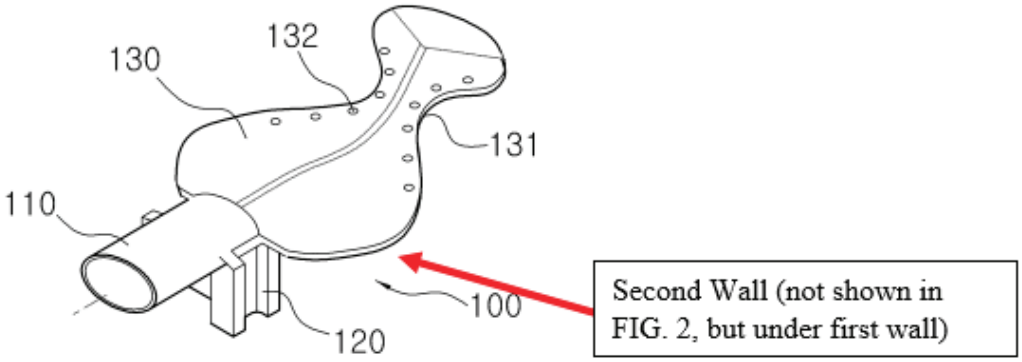

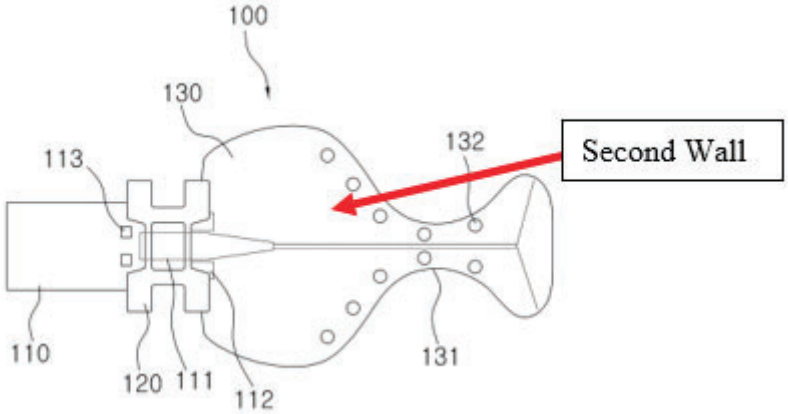

e. **Limitation 1(e): "the second wall comprising a bridge structure that includes a plurality of protrusions integral with and protruding from an interior surface of the second wall and extending across the distance between the first wall and the second wall, wherein the bridge structure is not attached to the first wall,"**

100. Park is primarily focused on elements of the mouth prop related to lighting. EX1006. ¶¶ 1, 5-8. As such, Park fails to expressly describe or illustrate whether the mouth prop 100 includes any internal features that assist with suction or preventing collapse under suction. Park also notes that its description omits that which is conventional, such as anti-collapse structure. EX1006, ¶ 22. Park does

Solmetex Ex. 2040
Ascentcare Dental Products v. Solmetex - IPR2025-01104

Docusign Envelope ID: E9BA7F2F-5499-428A-96B4-B1C9082A1A93

illustrate what appears to be a light pipe extending through the mouth prop 100 (highlighted below), but it is unclear whether this is structural or simply something to assist with lighting.

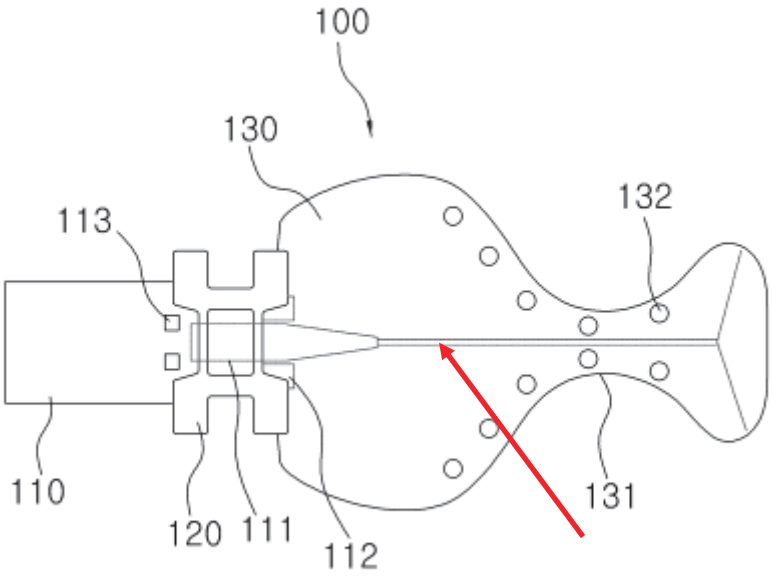

101. Nevertheless, Park does teach that suction occurs through the mouth prop 100 between the suction ports 112 and the holes 132. EX1006. ¶¶ 28, 43, 51. As explained above, a POSA would understand that a fluid connection exists through an interior chamber of the mouth prop 100 between the suction ports 112 and the holes 132.

102. Knowing that suction pulls air and foreign substances through the holes and out the suction ports 112, a POSA would know that the anterior and posterior walls (first and second walls) are likely to collapse into each other due to

Docusign Envelope ID: E9BA7F2F-5499-428A-96B4-B1C9082A1A93

the suction force applied by the external suction device 300. EX1006. ¶¶ 28, 42-43, 51; EX1007, 3:46-48. This is particularly true given how thin Park's mouth prop 100 appears and because the mouth prop is made of soft, flexible material. EX1006, ¶¶ 32, 34. A POSA would recognize this tendency to collapse because Park explains that the mouth prop 100 is made of silicone with "excellent tactile properties as well as a predetermined elasticity". *Id*. Further still, a POSA would know that the mouth prop would tend to collapse at weak spots of the mouth prop because dental isolation mouthpieces must be folded into a patient's mouth for insertion, and the roof and floor of a patient's mouth would cause bending across the longitudinal axis of the mouthpiece. EX1005, 19:53-20:2, 2:15-20. The sidewalls would assist with preventing collapse under suction, but a POSA would know that there would still be weak points in the mouth prop 100 where collapse would occur under suction. A POSA would know that the locations most likely to collapse would be places furthest from anti-collapsing structure, such as sidewalls or a spine (if it exists). Looking at FIG. 3, a POSA would know that the two areas highlighted in red are most likely to collapse.

Solmetex Ex. 2040
Ascentcare Dental Products v. Solmetex - IPR2025-01104

Docusign Envelope ID: E9BA7F2F-5499-428A-96B4-B1C9082A1A93

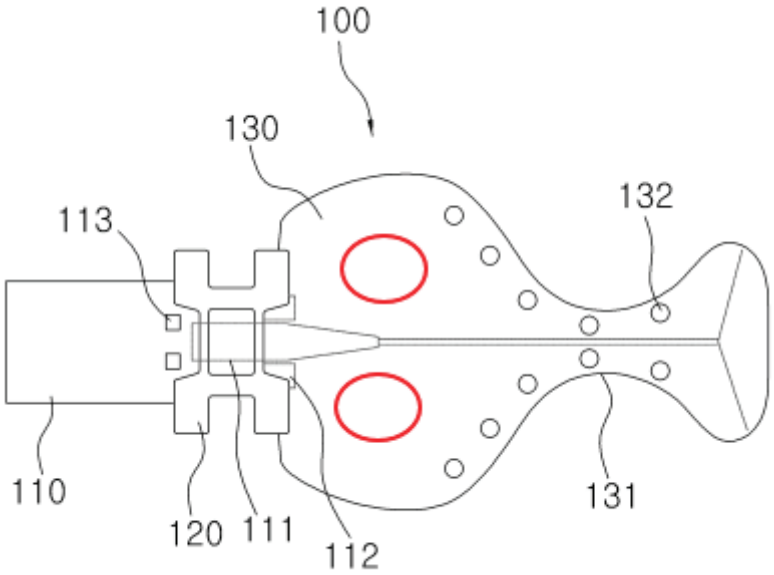

103. The above assumes that there is a spine running down the symmetrical axis of the mouthpiece. If there were no spine, and the line depicted above is simply reflective material or the light for lighting purposes (a reasonable conclusion given that the line is not depicted in FIG. 6), then the weakest point would be in the center of the tongue retractor 130, which is highlighted in red below:

Docusign Envelope ID: E9BA7F2F-5499-428A-96B4-B1C9082A1A93

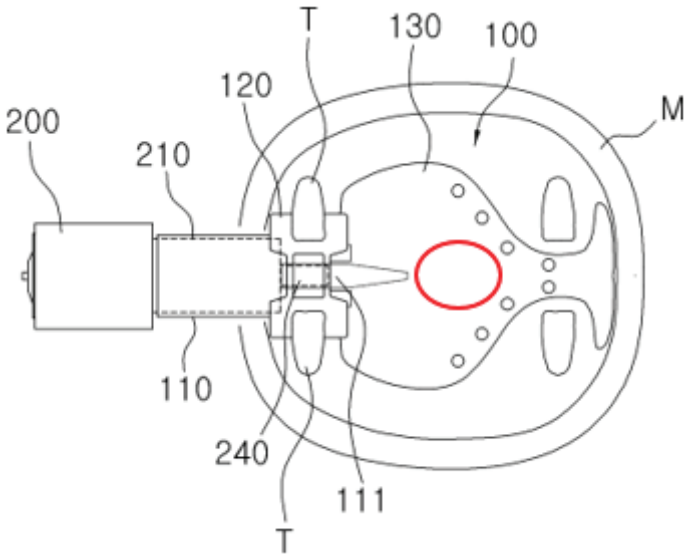

104. Even if the areas identified above do not completely collapse, they may significantly narrow under suction due to the flexible nature of the mouth prop 100. EX1006, ¶ 32, 34. A POSA would recognize that a flexible, silicone mouth prop 100 would have weak spots that collapse or significantly narrow under suction, and a POSA would have been motivated to prevent complete collapse or significant narrowing at weak parts of the mouth prop using known anti-collapse structure. EX1007, 3:43-48. Indeed, preventing collapse would be applying a known technique (anti-collapse structure) to a known device ready for improvement (the mouth prop 100 of Park) to yield predictable results (preventing collapse at weak parts of the mouth prop 100 under suction).

105. Baughan teaches well-known anti-collapse structure in the form of outward projecting, spaced apart elements that provide a force opposite the suction

Docusign Envelope ID: E9BA7F2F-5499-428A-96B4-B1C9082A1A93

force and still allow suction channels by spacing apart the elements. EX1007, 3:43-48. Baughan teaches a suction tube 15 and a sleeve 24 to fits over the suction tube 15.

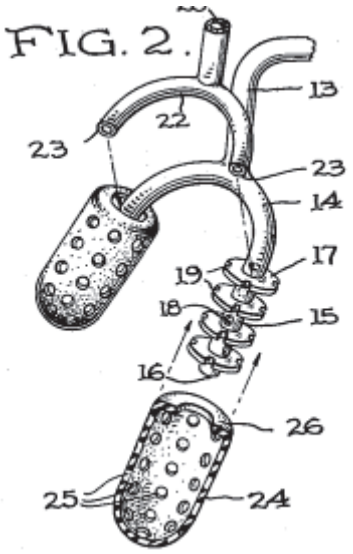

To prevent the flexible sleeve 24 from collapsing upon the tube 15, Baughan teaches three spaced-apart discs 17 that extend perpendicularly from the tube 15. EX1007, 2:19-25, 2:51-55, 3:43-48. The discs 17 engage the sleeve and apply an anti-collapse force on the sleeve 24, thereby preventing its collapse under suction. *Id.* The three discs are a plurality of protrusions protruding from an interior surface of the tube and extending a span between the tube 15 and the sleeve 24. Moreover, Baughan specifically teaches that the discs 17 are not attached to the sleeve 24, but merely contact the sleeve 24. EX1007, 2:19-25, 2:51-61.

Solmetex Ex. 2040
Ascentcare Dental Products v. Solmetex - IPR2025-01104

Docusign Envelope ID: E9BA7F2F-5499-428A-96B4-B1C9082A1A93

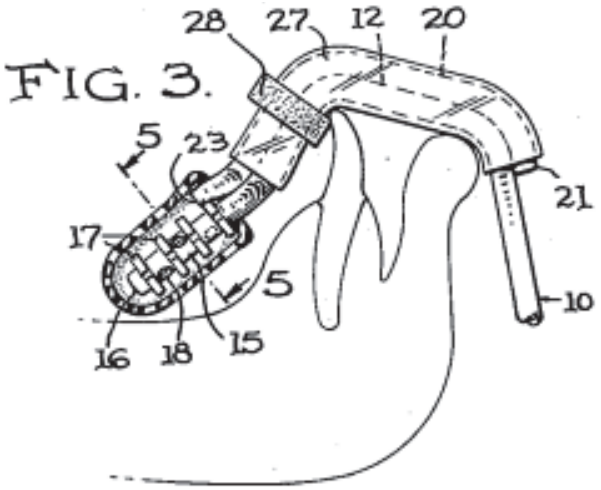

Thus, Baughan teaches a bridge structure (discs 17) that includes a plurality (3) of protrusions protruding from an interior surface of the second wall (tube 15) and extending a span between the second wall (tube 15) and the first wall (sleeve 24), and the bridge structure (discs 17) is not attached to the first wall (sleeve 24).

106. Baughan teaches an anti-collapse structure for a cylindrical, tube-shaped implementation. In this context, circular discs 17 make perfect sense. However, Baughan teaches that the discs are formed at a right angle to the tube 15. EX1007, 2:23-25. So, Baughan stands for the proposition that upward projecting elements at right angles to an underlying wall prevent collapse from a covering wall. EX1007, 2:19-25, 2:51-55, 3:43-48. Using only common sense, a POSA would know to convert the discs into basic flat projections for a non-tube implementation. Even though basic common sense is all that is required to apply the cylindrical anti-collapse structure to a flat anti-collapse structure, other prior art

Docusign Envelope ID: E9BA7F2F-5499-428A-96B4-B1C9082A1A93

teach exactly how to form such projections. For example, Johnson shows how to form projections 81-86 on a flat surface 40 for dental application. EX1008, FIG. 3.

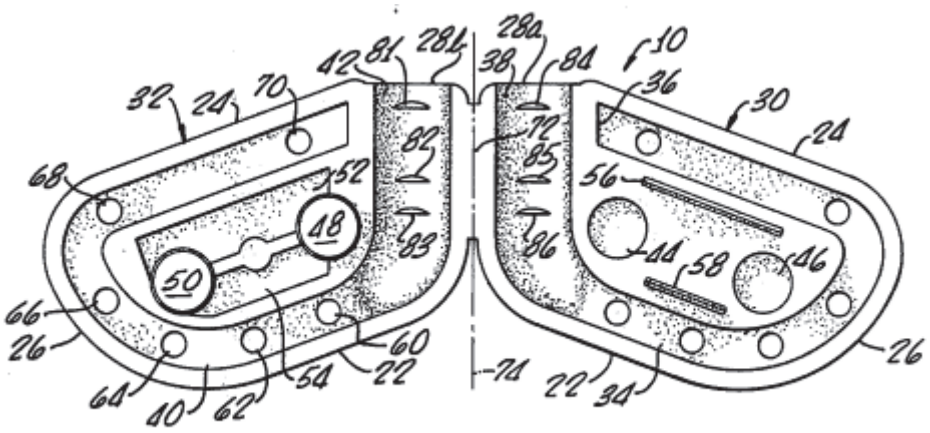

FIG. 3.

Johnson explains that the projections are molded onto interior surfaces of neck sections 28a/b. EX1008, FIG. 3, 4:16-23. Moreover, to the extent Patent Owner argues that the discs 17 of Baughan are not "integral with" the interior surface of the second wall, Johnson teaches injection molded projections 81-86 which are unequivocally integral to the interior surface of the neck sections 28a/b. Regardless, I am informed by counsel that making something integral is simply an obvious design choice that cannot be the basis of a patentable invention.

107. I should note that the discs 17 are essentially the exact same concept I taught in Black when I taught the transverse walls. The transverse walls were formed perpendicularly to the underlying wall, and prevented collapse under suction. EX1005, 5:54-59. The only difference was that my transverse walls also

Docusign Envelope ID: E9BA7F2F-5499-428A-96B4-B1C9082A1A93

connected the posterior and anterior walls. EX1005, 5:24-28. Using sidewalls, like in Park, would equally connect those walls, which would mean that simple projections, rather than walls connected to two perpendicular walls, could accomplish the same anti-collapse function. Projections formed this way (connected to only one wall) would be a far easier device to form when sidewalls also connect at the edges of the device.

108. Applying the teachings of Baughan and Johnson, which are very old and clearly conventional (disclosed in the 1960s and 70s), a POSA could have easily included a plurality of spaced apart projections integrally formed on the posterior wall of Park to prevent collapsing of the posterior and anterior wall under suction at the weakest points of the mouth prop 100, which is shown above in the tongue retractor 130. The result of adding projections to weak spots of Park would look like this:

Docusign Envelope ID: E9BA7F2F-5499-428A-96B4-B1C9082A1A93

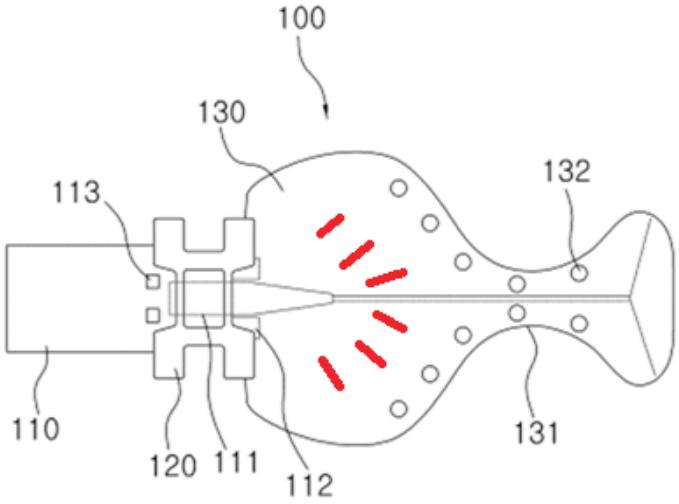

A POSA would know that the projections could be formed at any angle, including parallel to the lighting line running through the symmetrical axis of the mouthpiece. A POSA would further know that aligning the projections with the locations of the holes 132 would form a convergent flow, which would best allow for suction through the suction ports 112. EX1005, 8:21-39.

109. A POSA would have expected success in adding spaced-apart projections to the weak points of Park because these basic and conventional features were well-known to prevent collapse while still forming channels for suction between the projections. This is exactly what Baughan taught. EX1007, 2:19-25, 2:51-55, 3:43-48. Addition of spaced-apart projections to the weak spots of Park would have predictably prevented collapse or significant, restrictive narrowing of suction at weak points of the mouth prop 100 of Park while still

Solmetex Ex. 2040
Ascentcare Dental Products v. Solmetex - IPR2025-01104

Docusign Envelope ID: E9BA7F2F-5499-428A-96B4-B1C9082A1A93

forming suction channels between the formed projections. The combination of Baughan/Johnson to Park would be applying a known technique (anti-collapse structure) to a known device ready for improvement (the mouth prop 100 of Park) to yield predictable results (preventing collapse at weak parts of the mouth prop 100 under suction) or combining prior art elements (a mouth prop having an interior chamber) according to known methods (using spaced-apart projections to prevent collapse under suction) to yield predictable results (the projections would prevent collapse under suction and still allow for suction channels therebetween).

110. I mentioned above the projections could be formed on the posterior wall, but a POSA would know that the projections could be formed just as easily on the anterior wall. It makes no difference which wall receives the projections so long as the projections remain spaced apart and project toward the opposite wall. For example, a POSA would understand that the sleeve 24 of Baughan could just as easily include circular discs extending from the sleeve 24 and unconnected to the tube to serve the same function. Moreover, the size of the projections could be adjusted to ensure proper flow and anti-collapse, as I have been informed by counsel that changes in size/proportion are generally not patentable changes.

111. So, it would have been obvious to include an anti-collapse bridge structure having a plurality of protrusions connected only to a second wall and spanning toward the first wall in the mouth prop of Park in view of the basic and

Solmetex Ex. 2040
Ascentcare Dental Products v. Solmetex - IPR2025-01104

Docusign Envelope ID: E9BA7F2F-5499-428A-96B4-B1C9082A1A93

well-known teachings of Baughan and Johnson to predictably result in the mouth prop 100 having projections formed in weak spots shown above.

f. **Limitation 1(f): "and wherein the plurality of protrusions of the bridge structure protrude from the interior surface of the second wall in a wave shape comprising one or more crests and one or more troughs, and,"**

112. The spaced-apart discs 17 of Baughan protrude from a surface of the tube 15 in a wave shape with three crests (rings) and at least two troughs (space between rings). EX1007, FIG. 3 (annotated). A square wave shape is a wave-shape.

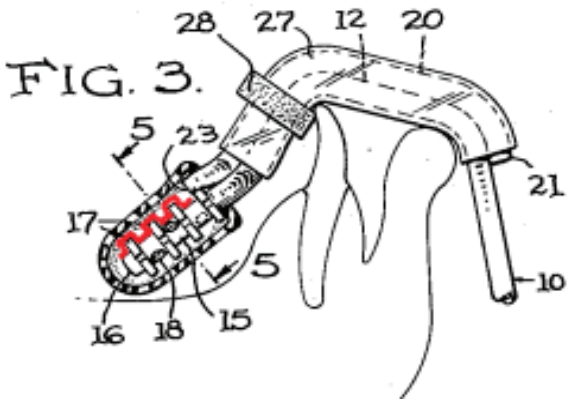

g. **Limitation 1(g): "a connecting wall that connects one or more edges of the first wall to one or more corresponding edges of the second wall across the distance between the first wall and the second wall"**

113. Park shows a sidewall that connects to the anterior wall and the posterior wall across the distance between these two walls. EX1006, FIG. 2.

Docusign Envelope ID: E9BA7F2F-5499-428A-96B4-B1C9082A1A93

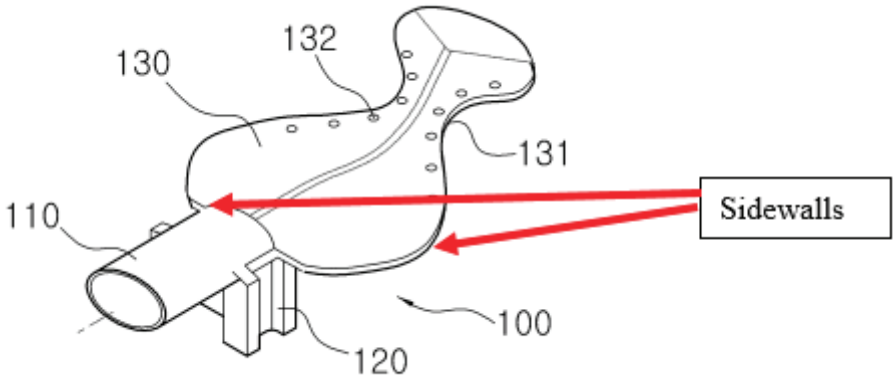

h. **Limitation 1(h): "a suction connector extending from the first end of the main body portion and integral to the main body portion, the suction connector including a cavity extending longitudinally from the main body portion, the cavity in communication with the interior space of the pocket and extending from a first opening of the suction connector at the first end of the main body portion and through a length of the suction connector towards a suction port opening opposite from the main body portion; and"**

114. Park teaches that an insertion port 110 connects the interior space, via suction ports 112, to a device body 200, and the device body 200 includes a suction line 260 that connects to an external suction device 300. EX1006, ¶¶ 26-27, 42. Park explains that the mouth prop 100 suctions fluids through the suction ports, which are connected to the holes 132 through the interior space of the mouth prop 100, which I explained above. EX1006, ¶¶ 31, 43.

115. Park teaches a mouth prop formed in one piece. EX1006, ¶ 32. Park explains that the mouth prop 100, as a whole, is detachable from the device body

Docusign Envelope ID: E9BA7F2F-5499-428A-96B4-B1C9082A1A93

200 and sterilized as one piece. EX1006, ¶ 53. Thus, a POSA would understand that the entire mouth prop 100 is formed as one piece.

116. Park shows that the insertion port 110 extends form the first end of the main body portion. EX1006, Abstract. Park explains that the insertion port 110 is connected to the tongue retractor 130, and Park shows that the mouth prop 100 is all one piece, which teaches an integral connection between the tongue retractor 130 and the insertion port 110. EX1006, ¶ 26. Regardless, I am told making a connection integral is cannot be the basis for a patentable invention.

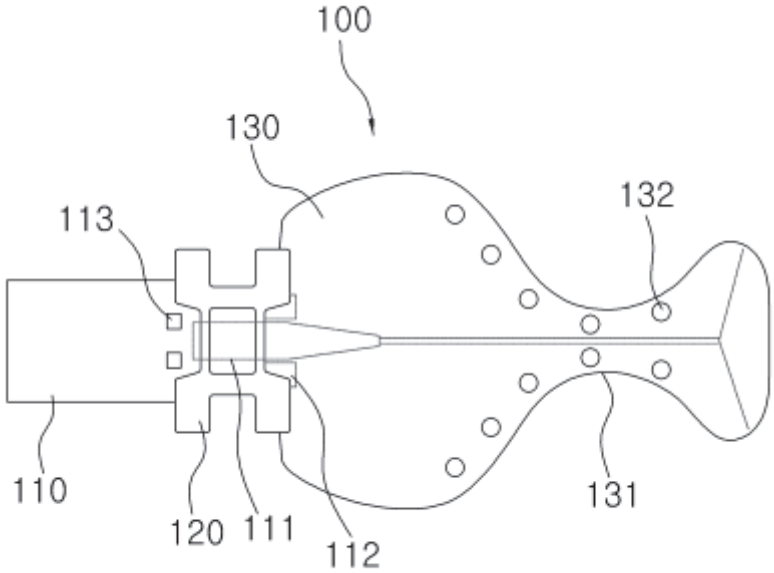

117. Park teaches that the insertion port 110 is hollow, which means that the insertion port 100 has a cavity extending longitudinally from the tongue retractor 130. EX1006, ¶ 27. Park further teaches that the insertion port has an

Docusign Envelope ID: E9BA7F2F-5499-428A-96B4-B1C9082A1A93

open end, and that the insertion port 110 connects to suction ports 112 that are shown as extending into the tongue retractor 130. EX1006, ¶¶ 27-28. Thus, Park teaches exactly the suction connector described by this claim limitation.

i. **Limitation 1(i): "a mouth prop molded in one piece, and wherein the suction connector extends through and past the mouth prop."**

118. Park teaches a tooth support section 120 that engages a patient's teeth as a bite block. EX1006, ¶ 29, 32, 54, Abstract, FIG. 1-3. This tooth support section 120 is formed as one piece with the rest of the mouth prop 100. *Id.*

119. FIG. 3 of Park shows the insertion port extending through the tooth support section 120. (Suction ports 112 extend past the tooth support section into the tongue retractor 130)

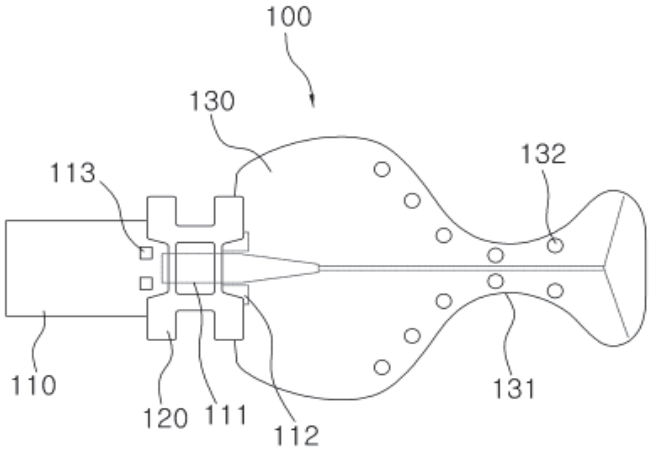

120. Therefore, claim 1 is obvious over Park in view of Baughan and Johnson.

Docusign Envelope ID: E9BA7F2F-5499-428A-96B4-B1C9082A1A93

2. **Claim 9: "9. The mouthpiece of claim 1, wherein the suction connector comprises a cutout corresponding to a protrusion on a vacuum adapter for an interlocking fit."**

121. Park teaches a projection hole 1113 formed such that a locking projection 211 formed on the adapter can pass downward through it. EX1006, ¶ 35. A POSA would understand that these holes 113 for receiving a projection on the vacuum adapter 200 is an interlocking fit.

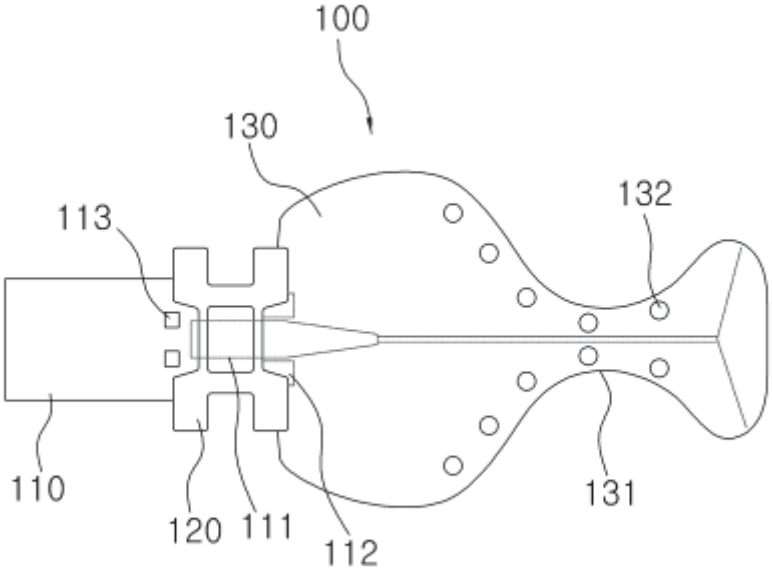

3. **Claim 10: "10. The mouthpiece of claim 1, wherein the suction connector connects the interior of the pocket to a vacuum source, wherein activation of the vacuum source provides suction of fluids from the interior of the pocket toward the vacuum source."**

Solmetex Ex. 2040
Ascentcare Dental Products v. Solmetex - IPR2025-01104

Docusign Envelope ID: E9BA7F2F-5499-428A-96B4-B1C9082A1A93

122. Park teaches that the insertion port 110 and the suction ports 112 connect the interior of the mouth prop 100 to a vacuum source, and that activation of the vacuum source suctions fluids. EX1006, ¶¶ 33, 41-43, 51.

4. **Claim 11: "11. The mouthpiece of claim 1, wherein at least one of the first wall, the second wall, or the connecting wall comprise a plurality of perforations."**

123. Park illustrates holes 132 formed on both the anterior wall and the posterior wall. EX1006, FIGs 2-3. Thus, Park teaches perforations formed on the first and second walls. The tongue retractor 130 includes a plurality of holes 132. EX1006, ¶ 31. A POSA would understand that these holes 132 are perforations.

5. **Claim 12: "12. The mouthpiece of claim 11, wherein activation of a vacuum source associated with suction connector extending from the first end of the main body portion draws fluids from an exterior of the main body portion through one or more of the plurality of perforations into the interior space of the pocket of the main body portion."**

124. As explained above, Park teaches holes 132 for the sole purpose of suctioning fluids generated during a dental procedure. See paragraphs 84-88. Park also teaches that activation of a vacuum source removes fluids and debris from the intraoral cavity. EX1006, ¶¶ 33, 41-43, 51.

6. **Claim 13: "13. The mouthpiece of claim 1, further comprising a cheek retractor portion connected to the main body portion and having a surface that applies pressure when bent, wherein the pressure is based on resilience of the cheek retractor portion."**

Docusign Envelope ID: E9BA7F2F-5499-428A-96B4-B1C9082A1A93

125. Park explains that the cheek retractor end of the mouth prop 100 keeps cheek tissue away from the operation space when bent. EX1006, ¶ 31. Park explains that the mouth prop 100 comprises a flexible silicone having "excellent tactile properties as well as a predetermined elasticity. EX1006, ¶ 32. A POSA would understand that the elasticity would retract the cheek tissue. A POSA would understand that elasticity and "resiliency" are essentially synonymous concepts when describing how an elastic device can retract cheek tissue.

7. Claim 15: "15. The mouthpiece of claim 1, wherein the main body portion is formed by injection-molding as one piece."

126. Park teaches a mouth prop formed in one piece. EX1006, ¶ 32. Park explains that the mouth prop 100, as a whole, is detachable from the device body 200 and sterilized as one piece. EX1006, ¶ 53. Thus, a POSA would understand that the mouth prop 100 is formed as one piece.

127. Park explains that the mouth prop comprises silicone. EX1006, ¶ 32. A POSA would know that silicone is most commonly formed by injection molding. This is a very, very common process, and has been for a long time. EX1008, 5:20-22. To the extent Patent Owner argues that Park is silent regarding injection molding or that injection molding is not an obvious manufacturing method, Johnson suggests injection molding and it would have been obvious to form Park's mouth prop 100 using injection molding in view of Johnson. *Id.*

Docusign Envelope ID: E9BA7F2F-5499-428A-96B4-B1C9082A1A93

8. **Claim 16: "16. The mouthpiece of claim 1, wherein a material that forms the main body portion is a flexible, translucent, high heat-resistant, autoclavable silicone-based material."**

128. Park teaches a flexible, transparent, autoclavable, silicone material. EX1006, ¶¶ 32, 49. A POSA would know that silicone is high heat-resistant because it is autoclavable.

9. **Independent Claim 18**

a. **Preamble/Limitation 18(a): "A mouthpiece comprising:"**

129. See paragraph 81.

b. **Limitation 18(b): "a main body portion configured as a pocket at least partially enclosing an interior space that extends from a first end to a second end of the main body portion, the pocket defined by:"**

130. See paragraphs 82-92.

c. **Limitation 18(c): "a first wall extending from the first end to the second end, the first wall having an interior surface facing the interior space of the pocket, and"**

131. See paragraphs 94-96.

132. As explained in paragraphs 82-92, Park's mouth prop 100 includes an interior open space, which means that the anterior wall has an interior surface since the wall must have a surface creating the interior open space.

d. **Limitation 18(d): "a second wall located at a distance from to the first wall and extending from the first end to the second end, the second wall having an interior surface facing the interior surface of the first wall,"**

Docusign Envelope ID: E9BA7F2F-5499-428A-96B4-B1C9082A1A93

133. See paragraphs 97-99.

134. As explained in paragraphs 82-92, Park's mouth prop 100 includes an interior open space, which means that the posterior wall has an interior surface since the wall must have a surface creating the interior open space.

e. **Limitation 18(e): "the second wall comprising a bridge structure that includes a plurality of protrusions integral with and protruding from the interior surface of the second wall and extending across the distance between the first wall and the second wall, wherein the bridge structure is not attached to the first wall, and wherein the plurality of protrusions of the bridge structure protrude from the interior surface of the second wall in a wave shape comprising one or more crests and one or more troughs, and"**

135. See paragraphs 100-112.

f. **Limitation 18(f): "a connecting wall that connects one or more edges of the first wall to one or more corresponding edges of the second wall across the distance between the first wall and the second wall;"**

136. See paragraph 113.

g. **Limitation 18(g): "a mouth prop molded in one piece and located at the first end of the main body portion; and"**

137. See paragraph 118.

h. **Limitation 18(h): "a suction connector integral with the main body portion and extending from the first end of the main body portion past the mouth prop, wherein the suction connector includes a cavity in communication with the interior space of the pocket."**

Docusign Envelope ID: E9BA7F2F-5499-428A-96B4-B1C9082A1A93

138. See paragraphs 114-117

139. Therefore, claim 18 is obvious over Park in view of Baughan and Johnson.

140. Therefore, claim 1, 9-13, 15-16 and 18 are all obvious over Park in view of Baughan and Johnson.

C. Ground 2: Claims 2-4, 7-8, and 17 are obvious under 35 U.S.C. 103 by Park in view of Baughan, Johnson, and Black.

1. Claim 2: "2. The mouthpiece of claim 1, wherein the mouth prop comprises a bite block portion and a strap portion, wherein the strap portion corresponds to a circumference of the suction connector, wherein a cross section of an opening of the strap portion is parallel to the cross section of the first opening of the suction connector and parallel to the cross section of the suction port opening, wherein a first edge and a second edge of an external surface of the strap portion are adjacent to an external surface of the suction connector, wherein the first edge is opposite the second edge, and wherein the strap portion is injection-molded in a single piece with the bite block portion."

141. Black teaches a bite member 310 that includes a circular conduit 312. EX1005, 12:10-26, FIGs. 19 and 20B. The conduit 312 corresponds to a circumference of the neck 346 and the cross-section of the opening of the conduit 312 is parallel to the cross-section of opening of the neck 346. *Id.* Thus, the bite member 310 is a bite block portion, and the conduit 312 is a strap portion, precisely as claimed.

Docusign Envelope ID: E9BA7F2F-5499-428A-96B4-B1C9082A1A93

142. In addition, the conduit 312 has two opposite edges (proximal end 312b and distal end 312a) that are adjacent to the external surface of the edge. EX1005, 12:10-26, FIG. 18.

143. Lastly, the bite member 310 and the conduit are injection molded as one piece. EX1005, 12:27-36.

144. A POSA would have been motivated to make the tooth support section 120 of Park removable to accommodate different sized mouths so that one bite block of one size could be replaced by a second bite block of another size. EX1005, 9:36-38, 9:50-52. A POSA would have expected success in making the tooth support section 120 of Park removable because Black taught a removable bite block in a dental isolation mouthpiece, and the necessary structure to accomplish a detachable bite block.

2. **Claim 3: "3. The mouthpiece of claim 2, wherein the strap portion is elastic."**

145. Black teaches bite member 310 and conduit 312 comprising an elastic material. EX1005, 8:64-9:2, 9:38-49, 12:27-36.

3. **Claim 4: "4. The mouthpiece of claim 2, wherein an external surface of the suction connector comprises a notch region corresponding to the strap portion, the notch region separating the external surface into a first surface and a second surface and defining an interior surface coupled to the first surface by a first side wall and coupled to the second surface by a second side wall."**

Docusign Envelope ID: E9BA7F2F-5499-428A-96B4-B1C9082A1A93

146. Black teaches a removable bite block having a groove 311 formed within a wall of the bite member's conduit 312, and the groove 311 receives a projection 344 formed on the neck of the tongue shield aspirator 340, which is a suction connector. EX1005, 15:36-51. The projection 344 (notch) separates the neck 346 into three surfaces: a surface illustrated below the projection 344, a surface of the projection 344, and a surface illustrated above the projection 344. FIG. 23B.

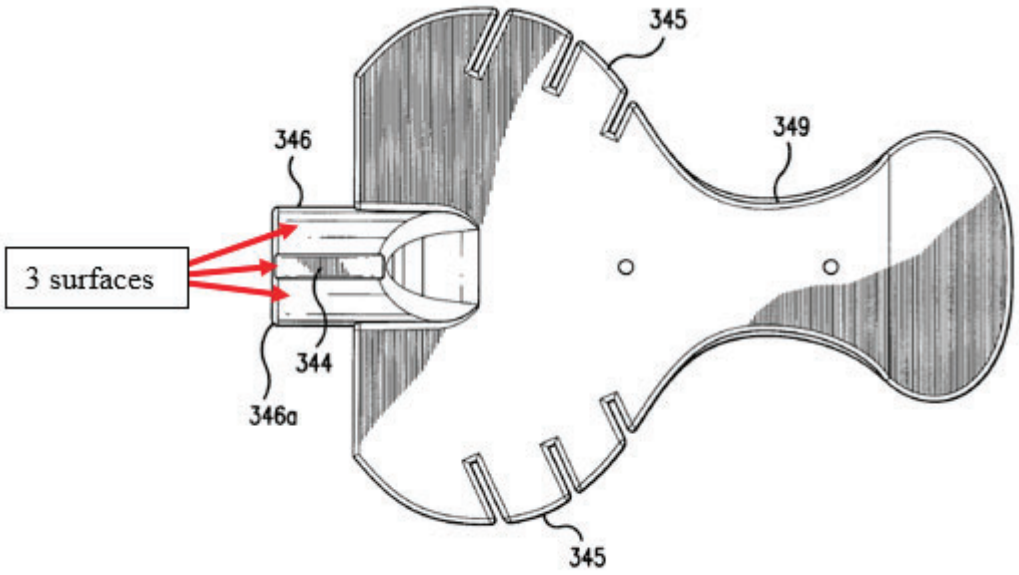

FIG.23B

147. Patent Owner may argue that a projection is the opposite of a "notch". However, these are obvious variations. A notch may project inward, while a projection may project outward. But if the point is to form an interlocking fit, then it matters not which element projects outward and which element projects inward.

Docusign Envelope ID: E9BA7F2F-5499-428A-96B4-B1C9082A1A93

The ’970 Patent formed an inward projecting element on the suction connector and an outward projecting element on the bite block. Black creates an interlocking fit the same way, just vice versa. This is a basic reversal of parts, which I am told is not the basis for patentability.

4. **Claim 7: “7. The mouthpiece of claim 2, wherein the suction connector further comprises an external plug protrusion corresponding to an opening through the bite block portion.”**

148. Black teaches a removable bite block having a groove 311 formed within a wall of the bite member’s conduit 312, and the groove 311 receives a projection 344 formed on the neck of the tongue shield aspirator 340, which is a suction connector. EX1005, 15:36-51. Once motivated to make a bite block removable, a POSA would have been motivated to follow my groove/projection keying method to prevent rotation of the bite block and ensure proper placement. EX1005, 15:46-51.

5. **Claim 8: “8. The mouthpiece of claim 7, wherein the plug protrusion fits into the opening through the bite block portion to provide additional crush-resistance and decreased compressibility during biting by a patient.”**

149. Black teaches a removable bite block having a groove 311 formed within a wall of the bite member’s conduit 312, and the groove 311 receives a projection 344 formed on the neck of the tongue shield aspirator 340, which is a

Docusign Envelope ID: E9BA7F2F-5499-428A-96B4-B1C9082A1A93

suction connector. EX1005, 15:36-51. A POSA would know that anytime an empty gap is filled by a solid object, compressibility would reduce.

6. **Claim 17: "17. The mouthpiece of claim 1, wherein the mouth prop is interchangeable with a second mouth prop that is attachably and detachably associated with the main body portion, the second mouth prop being of a different size."**

150. Black teaches that bite members come in different sizes for different mouth sizes. EX1005, 9:36-38, 9:50-52. Black also teaches that the bite member 310 is detachable. EX1005, 2:1-7, 15:36-51. Thus, Black teaches an interchangeable bite member for different sizes.

D. **Ground 3: Claim 14 is further obvious under 35 U.S.C. 103 by Park in view of Baughan, Johnson, and Hirsch.**

1. **Claim 14: "14. The mouthpiece of claim 1, wherein the second wall further includes a stability bar protruding from an interior surface of the second wall and along a longitudinal axis of the main body portion."**

151. Park incorporates an LED light, which can be projected through a light guide that illuminates the mouthpiece while debris is suctioned through the first and second walls aided by a multiplicity of through holes. EX1006, FIGs. 2-3. Park is not expressly clear whether there also exists a spine extending down the longitudinal axis of the mouth prop 100. My first impression was that the mouth prop 100 includes a spine, but it is equally possible that this line is reflective material to helps with light transmission.

Docusign Envelope ID: E9BA7F2F-5499-428A-96B4-B1C9082A1A93

152. Regardless, spines in dental isolation mouthpieces were entirely conventional. In fact, the first dental isolation mouthpiece I ever saw in 2003 had such a spine. That device corresponded to the device disclosed in Hirsch. Hirsch illustrates a spine 365 running down the longitudinal axis of the mouthpiece.

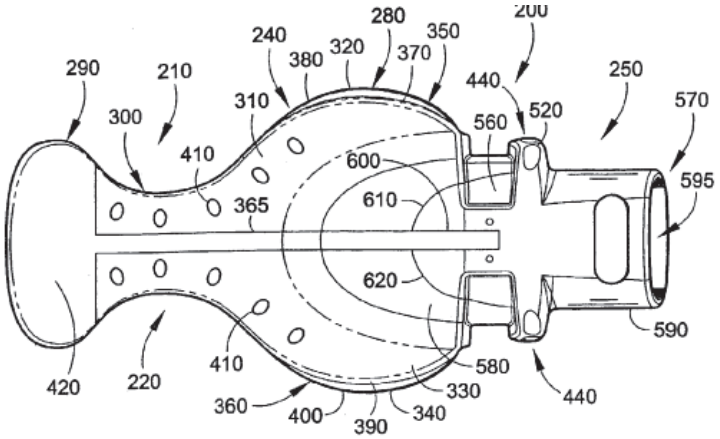

FIG. 19A

153. Hirsch teaches that the spine protrudes from an interior surface of the posterior wall of Hirsch and extends at least partially through the cheek retractor. EX1012, ¶ 78. This spine assists with dispersing light into the intraoral cavity, just like the stated goal of Park. EX1006, Abstract; EX1012, ¶ 78. In addition to light transmission assistance, the spine 365 would increase mouthpiece rigidity, particularly where upper and lower ridges, behind the molars, engage the concave portion 131 of Park.

154. A POSA would have been motivated to include the spine of Hirsch into the mouth prop of Park (if Park doesn't already have a spine) to increase rigidity and help transmit light into the entire oral cavity. EX1006, Abstract;

Docusign Envelope ID: E9BA7F2F-5499-428A-96B4-B1C9082A1A93

EX1012, ¶ 78. Because Hirsch and Park both discuss light transmission, a POSA would have expected success in using a spine to disperse light throughout the oral cavity. *Id.* Moreover, the designs of Park and Hirsch are very similar – Hirsch simply lacks a sidewall that Park discloses. Also, the spine 365 would provide added anti-collapse rigidity throughout the center of the mouth prop. The increased rigidity would also help with retracting cheek tissue as the increase in rigidity due to a spine would provide added memory to push back against cheek tissue. EX1005, 7:21-39. Lastly, no additional modifications are required because Park already teaches a pair of suction ports 112 that are divided where the spine 365 would be formed.

Solmetex Ex. 2040
Ascentcare Dental Products v. Solmetex - IPR2025-01104

Docusign Envelope ID: E9BA7F2F-5499-428A-96B4-B1C9082A1A93

IX. CONCLUSION

155. For these reasons, it is my opinion that claims 1-4 and 7-18 of the ’970 Patent are unpatentable.

* * *

Pursuant to 28 U.S.C. § 1746, I declare under penalty of perjury under the laws of the United States of America that the foregoing is true and correct.

Executed on this 27th day of May, 2025.

Dr. Brian P. Black.