US006086087A

United States Patent [19]

Yang

[11] **Patent Number: 6,086,087**

[45] **Date of Patent: Jul. 11, 2000**

[54] **MULTI-SEAT STROLLER**

[75] Inventor: **Chih-Huang Yang**, Taichung, Taiwan

[73] Assignee: **Ben M. Hsia**, Northbridge, Calif.

[21] Appl. No.: **09/437,285**

[22] Filed: **Nov. 10, 1999**

[51] **Int. Cl.**[7] **B62B 7/08**

[52] **U.S. Cl.** **280/658**; 280/47.41

[58] **Field of Search** 280/644, 648, 280/642, 643, 650, 658, 47.38, 47.39, 47.4, 47.41, 657

[56] **References Cited**

U.S. PATENT DOCUMENTS

4,834,415	5/1989	Yee	280/47.4
4,886,289	12/1989	Yee et al.	280/47.4
5,018,754	5/1991	Cheng	280/47.4
5,167,425	12/1992	Cheng	280/47.4
5,417,449	5/1995	Shamie	280/47.4
5,664,795	9/1997	Haung	280/47.4
5,769,448	6/1998	Wang	280/47.4

Primary Examiner—Richard M. Camby
Attorney, Agent, or Firm—Christensen O'Connor Johnson Kindness PLLC

[57] **ABSTRACT**

A multi-seat stroller includes a stroller frame having a front wheel-carrying portion, a rear wheel-carrying portion spaced apart from the front wheel-carrying portion in a longitudinal direction and mounted with a rear footrest member, and a seat-mounting portion extending in the longitudinal direction between the front and rear wheel-carrying portions. Each of a non-detachable seat member and a detachable seat member has a backrest portion and a horizontal seat portion provided with a retaining unit for mounting pivotally the backrest portion on the seat portion such that the backrest portion can be selectively disposed in one of a folded state, where the backrest portion overlies the seat portion, and an extended state, where the backrest portion extends vertically from the seat portion. The seat portion of the non-detachable seat member is mounted fixedly on the seat-mounting portion of the stroller frame, whereas the seat portion of the detachable seat member is movably disposed on the seat-mounting portion so as to be spaced apart from the non-detachable seat member in the longitudinal direction. A seat-locking unit is provided on the seat-mounting portion of the stroller frame for retaining removably the seat portion of the detachable seat member on the seat-mounting portion.

15 Claims, 17 Drawing Sheets

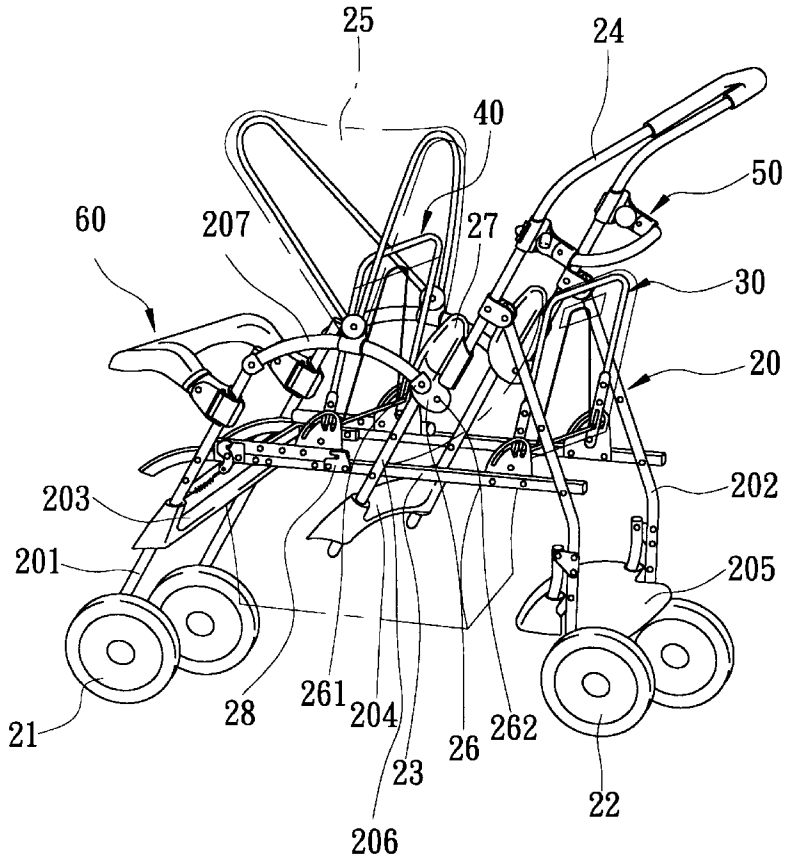

UPPABABY ET AL. EX. 1037

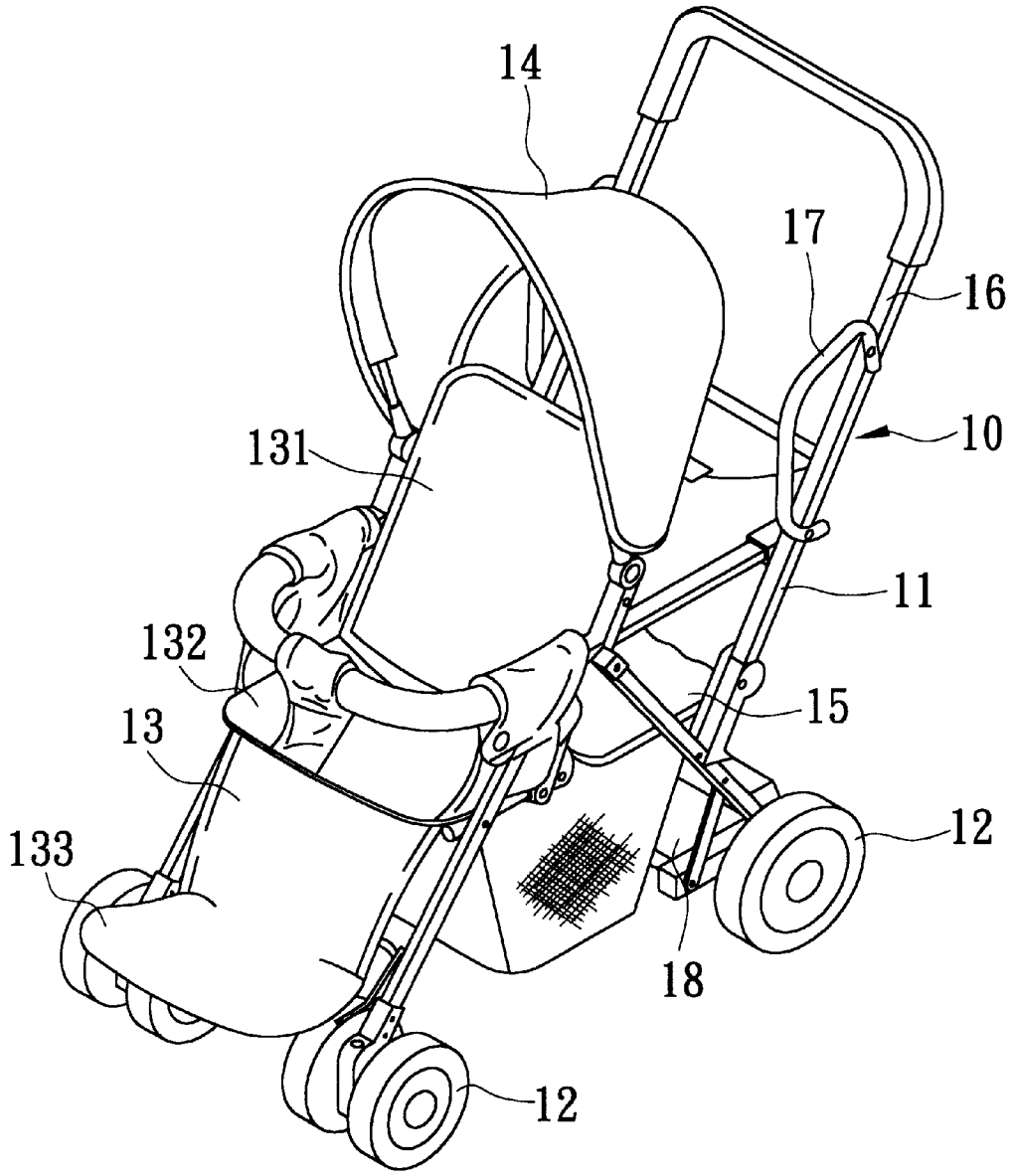

FIG. 1
PRIOR ART

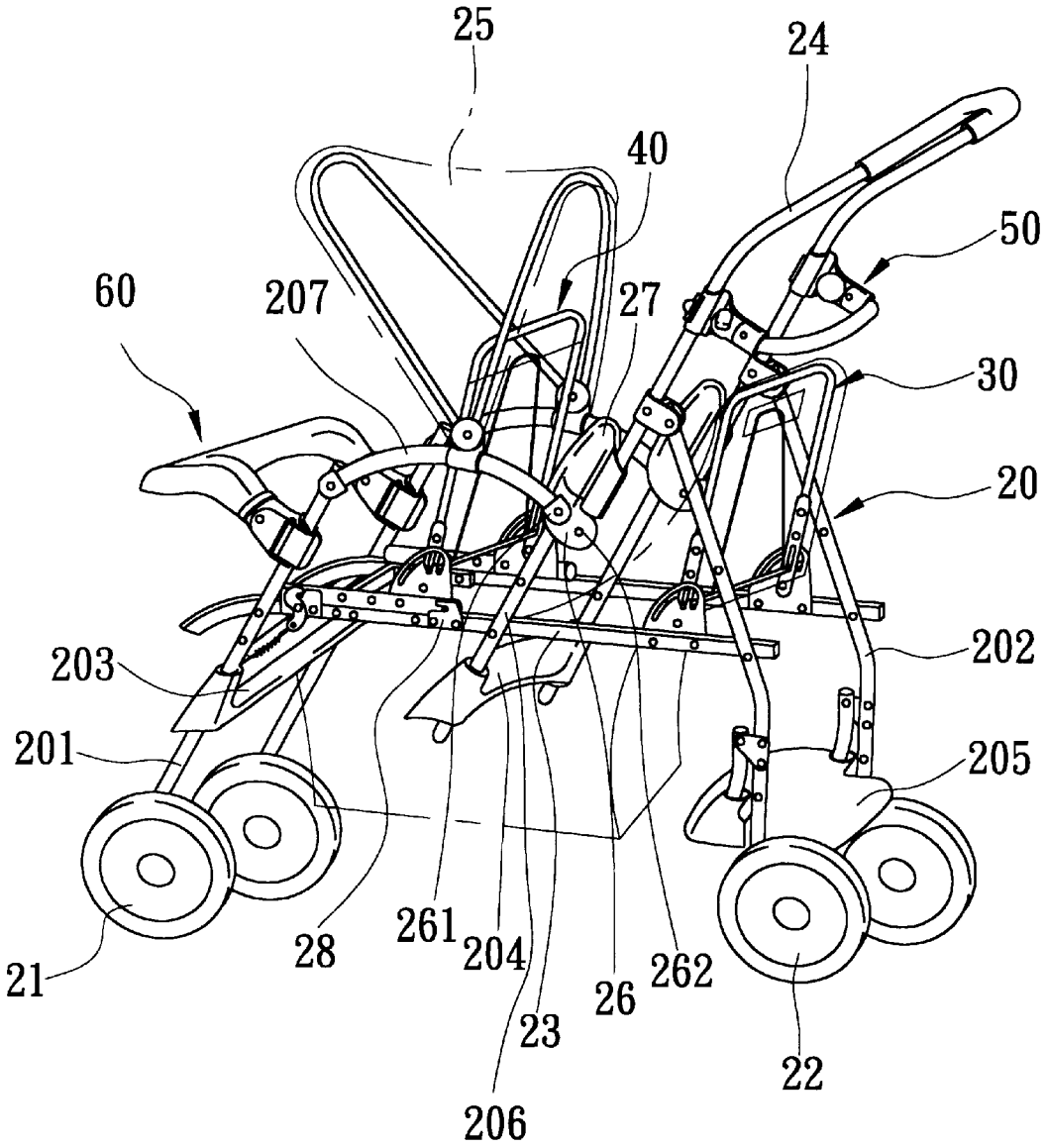
25
24
40
50
60
207
27
30
20
203
202
201
205
21
28
261
204
26
262
23
22
206

FIG. 2

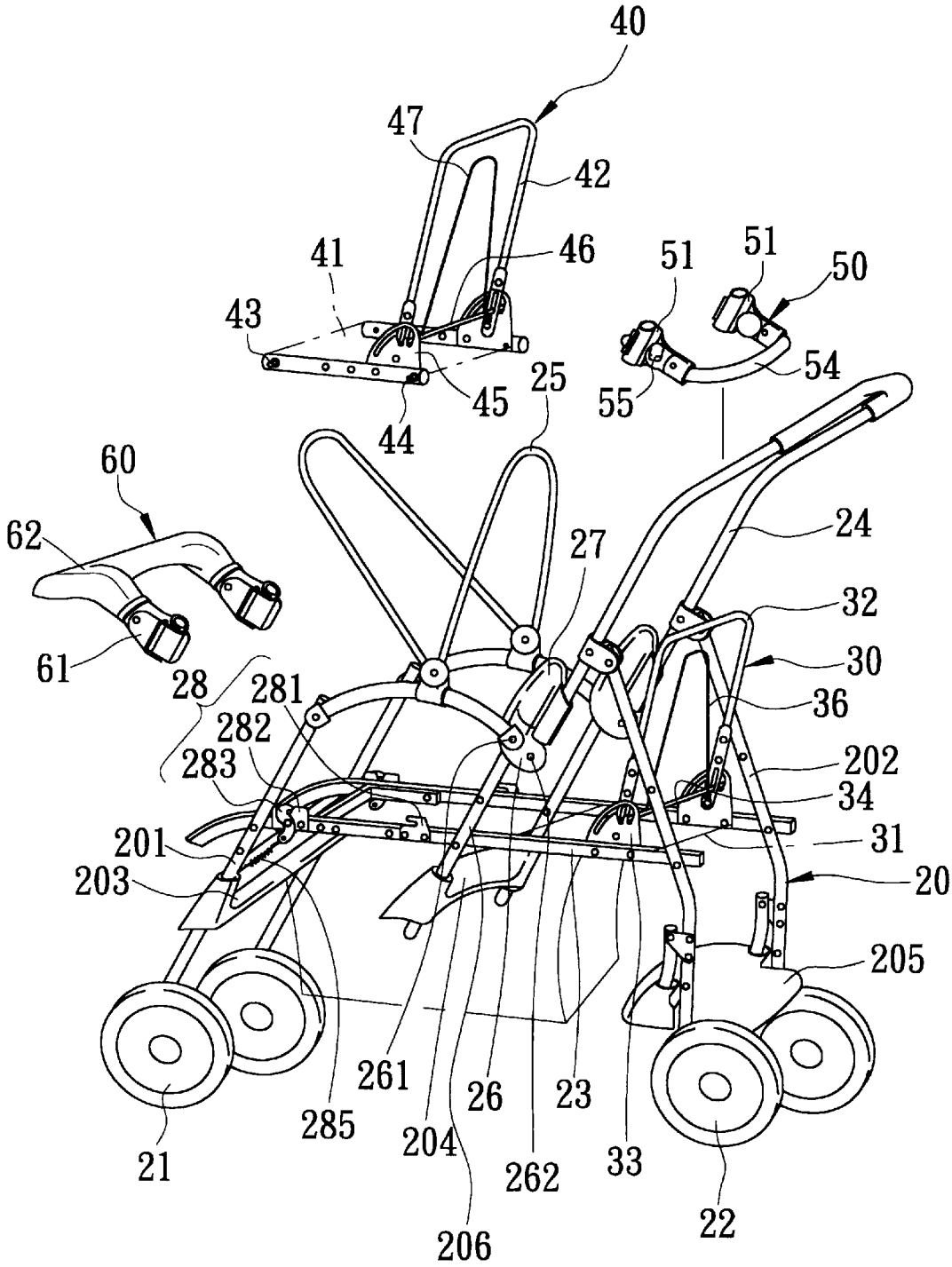
40
47
42
41
46
51
51
50
43
54
25
45
55
44
60
24
62
27
32
61
30
28
281
36
282
202
283
34
201
31
203
20
205
261
26
23
285
204
262
33
21
22
206

FIG. 3

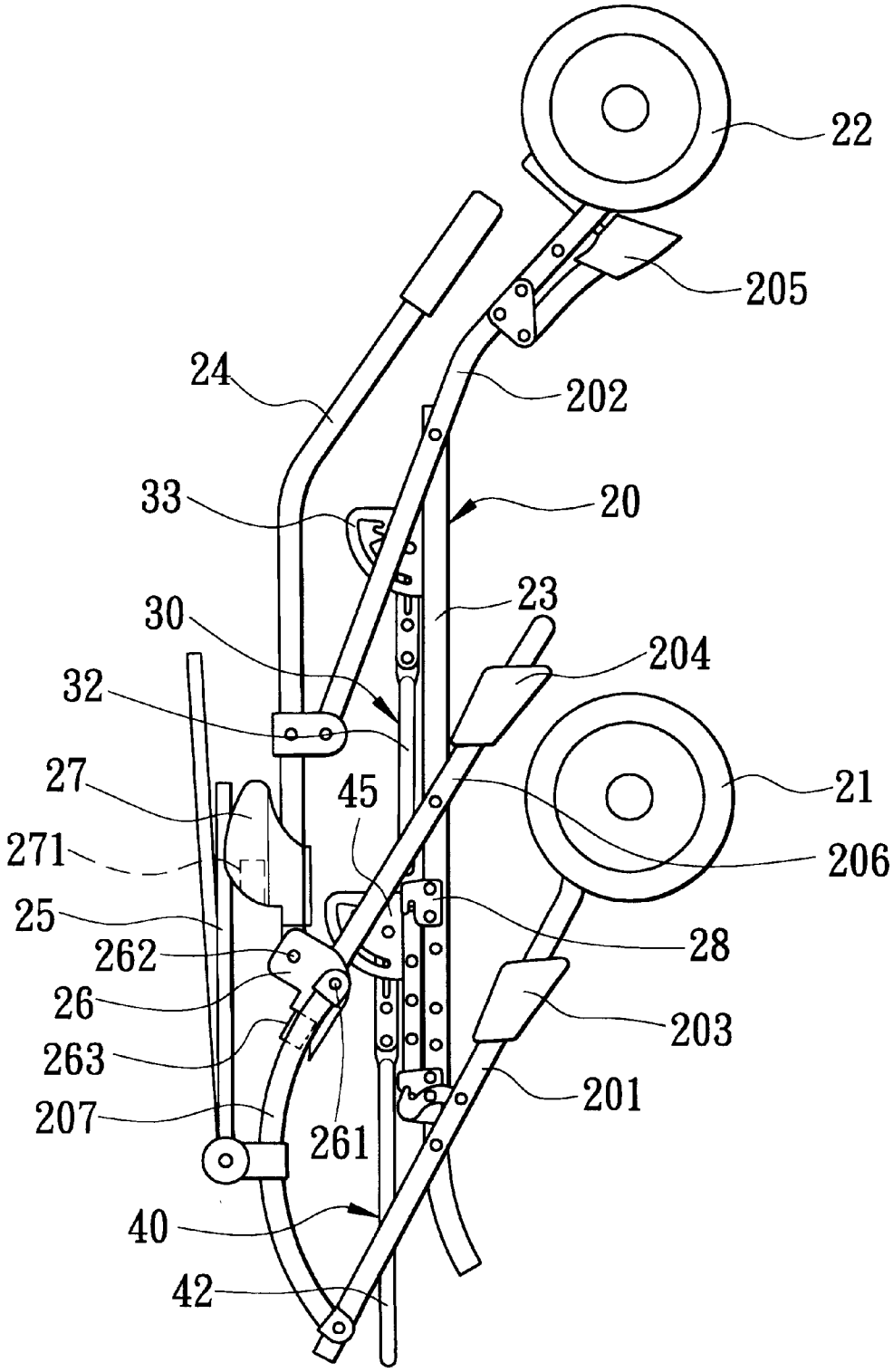
22
205
24
202
33
20
23
30
204
32
21
27
45
206
271
25
28
262
26
203
263
201
207
261
40
42

FIG. 4

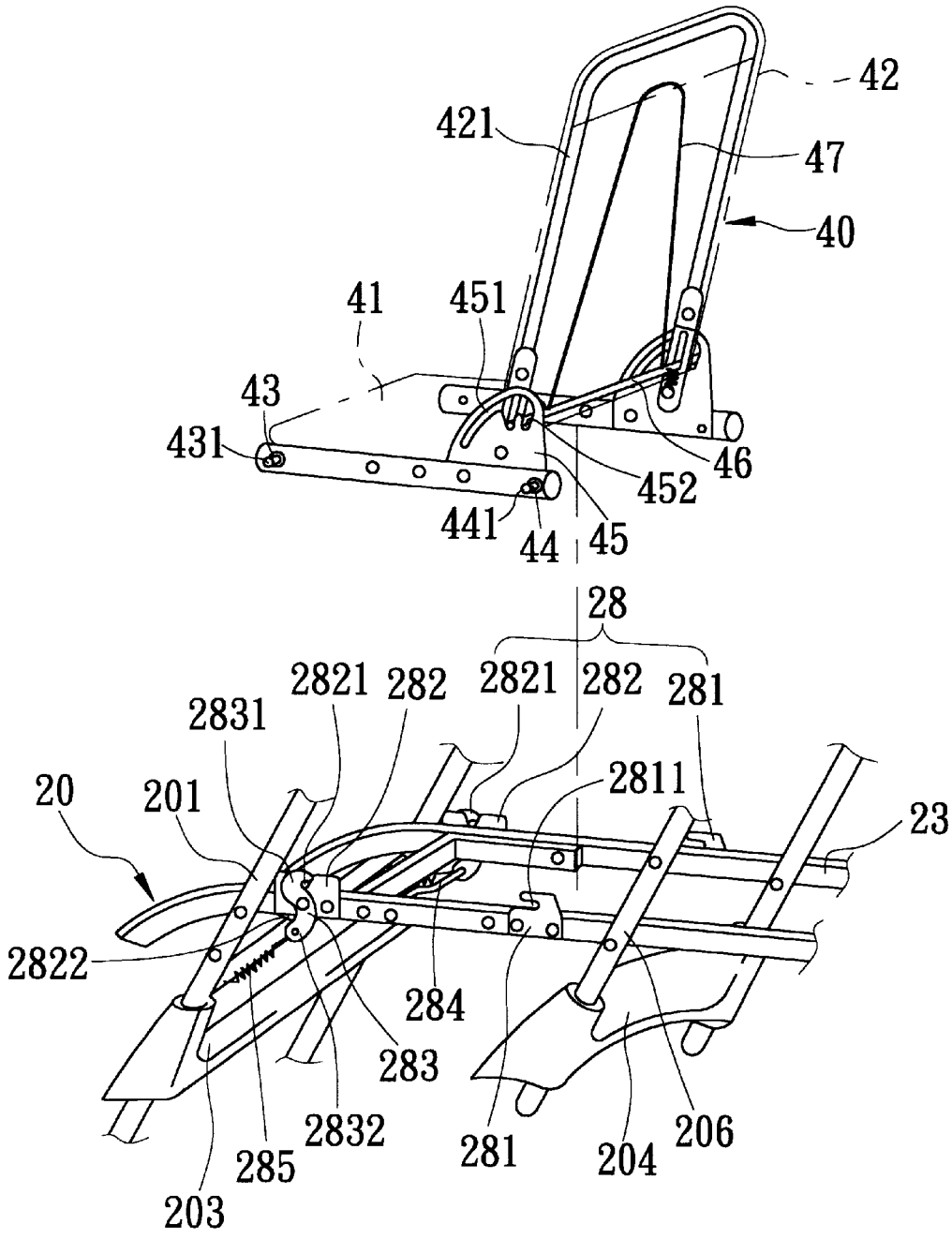
42
421
47
40
41
451
43
431
46
452
441
44
45
28
2821
282
2821
282
281
2831
2811
20
201
23
2822
284
283
2832
281
204
206
285
203

FIG. 5

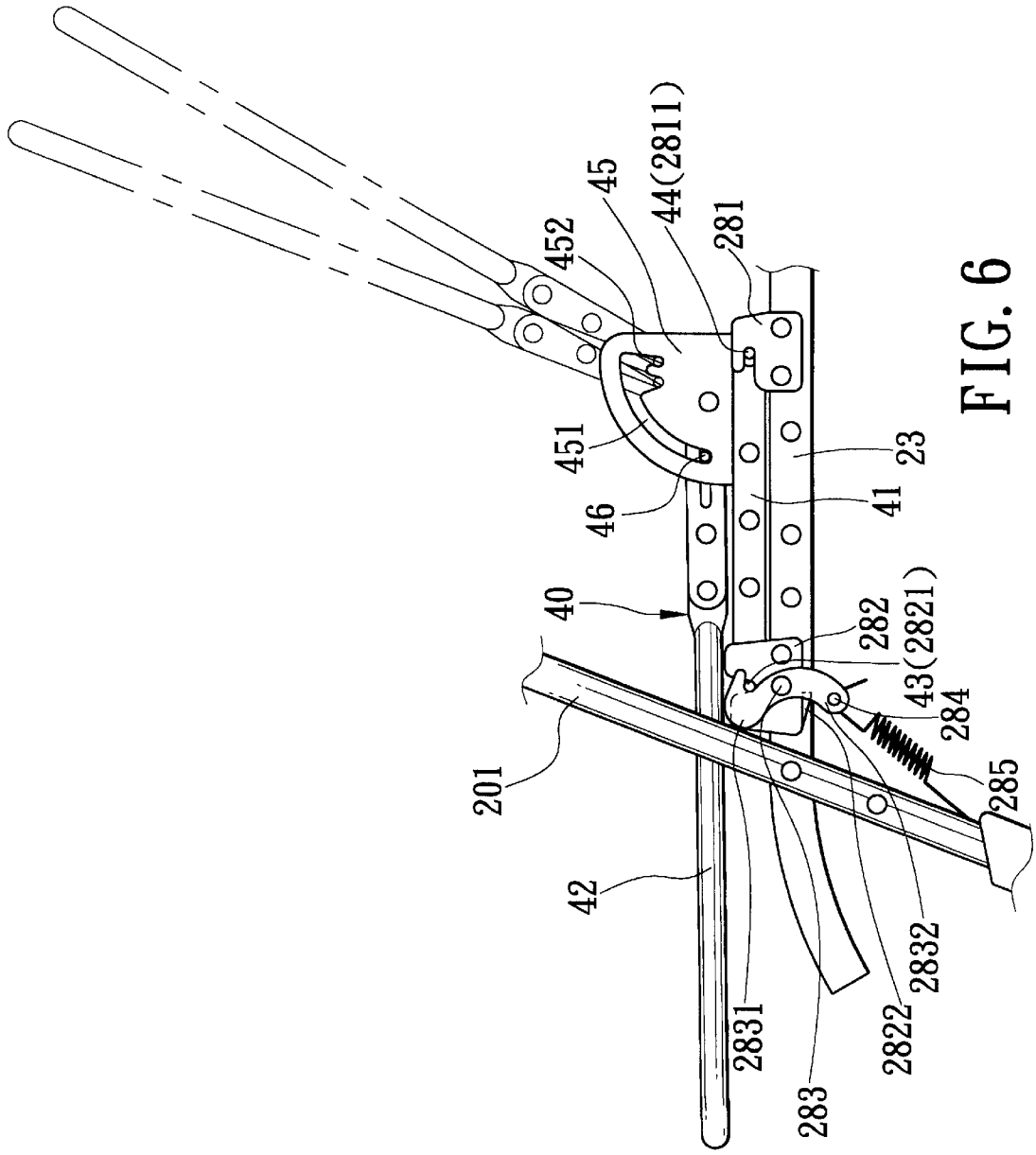
452
45
44(2811)
281
451
46
23
41
40
282
43(2821)
284
285
201
42
2831
283
2822
2832

FIG. 6

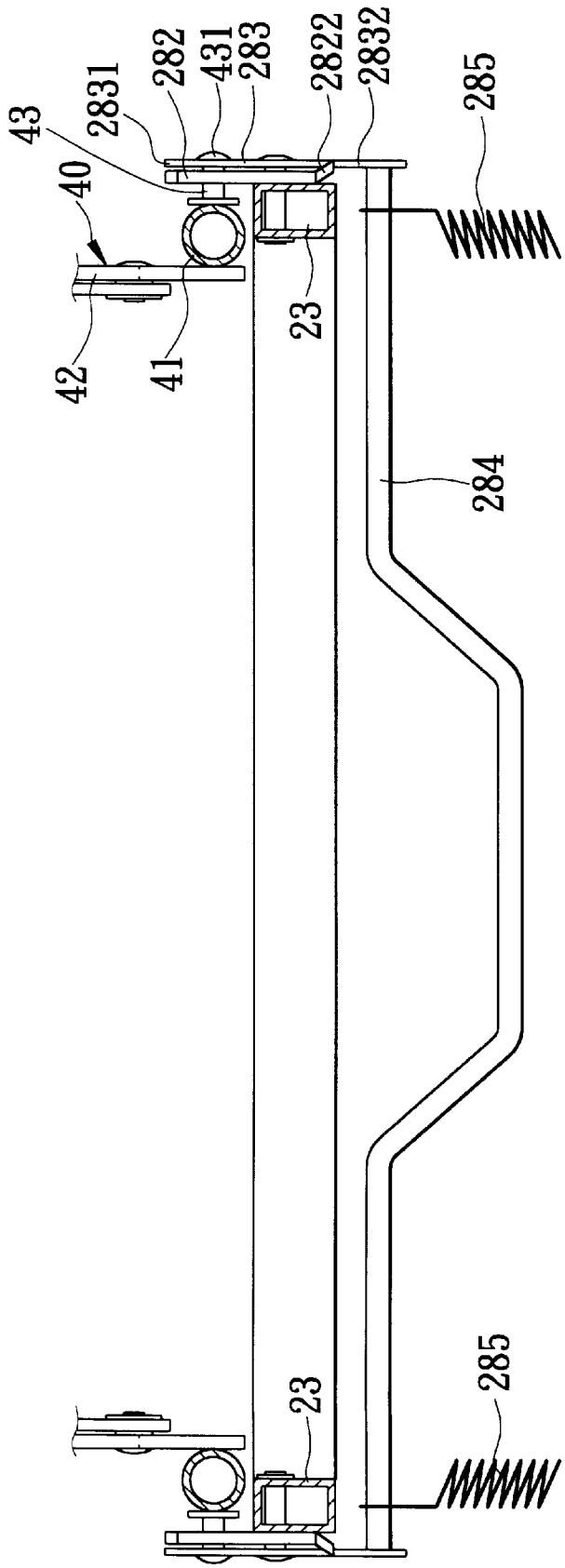

FIG. 7

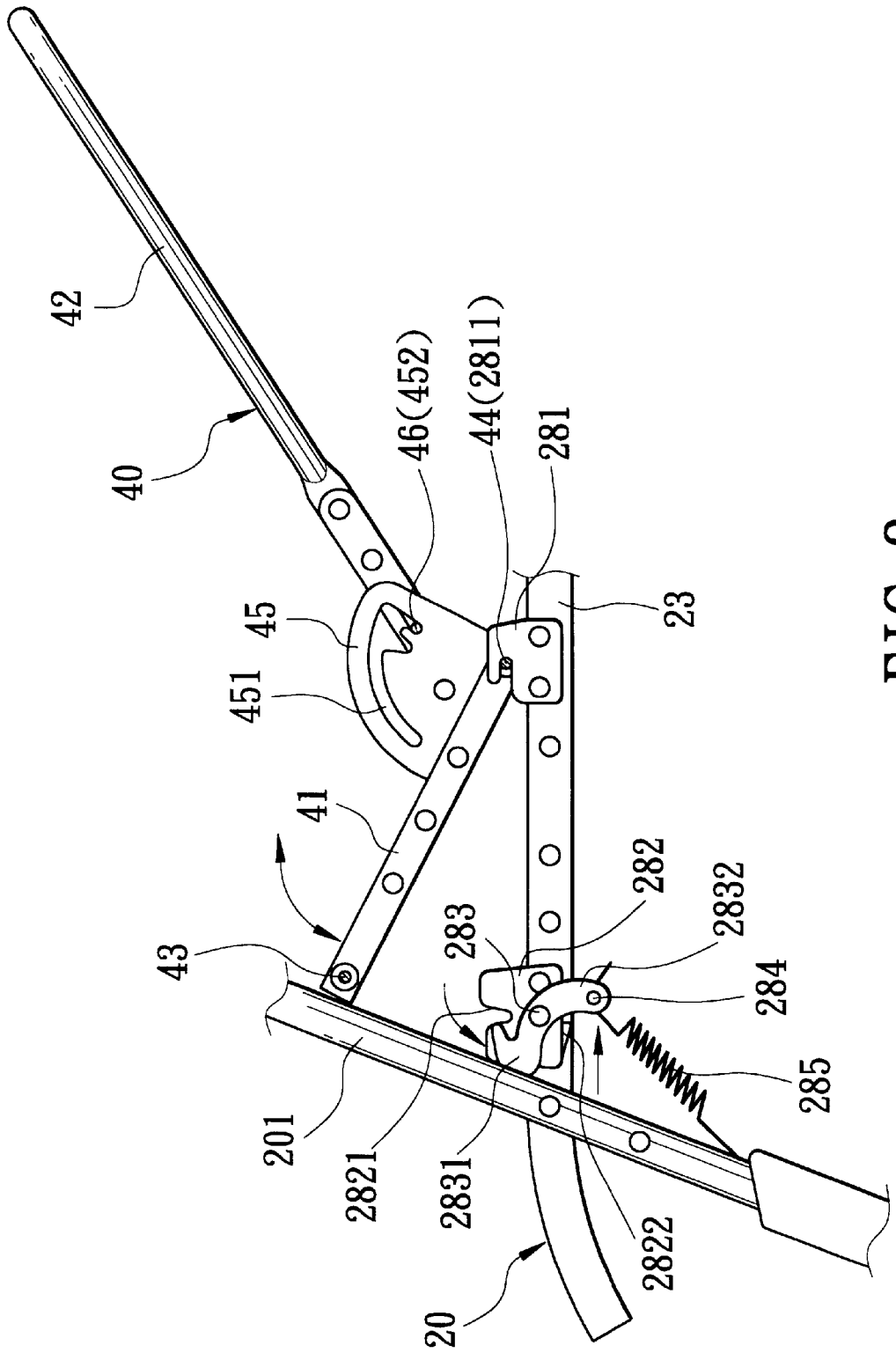
42
40
46(452)
44(2811)
281
45
451
23
41
43
282
2832
283
284
285
201
2821
2831
2822
20

FIG. 8

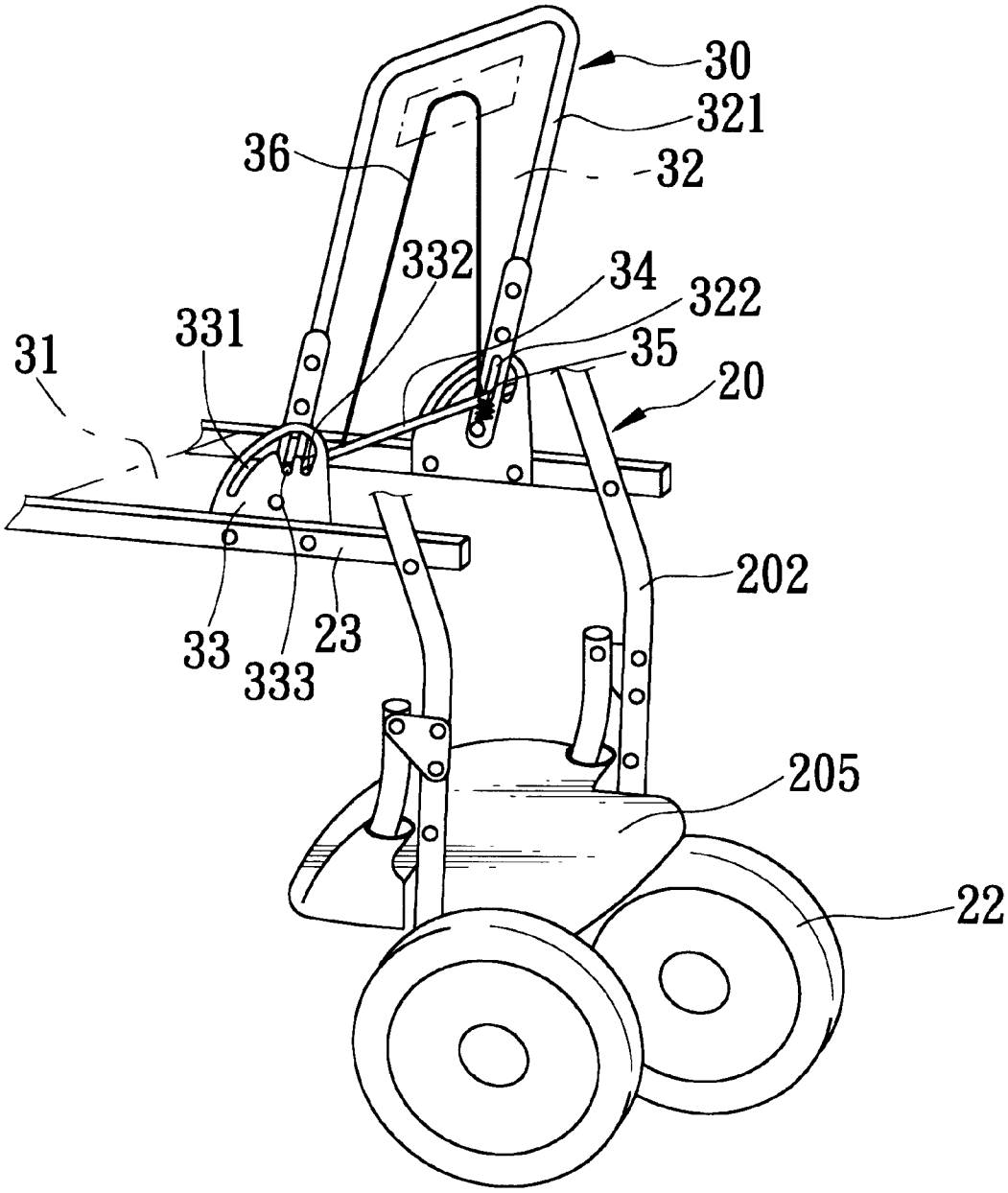

FIG. 9

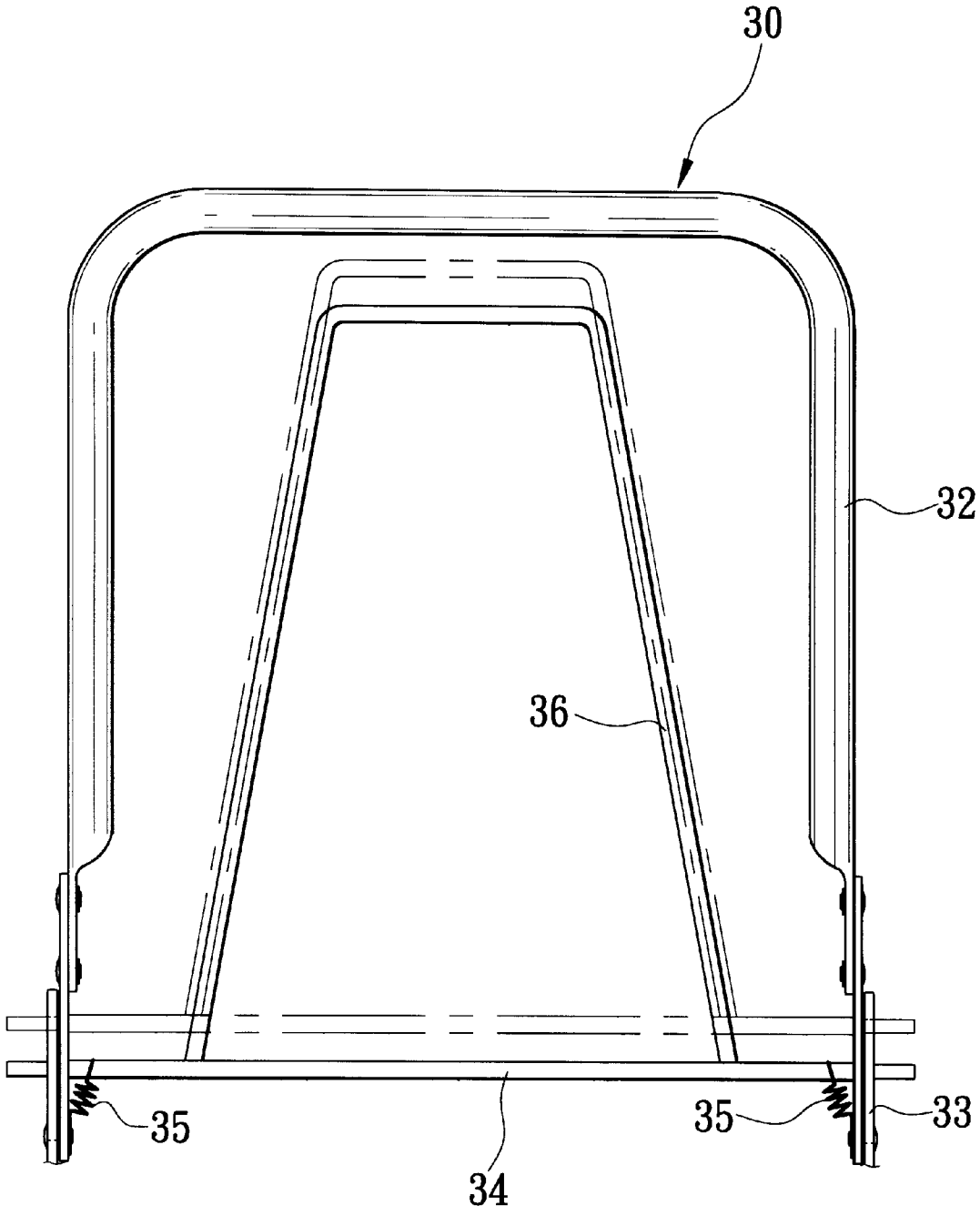

FIG. 10

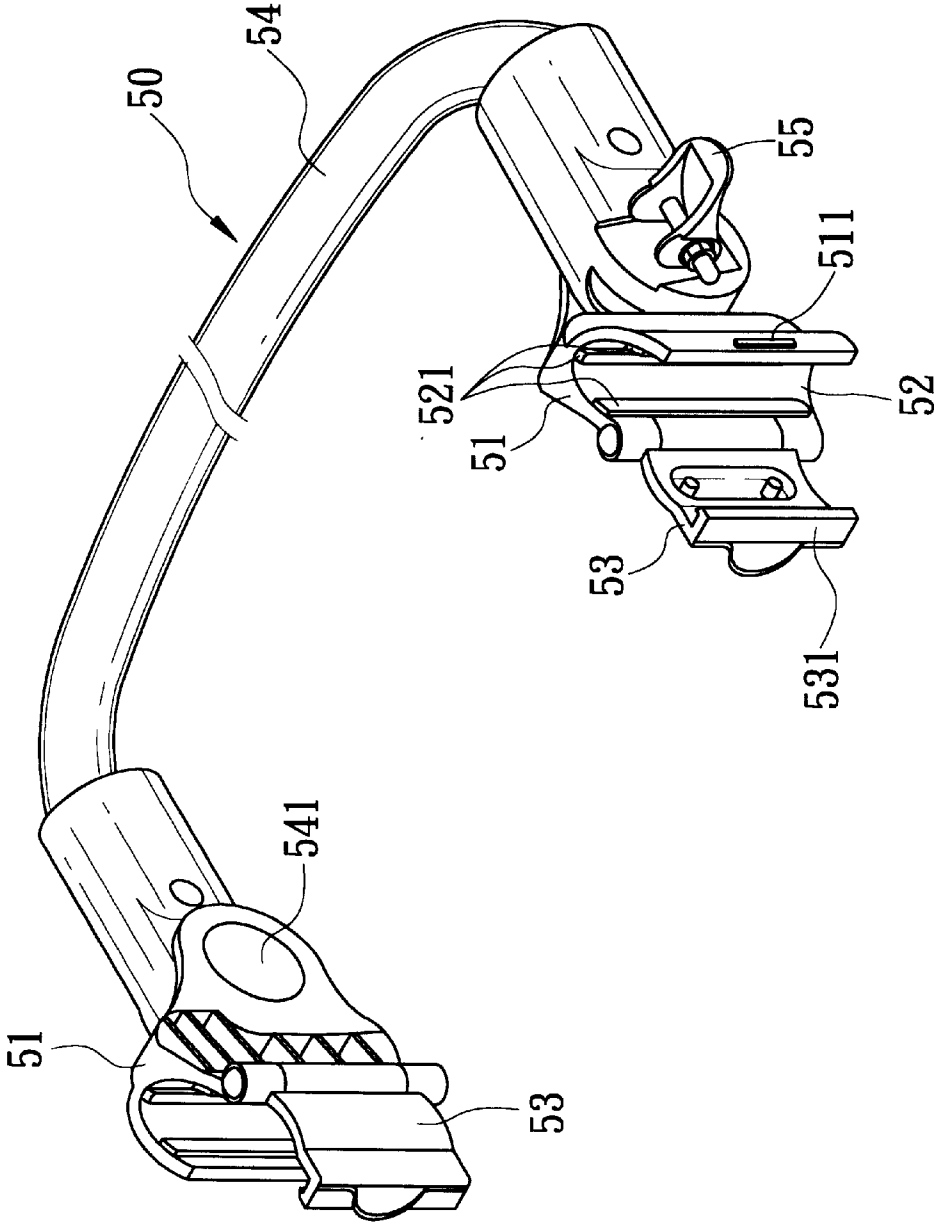

FIG. 11

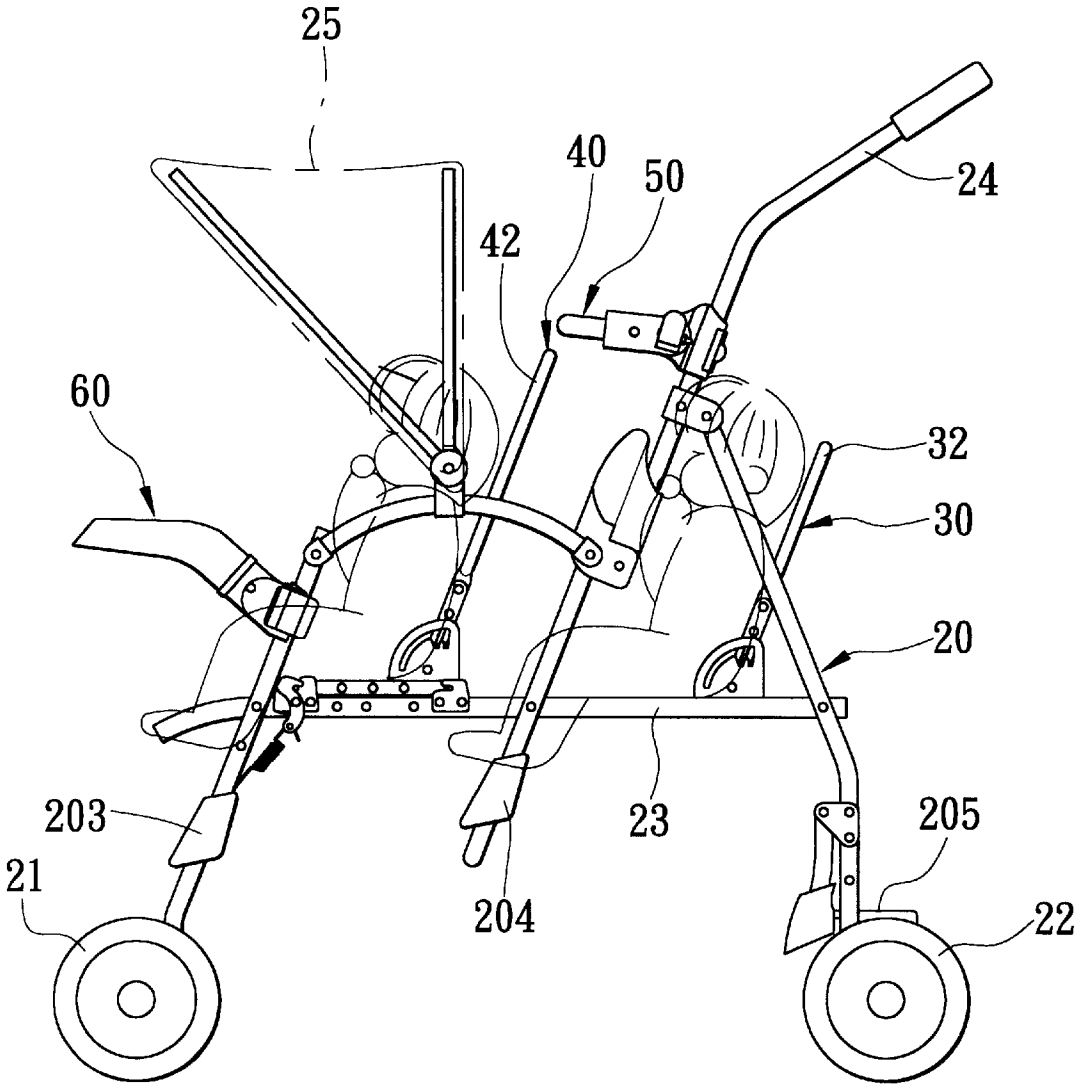

FIG. 12

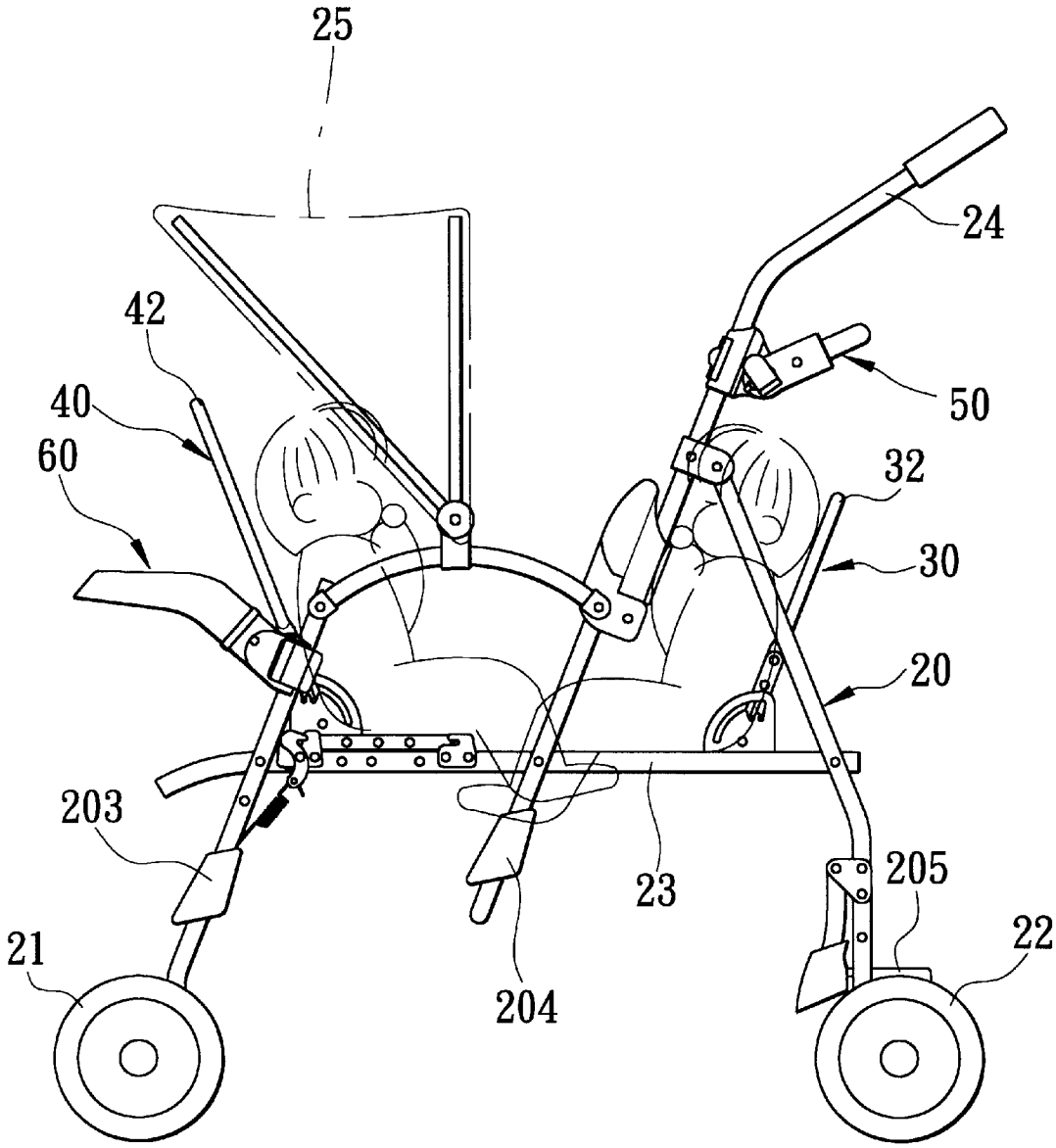

FIG. 13

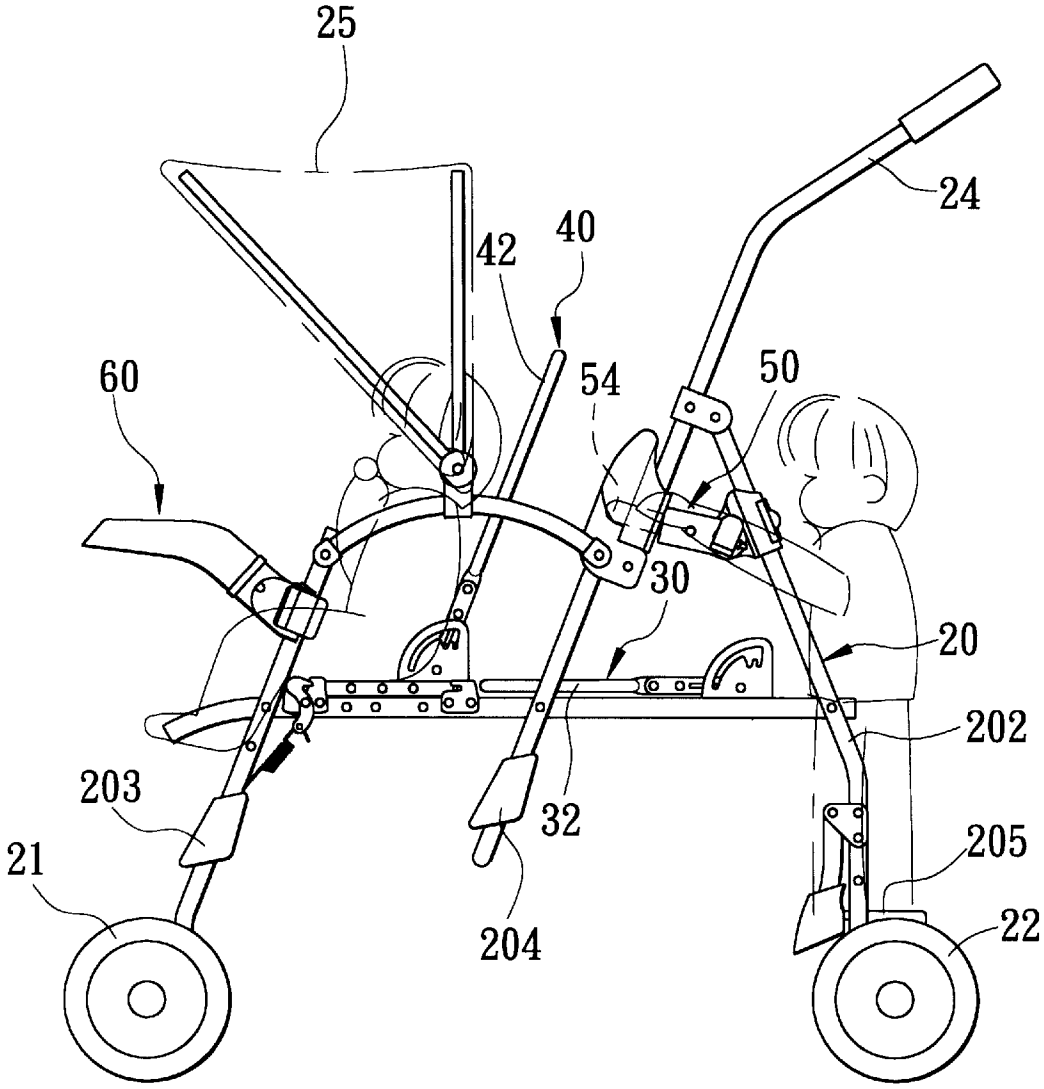

FIG. 14

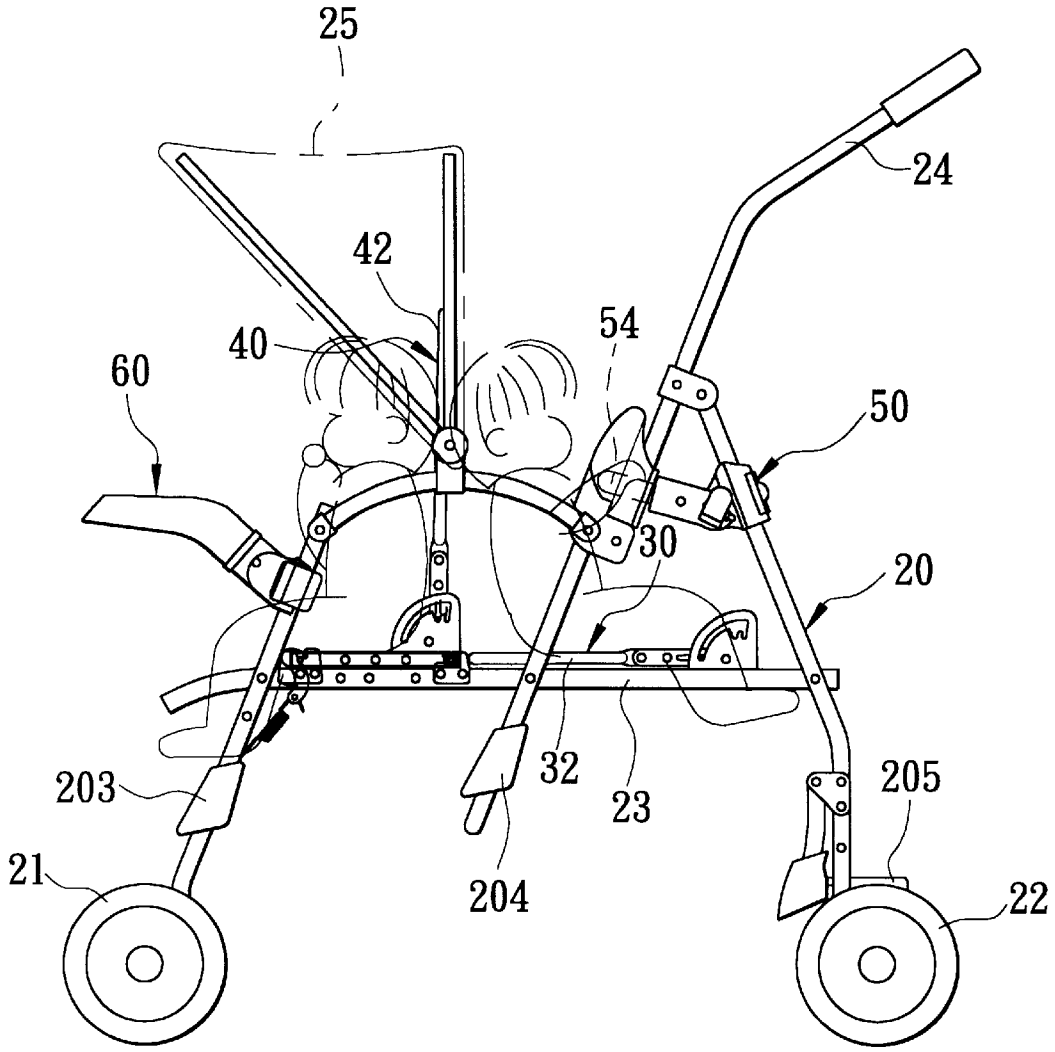

FIG. 15

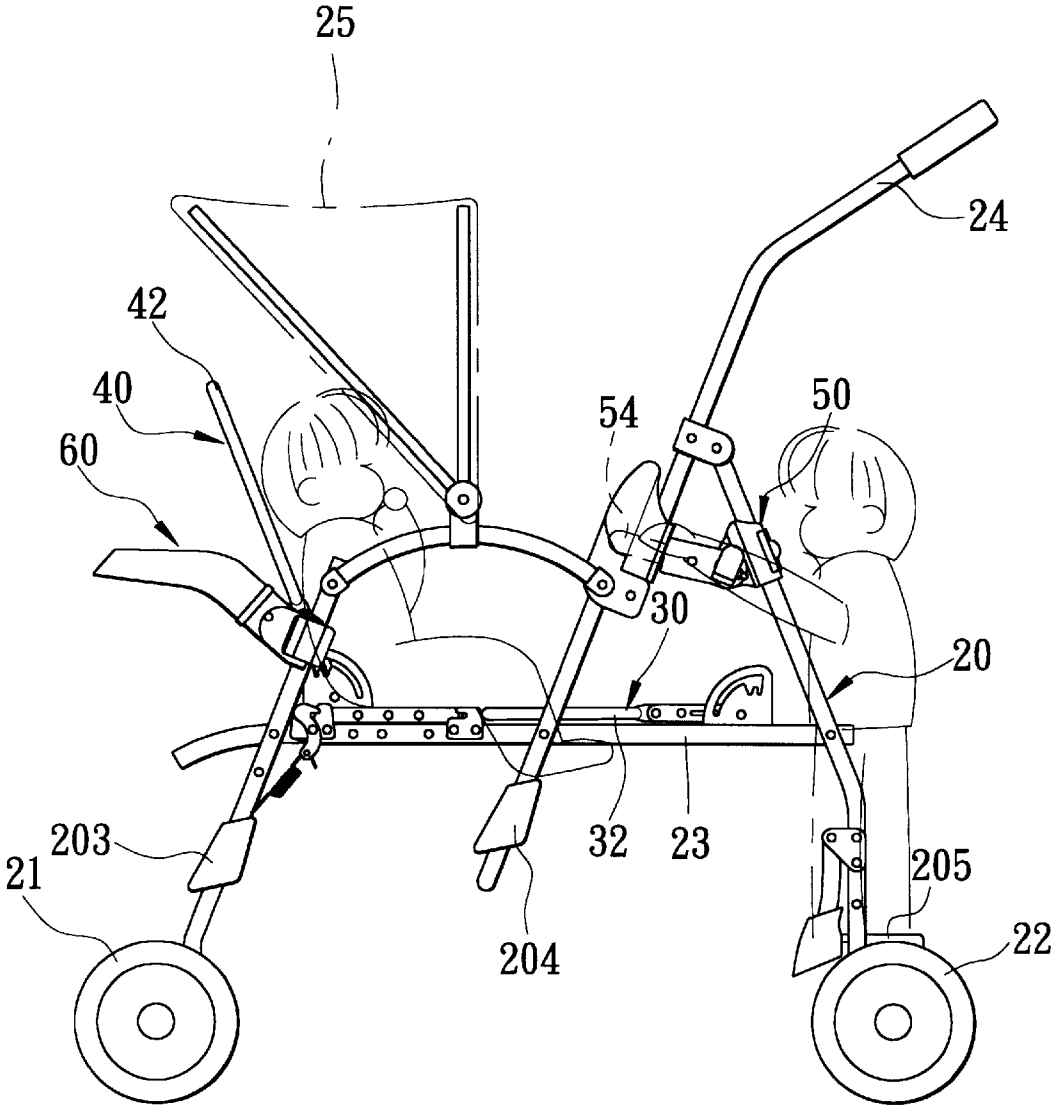

FIG. 16

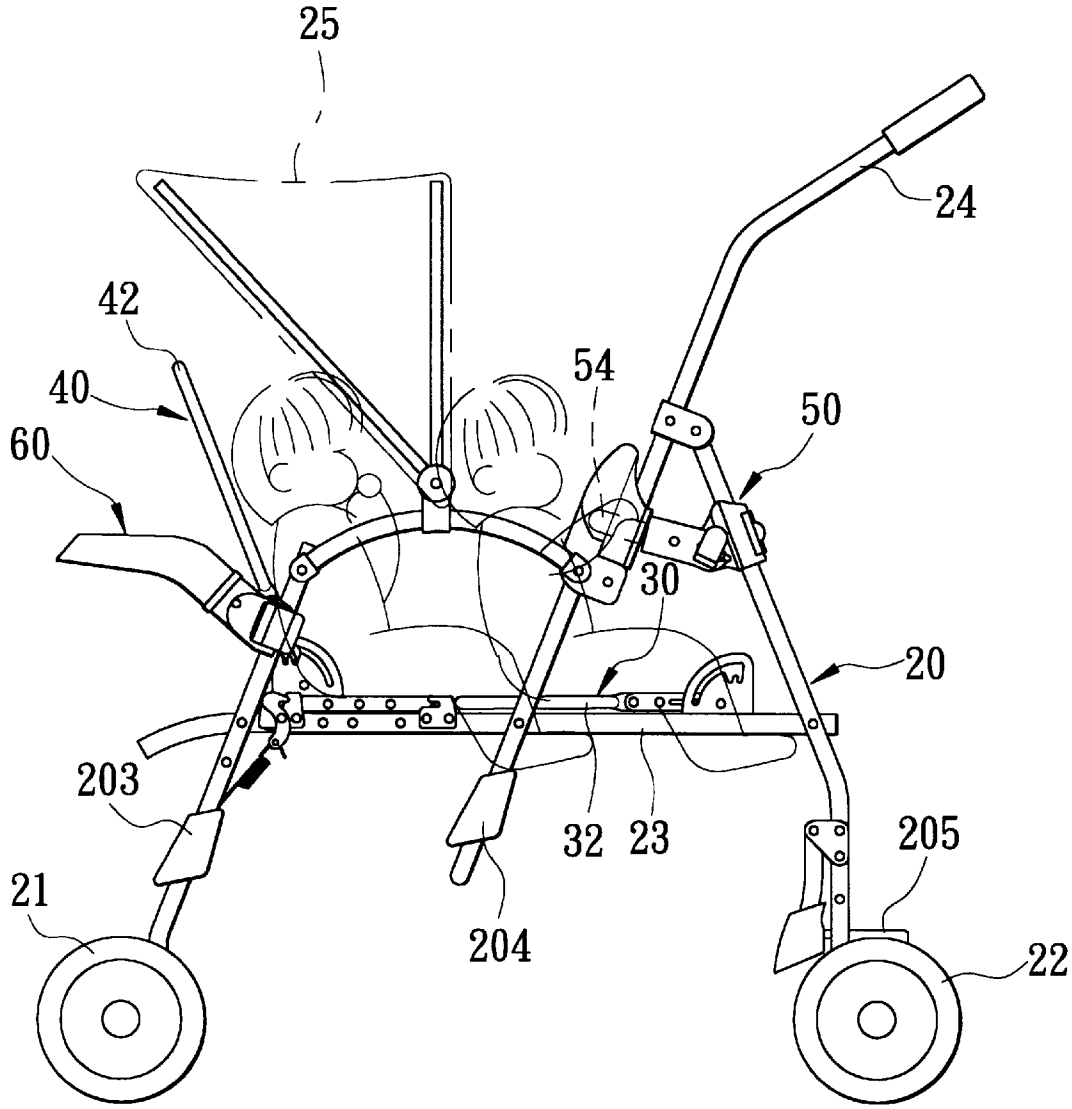

FIG. 17

MULTI-SEAT STROLLER

BACKGROUND OF THE INVENTION

1. Field of the Invention

The invention relates to a multi-seat stroller, more particularly to one that can accommodate two children in many different ways.

2. Description of the Related Art

Referring to FIG. **1**, a conventional twin-seat stroller **10** is shown to comprise a stroller frame **11** having a lower portion provided with four wheels **12**. A front seat member **13** is mounted fixedly on a front part of the stroller frame **11**, and has a backrest portion **131**, a seat portion **132** and a footrest portion **133** that are connected integrally. A canopy **14** is mounted pivotally on an intermediate part of the stroller frame **11** to shield an upper side of the front seat member **13**. A rear seat **15** is mounted on the stroller frame **11** behind the front seat member **13**. A push handle **16** extends rearwardly and upwardly from the stroller frame **11**. Two grip members **17** are mounted respectively on a pair of upright handle portions of the push handle **16**. A footrest member **18** is mounted on the lower rear part of the stroller frame **11**.

In use, a first child can be seated on the front seat member **13**. A second child can be seated on the rear seat **15** with the hands of the second child gripping the grip members **17**. Alternatively, the second child can stand on the footrest member **18**. Thus, the stroller **10** can accommodate two children in two different ways.

Because the front seat member **13** is fixed to the stroller frame **11**, the child seated thereon will always face forwardly and will be unable to see the guardian pushing the stroller **10**. As such, it is difficult for the guardian to monitor and comfort the child on the front seat member **13** while pushing the stroller **10** at the same time. Moreover, although the stroller **10** can accommodate two children in two different ways, it does not allow for the children to be seated on the stroller **10** in a face-to-face relationship that would enable them to play with one another. Thus, there is a need to develop a stroller that can enhance interaction between the children and the guardian while the stroller is in use.

SUMMARY OF THE INVENTION

Therefore, the object of the present invention is to provide a multi-seat stroller that can accommodate two children in more than two different ways so as to overcome the aforesaid drawbacks associated with the conventional twin-seat stroller.

According to the present invention, a multi-seat stroller comprises:

a stroller frame having a front wheel-carrying portion, a rear wheel-carrying portion spaced apart from the front wheel-carrying portion in a longitudinal direction and mounted with a rear footrest member, and a seat-mounting portion extending in the longitudinal direction between the front and rear wheel-carrying portions;

a non-detachable seat member and a detachable seat member, each having a backrest portion and a horizontal seat portion provided with a retaining unit for mounting pivotally the backrest portion on the seat portion such that the backrest portion can be selectively disposed in one of a folded state, where the backrest portion overlies the seat portion, and an extended state, where the backrest portion extends vertically from the seat portion,

the seat portion of the non-detachable seat member being mounted fixedly on the seat-mounting portion of the stroller frame, the seat portion of the detachable seat member being movably disposed on the seat-mounting portion so as to be spaced apart from the non-detachable seat member in the longitudinal direction; and

a seat-locking unit provided on the seat-mounting portion of the stroller frame for retaining removably the seat portion of the detachable seat member on the seat-mounting portion.

BRIEF DESCRIPTION OF THE DRAWINGS

Other features and advantages of the present invention will become apparent in the following detailed description of the preferred embodiment with reference to the accompanying drawings, of which:

FIG. **1** is a perspective view illustrating a conventional twin-seat stroller;

FIG. **2** is an assembled perspective view illustrating the preferred embodiment of a multi-seat stroller according to the present invention;

FIG. **3** is an exploded perspective view of the preferred embodiment;

FIG. **4** is a schematic view of the preferred embodiment in a folded state;

FIG. **5** is a fragmentary exploded perspective view illustrating a stroller frame and a detachable seat member of the preferred embodiment;

FIG. **6** is a schematic view illustrating the stroller frame and the detachable seat member of the preferred embodiment in an assembled state;

FIG. **7** is a schematic partly sectional view illustrating how a seat-locking unit retains the detachable seat member on the stroller frame;

FIG. **8** is a schematic view illustrating how the detachable seat member is removed from the stroller frame;

FIG. **9** is a fragmentary perspective view illustrating the stroller frame and a non-detachable seat member of the preferred embodiment;

FIG. **10** is a schematic view illustrating a backrest portion of the non-detachable seat member, and a retaining unit for retaining the backrest portion at a desired inclination;

FIG. **11** is a perspective view illustrating a hand grip member of the preferred embodiment;

FIG. **12** is a schematic view illustrating the preferred embodiment in a first state of use;

FIG. **13** is a schematic view illustrating the preferred embodiment in a second state of use;

FIG. **14** is a schematic view illustrating the preferred embodiment in a third state of use;

FIG. **15** is a schematic view illustrating the preferred embodiment in a fourth state of use;

FIG. **16** is a schematic view illustrating the preferred embodiment in a fifth state of use; and

FIG. **17** is a schematic view illustrating the preferred embodiment in a sixth state of use.

DETAILED DESCRIPTION OF THE PREFERRED EMBODIMENT

Referring to FIGS. **2** and **3**, the preferred embodiment of a multi-seat stroller according to the present invention is shown to comprise a stroller frame **20**, a non-detachable seat

member **30**, a detachable seat member **40**, a hand grip member **50**, and a tray frame member **60**. Each of the non-detachable seat member **30** and the detachable seat member **40** is constructed using known rod-like frame members that are provided with a cloth covering. For the sake of simplicity, the cloth coverings are either omitted from or illustrated using phantom lines in the drawings.

The stroller frame **20** has a front wheel-carrying portion that includes a pair of front wheel-carrying rods **201**, a rear wheel-carrying portion that includes a pair of rear wheel-carrying rods **202** and a push handle **24**, and a seat-mounting portion that includes a parallel pair of seat-mounting bars **23** extending in a longitudinal direction. The front and rear wheel-carrying rods **201**, **202** have lower portions provided with front and rear wheels **21**, **22** respectively for movement of the stroller frame **20**. Each of the seat-mounting bars **23** has a front end connected pivotally to an intermediate portion of a corresponding one of the front wheel-carrying rods **201**, and a rear end connected pivotally to an intermediate portion of a corresponding one of the rear wheel-carrying rods **202**. Each of a pair of linking bars **206** has an intermediate portion connected pivotally to a corresponding one of the seat-mounting bars **23** between the front and rear ends of the latter. Each of the linking bars **206** further has an upper portion provided with a connecting seat **26**. Each of a pair of bridging bars **207** has a front end connected pivotally to an upper portion of a corresponding one of the front wheel-carrying rods **201**, and a rear end connected pivotally to the connecting seat **26** on a respective one of the linking bars **206** at a pivot point **261**. A collapsible canopy **25** is mounted pivotally on the bridging bars **207**. The push handle **24** has a pair of upright handle portions. The intermediate section of each of the upright handle portions of the push handle **24** is connected pivotally to an upper portion of a corresponding one of the rear wheel-carrying rods **201**. The lower section of each of the upright handle portions of the push handle **24** is connected pivotally to the connecting seat **26** on a respective one of the linking bars **206** at a pivot point **262**. A known spring-loaded locking member **27** is provided slidably on each of the upright handle portions of the push handle **24**, and is formed with a socket **271** for engaging removably a stub projection **263** on the connecting seat **26** of the respective one of the linking bars **206** in order to permit retention of the stroller frame **20** in an unfolded state, as shown in FIG. **2**.

A front footrest member **203** is mounted on and extends across the front wheel-carrying rods **201** above the front wheels **21**. An intermediate footrest member **204** is mounted on and extends across lower portions of the linking bars **206**. A rear footrest member **205** is mounted on and extends across the rear wheel-carrying rods **202** above the rear wheels **22**.

The linking bars **206** divide the seat-mounting bars **23** of the stroller frame **20** into a front portion and a rear portion. In the preferred embodiment, a seat-locking unit **28** is provided on the front portion of the seat-mounting bars **23**. With further reference to FIGS. **5**, **6** and **7**, the seat-locking unit **28** is disposed on opposite lateral sides of the stroller frame **20**, and includes a pair of pivotal retention seats **281**, a pair of latch retention seats **282**, a pair of generally S-shaped hooking members **283**, a release rod **284**, and a pair of biasing springs **285**. The seat-locking unit **28** is used to retain removably the detachable seat member **40** on the stroller frame **20**.

Each of the pivotal retention seats **281** has a lower portion secured on a respective one of the seat-mounting bars **23** adjacent to one of the linking bars **206**, and an upper portion formed with a horizontally extending groove **2811** that opens forwardly. Each of the latch retention seats **282** has a lower portion secured on a respective one of the seat-mounting bars **23** adjacent to one of the front wheel-carrying rods **201**, and an upper portion formed with a downwardly extending groove **2821**. Each of the hooking members **283** has an intermediate portion mounted pivotally on a respective one of the latch retention seats **282**, an upper hooking end **2831** disposed adjacent to the downwardly extending groove **2821**, and a lower hooking end **2832**. The release rod **284** has opposite ends connected to the lower hooking ends **2832** of the hooking members **283**. Thus, operation of the release rod **284** will result in simultaneous movement of the hooking members **283**. Each of the biasing springs **285** has an upper end connected to the release rod **284**, and a lower end connected to a respective one of the front wheel-carrying rods **201**. The biasing springs **285** pull the release rod **284** forwardly, thereby causing the upper hooking ends **2831** of the hooking members **283** to pivot rearwardly. The lower portion of each of the latch retention seats **282** is further formed with a lateral stop flange **2822** that normally engages the lower hooking end **2832** of the respective one of the hooking members **283** to limit the rearward pivoting movement of the upper hooking end **2831**, thereby disposing the hooking members **283** in a normally closed state, where the upper hooking end **2831** of each of the hooking members **283** extends across the open top side of the respective downwardly extending groove **2821** and cooperates with the same to form a closed latch engaging space.

Referring to FIG. **8**, when the release rod **284** is pushed rearwardly against the action of the biasing springs **285**, the lower hooking ends **2832** of the hooking members **283** pivot rearwardly, thereby causing the upper hooking ends **2831** to pivot forwardly so as to dispose the hooking members **283** in an opened state, where the upper hooking ends **2831** of the hooking members **283** cease to extend across the open top sides of the downwardly extending grooves **2821**.

Referring to FIG. **9**, in the preferred embodiment, the non-detachable seat member **30** is disposed on the rear portion of the seat-mounting bars **23** of the stroller frame **20**, and includes a horizontal seat portion **31** and a backrest portion **32**.

The seat portion **31** is mounted fixedly on the seat-mounting bars **23**. The seat portion **31** has a rear end provided with a pair of upright retaining plates **33** at opposite lateral sides, respectively. Each of the retaining plates **33** is formed with a curved slot **331** that curves upwardly and rearwardly. The curved slot **331** has a lower slot-defining edge with an upper rear section that is formed with positioning notches **332**, **333**. The positioning notches **332**, **333** are used to retain the backrest portion **32** at a selected vertical inclination relative to the seat portion **31**.

With further reference to FIG. **10**, the backrest portion **32** includes a pair of upright lateral frames **321**, each of which as a lower section with a distal end mounted pivotally on a respective one of the retaining plates **33**. The lower section of each of the upright lateral frames **321** is formed with a slide slot **322** that extends therealong. A retaining rod **34** has opposite ends that extend through the slide slot **322** in a respective one of the upright lateral frames **321** and the curved slot **331** in a respective one of the retaining plates **33**. Each of a pair of pull springs **35** has an upper end connected securely to the retaining rod **34** and a lower end connected securely to a respective one of the upright lateral frames **321**. The pull springs **35** pull the retaining rod **34** downwardly to establish tight contact between the retaining rod **34** and the lower slot-defining edges of the curved slots **331**. A pull

handle **36** is connected to the retaining rod **34** and extends transversely therefrom.

By operating the pull handle **36**, the opposite ends of the retaining rod **34** can be moved along the curved slots **331** to dispose the backrest portion **32** in one of a folded state, where the backrest portion **32** overlies the seat portion **31** and the opposite ends of the retaining rod **34** do not engage either of the positioning notches **332**, **333**, and an extended state, where the backrest portion **32** extends vertically relative to the seat portion **31** and the opposite ends of the retaining rod **34** engage a selected one of the positioning notches **332**, **333** to retain the backrest portion **32** at a selected vertical inclination relative to the seat portion **31**.

Referring back to FIGS. **5** and **6**, the detachable seat member **40** similarly includes a horizontal seat portion **41** and a backrest portion **42**. The seat portion **41** has front and rear parts formed with respectively with front and rear pairs of latching rods **43**, **44** that extend in opposite lateral directions. Each of the latching rods **43**, **44** has an enlarged head end **431**, **441**. When the seat portion **41** is retained on the stroller frame **20** by the seat-locking unit **28**, one of the pairs of latching rods **43**, **44** engages the pivotal retention seats **281**, whereas the other one of the pairs of latching rods **43**, **44** engages the latch retention seats **282**. To retain the detachable seat member **40** on the seat-mounting bars **23**, one of the pairs of latching rods **43**, **44** is slid rearwardly into the horizontally extending grooves **2811** in the pivotal retention seats **281** from the open front side of the latter. The seat portion **41** is then pivoted downwardly about said one of the pairs of latching rods **43**, **44** until the other one of the pairs of latching rods **43**, **44** abuts against the top side of the upper hooking ends **2831** of the hooking members **283**. At this time, due to the contour of the upper hooking ends **2831**, continued downward pivoting movement of the seat portion **41** will force the upper hooking ends **2831** to pivot forwardly so as to enable the other one of the pairs of latching rods **43**, **44** to extend into the downwardly extending grooves **2821** in the latch retention seats **282**. Thereafter, the hooking members **283** will move back to the normally closed state by the action of the biasing springs **285** such that the upper hooking ends **2831** of the hooking members **283** restrict upward movement of the other one of the pairs of latching rods **43**, **44** inside the downwardly extending grooves **2821**. Thus, upward pivoting movement of the seat portion **41** can be arrested by the upper hooking ends **2831** of the hooking members **283** at this time.

When the release rod **284** is pushed rearwardly against the action of the biasing springs **285** so as to dispose the hooking members **283** in the opened state, the upper hooking ends **2831** of the hooking members **283** cease to restrict upward movement of the other one of the pairs of latching rods **43**, **44** inside the downwardly extending grooves **2821**, as best illustrated in FIG. **8**. At this time, the seat portion **41** can be pivoted upwardly about said one of the pairs of latching rods **43**, **44** until the other one of the pairs of latching rods **43**, **44** ceases to extend into the downwardly extending grooves **2821**. Said one of the pairs of latching rods **43**, **44** is subsequently slid forwardly and outwardly of the horizontally extending grooves **2811**, thereby removing the seat portion **41** from the stroller frame **20**.

Like the seat portion **31** of the non-detachable seat member **30**, the rear end of the seat portion **41** is provided with a pair of upright retaining plates **45** at opposite lateral sides, respectively. Each of the retaining plates **45** is formed with a curved slot **451** and positioning notches **452**. Like the backrest portion **32** of the non-detachable seat member **30**, the backrest portion **42** includes a pair of upright lateral frames **421** mounted pivotally on the retaining plates **45**. A spring-loaded retaining rod **46** extends between and is slidable along the lateral frames **421**, and has opposite ends that extend into the curved slots **451** in the retaining plates **45**. A pull handle **47** is connected to the retaining rod **46**. Since the manner of disposing the backrest portion **42** in one of a folded state and an extended state is similar to that for the backrest portion **31** of the non-detachable seat member **30**, a detailed description of the same will be omitted herein for the sake of brevity.

Referring to FIG. **11**, the hand grip member **50** has a clamp portion that includes a pair of clamping seats **51**. Each of the clamping seats **51** is formed with a vertically extending clamping groove **52** for engaging a respective one of the upright handle portions of the push handle **24** (see FIG. **3**) or a respective one of the rear wheel-carrying rods **202**. Preferably, each of the clamping seats **52** has a groove-confining surface formed with a plurality of press strips **521** for pressing tightly against the respective upright handle portion of the push handle **24** or the respective rear wheel-carrying rod **202**. One of the lateral sides of each of the clamping seats **51** has a press cover **53** hinged thereto. The other one of the lateral sides of each of the clamping seats **51** has an outward strip projection **511**. The press cover **53** has a distal hooking edge **531** for engaging removably the strip projection **511**, thereby permitting retention of the hand grip member **50** on the stroller frame **20**. The hand grip member **50** further has a U-shaped hand grip portion **54** with opposite ends connected pivotally to the clamping seats **51** about a pair of pivot members **541** (only one is visible in FIG. **11**) that are transverse to the clamping grooves **52**. Each of a pair of retainers **55** (only one is visible in FIG. **11**) is mounted pivotally on a respective one of the clamping seats **51**, and is connected to one end of a respective one of the pivot members **541**. Each of the retainers **55** has a cam surface for frictional engagement with the respective clamping seat **51**. Thus, by pivoting the retainers **55** relative to the clamping seats **51**, the hand grip portion **54** can be locked tightly against the clamping seats **51** for retaining the former at a desired angle relative to the latter.

Referring back to FIG. **3**, the tray frame member **60** is mounted removably on the front wheel-carrying rods **201** of the stroller frame **20**, and includes a pair of clamping seats **61**. Since the manner of mounting of the clamping seats **61** on the front wheel-carrying rods **201** is similar to the mounting of the clamping seats **51** of the hand grip manner **50** on the stroller frame **20**, a detailed description of the same will be dispensed with herein for the sake of brevity. A tray **62** is mounted on and extends across the clamping seats **61** for placing objects thereon.

FIG. **12** illustrates the preferred embodiment in a first state of use. As shown, the detachable seat member **40** is mounted on the stroller frame **20** such that the child to be seated thereon can face forwardly.

FIG. **13** illustrates the preferred embodiment in a second state of use. As shown, the detachable seat member **40** is mounted on the stroller frame **20** such that the child to be disposed thereon can sit in a face-to-face relationship with another child seated on the non-detachable seat member **30**.

FIG. **14** illustrates the preferred embodiment in a third state of use. As shown, the detachable seat member **40** is mounted on the stroller frame **20** such that the child to be seated thereon can face forwardly. The backrest portion **32** of the non-detachable seat member **30** is disposed in the folded state. Instead of mounting the hand grip member **50** on the upright handle portions of the push handle **24**, the

hand grip member **50** is mounted on the rear wheel-carrying rods **202**. At this time, another child can stand on the rear footrest member **205** with both of his hands gripping at the hand grip member **50**.

FIG. **15** illustrates the preferred embodiment in a fourth state of use. Like the second state of use, the detachable seat member **40** is mounted on the stroller frame **20** such that the child to be seated thereon can face forwardly, the backrest portion **32** of the non-detachable seat member **30** is disposed in the folded state, and the hand grip member **50** is mounted on the rear wheel-carrying rods **202**. However, instead of standing on the rear footrest member **205**, the other child is seated on the non-detachable seat member **30** so as to face rearwardly and so as to share the backrest portion **42** of the detachable seat member **40** with the child that is seated on the latter. The hands of the child who is seated on the non-detachable seat member **30** can grip the hand grip member **50** at this time.

FIG. **16** illustrates the preferred embodiment in a fifth state of use. Unlike the state of use shown in FIG. **14**, the detachable seat member **40** is mounted on the stroller frame **20** such that the child to be seated thereon can face rearwardly.

FIG. **17** illustrates the preferred embodiment in a sixth state of use. Unlike the state of use shown in FIG. **15**, the detachable seat member **40** is mounted on the stroller frame **20** such that the child to be seated thereon can face rearwardly.

Referring once again to FIG. **4**, the preferred embodiment can be folded to reduce the storage space requirement thereof and to facilitate transport. To fold the stroller frame **20**, the locking members **27** are slid upwardly along the upright handle portions of the push handle **24**, thereby disengaging the locking members **27** from the stub projections **263** on the connecting seats **26**. The bridging bars **207** can be folded relative to the front wheel-carrying rods **201**, and the push handle **24** can be pivoted to a folded state relative to the connecting seats **26** at this time.

It has thus been shown that the multi-seat stroller of this invention can accommodate two children in many different ways that can enhance interaction between the children and the guardian pushing the stroller while the latter is in use. The object of the present invention is thus met.

While the present invention has been described in connection with what is considered the most practical and preferred embodiment, it is understood that this invention is not limited to the disclosed embodiment but is intended to cover various arrangements included within the spirit and scope of the broadest interpretation so as to encompass all such modifications and equivalent arrangements.

I claim:

1. A multi-seat stroller comprising:

a stroller frame having a front wheel-carrying portion, a rear wheel-carrying portion spaced apart from said front wheel-carrying portion in a longitudinal direction and mounted with a rear footrest member, and a seat-mounting portion extending in the longitudinal direction between said front and rear wheel-carrying portions;

a non-detachable seat member and a detachable seat member, each having a backrest portion and a horizontal seat portion provided with a retaining unit for mounting pivotally said backrest portion on said seat portion such that said backrest portion can be selectively disposed in one of a folded state, where said backrest portion overlies said seat portion, and an extended state, where said backrest portion extends vertically from said seat portion,

said seat portion of said non-detachable seat member being mounted fixedly on said seat-mounting portion of said stroller frame, said seat portion of said detachable seat member being movably disposed on said seat-mounting portion so as to be spaced apart from said non-detachable seat member in the longitudinal direction; and

a seat-locking unit provided on said seat-mounting portion of said stroller frame for retaining removably said seat portion of said detachable seat member on said seat-mounting portion.

2. The multi-seat stroller as claimed in claim **1**, wherein said seat portion of said detachable seat member has front and rear parts formed respectively with front and rear pairs of latching rods that extend in opposite lateral directions for engaging removably said seat-locking unit.

3. The multi-seat stroller as claimed in claim **1**, wherein said seat-locking unit includes:

a pair of pivotal retention seats mounted on said seat-mounting portion and spaced apart from each other in a transverse direction that is transverse to the longitudinal direction, said pivotal retention seats being formed with a respective horizontally extending groove for engaging slidably, pivotally and removably one of said front and rear pairs of latching rods;

a pair of latch retention seats mounted on said seat-mounting portion and spaced apart from each other in the transverse direction, said latch retention seats being further spaced apart from said pivotal retention seats in the longitudinal direction, and being formed with a respective downwardly extending groove for receiving the other one of said front and rear pairs of latching rods; and

a pair of hooking members mounted pivotally and respectively on said latch retention seats, said hooking members being movable relative to said latch retention seats between a closed state, where said hooking members extend across open top sides of said downwardly extending grooves in said latch retention seats for retaining the other one of said front and rear pairs of latching rods on said latch retention seats, and an opened state, where said hooking members cease to extend across the open top sides of said downwardly extending grooves to permit removal of the other one of said front and rear pairs of latching rods from said latch retention seats.

4. The multi-seat stroller as claimed in claim **3**, wherein said seat-locking unit further includes:

a release rod having opposite ends connected respectively to said hooking members; and

a biasing unit interconnecting said release rod and said stroller frame for applying a biasing force to said release rod so as to dispose said hooking members normally in the closed state.

5. The multi-seat stroller as claimed in claim **4**, wherein each of said latch retention seats is formed with a lateral stop flange to limit movement of the respective one of said hooking members toward the closed state.

6. The multi-seat stroller as claimed in claim **1**, further comprising a tray frame member mounted removably on said front wheel-carrying portion of said stroller frame.

7. The multi-seat stroller as claimed in claim **1**, further comprising a hand grip member mounted removably on said rear wheel-carrying portion of said stroller frame.

8. The multi-seat stroller as claimed in claim 7, wherein said hand grip member has a clamp portion for clamping removably said rear wheel-carrying portion of said stroller frame, a hand grip portion connected pivotally to said clamp portion, and a retainer for retaining said hand grip portion at a desired angle relative to said clamp portion.

9. The multi-seat stroller as claimed in claim 1, wherein said backrest portion includes a pair of upright lateral frames, each of which has a lower section formed with a slide slot that extends therealong, said retaining unit including:

a pair of upright retaining plates mounted respectively on opposite lateral sides of said seat portion, said lower sections of said upright lateral frames of said backrest portion being mounted pivotally and respectively on said retaining plates, each of said retaining plates being formed with a curved slot that curves upwardly and rearwardly, said curved slot having a lower slot-defining edge with an upper rear section that is formed with a positioning notch; and

a retaining rod having opposite ends that extend through said slide slot in a respective one of said upright lateral frames of said backrest portion and said curved slot in a respective one of said retaining plates, said opposite ends of said retaining rod being movable along said curved slots to dispose said backrest portion in one of the folded state, where said opposite ends of said retaining rod do not engage said positioning notches in said curved slots in said retaining plates such that said backrest portion can overlie said seat portion, and the extended state, where said opposite ends of said retaining rod engage said positioning notches such that said backrest portion can extend vertically from said seat portion.

10. The multi-seat stroller as claimed in claim 9, wherein said lower slot-defining edge of said curved slot in each of said retaining plates is formed with at least two of said positioning notches to permit retention of said backrest portion in a selected one of at least two vertical inclinations relative to said seat portion in the extended state.

11. The multi-seat stroller as claimed in claim 9, wherein said retaining unit further includes a spring unit interconnecting said retaining rod and said backrest portion and applying a biasing force to said retaining rod for establishing tight contact between said retaining rod and said lower slot-defining edges of said curved slots in said retaining plates.

12. The multi-seat stroller as claimed in claim 9, wherein said retaining unit further includes a pull handle connected to said retaining rod and extending transversely therefrom.

13. The multi-seat stroller as defined in claim 1, wherein:

said front wheel-carrying portion of said stroller frame includes a pair of front wheel-carrying rods, each of which has an upper portion, a lower portion provided with a front wheel, and an intermediate portion between said upper and lower portions;

said rear wheel-carrying portion of said stroller frame including a pair of rear wheel-carrying rods, each of which has an upper portion, a lower portion provided with a rear wheel, and an intermediate portion between said upper and lower portions, said rear wheel-carrying portion further including a push handle having a pair of upright handle portions, each of which has an intermediate section connected pivotally to said upper portion of a corresponding one of said rear wheel-carrying rods, and a lower section;

said seat-mounting portion of said stroller frame including a pair of seat-mounting bars, each of which has a front end connected pivotally to said intermediate portion of a corresponding one of said front wheel-carrying rods, and a rear end connected pivotally to said intermediate portion of a corresponding one of said rear wheel-carrying rods;

said stroller frame further including

a pair of linking bars, each of which has an intermediate portion connected pivotally to a corresponding one of said seat-mounting bars between said front and rear ends thereof, and an upper portion provided with a connecting seat, said lower section of each of said upright handle portions of said push handle being connected pivotally to said connecting seat on a respective one of said linking bars,

a pair of bridging bars, each of which has a front end connected pivotally to said upper portion of a corresponding one of said front wheel-carrying rods, and a rear end connected pivotally to said connecting seat on a respective one of said linking bars, and

a pair of locking members provided movably and respectively on said upright handle portions of said push handle and operable so as to engage said connecting seat on a respective one of said linking bars to retain said stroller frame in an unfolded position.

14. The multi-seat stroller as claimed in claim 13, wherein:

said rear footrest member is mounted on and extends across said rear wheel-carrying rods above said rear wheels;

said front wheel-carrying rods are mounted with a front footrest member above said front wheels; and

said linking bars have lower portions mounted with an intermediate footrest member.

15. The multi-seat stroller as claimed in claim 13, wherein said stroller frame further includes a collapsible canopy mounted pivotally on said bridging bars.

* * * * *

UNITED STATES PATENT AND TRADEMARK OFFICE

CERTIFICATE OF CORRECTION

PATENT NO. : 6,086,087
DATED : July 11, 2000
INVENTOR(S) : C.-H. Yang

It is certified that error appears in the above-identified patent and that said Letters Patent is hereby corrected as shown below:

COLUMN	LINE	ERROR
[73] Pg. 1, col. 1	Assignee	"Northbridge" should read --Northridge--

Signed and Sealed this

Eighth Day of May, 2001

Attest:

NICHOLAS P. GODICI

Attesting Officer

Acting Director of the United States Patent and Trademark Office