IN THE UNITED STATES DISTRICT COURT
FOR THE DISTRICT OF MASSACHUSETTS

BABY JOGGER, LLC, Plaintiff, v. MONAHAN PRODUCTS, LLC, D/B/A UPPABABY, Defendant.	Civil Action No. 1:24-CV-11582-ADB **LEAVE TO FILE EXCESS PAGES GRANTED ON MARCH 14, 2025 (ECF 56)**

PLAINTIFF BABY JOGGER, LLC'S
OPENING CLAIM CONSTRUCTION BRIEF

TABLE OF CONTENTS

I. INTRODUCTION 1

II. THE ASSERTED PATENTS 2

III. LEGAL STANDARDS 3

A. Claim Construction 4

B. Indefiniteness 5

IV. LEVEL OF ORDINARY SKILL IN THE ART 6

V. CLAIM TERMS NO LONGER DISPUTED 7

VI. DISPUTED CLAIM TERMS 7

A. "Connector portion" ('869 Patent, claims 1 and 24; '550 Patent, claims 1, 4 and 7; '231 Patent claim 4; '729 Patent, claim 4) 7

B. "Rotated with respect to" ('568 Patent, claim 1) 11

C. "Handle portion" ('231 Patent claim 1; '729 Patent, claim 1) 14

D. "Adjacent" ('869 Patent, claims 1 and 24; '231 Patent claim 1; '729 Patent, claim 1) 17

E. "Closer" ('550 Patent, claims 1 and 7) 21

F. "Substantially parallel" ('568 Patent, claim 1; '231 Patent, claim 1) 24

VII. CONCLUSION 27

TABLE OF AUTHORITIES

CASES **Page(s)**

Abbott Lab'ys v. Sandoz, Inc.,
544 F.3d 1341 (Fed. Cir. 2008).....4

ACTV, Inc. v. Walt Disney Co.,
346 F.3d 1082 (Fed. Cir. 2003).....19, 22

Anchor Wall Sys., Inc. v. Rockwood Retaining Walls, Inc.,
340 F.3d 1298 (Fed. Cir. 2003).....25

BASF Corp. v. Johnson Matthey Inc.,
875 F.3d 1360 (Fed. Cir. 2017).....25

Biosig Instruments, Inc. v. Nautilus, Inc.,
783 F.3d 1374 (Fed. Cir. 2015).....6, 25

Curtiss–Wright Flow Control Corp., v. Velan, Inc.,
438 F.3d 1374 (Fed. Cir. 2006).....17

Deere & Co. v. Bush Hog, LLC,
703 F.3d 1349 (Fed. Cir. 2012).....25

Finjan LLC v. ESET, LLC,
51 F.4th 1377, 1382 (Fed. Cir. 2022) 15

Halliburton Energy Servs., Inc. v. M-I LLC,
514 F.3d 1244 (Fed. Cir. 2008).....6, 23, 25

Helmsderfer v. Bobrick Washroom Equip., Inc.,
527 F.3d 1379 (Fed. Cir. 2008).....5

Hewlett-Packard Co. v. Mustek Sys., Inc.,
340 F.3d 1314 (Fed. Cir. 2003).....10, 13, 20

Interactive Gift Exp., Inc. v. Compuserve Inc.,
256 F.3d 1323 (Fed. Cir. 2001).....5

Laitram, LLC v. Ashworth Bros.,
No. 2022-1044, 2023 WL 3449148 (Fed. Cir. May 15, 2023).....13

Liebel–Flarsheim Co. v. Medrad, Inc.,
358 F.3d 898 (Fed. Cir. 2004).....16, 17

Markman v. Westview Instruments, Inc.,
517 U.S. 370 (1996).....4, 5

Markman v. Westview Instruments, Inc.,
52 F.3d 967 (Fed. Cir. 1995).....4

Martek Biosciences Corp. v. Nutrinova, Inc.,
579 F.3d 1363 (Fed. Cir. 2009).....26

MBO Labs., Inc. v. Becton, Dickinson & Co.,
474 F.3d 1323 (Fed. Cir. 2007).....13

Microsoft Corp. v. i4i Ltd. P'ship,
564 U.S. 91 (2011).....6

Nautilus, Inc. v. Biosig Instruments, Inc.,
572 U.S. 898 (2014).....5

Oakley, Inc. v. Sunglass Hut Int'l,
316 F.3d 1331 (Fed. Cir. 2003).....25

On–Line Techs., Inc. v. Bodenseewerk Perkin–Elmer GmbH,
386 F.3d 1133 (Fed. Cir. 2004).....20

Phillips v. AWH Corp.,
415 F.3d 1303 (Fed. Cir. 2005).....4, 6, 8, 17

Playtex v. Procter & Gamble,
400 F.3d 901 (Fed. Cir. 2005).....25

Praxair, Inc. v. ATMI, Inc.,
543 F.3d 1306 (Fed. Cir. 2008).....5, 6

SciMed Life Systems, Inc. v. Advanced Cardiovascular Systems, Inc.,
242 F.3d 1337 (Fed. Cir. 2001).....5

SiOnyx, LLC v. Hamamatsu Photonics K.K.,
270 F. Supp. 3d 390 (D. Mass. 2017).....8

Teleflex, Inc. v. Ficosa N. Am. Corp.,
299 F.3d 1313 (Fed. Cir. 2002).....14

Tinnus Enterprises, LLC v. Telebrands Corp.,
733 F. App'x 1011 (Fed. Cir. 2018).....25

Vitronics Corp. v. Conceptronic, Inc.,
90 F.3d 1576 (Fed. Cir. 1996).....4, 25, 26

Vivid Techs., Inc. v. Am. Sci. & Eng'g, Inc.,
200 F.3d 795 (Fed. Cir. 1999).....7, 23

X2Y Attenuators, LLC v. U.S. Int'l Trade Comm'n,
757 F.3d 1358 (Fed. Cir. 2014).....15

STATUTE(S) **Page(s)**

35 U.S.C.
§ 112.....5
§ 282.....6

REGULATION(S) **Page(s)**

37 C.F.R. § 1.57.....15

Pursuant to the Court's Scheduling Order (ECF 37 at 2), Plaintiff Baby Jogger, LLC ("Baby Jogger") submits its Opening Claim Construction Brief addressing those claim terms proposed for construction by Defendant Monahan Products, LLC, d/b/a UPPAbaby ("UPPAbaby") relating to Ex. A[1], U.S. Patent No. 8,955,869 (the "'869 Patent"); Ex. B, U.S. Patent No. 9,403,550 (the "'550 Patent"); Ex. C, U.S. Patent No. 11,192,568 (the "'568 Patent"); Ex. D, U.S. Patent No. 11,505,231 (the "'231 Patent"); and Ex. E, U.S. Patent No. 11,878,729 (the "'729 Patent") (collectively, the "Asserted Patents").

I. INTRODUCTION

The claims of the Asserted Patents in this case do not involve complex technology or highly technical language. While the patented invention was a novel advancement for strollers, the description of the invention in the asserted claims uses terms with meanings widely accepted by persons of ordinary skill in the art ("POSITA"). As a result, none of the disputed claim terms require construction. Despite this, UPPAbaby has proposed constructions beyond the plain and ordinary meaning for four claim terms and argues that two other claim terms are indefinite. In each of UPPAbaby's proposed constructions, it attempts to insert limitations into the claims that lack any support in the intrinsic record. Several of UPPAbaby's proposed constructions include language that is never used in the claims or the specification. This attempt to narrow the claims beyond their plain and ordinary meaning is improper and should be rejected. UPPAbaby's indefiniteness arguments fare no better. Each of the claim terms that UPPAbaby challenges as indefinite employs commonly understood words. Further, in the context of the claims and when read in view of the specification, a POSITA would readily understand the scope of the invention with reasonable certainty.

[1] Documents labeled "Ex." are attached as exhibits to the concurrently-filed Declaration of Robert J. Leonard in Support of Plaintiff's Opening Claim Construction Brief.

For these reasons and those set forth below, the Court should reject each of UPPAbaby's unsupported proposed constructions and indefiniteness challenges. The Court should instead find that no construction is necessary and adopt the plain and ordinary meaning for each of the disputed claim terms. To the extent that the Court finds it helpful to adopt a construction for the disputed claim terms, Baby Jogger further requests that the Court adopt Baby Jogger's proposed constructions, which reflect the plain and ordinary meaning of the disputed terms.

II. THE ASSERTED PATENTS

The Asserted Patents are generally directed to an innovative seat attachment for a stroller that can be used to convert a single stroller into a double stroller. Ex. A, '869 Patent, 1:14-17. As explained in the specifications, the Asserted Patents are directed to "stroller systems and more particularly to apparatuses . . . for a removable seat attachment for a stroller that is capable of supporting a seat including, but not limited to, a stroller seat, a baby seat, a bassinet, a pram, a car seat, or a baby carrier." Ex. C, '568 Patent, 1:37-42.

At the time of the invention, double strollers existed that were much larger than single strollers, making it difficult to maneuver double strollers through doors and down aisles in stores. Ex. A, '869 Patent, 1:39-42; Ex. C, '568 Patent, 1:56-60. Other existing double strollers attempted to incorporate a second seat but failed to provide adequate space for the child, reduced the capacity of the under-seat storage, and/or had components that were permanently affixed and thus not reversible or interchangeable. Ex. A, '869 Patent, 1:56-64; Ex. C, '568 Patent, 1:66-2:10. To overcome these shortcomings, Baby Jogger conceived of the invention disclosed in the Asserted Patents, which revolutionized single-to-double strollers by providing a sleek, compact solution by which the optional second (front) seat was reversible in direction, its placement did not impair under-seat storage capacity, and the second seat adapters allowed for interchangeability with other types of seats. ECF 29, ¶ 58.

Each of the Asserted Patents claims priority to U.S. Provisional Patent Application No. 61/119,920, filed on December 4, 2008.[2] The '869 Patent and the '550 Patent share a common specification. *See* Exs. A, B. The '568 Patent, '231 Patent, and '729 Patent also share a common specification that contains the same features disclosed in the specifications of the '869 Patent and the '550 Patent. *Compare* Exs. A, B *with* C, D, E. An embodiment of the invention is shown below, illustrating the conversion of a single stroller to a double stroller:

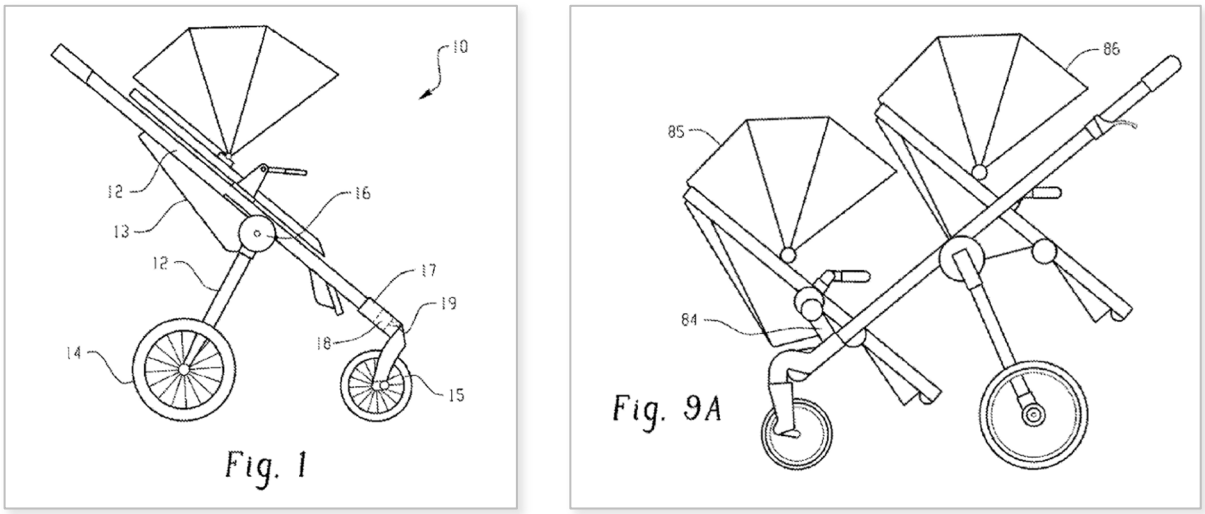

Ex. A, '869 Patent, Figs. 1, 9A.

More specific details regarding the relevant components and features of the invention disclosed in each of the Asserted Patents are provided as part of the analysis of the disputed claim terms where necessary.

III. LEGAL STANDARDS

A brief overview of applicable claim construction principles is provided below. To the extent specific principles bear on the relevant issues, they will be further discussed in context later in the brief.

[2] The '568 Patent, '231 Patent, and '729 Patent also claim priority to U.S. Provisional Patent Application No. 62/311,224, filed on March 21, 2016. *See* Exs. C, D, E. This second provisional application concerns additional features of the invention not at issue in this litigation.

A. Claim Construction

"The first step in most infringement suits is the procedure called 'claim construction,' where the scope of the claim is defined by the court." *Abbott Lab'ys v. Sandoz, Inc.*, 544 F.3d 1341, 1358 (Fed. Cir. 2008); *Markman v. Westview Instruments, Inc.*, 517 U.S. 370, 372 (1996) ("construction of a patent . . . is exclusively within the province of the court"). "It is a bedrock principle of patent law that the claims of a patent define the invention to which the patentee is entitled the right to exclude." *Phillips v. AWH Corp.*, 415 F.3d 1303, 1312 (Fed. Cir. 2005) (en banc) (internal quotations omitted). "[T]he words of a claim are generally given their ordinary and customary meaning," which is "the meaning that the term would have to a person of ordinary skill in the art in question at the time of the invention." *Id.* at 1312-13 (internal quotations omitted). Certain terms "may be readily apparent even to lay judges, and claim construction in such cases involves little more than the application of the widely accepted meaning of commonly understood words." *Id.* at 1314. "The construction that stays true to the claim language and most naturally aligns with the patent's description of the invention will be, in the end, the correct construction." *Id.* at 1316.

"It is well-settled that, in interpreting an asserted claim, the court should look first to the intrinsic evidence of record, i.e., the patent itself, including the claims, the specification and, if in evidence, the prosecution history." *Vitronics Corp. v. Conceptronic, Inc.*, 90 F.3d 1576, 1582 (Fed. Cir. 1996). "First, we look to the words of the claims themselves, both asserted and nonasserted, to define the scope of the patented invention." *Id.* But the claims should not be read in isolation; they "must be read in view of the specification, of which they are a part." *Markman v. Westview Instruments, Inc.*, 52 F.3d 967, 979 (Fed. Cir. 1995). "[T]he specification is always highly relevant to the claim construction analysis. Usually, it is dispositive; it is the single best guide to the meaning of a disputed term." *Vitronics*, 90 F.3d at 1582. Further, "the written description can

provide guidance as to the meaning of the claims, thereby dictating the manner in which the claims are to be construed, even if the guidance is not provided in explicit definitional format." *SciMed Life Systems, Inc. v. Advanced Cardiovascular Systems, Inc.*, 242 F.3d 1337, 1344 (Fed. Cir. 2001).

A claim term or phrase need not be construed if its meaning or usage is clear on its face, but if the claim language is "not clear on its face," then the court must consider the intrinsic evidence to resolve the lack of clarity. *Interactive Gift Exp., Inc. v. Compuserve Inc.*, 256 F.3d 1323, 1331 (Fed. Cir. 2001). "In most situations, an analysis of the intrinsic evidence alone will resolve any ambiguity in a disputed claim term. In such circumstances, it is improper to rely on extrinsic evidence." *Vitronics*, 90 F.3d at 1583. However, "[w]hen the intrinsic evidence is silent as to the plain meaning of a term, it is entirely appropriate for the district court to look to dictionaries or other extrinsic sources for context—to aid in arriving at the plain meaning of a claim term." *Helmsderfer v. Bobrick Washroom Equip., Inc.*, 527 F.3d 1379, 1382 (Fed. Cir. 2008).

B. Indefiniteness

A patent's specification must conclude "with one or more claims particularly pointing out and distinctly claiming the subject matter which the inventor or joint inventor regards as the invention." 35 U.S.C. § 112, ¶2; 35 U.S.C. § 112(b). The Supreme Court has held that "a patent is invalid for indefiniteness if its claims, read in light of the specification delineating the patent, and the prosecution history, fail to inform, with reasonable certainty, those skilled in the art about the scope of the invention." *Nautilus, Inc. v. Biosig Instruments, Inc.*, 572 U.S. 898, 901 (2014). A patent must be precise enough to provide clear notice of what is claimed, thereby "appris[ing] the public of what is still open to them." *Id*. at 909 (quoting *Markman,* 517 U.S. at 373). This standard "mandates clarity, while recognizing that absolute precision is unattainable." *Id*. at 910.

General claim construction principles apply to indefiniteness challenges. *Praxair, Inc. v. ATMI, Inc.*, 543 F.3d 1306, 1319 (Fed. Cir. 2008) ("Indefiniteness is a matter of claim construction,

and the same principles that generally govern claim construction are applicable to determining whether allegedly indefinite claim language is subject to construction."). "Of course, claims are not indefinite merely because they present a difficult task of claim construction." *Halliburton Energy Servs., Inc. v. M-I LLC*, 514 F.3d 1244, 1249 (Fed. Cir. 2008). Instead, where the meaning of the claim is discernible, the claim sufficiently avoids a finding of indefiniteness. *Id*. Because a patent is presumed valid under 35 U.S.C. § 282, an invalidity defense, including an indefiniteness challenge, must be "proved by clear and convincing evidence." *Biosig Instruments, Inc. v. Nautilus, Inc.*, 783 F.3d 1374, 1377 (Fed. Cir. 2015) (quoting *Microsoft Corp. v. i4i Ltd. P'ship,* 564 U.S. 91, 112 (2011)).

IV. LEVEL OF ORDINARY SKILL IN THE ART

It is well established that the words of a claim are given their ordinary and customary meaning, which "is the meaning that the term would have to a person of ordinary skill in the art in question at the time of the invention." *Phillips*, 415 F.3d at 1313. As a result, "[t]he inquiry into how a person of ordinary skill in the art understands a claim term provides an objective baseline from which to begin claim interpretation." *Id*. A POSITA reads and understands the claim terms "not only in the context of the particular claim in which the disputed term appears, but in the context of the entire patent, including the specification." *Id*.

In this case, a POSITA at the time of the invention would have several years of practical experience in the field of baby strollers, baby carriers, or similar products, and/or would have a degree in mechanical engineering, industrial design, or a related field of study and/or expertise, and/or advanced knowledge regarding baby products, baby strollers, and/or standards set by the American Society for Testing and Materials or similar organizations.

V. CLAIM TERMS NO LONGER DISPUTED

UPPAbaby initially proposed nine different claim terms for construction. These included the claim terms "seat attachment adapter"[3] and "stroller seat support portion,"[4] each of which were dropped by UPPAbaby before the parties filed their Joint Claim Construction Statement. ECF 54. After the submission of the parties' Joint Claim Construction Statement, UPPAbaby additionally withdrew the claim term "connects"[5] as a term that required construction. As a result, the construction of these three claim terms is not presently in dispute, and the plain and ordinary meaning must be applied to each of these claim terms. *See, e.g.*, *Vivid Techs., Inc. v. Am. Sci. & Eng'g, Inc.*, 200 F.3d 795, 803 (Fed. Cir. 1999) ("[O]nly those terms need be construed that are in controversy, and only to the extent necessary to resolve the controversy.").

VI. DISPUTED CLAIM TERMS

A. "Connector portion" ('869 Patent, claims 1 and 24; '550 Patent, claims 1, 4 and 7; '231 Patent claim 4; '729 Patent, claim 4)

Baby Jogger's Proposed Construction	UPPAbaby's Proposed Construction
Does not require construction. Alternatively, plain and ordinary meaning, which is "feature that is capable of connecting to a stroller frame"	Male mating element that attaches by insertion into a corresponding part.

Claims of each of the Asserted Patents, except the '568 Patent, incorporate the claim term "connector portion," including claims 1 and 24 of the '869 Patent; claims 1, 4, and 7 of the '550 Patent; claim 4 of the '231 Patent; and claim 4 of the '729 Patent. This claim term is used consistently across each of these patents to describe a feature (i.e., connector portion) that is capable of connecting to a stroller frame. For example, the claim language is used as follows:

[3] Found in claim 1 of the '568 Patent (Ex. C).
[4] Found in claim 1 of each of the '231 Patent (Ex. D) and '729 Patent (Ex. E).
[5] Found in claim 1 of the '231 Patent (Ex. D).

- "a ***connector portion*** capable of removably connecting to a stroller frame adjacent";[6]
- "a first ***connector portion*** releasably connected to the stroller frame" and "a second ***connector portion*** releasably connected to the stroller frame";[7]
- "wherein the first end [of the seat support element] comprises the ***connector portion*** and is releasably connected to the stroller frame";[8]
- "a first ***connector portion*** and a second ***connector portion***, the first ***connector portion*** configured to removably attach to a left side of the front wheel support portion, and the second ***connector portion*** configured to removably attach to a right side of the front wheel support portion".[9]

This claim term is used consistently and unambiguously to describe a feature of the invention that is capable of connecting to a stroller frame. This includes claim 4 of the '231 Patent and '729 Patent, where the connector portion is configured to connect to the front wheel support portion, which is simply a portion of the stroller frame.[10] In other words, the words of this claim term mean what they say; the connector portion is the portion that connects. No further construction is required, as the claim language is clear on its face. *Phillips*, 415 F.3d at 1314; *SiOnyx, LLC v. Hamamatsu Photonics K.K.*, 270 F. Supp. 3d 390, 408 (D. Mass. 2017) ("Where the patent does not provide any reason to depart from the plain and ordinary meaning of a term, the ordinary meaning controls.").

[6] Ex. A, '869 Patent, claim 1 (10:25-26, 10:32-33), claim 24 (12:10-11, 12:16-17). Any emphasis in the quoted claim language or specification in this brief has been added.
[7] Ex. B, '550 Patent, claim 1 (10:33-34, 10:39-40), claim 7 (11:9-10, 11:15-16).
[8] Ex. B, '550 Patent, claim 4 (10:53-55).
[9] Ex. D, '231 Patent, claim 4 (17:53-59); Ex. E, '729 Patent, claim 4 (17:51-57).
[10] Ex. D, '231 Patent, claim 4 (17:53-59); Ex. E, '729 Patent, claim 4 (17:51-57).

The specifications of the '869 Patent and the '550 Patent confirm this understanding, noting throughout that the connector portion is a feature that connects to the stroller frame. Ex. A, '869 Patent, 2:9-11 ("Embodiments of the invention are directed to a seat attachment for a stroller comprising a ***connector portion*** capable of connecting directly to a stroller frame")[11]; *id.,* 2:65-3:1 ("Embodiments of the double stroller comprise a stroller frame comprising wheels, the frame, a first seat and a ***connector portion*** connected to the frame"); *id*., 4:25-28 ("an embodiment of the seat attachment for converting a single stroller into a double stroller comprises at least one ***connector portion*** capable of connecting to a stroller frame"); *id.,* 5:12-14 ("The ***connector portions*** are preferably on the front of the stroller to allow the seat attachment and the seat to be connected to the front of the stroller 10"); *id*., 5:22-25 ("An embodiment of a seat attachment of stroller 10 will comprise corresponding ***connector portions*** capable of connecting to the stroller frame at the attachment portions 17"); *id*., 9:58-60 ("The ***connector portion*** is capable of connecting the seat attachment to the frame.").

The specifications of the '231 Patent and the '729 Patent also confirm this clear understanding. Ex. D, '231 Patent, 4:5-8 ("an embodiment of the seat attachment for converting a single stroller into a double stroller can include at least one ***connector portion*** capable of connecting to a stroller frame")[12]; *id*., 4:65-5:1 ("The seat attachment for the stroller 10 can further include corresponding ***connector portions*** capable of connecting to the stroller frame at the attachment portions 17"); *id*., 12:21-25 ("As shown in FIG. 9, the seat support element 84 can also include a connector portion 21. The ***connector portion*** 21 is capable of connecting the seat

[11] The '869 Patent and '550 Patent share a common specification. *See* Exs. A, B. As a result, citations are to the '869 Patent only.
[12] The '231 Patent and '729 Patent share a common specification. *See* Exs. D, E. As a result, citations are to the '231 Patent only.

attachment to the frame 81 via the attachment portion 17 and the slot 18."). Because the claim language and the specification are clear, and would certainly be clear to a POSITA, no construction is necessary for the claim term "connector portion." But to the extent that the Court determines that construction is necessary, the plain and ordinary meaning should apply, which, as demonstrated above, is a "feature that is capable of connecting to a stroller frame."

UPPAbaby's proposed construction of a "male mating element that attaches by insertion into a corresponding part" must be rejected as it lacks any support in the claims or the specification. The phrase "male mating element" is never mentioned or discussed from the intrinsic record, nor are any of the claims limited to "insertion into a corresponding part." Instead, UPPAbaby appears to be attempting to add limitations that are not present in the claim language or supported by the specification to improperly narrow the scope of what is claimed. *Hewlett-Packard Co. v. Mustek Sys., Inc.*, 340 F.3d 1314, 1324 (Fed. Cir. 2003) ("We cannot construe the claim to add a limitation not present in the claim itself.").

As shown in the claim language above, the connector portions are examples of a feature that can be removably/releasably connected or releasably attached to the stroller frame. The specification provides that "[r]eleasable connections include, but are not limited to, buttons, snaps, friction fittings, interference fits, threaded connections, locking tabs, keyed connections, other fasteners, or the like." Ex. D, '231 Patent, 4:30-33. Further, the specification also describes that any attachment mechanism can be utilized to connect the seat attachment to the stroller, "such as, but not limited to, a U-shaped bracket, a U-bolt, a pipe clamp, O-shaped bracket, screw, bolt, or other clamping or attachment means." *Id.*, 6:50-54. Thus, UPPAbaby's proposed construction is directly contradicted by the specification, which permits any number of mechanisms for connections, such as connecting to the frame. UPPAbaby's proposed construction is not only

unsupported, but it is contrary to the intrinsic record, and should be rejected.

The claim term "connector portion" does not require construction, as the language is unambiguous. To the extent the Court determines that construction would be helpful, it should reject UPPAbaby's unsupported proposed construction and adopt the plain and ordinary meaning, which is a "feature that is capable of connecting to a stroller frame."

B. "Rotated with respect to" ('568 Patent, claim 1)

Baby Jogger's Proposed Construction	UPPAbaby's Proposed Construction
Does not require construction. Alternatively, plain and ordinary meaning, which is "one component rotated relative to another component"	Rotatably coupled at a common pivot point.

The claim term "rotated with respect to" is found only in claim 1 of the '568 Patent and describes that one component of the stroller frame can be rotated relative to another component when unfolded from a folded configuration or vice versa. More specifically, claim 1 of the '568 Patent provides in part:

> a first front wheel support frame rotatably adjusted to be substantially parallel with respect to the first upper tube support frame when the stroller frame is unfolded from a folded configuration;
>
> a second front wheel support frame rotatably adjusted to be substantially parallel with respect to the second upper tube support frame when the stroller frame is unfolded from a folded configuration;
>
> a first back wheel support frame ***rotated with respect to*** the first upper tube support frame; and
>
> a second back wheel support frame ***rotated with respect to*** the second upper tube support frame;

Ex. C, '568 Patent, 17:27-38. This portion of the claim describes that the stroller frame can be rotatably adjusted from a folded configuration to an unfolded configuration by rotating components of the frame relative to other components. The disputed language describes the back wheel support frame (81b) being rotated with respect to the second upper tube support frame (81c).

This is another example of the claims incorporating commonly understood terms in which the meaning is clear on its face. Because the claim language is unambiguous and would be readily understood by a POSITA, no construction is necessary.

The specification further explains that an exemplary stroller frame can have folding mechanisms that "can be coupled, either directly or indirectly to the corresponding front wheel support frame 81*a*, back wheel support frame 81*b*, and upper tube support frame 81*c* on the corresponding side (left and right) of the stroller 80." *Id.*, 9:38-44. As shown in the figures below, the rotation of these components of the stroller frame relative to each other "allows the stroller 80 to be folded into a more compact size for storing or transportation." *Id.*, 9:50-53.

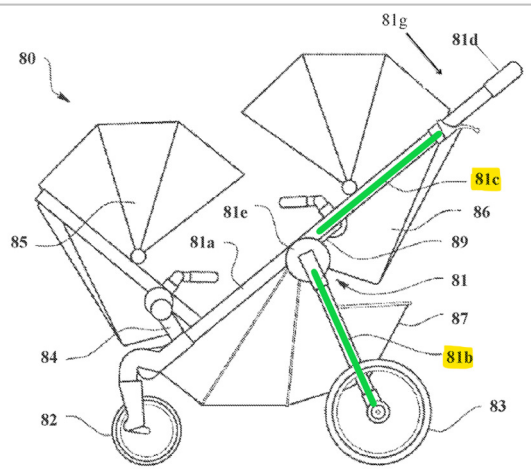

FIGURE 8A

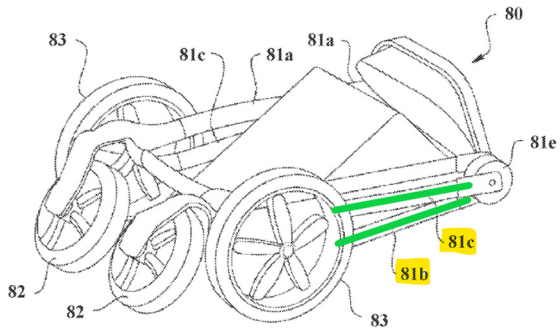

FIGURE 8B

Id., Figs. 8A, 8B (annotated). The claim language describing the back wheel support frame rotated with respect to the upper tube support frame describes the relative movements of these components when the stroller is folded or unfolded. This is another example of the claim language meaning exactly what it says. Given this plain language, no construction is necessary. To the extent the Court determines that construction is necessary, the plain and ordinary meaning of "rotated with respect to" should be adopted, which is "one component rotated relative to another component."

UPPAbaby's proposed construction of "rotatably coupled at a common pivot point" lacks any basis in the claims or the specification. Neither the phrase "common pivot point" or "pivot point" is found in the claim language or the specification. Further, the intrinsic record never discusses a limitation in which the back wheel support frame and the upper tube support frame are rotatably coupled at a common pivot point. Nor does the intrinsic record require that the upper tube support frame have a pivot point, let alone a common pivot point with the back wheel support frame. The claims also contain no limitation that the upper tube support frame rotates at all. All that is required is that the back wheel support frame is rotated with respect to the upper tube support frame. Ex. C, '568 Patent, 17:25-38.[13] UPPAbaby's attempt to insert these additional limitations into the claims is improper and unsupported. *Hewlett-Packard*, 340 F.3d at 1324.

As discussed above, the specification expressly discloses an embodiment in which "each folding mechanism 81*e* can be coupled, ***either directly or indirectly*** to the corresponding front wheel support frame 81*a*, back wheel support frame 81*b*, and upper tube support frame 81*c*." Ex. C, '568 Patent, 9:40-43. Given that the folding mechanism can be indirectly coupled to the front wheel support frame, there would not necessarily be a single "common pivot point." UPPAbaby appears to rely solely on an exemplary embodiment shown in the figures, which illustrate a folding mechanism having a single pivot point. However, it is improper to limit the claims to a single embodiment. *See, e.g.*, *Laitram, LLC v. Ashworth Bros.*, No. 2022-1044, 2023 WL 3449148, at *6 (Fed. Cir. May 15, 2023) ("a claim should not be construed as limited to a single embodiment absent some clear indication that a claim relates only to that embodiment."); *MBO Labs., Inc. v. Becton, Dickinson & Co.,* 474 F.3d 1323, 1333 (Fed. Cir. 2007) ("patent

[13] This claim also requires that the front wheel support frame be rotatably adjusted with respect to the upper tube support frame. Ex. C, '568 Patent, 17:27-34. But there is no requirement that the upper tube support frame rotates at all.

coverage is not necessarily limited to inventions that look like the ones in the figures. To hold otherwise would be to import limitations onto the claim from the specification, which is fraught with danger."); *Teleflex, Inc. v. Ficosa N. Am. Corp.*, 299 F.3d 1313, 1324 (Fed. Cir. 2002) (noting that it is the "'cardinal sin' of claim construction [to] import[] limitations from the written description into the claims.").

The meaning of the claim term "rotated with respect to" is unambiguous and requires no construction. To the extent the Court determines that construction would be helpful, it should reject UPPAbaby's proposed construction and adopt the plain and ordinary meaning, which is "one component rotated relative to another component."

C. "Handle portion" ('231 Patent claim 1; '729 Patent, claim 1)

Baby Jogger's Proposed Construction	UPPAbaby's Proposed Construction
Does not require construction. Alternatively, plain and ordinary meaning, which is "portion of frame coupled to the left and right upper tube support frame"	Lateral frame portion that is grasped when pushing the stroller.

The claim term "handle portion" is found in claim 1 of the '231 Patent and '729 Patent. For example, claim 1 of the '231 Patent provides in part:

> a frame including a ***handle portion***, a rear wheel support portion, a front wheel support portion and a folding mechanism connecting the front wheel support portion and the ***handle portion*** in both an unfolded configuration and in a folded configuration,
>
> wherein the folding mechanism connects the rear wheel support portion to the front wheel support portion and the ***handle portion***,
>
> wherein the frame includes a stroller seat support portion positioned at a first vertical position adjacent the ***handle portion***, and
>
> wherein the front wheel support portion and the ***handle portion*** are substantially parallel when the frame is in the unfolded configuration;
>
> . . .

> the rear wheel support portion is disposed adjacent to both the front wheel support portion and the ***handle portion*** when the frame is in the folded configuration . . . .

Ex. D, '231 Patent, 17:14-25, 17:39-42.[14] The specification identifies an embodiment of the invention as having "a handle portion 81d having a first end coupled to the left upper tube support frame 81c and a distal second end coupled to the right upper tube support frame 81c." *Id.*, 9:1-4.

Embodiments of the invention are further described in the specification of the '869 Patent, which is incorporated by reference[15] into the specifications of the '231 Patent and the '729 Patent. *Finjan LLC v. ESET, LLC*, 51 F.4th 1377, 1382 (Fed. Cir. 2022) ("Patents that are incorporated by reference are 'effectively part of the host patents as if they were explicitly contained therein.'") (quoting *X2Y Attenuators, LLC v. U.S. Int'l Trade Comm'n*, 757 F.3d 1358, 1362–63 (Fed. Cir. 2014)); *see also* 37 C.F.R. § 1.57(c), (d). In the specification of the '869 Patent, the "handle portion" is a part of the stroller frame, described as being a part of the upper portion of the stroller frame: "The frame 81 of the embodiment of the stroller 80 further comprising a folding mechanism 81*d* that connects front wheel support portion 81*a*, a back wheel support portion 81*b*, and a handle portion 81*c*." Ex. A, '869 Patent, 8:56-59.

Both specifications describe the handle portion as part of the upper portion of the stroller frame. This is further illustrated in the figures of each specification:

[14] Claim 1 of the '729 Patent includes similar language.
[15] Ex. D, '231 Patent, 1:7-24 ("the contents of which are all incorporated herein by reference."); Ex. E, '729 Patent, 1:7-24.

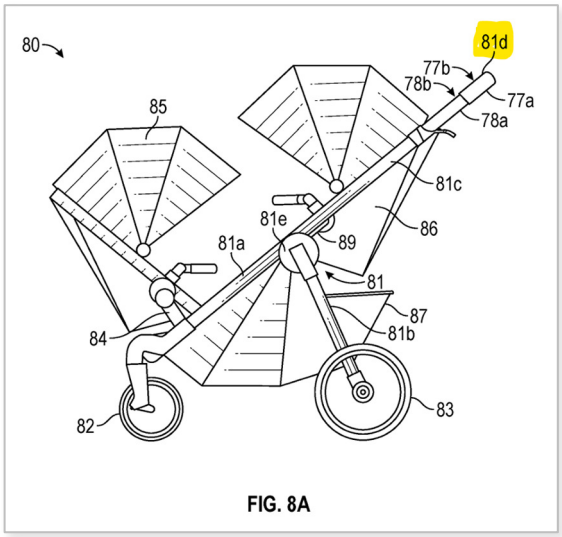

Ex. D, '231 Patent, Fig. 8A.

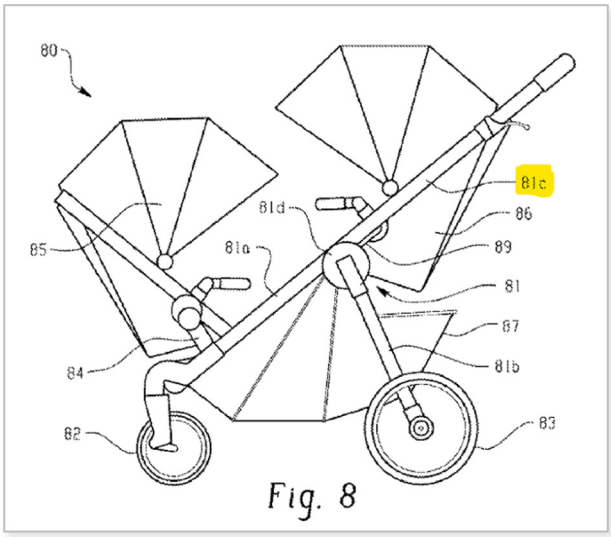

Ex. A, '869 Patent, Fig. 8.

Based on the intrinsic record, this claim term has no special meaning in the art and is unambiguous. Thus, no construction is required. But to the extent that a construction would be helpful, the plain and ordinary meaning of this claim term should be adopted, which is described in the specification as the "portion of frame coupled to the left and right upper tube support frame."

UPPAbaby's proposed construction of a "lateral frame portion that is grasped when pushing the stroller" lacks any support in the claims or the specification and should be rejected. Neither the claim language nor the specification contains any language that supports this proposed construction. The phrase "lateral frame" does not appear in the intrinsic record, nor is there any discussion that the "handle portion" is the "portion that is grasped when pushing the stroller." Instead, the "handle portion" is clearly described as part of the upper portion of the stroller frame, not the "lateral frame portion that is grasped when pushing the stroller."

UPPAbaby's proposed construction should also be rejected for violating the doctrine of claim differentiation by attempting to read a limitation of a dependent claim into an independent claim. "[T]he presence of a dependent claim that adds a particular limitation raises a presumption that the limitation in question is not found in the independent claim." *Liebel–Flarsheim Co. v.*

Medrad, Inc., 358 F.3d 898, 910 (Fed. Cir. 2004). "[C]laim differentiation takes on relevance in the context of a claim construction that would render additional, or different, language in another independent claim superfluous." *Curtiss–Wright Flow Control Corp., v. Velan, Inc.,* 438 F.3d 1374, 1381 (Fed. Cir. 2006); *Phillips,* 415 F.3d at 1324. Here, dependent claim 14 of both the '231 Patent and '729 Patent provides:

> The stroller system of claim 13, ***wherein the handle portion includes a pair of parallel support members and a crossbar***, wherein the parallel support members of the handle portion connect to the parallel support members of the front wheel support portion via the folding mechanism, and wherein the parallel support members of the handle portion and of the front wheel support portion extend diagonally downwards from the crossbar of the handle portion.

Ex. D, '231 Patent, 18:32-39; Ex. E, '729 Patent, 18:31-38. This dependent claim adds the limitation of the handle portion comprising a "crossbar," which is the lateral portion that is grasped when pushing the stroller. But UPPAbaby's proposed construction improperly attempts to read into claim 1 the limitation of the crossbar, rendering dependent claim 14 superfluous. For this additional reason, UPPAbaby's proposed construction must be rejected.

The claim term "handle portion" does not require construction as its meaning in view of the intrinsic record would be clear to a POSITA. To the extent the Court believes a construction is necessary, it should reject UPPAbaby's unsupported and improper proposed construction and adopt the plain and ordinary meaning for "handle portion," which is the "portion of frame coupled to the left and right upper tube support frame."

D. "Adjacent" ('869 Patent, claims 1 and 24; '231 Patent claim 1; '729 Patent, claim 1)

Baby Jogger's Proposed Construction	UPPAbaby's Proposed Construction
Does not require construction. Alternatively, plain and ordinary meaning, which is "next to" or "nearby"	Next to and having contact with.

The claim term "adjacent" is found in claims 1 and 24 of the '869 Patent, claim 1 of the

’231 Patent, and claim 1 of the ’729 Patent to describe the location of claimed features of the invention relative to other claimed features. For example, claim 1 of the ’869 Patent describes separate right and left attachment portions that each comprise a connector portion that is adjacent to the front wheels of the stroller:

> a separate left attachment portion, wherein the left attachment portion comprises: a connector portion capable of removably connecting to a stroller frame ***adjacent*** a left front wheel of the stroller . . .
>
> a separate right attachment portion, wherein the right attachment portion comprises: a connector portion capable of removably connecting to a stroller frame ***adjacent*** a right front wheel of the stroller . . .

Ex. A, ’869 Patent, 10:23-27, 10:30-34.[16] The claims here use common language that is unambiguous to describe the relative positioning of the claimed features. The claims explain that the connector portions are capable of connecting to the frame adjacent to the left and right front wheels of the stroller. This is another example of the claim term meaning exactly what it says.

The specification provides exemplary embodiments of the invention, illustrating the relative positioning of the connector portions (*see supra* Part VI.A.) connecting to the frame adjacent to the front wheels:

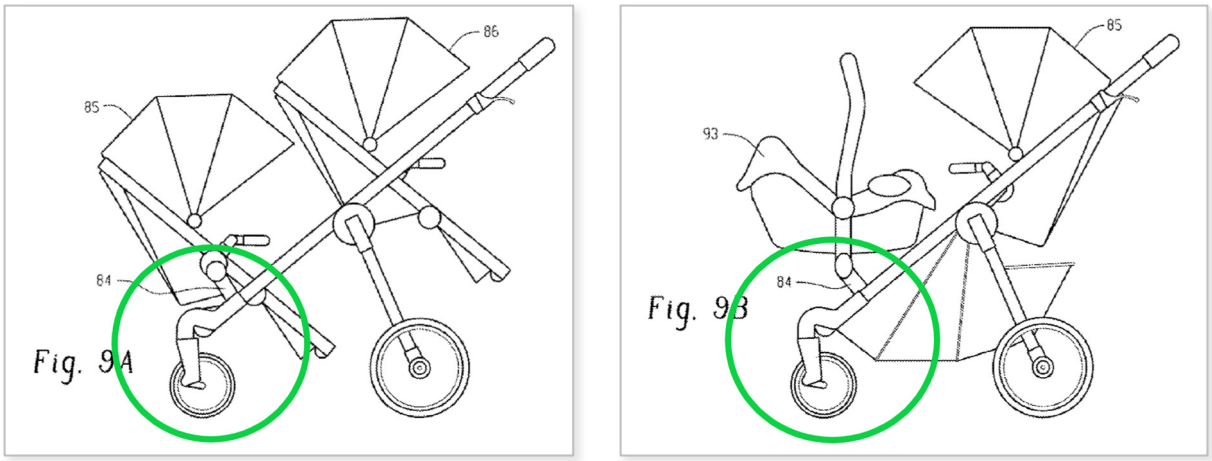

Ex. A, ’869 Patent, Figs. 9A, 9B (annotated); *see also id.*, Figs. 8, 9C-9F.

[16] Claim 24 of the ’869 Patent contains similar language. Ex. A, ’869 Patent, 12:9-12, 12:15-18.

Claim 1 of both the '231 Patent and the '729 Patent similarly use the term "adjacent" to describe the location of claimed features of the invention relative to other claimed features. For example, claim 1 of the '231 Patent provides:

> wherein the frame includes a stroller seat support portion positioned at a first vertical position ***adjacent*** the handle portion
>
> …
>
> the rear wheel support portion is disposed ***adjacent*** to both the front wheel support portion and the handle portion when the frame is in the folded configuration

Ex. D, '231 Patent, 17:21-23, 17:39-42.[17] Like the use of this claim term in claims 1 and 24 of the '869 Patent, the claims here use common language that is unambiguous to describe the relative positioning of the claimed features. The claims explain that the first seat support portion is positioned adjacent to the handle portion, and the rear wheel support portion is adjacent to both the front wheel support portion and the handle portion when the frame is folded. This claim term is clear when read in context with the surrounding language of the claims. *ACTV, Inc. v. Walt Disney Co.,* 346 F.3d 1082, 1088 (Fed. Cir. 2003) ("the context of the surrounding words of the claim also must be considered in determining the ordinary and customary meaning of those terms"). Because this claim term is describing the position of components relative to other components of the claim invention, a POSITA would understand the scope of this claim term. As a result, no construction is required.

UPPAbaby's proposed construction of "next to and having contact with" attempts to add a limitation that is not found anywhere in the intrinsic record. Baby Jogger agrees that if construction were necessary, the plain and ordinary meaning of "adjacent" would be "next to." But UPPAbaby goes too far in adding the additional limitation of "and having contact with." There is no language

[17] Claim 1 of the '729 Patent contains similar language. Ex. E, '729 Patent, 17:19-21, 17: 38-40.

in the claims or the specification that requires the connector portions to be "next to ***and having contact with***" the front wheels of the stroller. *See Hewlett-Packard*, 340 F.3d at 1324. The same is true of claim 1 of the '231 Patent and '729 Patent, which requires a stroller seat support to be adjacent to the handle portion and the rear wheel support portion to be adjacent to both the front wheel support portion and handle portion in the folded configuration. Nowhere in the language of the claims, or the specification, is there a requirement that these various components be in contact with each other. As a result, UPPAbaby's proposed construction must be rejected.

As shown above, embodiments in the specification illustrate that these components are adjacent to (or "next to" each other) but are not in contact with each other. *See, e.g.*, Ex. A, '869 Patent. Figs. 8, 9A-9F; Ex. D, '231 Patent, Figs. 8A-8H. UPPAbaby is again attempting to add limitations to the claims that lack any support in the intrinsic record and are contradicted by that record. *On–Line Techs., Inc. v. Bodenseewerk Perkin–Elmer GmbH,* 386 F.3d 1133, 1138 (Fed. Cir. 2004) ("[A] claim interpretation that excludes a preferred embodiment from the scope of the claim is rarely, if ever, correct.") (internal quotations omitted).

The claim term "adjacent" is a commonly understood word that does not require construction. To the extent the Court believes a construction is necessary, it should reject UPPAbaby's unsupported and improper proposed construction and adopt the plain and ordinary meaning for "adjacent," which is "next to" or "nearby." This plain and ordinary meaning is supported by the widely accepted meaning of this term, as well as the dictionary definitions, which define "adjacent" as "not distant: nearby" and "next to or very near something else." Ex. F, Merriam-Webster.com Dictionary, https://www.merriam-webster.com/dictionary/adjacent (last accessed March 27, 2025); Ex. G, Oxford English Dictionary, https://www.oed.com/dictionary/adjacent_adj?tab=meaning_and_use#12665105 (last accessed March 28, 2025).

E. "Closer" ('550 Patent, claims 1 and 7)

Baby Jogger's Proposed Construction	UPPAbaby's Proposed Construction
Not indefinite. The relevant term is "closer to" which does not require construction. Alternatively, plain and ordinary meaning, which is "being nearer in space"[18]	The term "closer" as used in the claims is indefinite.

This claim term is found in claims 1 and 7 of the '550 Patent to describe the location of claimed features of the invention relative to other claimed features. Ex. B, '550 Patent, 10:24-43, 11:1-19. For example, claim 1 describes the relative positioning of the first seat and second seat attachment:

> ***a first seat*** coupled to the stroller frame at a first vertical position of the stroller frame ***closer to a handle of the stroller*** and configured to hold a first child in the stroller;
>
> ***a second seat attachment*** coupled to the stroller frame at a second vertical position substantially below the first vertical position and ***closer to the front wheels*** . . .

Id., 10:24-29.[19] Thus, the claims unambiguously describe the first seat as being closer to the handle of the stroller, whereas a second seat attachment is closer to the front wheels. *Id*. This language describes the relative positioning of these claimed features using terms that would be commonly understood by a POSITA. Figure 8 of the '550 Patent illustrates an embodiment of the invention and provides further support for the location of the first seat (86) being closer to the handle and the second seat attachment (85) being closer to the front wheels:

[18] Baby Jogger's proposed construction for the plain and ordinary meaning of this claim term in the parties' Joint Claim Construction Statement was "being near in space." ECF 54. A minor update has been made to this proposed construction, which is not "being near**er** in space," to better reflect the relative nature of the claim term "closer."

[19] Claim 7 of the '550 Patent contains similar language. Ex. B, '550 Patent, 11:1-6.

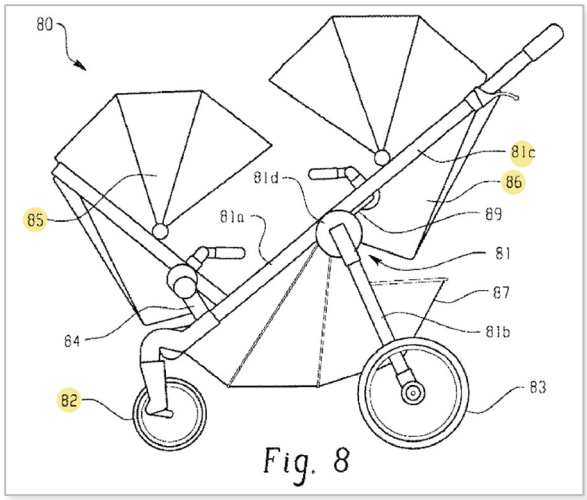

Id., Fig. 8; *see also id.* Figs. 9A-9F. The figures illustrate that "[t]he stroller seat 86 is located adjacent to handle portion [81c]" (*id.*, 9:14-15), whereas the "[t]he front seat 85 may be positioned substantially over the front wheels [82]" (*id.*, 9:44-16). Looking not just at the disputed claim term but the surrounding language as well, what is described in this claim language is clear. *See, e.g.*, *ACTV.,* 346 F.3d at 1088 ("the context of the surrounding words of the claim also must be considered in determining the ordinary and customary meaning of those terms"). As a result, given the clear claim language, a POSITA would understand the scope of this claim language and the invention with reasonable certainty. Thus, the term is not indefinite.

Claim 1 of the '550 Patent also describes the relative positioning of the first and second connector portions as being connected to the stroller frame "closer to" the left and right front wheels, respectively:

> ***a first connector portion*** releasably connected to the stroller frame ***closer to a left front wheel*** . . .
>
> ***a second connector portion*** releasably connected to the stroller frame ***closer to a right front wheel*** . . .

Ex. B, '550 Patent, 10:33-34, 10:39-40.[20] The claim language contains no ambiguity regarding the

[20] Claim 7 of the '550 Patent contains similar language. Ex. B, '550 Patent, 11:9-10, 11:15-16.

positioning of these components, with the first connector portion being closer to the left front wheel and the second connector portion being closer to the right front wheel. *Id*. Again, the claim language is clear such that a POSITA would understand the scope of this claim language with reasonable certainty.

UPPAbaby asserts that the term "closer" is indefinite, but given the clear descriptions in the claim language, it is unclear what UPPAbaby's basis is for this position. To establish indefiniteness, "an accused infringer [must] show by clear and convincing evidence that a skilled artisan could not discern the boundaries of the claim based on the claim language, the specification, and the prosecution history, as well as her knowledge of the relevant art area." *Halliburton Energy Servs.*, 514 F.3d at 1249-50. UPPAbaby cannot satisfy this strict standard.

The claim term "closer" is unambiguous, has a widely accepted meaning, and does not require construction. Further, no construction is necessary since UPPAbaby did not propose a construction for this claim. As a result, there is no dispute regarding the meaning of this claim term. *Vivid Techs.*, 200 F.3d at 803 ("[O]nly those terms need be construed that are in controversy, and only to the extent necessary to resolve the controversy."). To the extent further construction is necessary, the plain and ordinary meaning of "closer" or "closer to" should apply. Here, the plain and ordinary meaning of "closer" or "closer to" is "being nearer in space." This is supported by the claim language, which describes features as being "closer to" another feature, or being nearer in space to one another. This proposed construction is further supported by the dictionary definition of "close," which is defined as "being near in time, space, effect, or degree." Ex. H, Merriam-Webster Dictionary website, https://www.merriam-webster.com/dictionary/close (last accessed March 27, 2025).

Because the meaning of the claim term "closer" is unambiguous, it is not indefinite and requires no construction. To the extent the Court determines that construction would be helpful, it should adopt the plain and ordinary meaning, which is "being nearer in space."

F. "Substantially parallel" ('568 Patent, claim 1; '231 Patent, claim 1)

Baby Jogger's Proposed Construction	UPPAbaby's Proposed Construction
Not indefinite. Does not require construction. Alternatively, plain and ordinary meaning, which is "the parallel relationship is not a strict relationship"	The term "substantially parallel" as used in the claims is indefinite.

This claim term is found in claim 1 of the '568 Patent and the '231 Patent to describe the relative orientation of components of the stroller when in the unfolded configuration. Ex. C, '568 Patent, 17:26-34; Ex. D, '231 Patent, 17:23-25. In claim 1 of the '568 Patent, this term is used to describe the substantially parallel orientation of the first and second front wheel support portions relative to the first and second upper tube support portions when in an unfolded configuration. Ex. C, '568 Patent, 17:26-34. The same is true of claim 1 of the '231 Patent, which describes the substantially parallel orientation of the front wheel support portion relative to the handle portion. Ex. D, '231 Patent, 17:23-25. Not only is this claim language definite, but the plain and ordinary meaning of this claim term requires nothing more than the application of the widely accepted meaning of commonly understood words. The claim terms mean exactly what they say. While the meaning of this claim term is readily apparent to even a layperson, the specification expressly defines this claim term, and as a result, it is not indefinite.

UPPAbaby asserts that the term "substantially parallel" is indefinite, but given the clear description in the claim language, the widely accepted meaning of this language, and the express definition provided in the specification, it is unclear what UPPAbaby's basis is for this position. To establish indefiniteness, "an accused infringer [must] show by clear and convincing evidence that a skilled artisan could not discern the boundaries of the claim based on the claim language,

the specification, and the prosecution history, as well as her knowledge of the relevant art area." *Halliburton Energy Servs.*, 514 F.3d at 1249-50. UPPAbaby cannot satisfy this strict standard.

The claim language clearly describes the relative positions of components with respect to each other as "substantially parallel." Ex. C, '568 Patent, 17:26-34; Ex. D, '231 Patent, 17:23-25. A POSITA would readily understand that "substantially parallel" permits some deviation from exactly parallel. *See, e.g.*, *Anchor Wall Sys., Inc. v. Rockwood Retaining Walls, Inc.*, 340 F.3d 1298, 1311 (Fed. Cir. 2003) (the phrase "generally parallel" is not indefinite and it "envisions some amount of deviation from exactly parallel"); *see also Playtex v. Procter & Gamble*, 400 F.3d 901, 907 (Fed. Cir. 2005) ("substantially" and "about" are commonly used claim terms constituting "meaningful modifier[s] implying 'approximate,' rather than 'perfect'").

In an attempt to support its indefiniteness position, UPPAbaby may argue that this language lacks reasonable certainty because it uses relative terms. But the Federal Circuit has explained "that relative terms such as 'substantially' do not render patent claims so unclear as to prevent a person of skill in the art from ascertaining the scope of the claim." *Tinnus Enterprises, LLC v. Telebrands Corp.*, 733 F. App'x 1011, 1018 (Fed. Cir. 2018) (*Deere & Co. v. Bush Hog, LLC*, 703 F.3d 1349, 1359 (Fed. Cir. 2012)). Because the claim language provides a POSITA with reasonable certainty regarding the scope of the claim, a POSITA would require no further explanation to understand the plain and ordinary meaning of "substantially parallel." *BASF Corp. v. Johnson Matthey Inc.*, 875 F.3d 1360, 1365 (Fed. Cir. 2017) ("'Reasonable certainty' does not require 'absolute or mathematical precision.'") (quoting *Biosig*, 783 F.3d at 1381); *Oakley, Inc. v. Sunglass Hut Int'l*, 316 F.3d 1331, 1341 (Fed. Cir. 2003) ("a patentee need not define his invention with mathematical precision in order to comply with the definiteness requirement."). As a result, this claim language is not indefinite.

Further, while "substantially parallel" requires no construction, Baby Jogger's proposed construction mirrors both the plain and ordinary meaning of this claim term as well as the definition expressly outlined in the specification. "When a patentee explicitly defines a claim term in the patent specification, the patentee's definition controls." *Martek Biosciences Corp. v. Nutrinova, Inc.*, 579 F.3d 1363, 1380 (Fed. Cir. 2009); *Vitronics*, 90 F.3d at 1582 ("The specification acts as a dictionary when it expressly defines terms used in the claims or when it defines terms by implication."). Here, the specification expressly provides:

> As used herein, the term "substantially parallel" indicates that the parallel relationship is not a strict relationship and does not exclude functionally similar variations therefrom.

Ex. C, '568 Patent, Ex. D, 3:67-4:3; '231 Patent, 3:52-55. This definition is consistent with the plain and ordinary meaning of this claim term. As discussed above, the claim language describes the relative orientation of components of the stroller, describing them as being "substantially parallel" with respect to each other. For example, claim 1 of the '568 Patent describes "a first front wheel support frame rotatably adjusted to be ***substantially parallel*** with respect to the first upper tube support frame." Ex. C, '568 Patent, 17:27-30.[21] The claims do not require the front wheel support frame to be in a strict parallel relationship with respect to the first upper tube support frame, instead, they must be substantially parallel to each other.

Because this claim language is not indefinite, and because UPPAbaby did not propose a competing construction (ECF 54), there is no dispute concerning the plain and ordinary meaning of this claim term. The claim term "substantially parallel" should be given its plain and ordinary

[21] Claim 1 of the '568 Patent also describes "a second front wheel support frame rotatably adjusted to be ***substantially parallel*** with respect to the second upper tube support frame" and claim 1 of the '231 Patent describes "the front wheel support portion and the handle portion are ***substantially parallel*** when the frame is in the unfolded configuration." '568 Patent, 17:30-34; '231 Patent, 17:23-25.

meaning, which is consistent with the definition provided in the specification for this term: "the parallel relationship is not a strict relationship." Alternatively, consistent with this definition, "substantially parallel" means "approximately parallel."

VII. CONCLUSION

For the foregoing reasons, Baby Jogger respectfully requests that the Court find that the disputed claim terms do not require construction and, where necessary, are not indefinite. Further, to the extent the Court determines that construction would be helpful for a particular disputed claim term, the Court should reject UPPAbaby's unsupported and improper proposed constructions and adopt the plain and ordinary meaning for each term, as proposed by UPPAbaby.

Respectfully submitted,

Dated: March 28, 2025

/s/ Robert J. Leonard
Wendy K. Venoit (BBO No. 568657)
Michael M. Filbin (BBO No. 705341)
COZEN O'CONNOR
200 State Street, Suite 1105
Boston, MA 02109
Telephone: (617) 849-5002
wvenoit@cozen.com
mfilbin@cozen.com

John W. Harbin (Admitted *pro hac vice*)
Georgia State Bar No. 324130
Gregory J. Carlin (Admitted *pro hac vice*)
Georgia State Bar No. 455865
Walter Hill Levie III (Admitted *pro hac vice*)
Georgia State Bar No. 415569
Robert J. Leonard (Admitted *pro hac vice*)
Georgia State Bar No. 303694
MEUNIER CARLIN & CURFMAN LLC
999 Peachtree Street N.E., Suite 1300
Atlanta, Georgia 30309
Telephone: (404) 645-7700
Facsimile: (404) 645-7707
jharbin@mcciplaw.com

gcarlin@mcciplaw.com
tlevie@mcciplaw.com
rleonard@mcciplaw.com

Attorneys for Plaintiff Baby Jogger, LLC

CERTIFICATE OF SERVICE

I certify that on March 28, 2025, I electronically filed the foregoing with the Clerk of the Court using the CM/ECF system, which automatically sends email notification of such filing to registered participants. Any other counsel of record will receive the foregoing via e-mail in PDF format.

/s/ *Robert J. Leonard*
Robert J. Leonard