US 20060071451A1

(19) United States

(12) Patent Application Publication

(10) Pub. No.: US 2006/0071451 A1

(43) Pub. Date: Apr. 6, 2006

Cheng

(54) FOLDING BABY STROLLER

(75) Inventor: **Chih-Ching Cheng**, Yung Kang City (TW)

Correspondence Address:
DAVIS WRIGHT TREMAINE, LLP
2600 CENTURY SQUARE
1501 FOURTH AVENUE
SEATTLE, WA 98101-1688 (US)

(73) Assignee: **Dynamic Brands, LLC**, Richmond, VA

(21) Appl. No.: **11/118,621**

(22) Filed: **Apr. 28, 2005**

Related U.S. Application Data

(60) Provisional application No. 60/567,325, filed on Apr. 30, 2004.

Publication Classification

(51) **Int. Cl.**
B62B 7/00 (2006.01)

(52) **U.S. Cl.** **280/642**

(57) **ABSTRACT**

A baby stroller for transporting a child is disclosed. This baby stroller has a folding mechanism to facilitate folding for easier stowing and transporting. The folding mechanism, a unique feature of the design is directed toward compactness, ease of use, reliability, and reduction in manufacturing costs.

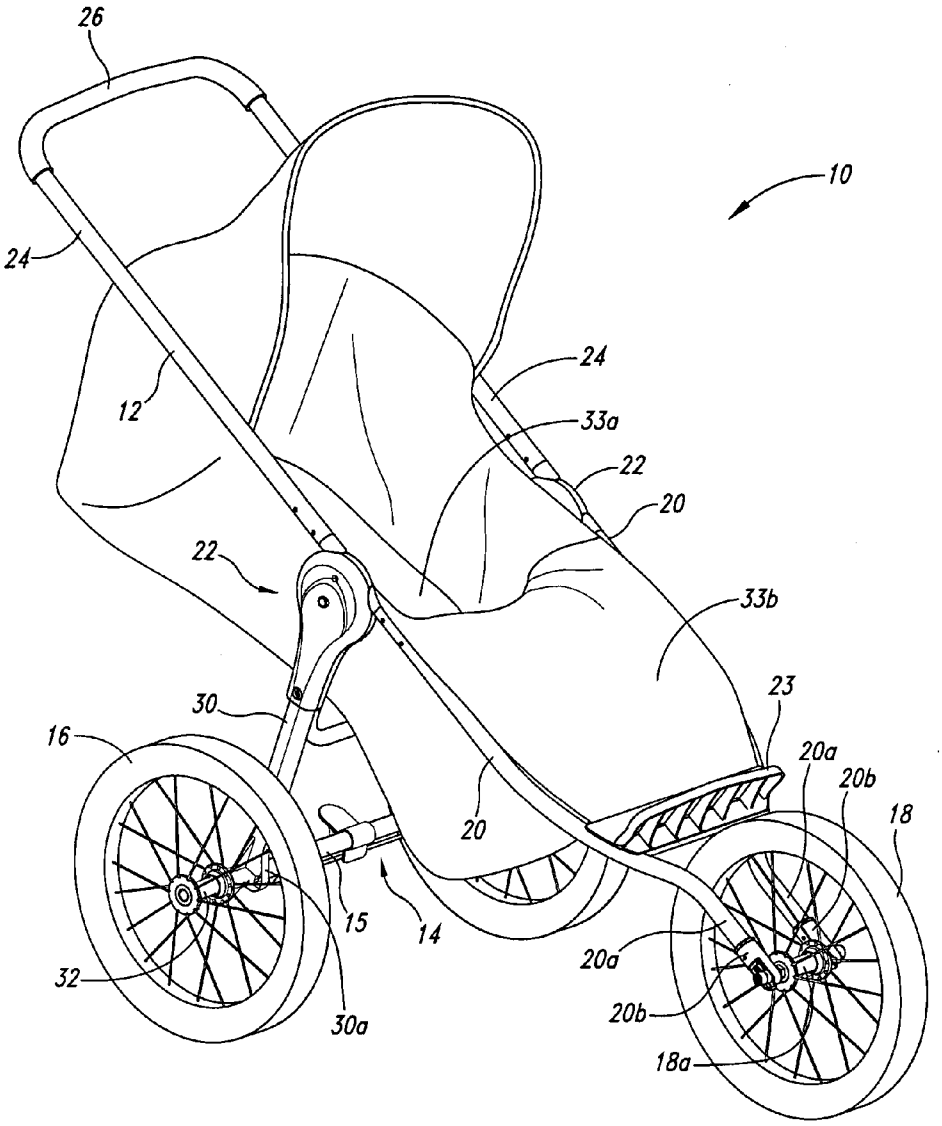

UPPABABY ET AL. EX. 1049

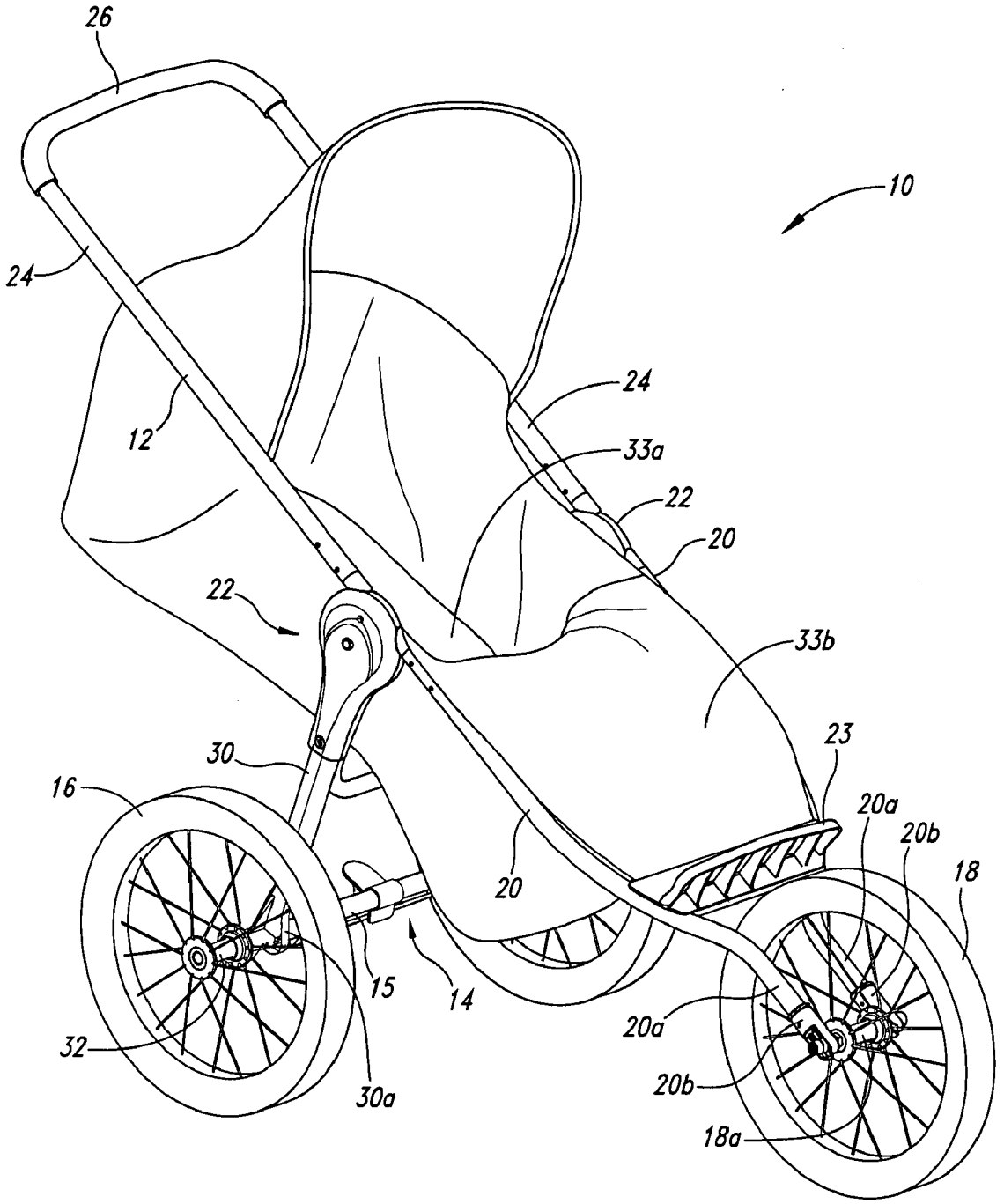
26
10
24
24
12
33a
22
20
22
33b
23
30
16
20a
20b
18
20
15
14
20a
32
20b
30a
18a

Fig. 1

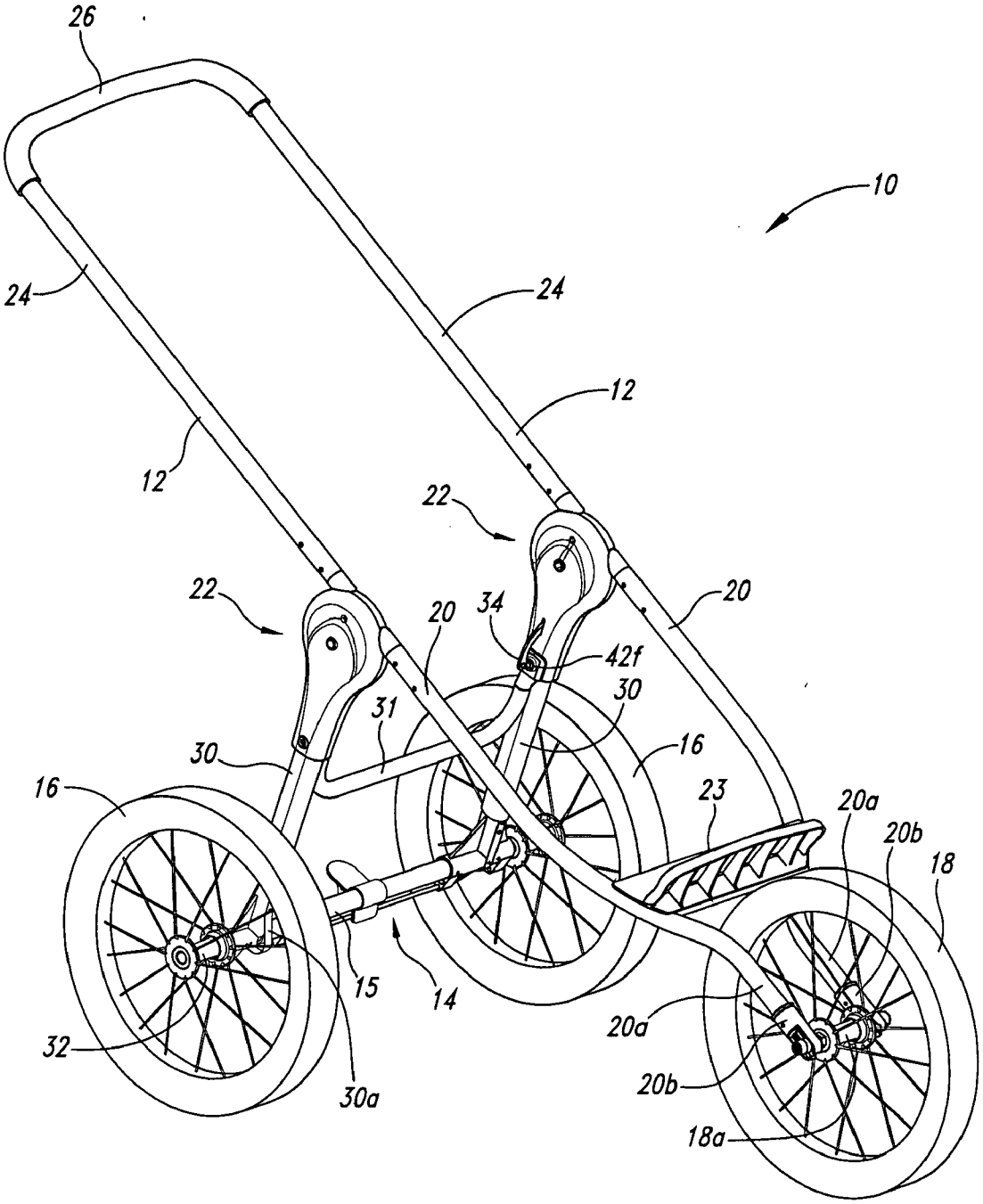
26
10
24
24
12
12
22
22
20
20
34
42f
30
31
30
16
16
23
20a
20b
18
15
14
32
30a
20a
20b
18a

Fig. 2

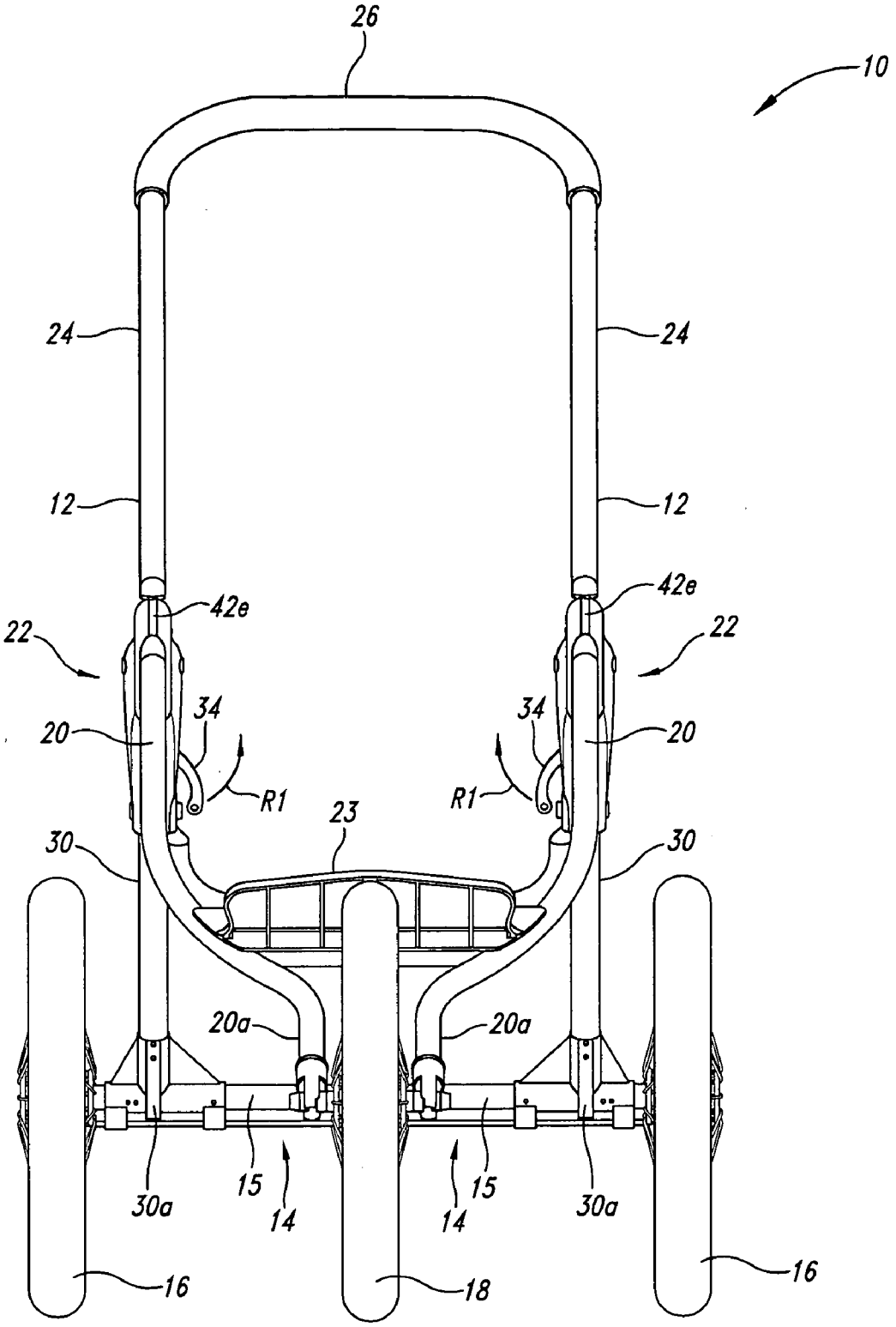
26
10
24
24
12
12
42e
42e
22
22
34
34
20
20
R1
R1
23
30
30
20a
20a
30a
30a
15
15
14
14
16
18
16

Fig. 3

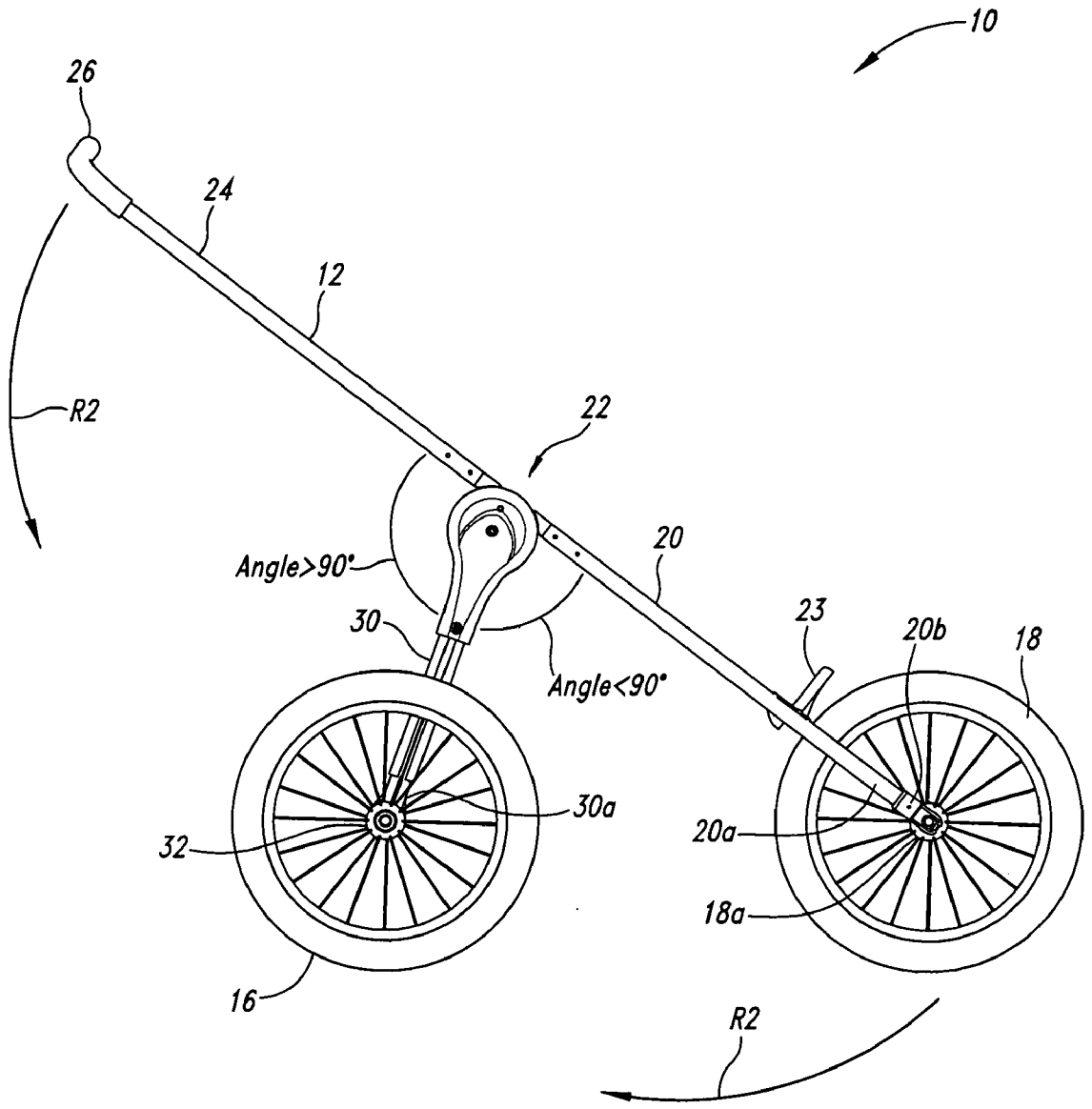
10
26
24
12
R2
22
20
Angle>90°
30
23
20b
18
Angle<90°
30a
32
20a
18a
16
R2

Fig. 4

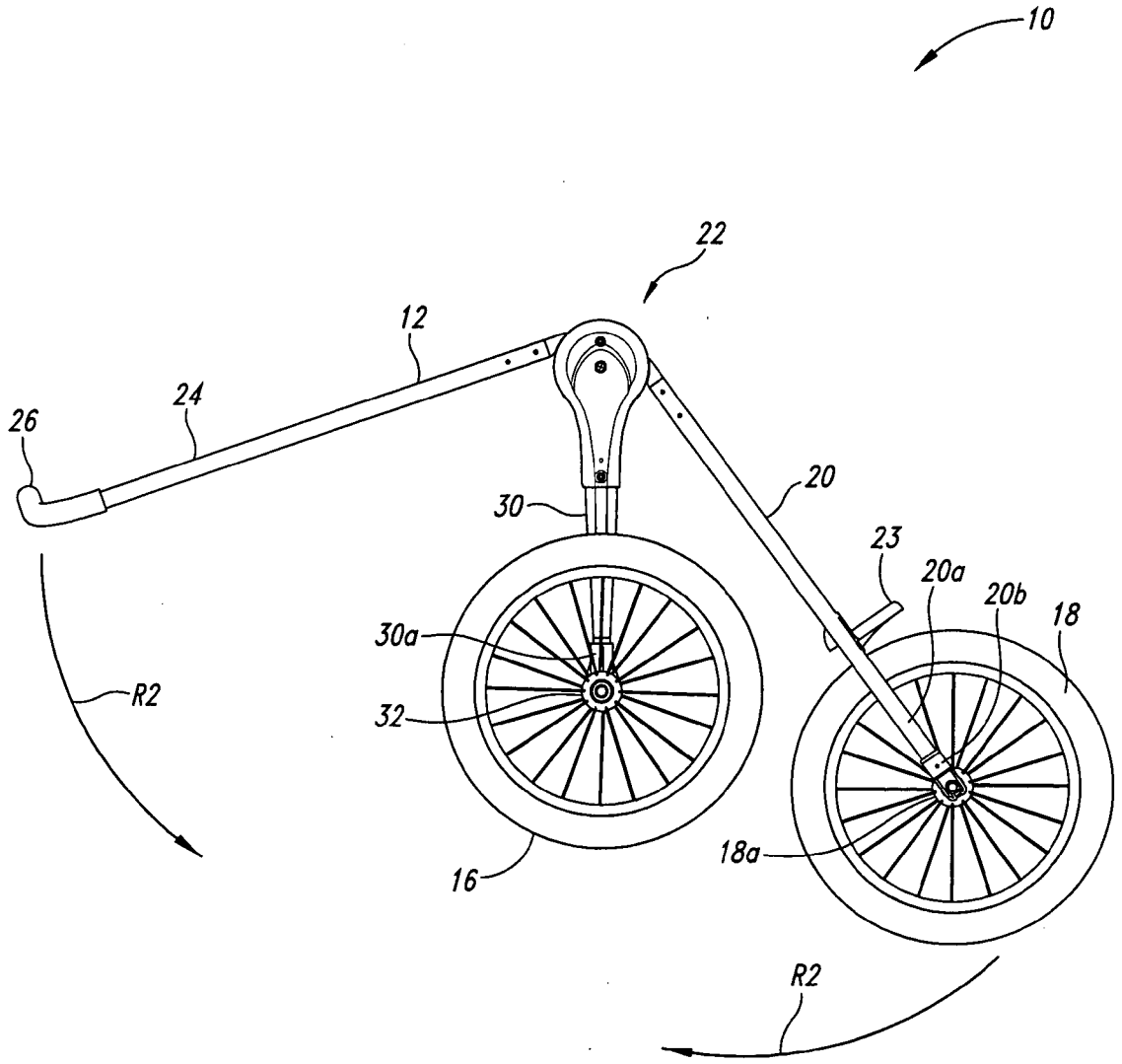

Fig. 5

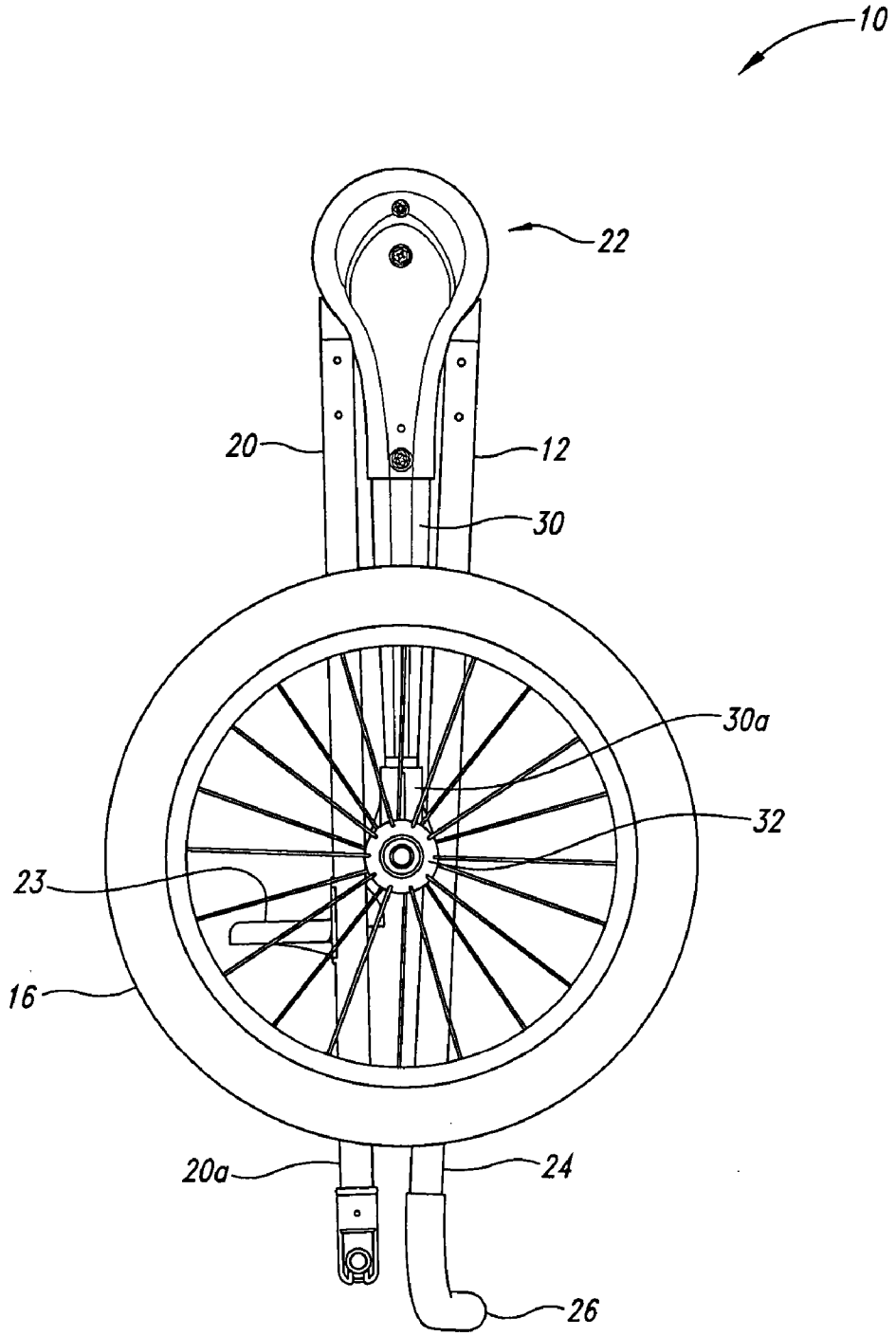

Fig. 6

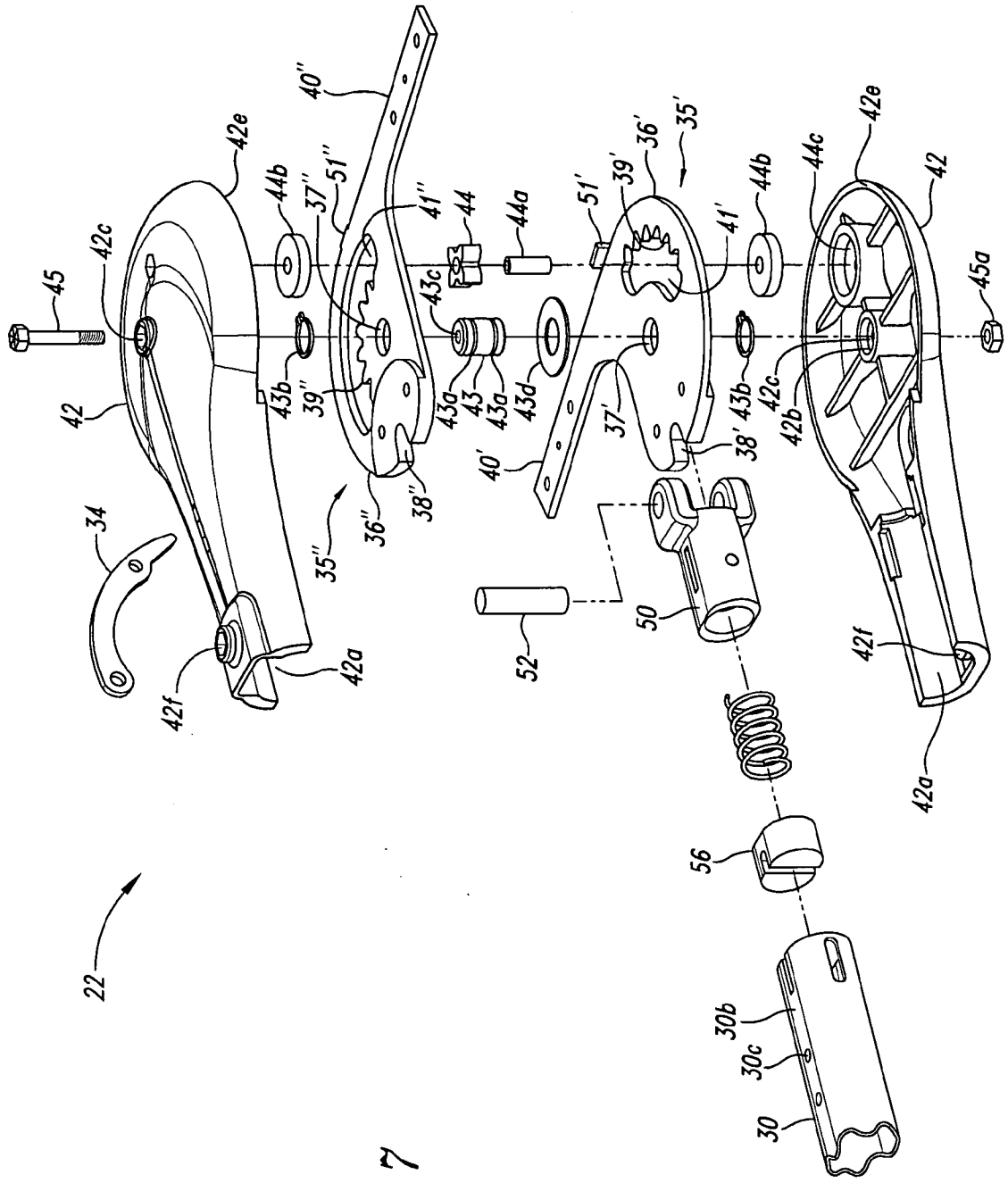
22
34
42
42a
42b
42c
42e
42f
43
43a
43b
43c
43d
44
44a
44b
44c
45
45a
50
51
51'
52
56
30
30b
30c
35
35'
35''
36
36'
36''
37
37'
37''
38
38'
38''
39
39'
39''
40
40'
40''
41
41'
41''

Fig. 7

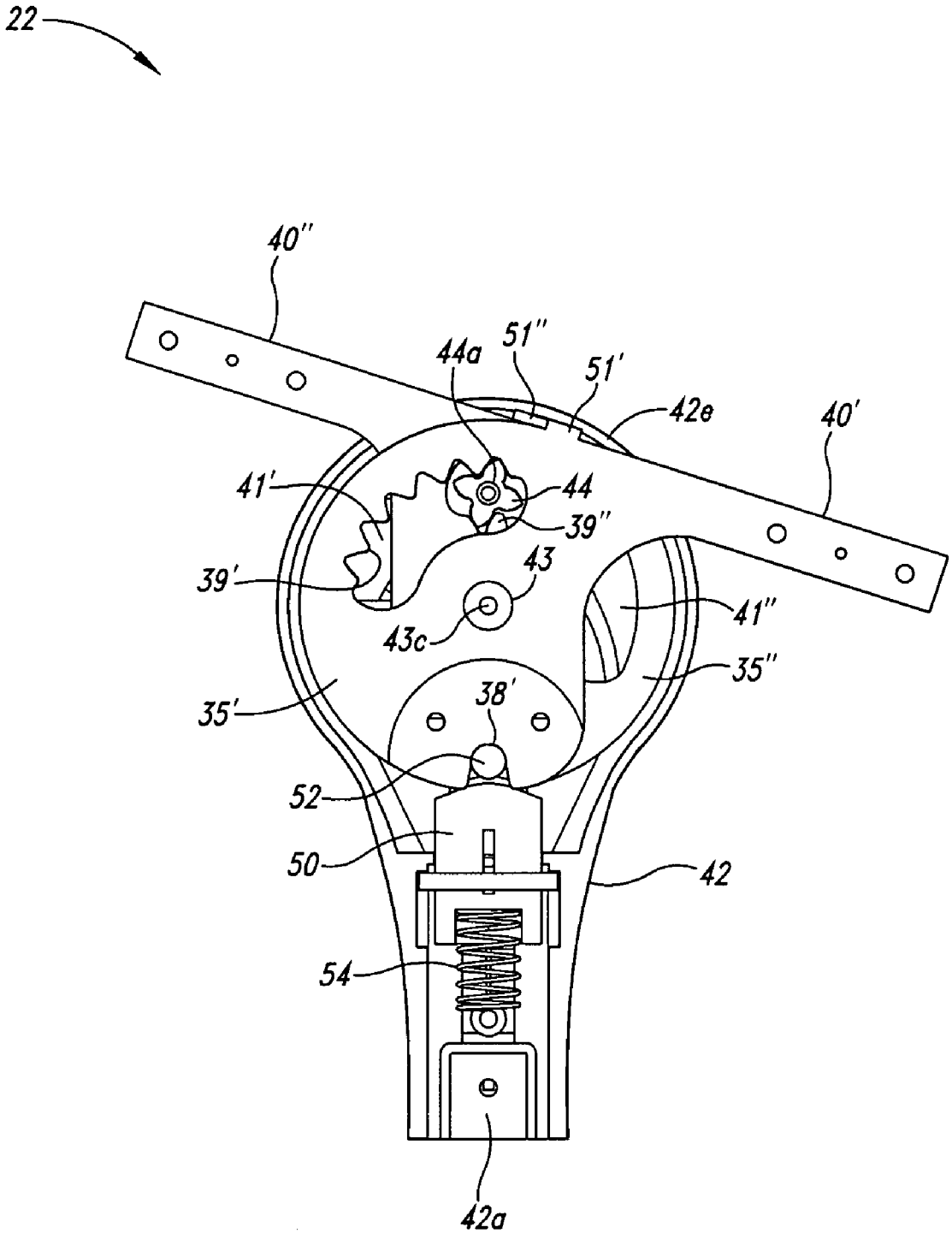

Fig. 8

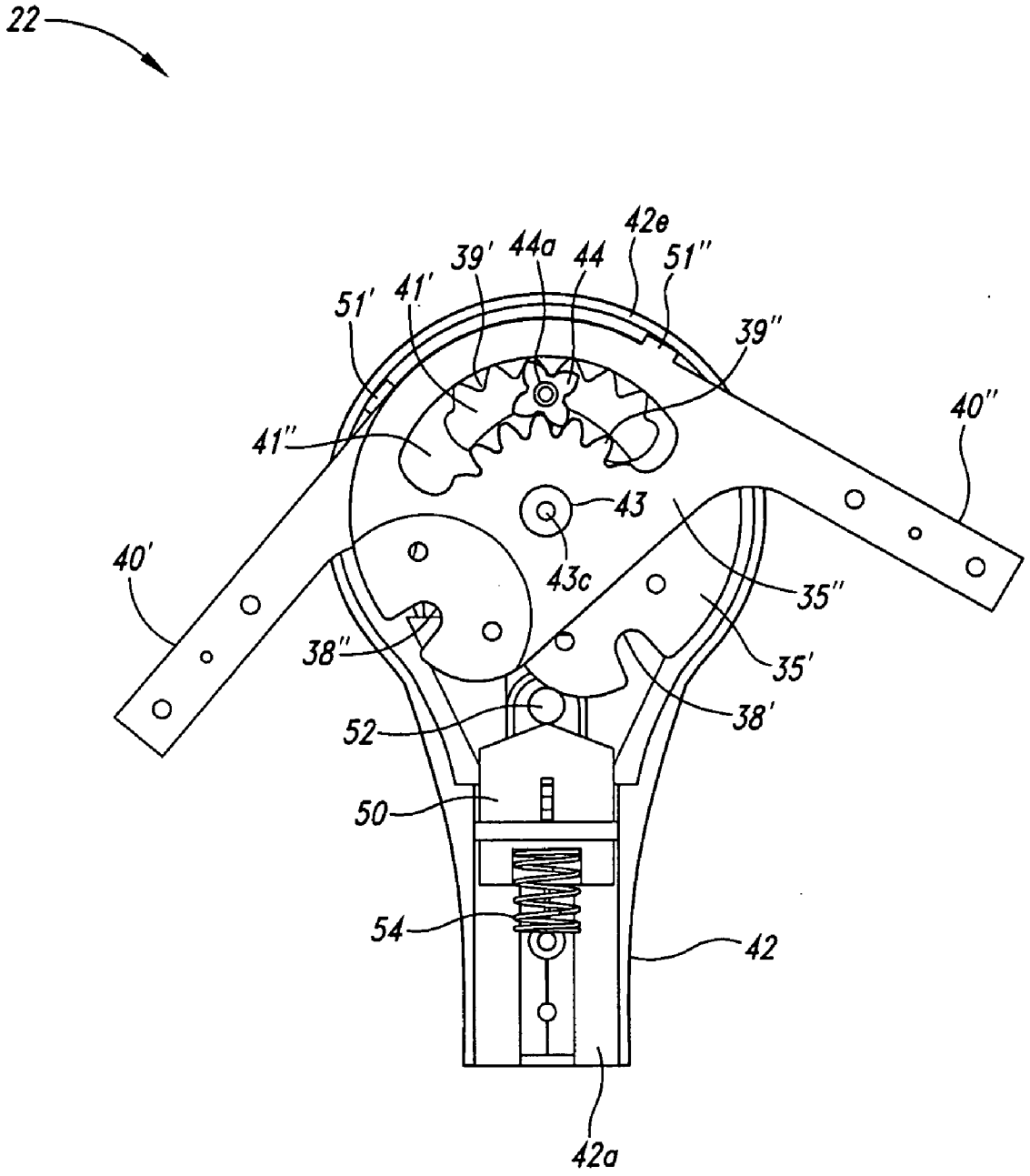
22
42e
39'
44a
44
51''
51'
41'
39''
40''
41''
43
40'
43c
35''
38''
35'
38'
52
50
54
42
42a

Fig. 9

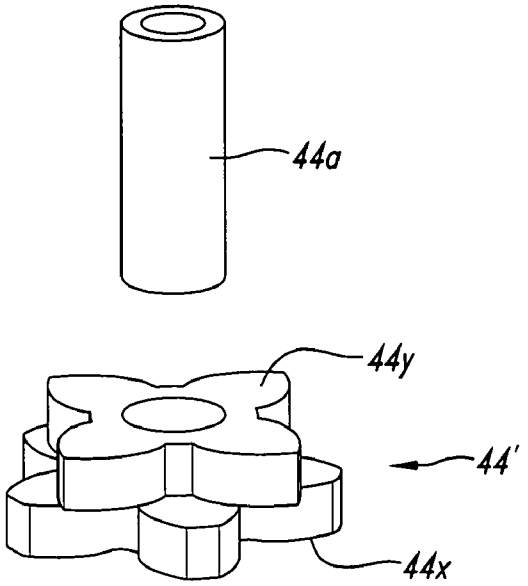

Fig. 10

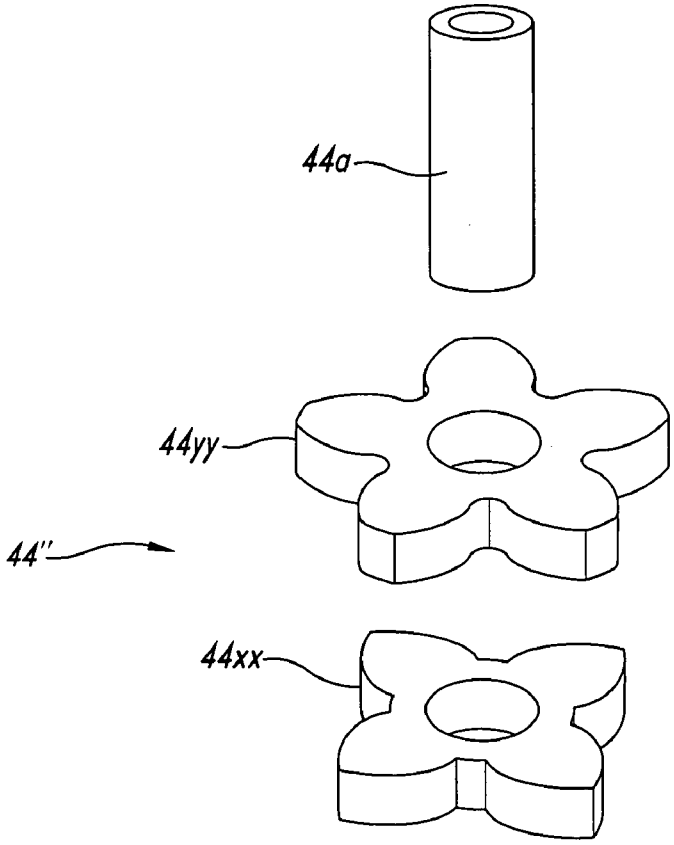

Fig. 11

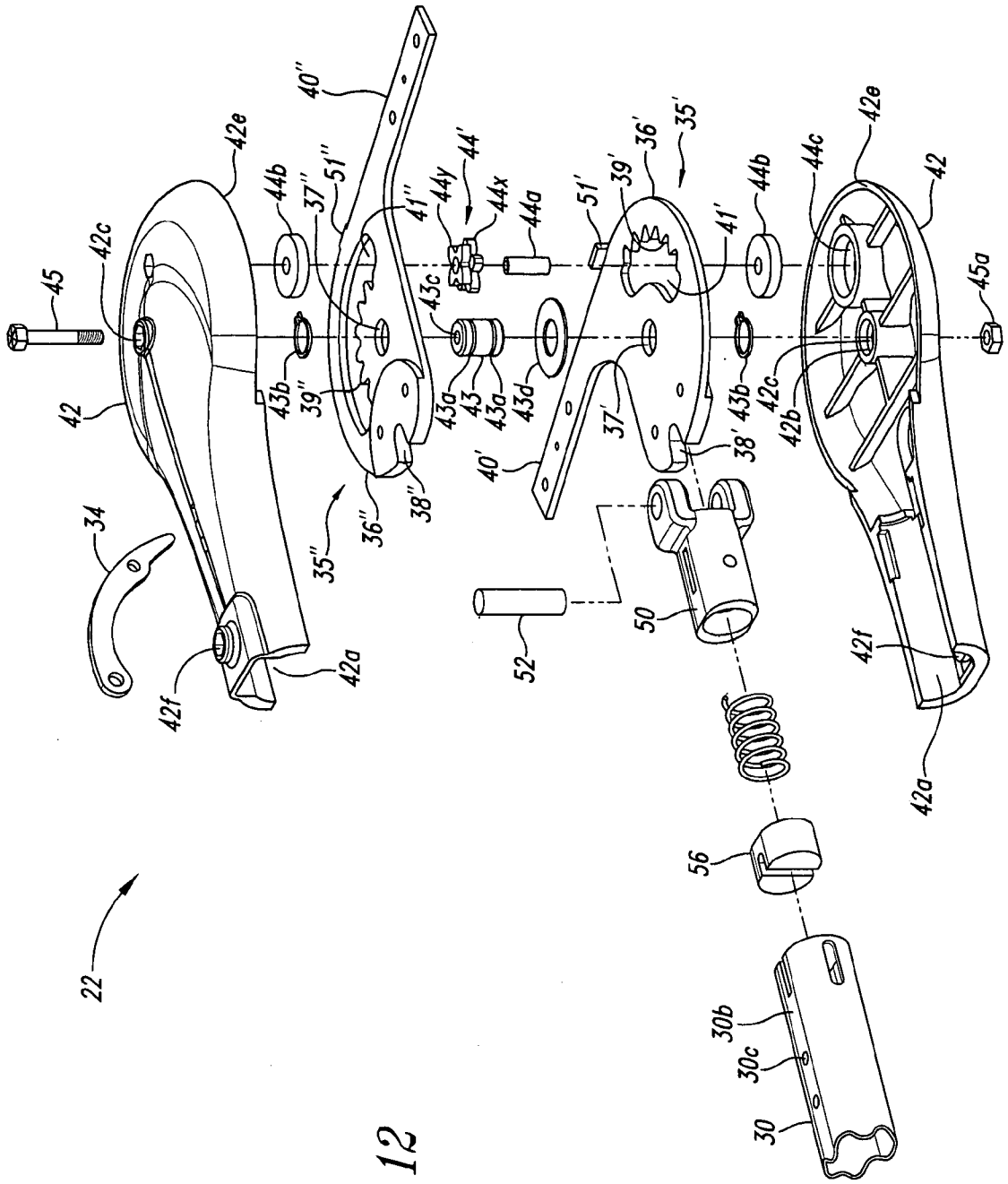
22
34
42
42a
42b
42c
42e
42f
43
43a
43b
43c
43d
44
44a
44b
44c
44x
44y
45
45a
50
51
51'
51''
52
56
30
30b
30c
35
35'
35''
36
36'
36''
37
37'
37''
38'
38''
39
39'
39''
40
40'
40''
41
41'
41''

Fig. 12

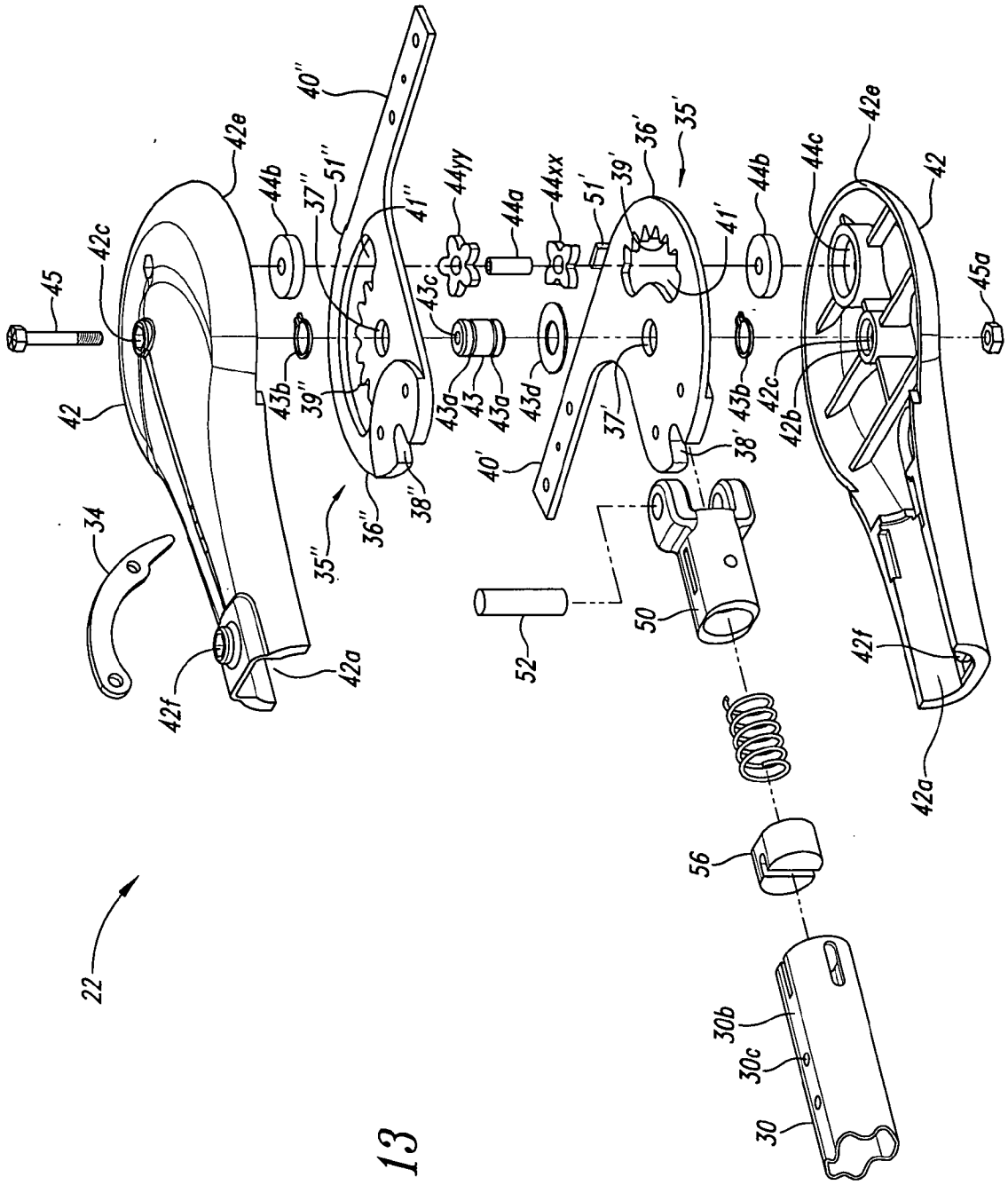
22
30
30b
30c
56
50
52
34
42
42a
42b
42c
42e
42f
43
43a
43b
43c
43d
44a
44b
44c
44xx
44yy
45
45a
35
35'
35''
36
36'
36''
37
37'
37''
38
38'
38''
39
39'
39''
40
40'
40''
41
41'
41''
51
51'
51''

Fig. 13

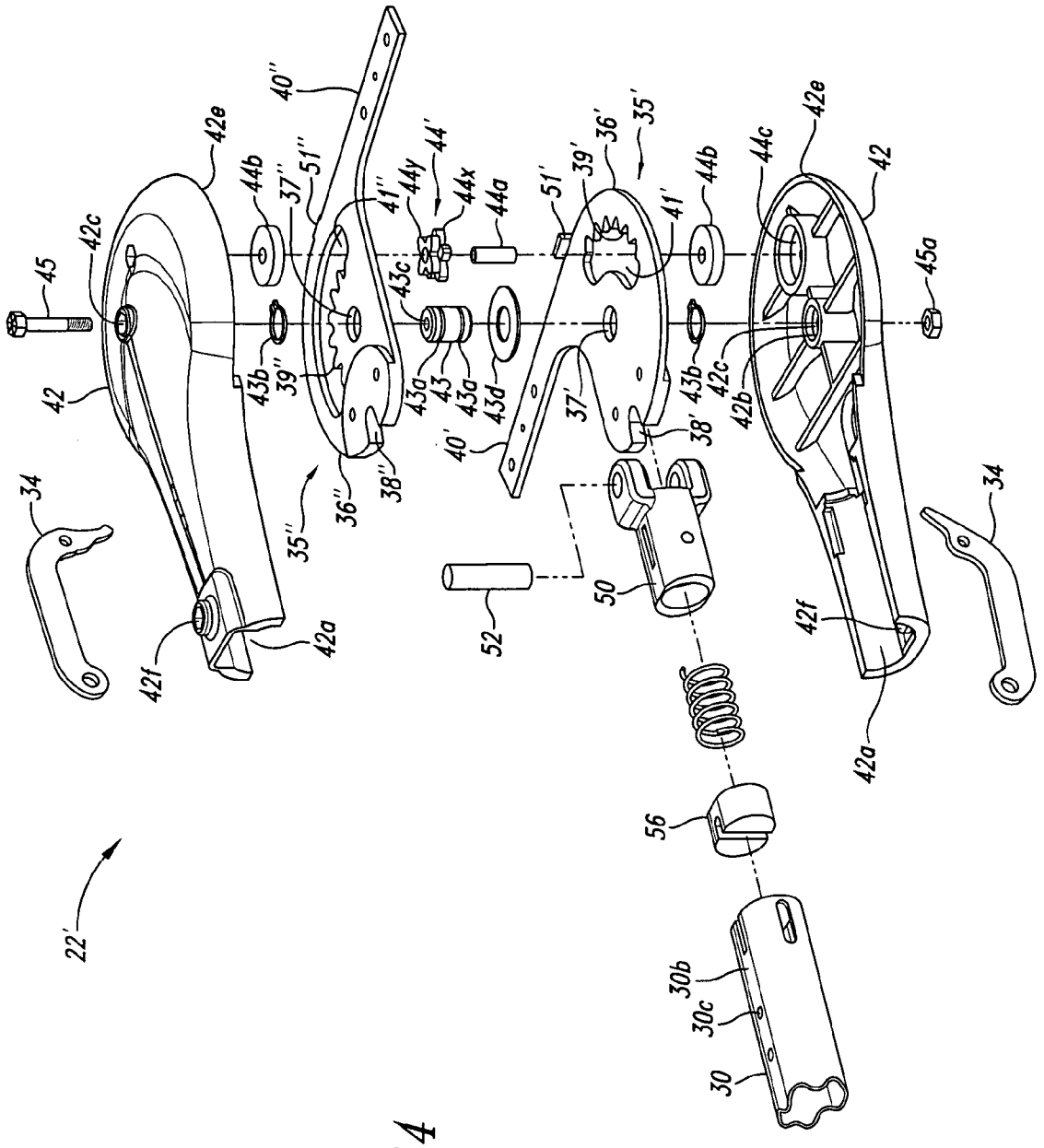
22'
30
30b
30c
56
50
52
34
34
42
42a
42f
42f
42a
42b
42c
42e
42e
42c
45
45a
43
43a
43a
43b
43b
43c
43d
44a
44b
44b
44c
44x
44y
44'
41'
41''
35'
35''
36'
36''
37'
37''
38'
38''
39'
39''
40'
40''
51'
51''

Fig. 14

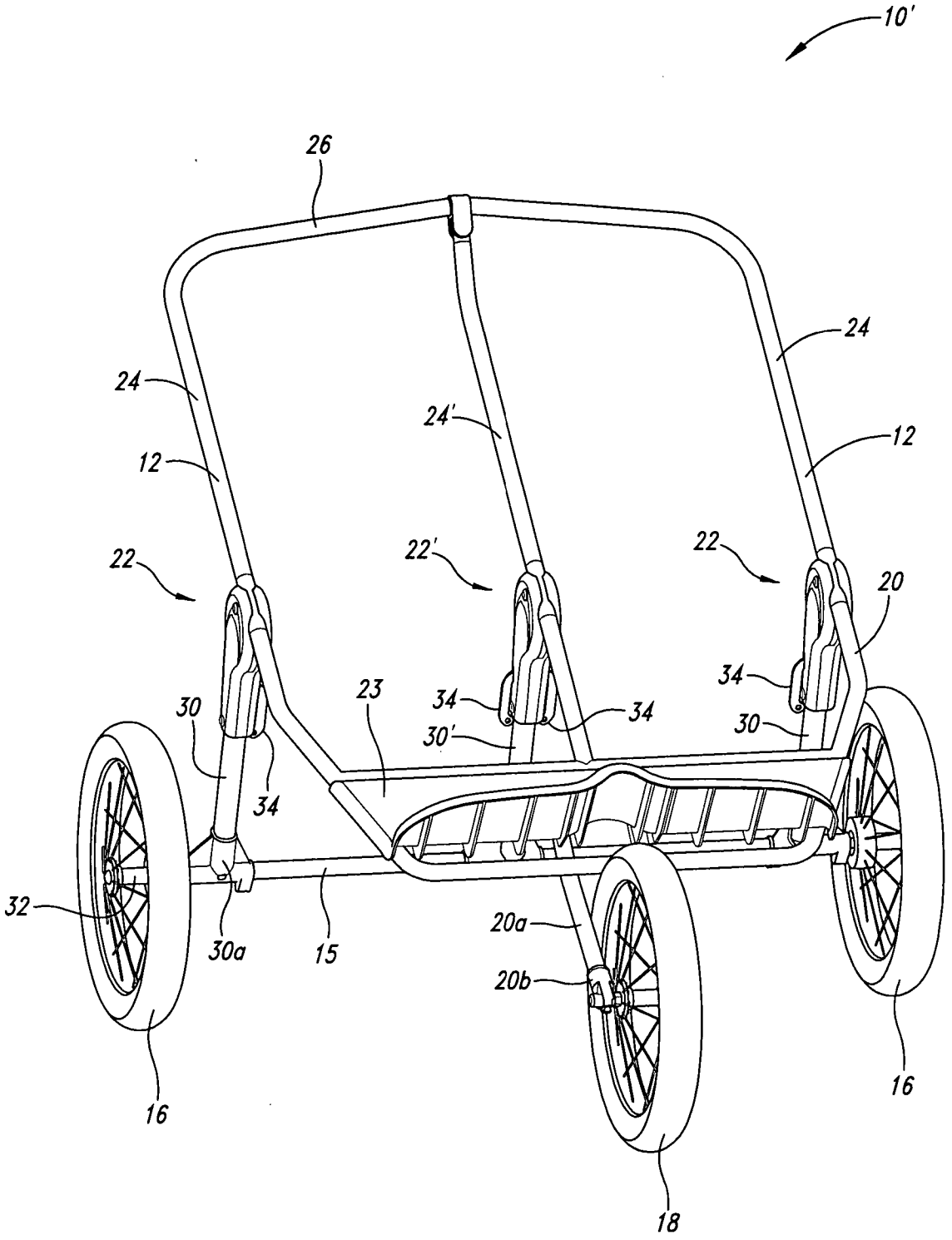
10'
26
24
24
24'
12
12
22
22'
22
20
34
34
34
30
23
30'
30
34
32
30a
15
20a
20b
16
16
18

Fig. 15

FOLDING BABY STROLLER

CROSS REFERENCE TO RELATED APPLICATION(S)

[0001] This application claims the benefit of U.S. Provisional Patent Application No. 60/567,325 filed Apr. 30, 2004, where this provisional application is incorporated herein by reference in its entirety.

BACKGROUND OF THE INVENTION

[0002] 1. Field of the Invention

[0003] The present invention relates to baby strollers, and more particularly, to all-terrain baby strollers that can be folded.

[0004] 2. Description of the Related Art

[0005] Traditionally, baby strollers have been used to push an infant slowly on a relatively hard, smooth floor or sidewalk. As a result, the strollers were made small and light. These strollers work well enough at slow speed, but are extremely unwieldy and even dangerous on rough surfaces or at higher speeds.

[0006] All-terrain baby strollers have been designed to overcome these problems. These strollers typically employ much larger wheels, often large bicycle tires. The stroller frame members are constructed of metal tubular stock and durable plastic frame connectors or other durable material to connect the frame members together to handle the heavy duty use they may receive. The frame connectors are used also to rotate or pivot one frame member relative to another, and are used to removably connect other frame members together.

[0007] Some advanced designs of all-terrain strollers have allowed for a certain degree of folding of the all-terrain baby strollers into less than a desirable amount of compactness. In addition, conventional folding mechanisms include complications that increase cost and reduce reliability and ease of use.

BRIEF SUMMARY OF THE INVENTION

[0008] The present invention resides in a folding baby stroller and a folding mechanism usable with a foldable baby stroller.

[0009] The folding mechanism includes a folding assembly having a first and second rotatable members rotatably mounted to rotate relative to each other. The first rotatable member is positioned for rotation in a first rotation plane and the second roatable member is positioned for rotation in a second rotation plane, the first and second rotation planes being spaced apart. The first rotatable member has a first gear and the second rotatable member has a second gear. The folding assembly further has a third gear and a fourth gear configured to rotate together as a unit. The third gear is positioned in driving engagement with the first gear and the fourth gear is positioned in driving engagement with the second gear so that the first rotatable member and the second rotatable member rotate relative to each other in geared coordination. The first rotatable member is configured for attachment to a first one of first, second and third frame members, the second rotatable member being configured for attachment to a different second one of the first, second and third frame members, and the third and fourth gears configured for support by another different third one of the first, second and third frame members.

[0010] The first gear of the folding mechanism may have a first pitch and second gear a second pitch different than the first pitch, and the third gear may have a third pitch compatible with the first pitch of the first gear and the fourth gear may have a fourth pitch compatible with the second pitch of the second gear.

[0011] In one embodiment of the folding mechanism, the first rotatable member has a first aperture and the first gear is formed in a first edge portion of the first rotatable member defining the first aperture, and the second rotatable member has a second aperture and the second gear is formed in a second edge portion of the second rotatable member defining the second aperture. The third gear is positioned in the first aperture and the fourth gear is positioned in the second aperture. The first and second edge portions may be radially displaced from each other. Further, the first and second rotatable members each may have a face portion with the face portions arranged in face-to-face juxtaposition.

[0012] The first and second rotatable members may be rotatably mounted on a pivot member for rotation about a common axis of rotation, and the third and fourth gears may be coaxially mounted to rotate about an axis parallel to and spaced apart from the common axis of the first and second rotatable members.

[0013] In one embodiment of the folding mechanism the third gear has a first number of gear teeth and fourth gear has a second number of gear teeth different than the first number, and the third gear has a pitch compatible with the pitch of the first gear and the fourth gear has a pitch compatible with the pitch of the second gear.

[0014] The folding assembly may be used as part of a foldable baby stroller frame or other device. The baby stroller typically has a front wheel support, a rear wheel support and a handle member. The folding assembly may include a pivot member, a first rotatable member with a first aperture having a first gear, and a second rotatable member with a second aperture having a second gear. The first and second rotatable members are rotatably coupled to the pivot member to rotate about common axis of rotation. A third gear is positioned in both the first and second apertures in driving engagement with the first gear and the second gear so that the first rotatable member and the second rotatable member rotate relative to each other in geared coordination.

[0015] The first gear may have a first pitch and second gear a second pitch different than the first pitch, and the third gear may include a first gear portion with the first pitch and a second gear portion with the second pitch. The first and second portions of the third gear are configured to rotate as a unit. The first gear portion of the third gear is positioned in the first aperture in driving engagement with the first gear and the second gear portion of the third gear is positioned in the second aperture in driving engagement with the second gear.

[0016] The pivot member is configured to be supportingly engaged by one of the front wheel support, rear wheel support and handle member; the first rotatable member is configured to be attached to a different one of the front wheel support, rear wheel support and handle member; and the

second rotatable member is configured to be attached to another different one of the front wheel support, rear wheel support and handle member.

[0017] The first gear is formed in a first edge portion of the first rotation member defining the first aperture and the second gear is formed in a second edge portion of the second rotation member defining the second aperture. In the depicted implementation the first and second edge portions are radially displaced from each other.

[0018] The first and second apertures may be elongated with the elongated first and second apertures at least in part overlapping. The first gear may have a first pitch diameter, and the second gear a second pitch diameter, with the first pitch diameter and the second pitch diameter not being the same. The first gear may be positioned radially outward of the second gear.

[0019] The depicted implementation has the first pitch diameter of the first gear sized to rotate the one of the front wheel support, rear wheel support and handle member to which the first rotatable member is configured to be attached through a first angle of rotation from a folded position to an unfolded position of the foldable baby stroller frame, and the second pitch diameter for the second gear is sized to rotate the one of the front wheel support, rear wheel support and handle member to which the second rotatable member is configured to be attached through a second angle of rotation from a folded position to an unfolded position of the foldable baby stroller frame, with the first and second angles of rotation not being the same.

[0020] The first rotatable member has an arm configured to be attached to the one of the front wheel support, rear wheel support and handle member to which the first rotatable member is configured to be attached, and the second rotatable member has an arm configured to be attached to the one of the front wheel support, rear wheel support and handle member to which the second rotatable member is configured to be attached.

[0021] The folding assembly may include a movable member, and the first and second rotatable members may each further include a notch to receive the member therein when the first and second rotatable members are rotated about the pivot member to position the notches of the first and second rotatable members in alignment.

[0022] The folding assembly may also include a housing in which the pivot member is positioned. The housing is configured to be attached to the one of the front wheel supports, rear wheel supports and handle members to which the pivot member is configured to be supportingly engaged.

[0023] Other features and advantages of the invention will become apparent from the following detailed description, taken in conjunction with the accompanying drawings.

BRIEF DESCRIPTION OF THE SEVERAL VIEWS OF THE DRAWINGS

[0024] **FIG. 1** is an isometric view of an exemplary implementation of a baby stroller embodying the present invention shown in a fully unfolded state ready for usage.

[0025] **FIG. 2** is an isometric view of the stroller frame of **FIG. 1** without a seat and a leg guard.

[0026] **FIG. 3** is a front elevational view of the stroller frame of **FIG. 2**.

[0027] **FIG. 4** is a side elevational view of the stroller frame of **FIG. 2**.

[0028] **FIG. 5** is a side elevational view of the stroller frame of **FIG. 2** shown in the partially folded state.

[0029] **FIG. 6** is a side elevational view of the stroller frame of **FIG. 2** shown in a fully folded state with both left and right front supports and left and right side handle supports being rotated about their respective side folding assemblies toward respective side rear wheel supports and with the front wheel removed.

[0030] **FIG. 7** is an exploded isometric view of the right side folding assembly of the implementation shown in **FIG. 1**, the left side folding assembly being a mirror image thereof.

[0031] **FIG. 8** is an enlarged, fragmentary, right side elevational view of the right side folding assembly of **FIG. 7** with its outer half housing removed and in the fully unfolded state.

[0032] **FIG. 9** is a fragmentary, left side elevational view of the right side folding assembly of **FIG. 7** with its inner half housing removed and in the partially unfolded state.

[0033] **FIG. 10** is an enlarged isometric view of a pinion gear and pin used in an alternative embodiment of the folding assembly shown in **FIG. 12** where the pinion gear has two gear portions.

[0034] **FIG. 11** is an enlarged isometric view of a pinion gear and pin used in yet another alternative embodiment of the folding assembly shown in **FIG. 13** where the pinion gear is comprised of two gears affixed together for use.

[0035] **FIG. 12** is an exploded isometric view, corresponding to **FIG. 7**, of the right side folding assembly of an alternative embodiment of the folding assembly, the left side folding assembly being a mirror image thereof.

[0036] **FIG. 13** is an exploded isometric view, corresponding to **FIG. 7**, of the right side folding assembly of yet another alternative embodiment of the folding assembly, the left side folding assembly being a mirror image thereof.

[0037] **FIG. 14** is an exploded isometric view, corresponding to **FIG. 7**, of a center folding assembly used in a double baby stroller shown if **FIG. 15** having two release levers.

[0038] **FIG. 15** is an isometric view of an exemplary implementation of a double baby stroller embodying the present invention shown in a fully unfolded state ready for usage but without a seat and a leg guard.

DETAILED DESCRIPTION OF THE INVENTION

[0039] As shown in the drawings for purposes of illustration, the present invention is embodied in an all-terrain baby stroller **10**, as shown in **FIG. 1**, having a foldable, tubular metal frame **12** and a transversely extending rear axle assembly **14** with a transverse, non-rotating tubular rear axle **15**. Left and right side rear wheels **16** are rotatably mounted to the ends of the rear axle assembly **14**. The forward end of the frame **12** has a single front wheel **18** rotatably mounted thereto.

[0040] The frame **12** has no base frame members extending rearwardly from the front wheel **18** to the rear axle assembly **14** as do most conventional all-terrain strollers. Instead, the frame **12** includes left and right side, downwardly and forwardly sloping front wheels frame members or supports **20**, which each extend downward from a corresponding one of left and right side folding assemblies **22** in a converging configuration to the front wheel **18**. A forward free-end **20***a* of each of the left and right side front wheel supports **20** has a plastic front wheel connector **20***b* fixedly attached thereto and a corresponding one of the left and right ends of an axle **18**a of the front wheel **18** removably attached thereto to mount the front wheel to the stroller frame **12**.

[0041] The front wheel supports **20** are interconnected by a foot rest **23** that spans between them toward but rearward of their forward free-ends **20***a* and that is fixedly attached to each at a position rearward of the axle **18***a* of the front wheel and extending partially over the front wheel **18**. As a result of the interconnection provided by the foot rest **23**, and also the front wheel **18** when attached to the left and right side front wheel connectors, the left and right side front wheel supports **20** form a stationary unit with respect to the left and right side folding assemblies **22** upon folding and unfolding of the stroller **10**, as will be described in greater detail below.

[0042] The frame **12** also includes left and right side, upwardly and rearwardly sloping handle frame members or supports **24**, which each extend upward from the corresponding one of the left and right side folding assemblies **22** in a generally parallel configuration to a handle **26** extending between the left and right side handle supports. The handle **26** is covered by a foam grip. The handle supports **24** are interconnected by the handle **26** that spans between them at their rearwardmost and uppermost extension and that is fixedly attached to each.

[0043] As a result of the interconnection provided by the handle **26**, the left and right side handle supports **24** move as a unit with respect to the left and right side folding assemblies **22** upon folding and unfolding of the stroller **10**, as will be described in greater detail below. It is noted that in lieu of the interconnecting handle **26**, the handle supports **24** may each be provided with a handle portion at the upper end thereof such as used with umbrella style strollers.

[0044] In the illustrated embodiment of the invention the left and right side handle supports **24** and the handle **26** are formed as an integral unit by bending a single length of aluminum tube. The left and right side handle supports **24** are movable relative to the left and right side front wheel supports **20** for folding of the stroller **10** and do not together form an integrated rigid upper frame.

[0045] The frame **12** also includes left and right side, downwardly and rearwardly sloping rear wheel frame members or supports **30**, which each extend downward from the corresponding one of the left and right side folding assemblies **22** in a generally parallel configuration to the rear axle assembly **14**. A rearward free-end **30***a* of each of the left and right side rear wheel supports **30** is fixedly attached to the tubular rear axle **15** toward a corresponding one of the left and right ends of the tubular rear axle **15**. The rear wheel supports **30** are interconnected by the rear axle assembly **14** that spans between them at the rearward free-ends **30***a* thereof. A cross-frame member **31** with a U-shape extends between the left and right side rear wheel supports **30**. As a result of the interconnection provided by the rear axle assembly **14** and the cross-frame member **31**, the left and right side rear wheel supports **30** move as a unit with respect to the left and right folding assemblies **22** for folding and unfolding of the stroller **10**, as will be described in greater detail below. The left and right side rear wheel supports **30** are also movable relative to the left and right side front wheel supports **20** and the left and right side handle supports **24** for folding of the stroller **10**. Further, the left and right side rear wheel supports **30** and the rear axle assembly **14** connected thereto do not form a part of a base frame extending between the rear and front wheels **16** and **18**. Much of the structural strength of the stroller **10** and the interconnection of the front wheel supports **20**, the handle supports **24**, and the rear wheel supports **30** are provided by the centrally positioned left and right side folding assemblies **22**, and not by a base frame.

[0046] In the illustrated embodiment of the stroller **10**, the left and right side front wheel supports **20**, the left and right side handle supports **24**, and the left and right side rear wheel supports **30** are made from aluminum tube. Suitable alternative materials may be used.

[0047] The left and right outward ends of the tubular rear axle **15** are open and internally threaded to receive a threaded stub axle **32** forming a part of the corresponding one of the left and right rear wheels **16**. A lock nut (not shown) when tightened against the face of the stub axle **32** locks the stub axle against loosening during usage of the stroller **10**. Alternative constructions may be used to fixedly or removably attach the rear wheels **16** to the tubular rear axle **15**, and any suitable alternative manner of mounting the rear wheels **16** to the real wheel supports **30** may be used.

[0048] The frame **12** of the stroller **10** is shown in **FIG. 1** in the fully unfolded state with a fabric seat **33***a,* and a fabric leg support and guard **33***b*. The seat **33***a* is suspended from the left and right side handle supports **24**, and the leg guard **33***b* spans between and is supported by the left and right side front wheel supports **20**. For purposes of illustration, the frame **12** is shown in **FIG. 2** without the seat **33***a* and the leg guard **33***b*.

[0049] For the depicted implementation, user operation of the left and right side folding assemblies **22** will now be described. The left and right side folding assemblies **22** have the same construction, with one being the mirror image of the other, and the description below, while in the singular, is applicable to both. Each of the left and right rear wheel supports **30** supports an inwardly extending lever **34**, which has a predominantly vertical orientation, as shown in **FIG. 3**, when the frame **12** of the stroller **10** is locked in the fully unfolded position. To begin the procedure to fold the frame **12**, each of the levers **34** is pulled upward and inward as depicted by arrows R**1** to thereby put the left and right side folding assemblies **22** in an unlocked state as further explained below. A strap (not shown) may be connected by its ends to the levers **34** to facilitate movement of both levers at the same time.

[0050] With each of the left and right folding assemblies **22** in an unlocked state, the left and right handle supports **24**, along with the handle **26**, and the left and right front wheel support **20**, along with the front wheel **18**, can be rotated about the left and right folding assemblies, respectively,

toward the left and right rear wheel supports **30**, respectively, as depicted by arrows R**2** shown in **FIG. 4**. As shown, when the stroller **10** is folded, the folding assemblies **22** allow a greater rotation angle for the handle supports **24** (greater than 90°) than for the front wheel supports **20** (less than 90°). As explained further below, the front wheel supports **20** move in geared coordination with movement of the handle supports **24**. As the frame **12** is being folded, the front wheel supports **20** are rotated clockwise about the folding assemblies **22** as viewed in **FIG. 4**, while the handle supports **24** are also rotated counterclockwise about the folding assemblies as viewed in **FIG. 4**. The frame **12** is shown in a partially folded state in **FIG. 5**. In a fully folded state, both the front wheel supports **20** and the handle supports **24** have been rotated in geared coordination with each other about the folding assemblies **22** to be positioned in close proximity to the rear wheel supports **30** as shown in **FIG. 6**. To do so the front wheel **18** is removed.

[**0051**] The right side folding assembly **22** is shown in exploded view in **FIG. 7** and includes a laterally outward positioned forward rotatable member **35'** and a laterally inward rearward rotatable member **35"**, each with a flat face facing toward the other. The forward rotatable member **35'** has a plate or disk **36'** with a central plate portion having a central aperture **37'**. The forward rotatable member **35'** also includes a notch **38'**, a radially outward internal gear **39'** in an elongated aperture **41'**, and an arm **40'**. The rearward rotatable member **35"** has a plate or disk **36"** with a central plate portion having a central aperture **37"**. The rearward rotatable member **35"** also includes a notch **38"**, a radially inward internal gear **39"** in an elongated aperture **41"**, and an arm **40"**. For each of the rotatable members **35'** and **35"**, the disks **36'** and **36"** and the arms **40'** and **40"** are depicted as being formed as part of a single flat plate piece; however, in other implementations the disks and arms are individual pieces that are fixedly attached together.

[**0052**] The rotatable members **35'** and **35"**, along with a corresponding one of the rear wheel supports **30**, are contained between inner and outer slotted halves of a housing **42** that allow the arms **40'** and **40"** to protrude outside of the housing. The inside wall of each half of the housing **42** has a recess **42***a* sized and shaped such that when the two halves of the housing are positioned together, the recesses form a cavity to receive an upper free-end portion **30***b* of the corresponding rear wheel support **30** therein and an upper free-end portion of the cross-frame member **31**. A bolt (not shown) extends through an aperture **42***f* in each half of the housing **42** and through an aperture **30***c* in the upper free-end portion **30***b* of the rear wheel support **30** and an aperture of the upper free-end portion of the cross-frame member **31** to securely clamp the rear wheel support and the cross-frame member between the inner and outer halves of the housing.

[**0053**] The central apertures **37'** and **37"** of the disks **36'** and **36"**, respectively, are sized to receive a bushing **43** therethrough having a length longer than the cumulative thickness of the two disks. The rotatable members **35'** and **35"** are rotatably mounted on the bushing for rotation within the housing **42** in parallel rotation planes about an axis of rotation transverse to the plane of the disks **36'** and **36"**. The end portions of the bushing extending beyond the central apertures **37'** and **37"** each have a circumferential groove **43***a* to receive a C-clip **43***b* to retain the bushing **43** in place. The bushing **43** also extends through a washer **43***d* positioned between the disks **36'** and **36"** of the rotatable members **35'** and **35"** to serve as a spacer and bearing surface for rotational movement of the rotatable members about the bushing **43**. Each of the disks **36'** and **36"** has a flat face in face-to-face juxtaposition with the flat face of the other disk with the washer **43***d* positioned therebetween.

[**0054**] The end portions of the bushing **43** extending beyond the C-clip **43***b* are each positioned in and retained by a retaining cup **42***b* formed by the inside wall of a correspondingly positioned one of the inner and outer halves of the housing **42**. Each of the inner and outer halves of the housing **42** has an aperture **42***c* in communication with the corresponding retaining cups **42***b*. The bushing **43** has a longitudinally extending central aperture **43***c* aligned with apertures **43***b* of inner and outer halves of the housing **42**, and sized to receive a bolt **45** therethrough that extends fully through the inner and outer halves of the housing. A nut **45***a* is threaded onto a threaded end portion of the bolt **45** to clamp the inner and outer halves of the housing **42** of the folding assembly **22** securely together with the disks **36'** and **36"** freely rotatable on the bushing **43** and being spaced apart by the washer **43***d*, and with the arm **40'** extending forwardly through a forward portion of a slot **42***e* in the housing and the arm **40"** extending rearwardly through a rearward portion of the housing slot. The arms **40'** and **40"** are flat elongated plates.

[**0055**] As noted above, the disks **36'** and **36"** of the rotatable members **35'** and **35"** have their flat faces in face-to-face juxtaposition. This provides laterally adjacent parallel plates with elongated apertures **41'** and **41"**, each having the gear teeth of a corresponding one of the radially outward and inward gears **39'** and **39"** formed along an edge portion of the corresponding one of the elongated apertures **41'** and **41"**. The gear teeth of the radially outward gear **39'** of the disk **36'** are formed along the radially outward edge of the elongated aperture **41'**, and the gear teeth of the radially inward gear **39"** of the disk **36"** are formed along the radially inward edge of the elongated aperture **41"**. The planar disks **36'** and **36"** are arranged in spaced apart parallel planes, and the radially outward and inward gears **39'** and **39"** are similarly arranged in spaced apart parallel planes and not in a common plane or in direct engagement with each other. The elongated apertures **41'** and **41"** are positioned on the disks **36'** and **36"** so as to be at least in part overlapping during the rotation of the rotatable members **35'** and **35"** between the folded and unfolded states of the stroller **10**.

[**0056**] A pinion gear **44** is positioned within the elongated apertures **41'** and **41"** in simultaneous geared engagement with both the radially outward gear **39'** of the forward rotatable member **35'** and the radially inward gear **39"** of the rearward rotatable member **35"**. The pinion gear **44** is positioned to extend through and beyond each of the elongated apertures **41'** and **41"** of the disks **36'** and **36"** at a position where the elongated apertures overlap during folding and unfolding of the stroller **10**, and span fully between the radially outward and inward gears **39'** and **39"** of the disks **36'** and **36"** in simultaneous geared engagement with both of the gears. The pinion gear **44** transmits the driving rotational force between the front wheel supports **20** and the handle supports **24** which causes one to rotate in response to rotation of the other.

[**0057**] The pinion gear **44** is rotatably mounted on a pin **44***a* that has each of its end portions extending beyond the

pinion gear **44** positioned in the aperture of a flat bushing **44***b* and rotatably retained by the flat bushing. Each of the flat bushings **44***b* is positioned in and retained by a retaining cup **44***c* formed by the inside wall of a correspondingly positioned one of the inner and outer halves of the housing **42**. As such, the pinion gear **44** is supported by the housing **42**, which is rigidly attached to the corresponding one of the rear wheel supports **30** for movement therewith, of course, being rotatable about the axis of the pin **44***a*. With such arrangement, the pinion gear **44** is rotatable about an axis of rotation transverse to the plane of the disks **36'** and **36"**, and parallel to and spaced apart from the axis of rotation of the disks **36'** and **36"**.

[**0058**] The pinion gear **44** engages both the radially outward gear **39'** of the forward rotatable member **35'** and the radially inward gear **39"** of the rearward rotatable member **35"**. Consequently, through the pinion gear **44**, the radially outward gear **39'** and the radially inward gear **39"** are mutually drivingly engaged with each other so that if either is rotated, the rotational force is transmitted through the pinion gear to the other to cause the other to also rotate about the bushing **43**. As such, if the front wheel supports **20** or the handle supports **24** are rotated relative to the rear wheel supports **30**, the other of the front wheel supports and the handle supports is driven to rotate as well.

[**0059**] The radially outward and inward gears **39'** and **39"** have the same pitch since the pinion gear **44** engages both, but each has a larger pitch diameter than the pinion gear. However, the radially inward gear **39"** have a smaller radius of curvature or pitch diameter than the radially outward gear **39'**, thus the resulting rotational movement of the rearward rotatable member **35"** will be greater than the rotational movement of the forward rotatable member **35'**. In other words, for any amount the pinion gear **44** is rotated, the rearward rotatable member **35"** and hence the handle support **24** attached thereto will rotate more than the forward rotatable member **35"** and hence the front wheel support **20** attached thereto. This is useful since as noted above, and as shown in **FIG. 4**, to fold the front wheel supports **20** and the handle supports **24** tightly about the rear wheel supports **30** requires a greater rotation angle for the handle supports (in one embodiment about 108°) than for the front wheel supports (in that same embodiment about 72°). In another embodiment the rotation angle for the handle supports and the front wheel supports is the same (in the second embodiment about 90° for each).

[**0060**] The pitch diameter for each of the radially outward gear **39'** of the forward rotatable member **35'** and the radially inward gear **39"** of the rearward rotatable member **35"**, and the pitch diameter of the pinion gear **44**, are selected to produce the desired ratio of rotational movement for the forward and rearward rotatable members **35'** and **35"** to fold the stroller **10** into a compact form with the handle supports **24** and the front wheel supports **20** nested tightly against the rear wheel supports **30**. However, while the ability to select different pitch diameters for the radially outward and inward gears **39'** and **39"** is helpful, even a greater degree of design flexibility may be desirable.

[**0061**] In another embodiment of the folding assembly **22** shown in **FIGS. 10 and 12**, a pinion gear **44'** is shown having first and second pinion gear portions **44***x* and **44***y*, with the first pinion gear portion having a first pitch, a first pitch diameter and a first number of gear teeth, and the second pinion gear portion having a different second pitch, a second pitch diameter and a different second number of gear teeth. The first and second pinion gear portions **44***x* and **44***y* are made as a single part and rotate together as a unit in coaxial arrangement on the pin **44***a*, but are essentially two pinion gears, each with its own gear parameters. The first pinion gear portion **44***x* is positioned to engage the radially outward gear **39'** and has a pitch corresponding thereto and five gear teeth, and the second pinion gear portion **44***y* is positioned to engage the radially inward gear **39"** and has a pitch corresponding thereto and four gear teeth. The first and second pinion gear portions **44***x* and **44***y* may have the same or different pitch diameters. In such manner, the radially outward and inward gears **39'** and **39"** and the first and second pinion gear portions **44***x* and **44***y* that engage them, respectively, may be designed with gear parameters to produce a wider range of differing amounts of rotational movement of the forward and rearward rotatable members **35'** and **35"** when folding and unfolding the stroller **10**. In effect, there is more design freedom and flexibility permitted since the radially outward gear **39'** and the first pinion gear portion **44***x* pair can be designed with first gear parameters to produce a first rotational movement of the forward rotatable member **35'**, and the radially inward gear **39"** and the second pinion gear portion **44***y* pair can be designed with different second gear parameters to produce a different second rotational movement of the rearward rotatable member **35"**, with independence in the first and second gear parameters selected.

[**0062**] As noted above, with the first embodiment described only the pitch diameters of the radially outward and inward gears **39'** and **39"** differed, but in the embodiment of **FIGS. 10 and 12**, the radially outward gear **39'** and the first pinion gear portion **44***x* pair and the radially inward gear **39"** and the second pinion gear portion **44***y* pair can be designed essentially independent of the other to produce a desired result, such as a desired ratio of rotational movement of the radially outward gear **39'** and the radially inward gear **39"**, and hence the desired ratio of rotational movement of the forward and rearward rotatable members **35'** and **35"** when folding and unfolding the stroller **10**. For example, this permits design of the folding assemblies **22** with more control over the amount of movement of both the handle supports **24** and the front wheel supports **20** relative to the rear wheel supports **30** resulting during folding of the stroller **10** and hence allows folding into a compact form where the handle supports and the front wheel supports can be moved to nest tightly against the rear wheel supports.

[**0063**] In yet another embodiment of the folding assembly **22** shown in **FIGS. 11 and 13**, a pinion gear **44"** is shown having first and second pinion gears **44***xx* and **44***yy* made as separate parts but fixedly attached together for rotation together as a unit on the pin **44***a*, such as by welding, an insertion pin or some other manner. Alternatively, the first and second pinion gears **44***xx* and **44***yy* may be keyed to the pin **44***a* so long as the pin is free to rotate. The first pinion gear **44***xx* has a first pitch, a first pitch diameter and a first number of gear teeth (shown as five in this embodiment), and the second pinion gear **44***yy* has a different second pitch, a second pitch diameter and a different second number of gear teeth (shown as four in this embodiment). The first pinion gear **44***xx* is positioned to engage the radially outward gear **39'**, and the second pinion gear **44***yy* is positioned to

engage the radially inward gear **39"**. As above, the radially outward gear **39'** and the first pinion gear **44***xx* pair and the radially inward gear **39"** and the second pinion gear **44***yy* pair can be designed with gear parameters essentially independent of the other to providing greater flexibility in designing the folding assemblies **22** to produce a desired ratio of rotational movement of the radially outward gear **39'** and the radially inward gear **39"**, and hence the desired ratio of rotational movement of the forward and rearward rotatable members **35'** and **35"** when folding and unfolding the stroller **10**.

[**0064**] The length of the radially outward gear **39'** of the forward rotatable member **35'** and the radially inward gear **39"** of the rearward rotatable member **35"**, and also the length of the elongated apertures **41'** and **41"** within which the pinion gear **44** is positioned, impact the amount of rotation possible for the forward and rearward rotatable members **35'** and **35"**. The range of movement is limited by stops **51'** and **51"** attached to the perimeter portion of the forward and rearward rotatable members **35'** and **35"**, respectively. Each of the stops **51'** and **51"** extends laterally toward the adjacent rotatable member and radially outward of the perimeter of the adjacent rotatable member. The stops **51'** and **51"** are attached to the rotatable members **35'** and **35"** at positions along the perimeter of the rotatable member to which attached such that when the rotatable members are rotated to place the folding assemblies **22** in the fully unfolded state, as shown in **FIG. 8**, the stops **51'** and **51"** are in engagement and prevent further rotational movement of the rotatable members in that rotational direction. In the depicted implementation, the stops **51'** and **51"** are positioned to allow a rotation angle for the handle supports **24** of about **1080** and for the front wheel supports **20** of about 70°.

[**0065**] It should be understood that while in the depicted implementation the front wheel supports **20** and the handle supports **24** are attached to the rotatable members **35'** and **35"** of the left and right side folding assemblies **22** (and the rear wheel supports **30** fixedly attached to the housing **42**), other implementations may have the rear wheel supports **30** and the handle supports **24** attached to the rotatable members **35'** and **35"** of the folding assemblies **22** (and the front wheel supports **20** fixedly attached to the housing **42**) such that they rotate to fold about the front wheel supports. Similarly, the rear wheel supports **30** and the front wheel supports **20** may be attached to the rotatable members **35'** and **35"** of the folding assemblies **22** (and the handle supports **24** fixedly attached to the housing **42**) such that they rotate to fold about the handle supports.

[**0066**] To prevent the unintended folding of the stroller **10** when the folding assemblies **22** are in a fully unfolded state, as shown in **FIG. 8**, each folding assembly has a releasable locking mechanism with a slidably mounted head **50** having a locking lug **52**. A spring **54** applies a bias force to the head **50** to maintain the locking lug **52** in contact with a smooth, rounded perimeter portion of each of the disks **36'** and **36"** of the folding assembly as the rotatable members are rotated close to the stroller fully unfolded state. The notches **38'** and **38"** of the disks **36'** and **36"** are positioned along a reinforced perimeter portion of the disks in a location where when the stroller **10** reaches the fully unfolded state, the notches are in alignment and the spring **54** will drive the head **50** forward to position the locking lug **52** in both notches, and hence prevent rotation of the disks toward the folded state. The portion of the disks **36'** and **36"** around the notches **38'** and **38"** has increased thickness for added strength.

[**0067**] The head **50** is slidably mounted in the housing **42** at a position above the recess **42***a* receiving the upper free-end portion **30***b* of the rear wheel support **30**. The upper end of the spring **54** engages the head **50** and the lower end engages a spring support **56** positioned inside the upper free-end portion **30***b* of the rear wheel support **30**. The lever **34** for the folding assembly **22** is pivotally mounted to the rear wheel support **30** and has a nose portion extending through an aperture in the head **50** and in engagement with a pin within the head so that when the lever **34** is pulled upward and inward as depicted by the arrows R**1** in **FIG. 3**, the head **50** is moved downward, away from the disks **36'** and **36"**, thereby causing the locking lug **52** to be retracted from the notches **38'** and **38"** and permitting the disks **36'** and **36"** to rotate toward the fully folded state shown in **FIG. 6** in a generally clam shell movement to position the handle supports **24** and the front wheel supports **20** nested tightly against the rear wheel supports **30**. The folding assembly **22** is shown in **FIG. 9** between the unfolded and folded states with the locking lug **52** of the head **50** retracted from the notch **38'** and **38"**.

[**0068**] While the spring **54** supplies enough force to the head **50** to keep the locking lug **52** in the notches **38'** and **38"** to lock the stroller **10** in the fully unfolded state, the force is not so great as to require undue force to be applied to the lever **34** by the user to retract locking lug from the notches when the folding assembly is to be folded.

[**0069**] Each of the left and right side folding assemblies **22** has the corresponding left or right front wheel support **20** bolted onto the arm **40'** of the forward rotatable member **35'** and the corresponding left or right handle support **24** bolted onto the arm **40"** of the rearward rotatable member **35"**.

[**0070**] It should be understood that while the rotatable members **35'** and **35"** were depicted as including the disks **36'** and **36"**, in other implementations the rotatable members **35'** and **35"** may have other shapes.

[**0071**] Another embodiment of an all-terrain baby stroller **10'** is shown in **FIG. 15**. This embodiment has the basic same design as the stroller **10**, but is designed to carry two children is side by side arrangement. The frame **12** of the stroller **10'**, in addition to having the left and right side frame supports **24**, has a center frame support **24'** which extends upward from a center folding assembly **22'** (shown in **FIG. 14**) of the same construction as the previously described folding assemblies **22**, except the center folding assembly **22'** has left and right side outwardly extending levers **34**. Either of the levers for the center folding assembly **22'** may be pulled upward and outward to place the center folding assembly **22'** in an unlocked state. Much as with the folding assembly **22** described above, each lever **34** for the center folding assembly **22'** is pivotally mounted to a rear wheel support **30'** and has a nose portion extending through an aperture in the head **50** of the center folding assembly **22'**, although from opposite sides thereof. Movement of either lever **34** when pulled upward and outward causes the head **50** of the center folding assembly **22'** to moved downward, away from the disks **36'** and **36"** of the center folding assembly **22'**, thereby causing the locking lug **52** to be retracted from the notches **38'** and **38"** and permitting the disks **36'** and **36"** to rotate toward the fully folded state. A

strap (not shown) may be connected by its ends to the lever **34** of the left side folding assembly **22** and to the left side lever **34** of the center folding assembly **22'**, and another strap (not shown) may be connected by its ends to the lever **34** of the right side folding assembly **22** and to the right side lever **34** of the center folding assembly **22'** to facilitate movement of both levers to which the strap is connected at the same time.

[**0072**] From the foregoing it will be appreciated that, although specific embodiments of the invention have been described herein for purposes of illustration, various modifications may be made without deviating from the spirit and scope of the invention. Accordingly, the invention is not limited except as by the appended claims.

The invention claimed is:

1. A foldable baby stroller, comprising:

a front wheel;

left and right side laterally spaced-apart front wheel supports, each of the left and right side front wheel supports having a forward end portion and a rearward end portion, the front wheel being mounted to the forward end portion of at least one of the front wheel supports, the left and right side front wheel supports being rotatable as a unit;

left and right rear wheels;

left and right side laterally spaced-apart rear wheel supports, each of the left and right side rear wheel supports having a lower end portion and an upper end portion, the lower end portions being coupled to at least one of the left and right rear wheels;

left and right side laterally spaced-apart handle members, each of the left and right side handle members having a forward end portion and a rearward end portion with a handle portion, the left and right side handle members being rotatable as a unit; and

left and right side laterally spaced-apart folding assemblies, each of the left and right side folding assemblies having a first rotatable member and second rotatable member rotatably coupled to a pivot member supported by the upper end portion of a corresponding one of the left and right side rear wheel supports for rotation about a common axis of rotation, the first rotatable member having a first elongated aperture with a first gear and the second rotatable member having a second elongated aperture with a second gear, each of the left and right side folding assemblies further having a third gear positioned in both the first and second elongated apertures in driving engagement with the first gear and the second gear so that the first rotatable member and the second rotatable member rotate relative to each other in geared coordination, the rearward end portion of a corresponding one of the left and right side front wheel supports being attached to the first rotatable member, and the forward end portion of a corresponding one of the left and right side handle members being attached to the second rotatable member.

2. The foldable baby stroller of claim 1 wherein the first gear is formed in a radially outward edge portion of the first rotatable member defining the first aperture and the second gear is formed in a radially inward edge portion of the second rotatable member defining the second aperture of each the left and right side folding assemblies.

3. The foldable baby stroller of claim 1 wherein the front wheel supports rotate through a first angle of rotation from a folded position to an unfolded position of the foldable baby stroller and the handle members rotate through a second angle of rotation from the folded position to the unfolded position of the foldable baby stroller, with the first and second angles of rotation not being the same, and wherein the first gear of each of the left and right side folding assemblies has a first pitch diameter and the second gear of each of the left and right side folding assemblies has a second pitch diameter, with the first pitch diameter and the second pitch diameter not being the same, the first pitch diameter being sized in relation to the second pitch diameter to allow for rotation of the front wheel supports through the first angle of rotation while the handle members rotate through the second angle of rotation.

4. The folding baby stroller claim 1 wherein the first gear has a first pitch and second gear has a second pitch different than the first pitch, and wherein the third gear includes a first gear portion with the first pitch and a second gear portion with the second pitch, the first and second portions of the third gear configured to rotate as a unit, and the first gear portion of the third gear is positioned in the first elongated aperture in driving engagement with the first gear and the second gear portion of the third gear is positioned in the second elongated aperture in driving engagement with the second gear.

5. The folding baby stroller claim 1 wherein the first gear has a first pitch and second gear has a second pitch the same as the first pitch, and wherein the third gear includes a first gear portion with the first pitch and a second gear portion with the second pitch, the first and second portions of the third gear rotating as a unit, and the first gear portion of the third gear is positioned in the first elongated aperture in driving engagement with the first gear and the second gear portion of the third gear is positioned in the second elongated aperture in driving engagement with the second gear.

6. A foldable baby stroller frame for use with at least one front wheel and rear wheels, comprising:

left and right side laterally spaced-apart front wheel supports, each of the left and right side front wheel supports having an end portion, the front wheel supports being configured for mounting of the at least one front wheel thereto, the left and right side front wheel supports being rotatable as a unit;

left and right side laterally spaced-apart rear wheel supports, each of the left and right side rear wheel supports having an end portion, the rear wheel supports each being configured for mounting of at least one rear wheel thereto, the left and right side rear wheel supports being rotatable as a unit;

left and right side laterally spaced-apart handle members, each of the left and right side handle members having an end portion, the handle members each having a handle portion, the left and right side handle members being rotatable as a unit; and

left and right side laterally spaced-apart folding assemblies, each of the left and right side folding assemblies having a first rotatable member and a second rotatable member rotatably coupled to a pivot member, the first

rotatable member having a first aperture with a first gear and the second rotatable member having a second aperture with a second gear, each of the left and right side folding assemblies further having a third gear positioned in both the first and second apertures in driving engagement with the first gear and the second gear so that the first rotatable member and the second rotatable member rotate relative to each other in geared coordination, the pivot member being supported by the end portion of one of the front wheel supports, rear wheel supports and handle members of a corresponding side for rotation of the first and second members about a common axis of rotation, the end portion of a different one of the front wheel support, rear wheel support and handle member of a corresponding side being attached to the first rotatable member, and the end portion of yet a different one of the front wheel support, rear wheel support and handle member of a corresponding side being attached to the second rotatable member.

7. The foldable baby stroller frame of claim 6 wherein the first gear is formed in a first edge portion of the first rotatable member defining the first aperture and the second gear is formed in a second edge portion of the second rotatable member defining the second aperture of each the left and right side folding assemblies.

8. The foldable baby stroller frame of claim 7 wherein the first and second edge portions are radially displaced from each other.

9. The foldable baby stroller frame of claim 8 wherein the first aperture is elongated and the second aperture is elongated, and wherein the elongated first and second apertures at least in part overlap.

10. The foldable baby stroller frame of claim 8 wherein the first gear has a first pitch diameter and the second gear has a second pitch diameter, with the first pitch diameter and the second pitch diameter not being the same.

11. The foldable baby stroller frame of claim 10 wherein the first pitch diameter of the first gear is sized to rotate the one of the front wheel support, rear wheel support and handle member attached to the first rotatable member through a first angle of rotation from a folded position to an unfolded position of the foldable baby stroller frame, and wherein the second pitch diameter for the second gear is sized to rotate the one of the front wheel support, rear wheel support and handle member attached to the second rotatable member through a second angle of rotation from a folded position to an unfolded position of the foldable baby stroller frame, with the first and second angles of rotation not being the same.

12. The folding baby stroller claim 6 wherein the first gear has a first pitch and second gear has a second pitch different than the first pitch, and wherein the third gear includes a first gear portion with the first pitch and a second gear portion with the second pitch, the first and second portions of the third gear rotating as a unit, and the first gear portion of the third gear is positioned in the first aperture in driving engagement with the first gear and the second gear portion of the third gear is positioned in the second aperture in driving engagement with the second gear.

13. A folding assembly for a baby stroller frame having a front wheel support, a rear wheel support and a handle member, comprising:

a pivot member;

a first rotatable member with a first aperture having a first gear;

a second rotatable member with a second aperture having a second gear, the first and second rotatable members being rotatably coupled to the pivot member to rotate about common axis of rotation; and

a third gear positioned in both the first and second apertures in driving engagement with the first gear and the second gear so that the first rotatable member and the second rotatable member rotate relative to each other in geared coordination, the pivot member being configured to be supportingly engaged by one of the front wheel support, rear wheel support and handle member, the first rotatable member being configured to be attached to a different one of the front wheel support, rear wheel support and handle member, and the second rotatable member being configured to be attached to yet another different one of the front wheel support, rear wheel support and handle member.

14. The folding assembly of claim 13 wherein the first gear is formed in a first edge portion of the first rotatable member defining the first aperture and the second gear is formed in a second edge portion of the second rotatable member defining the second aperture.

15. The folding assembly of claim 14 wherein the first and second edge portions are radially displaced from each other.

16. The folding assembly of claim 14 wherein the first aperture is elongated and the second aperture is elongated, and wherein the elongated first and second apertures at least in part overlap.

17. The folding assembly of claim 16 wherein the first gear has a first pitch diameter and the second gear has a second pitch diameter, with the first pitch diameter and the second pitch diameter not being the same.

18. The folding assembly of claim 17 wherein the first pitch diameter of the first gear is sized to rotate the one of the front wheel support, rear wheel support and handle member to which the first rotatable member is configured to be attached through a first angle of rotation from a folded position to an unfolded position of the foldable baby stroller frame, and wherein the second pitch diameter for the second gear is sized to rotate the one of the front wheel support, rear wheel support and handle member to which the second rotatable member is configured to be attached through a second angle of rotation from a folded position to an unfolded position of the foldable baby stroller frame, with the first and second angles of rotation not being the same.

19. The folding baby stroller claim 13 wherein the first gear has a first pitch and the second gear has a second pitch different than the first pitch, and wherein the third gear includes a first gear portion with the first pitch and a second gear portion with the second pitch, the first and second portions of the third gear rotating as a unit, and the first gear portion of the third gear is positioned in the first elongated aperture in driving engagement with the first gear and the second gear portion of the third gear is positioned in the second elongated aperture in driving engagement with the second gear.

20. The folding baby stroller claim 13 wherein the first gear has a first pitch and the second gear has a second pitch different than the first pitch, and wherein the third gear includes a first gear portion with the first pitch and a second

gear portion with the second pitch, the first and second portions of the third gear rotating as a unit, and the first gear portion of the third gear is positioned in the first aperture in driving engagement with the first gear and the second gear portion of the third gear is positioned in the second aperture in driving engagement with the second gear.

21. A foldable baby stroller frame for use with at least one front wheel and at least one rear wheel, comprising:

left and right side laterally spaced-apart first members, each of the first members having a first end portion and a second end portion;

left and right side laterally spaced-apart second members, each of the second members having a first end portion and a second end portion;

left and right side laterally spaced-apart third members, each of the third members having a first end portion and a second end portion, at least one of the first end portions of the first members having a mounting portion configured for mounting of the at least one front wheel thereto, at least one of the first end portions of the second members having a mounting portion configured for mounting of the at least one rear wheel thereto, and at least one of the first end portions of the third members having a handle portion; and

left and right side laterally spaced-apart folding assemblies, each of the left and right side folding assemblies having a first rotatable plate and a second rotatable plate rotatably mounted on a pivot member to pivot about a common axis in parallel planes, the first rotatable plate having a first aperture with a first gear and the second rotatable plate having a second aperture with a second gear, each of the left and right side folding assemblies further having a third gear positioned in both the first and second apertures in driving engagement with the first gear and the second gear so that the first rotatable plate and the second rotatable plate rotate relative to each other in geared coordination, one of the second end portions of a first one of the first, second and third members being attached to the first rotatable plate, one of the second end portions of a different second one of the first, second and third members being attached to the second rotatable plate, and one of the second end portions of another different third one of the first, second and third members supporting the pivot member.

22. The foldable baby stroller frame of claim 21 wherein the first gear is formed at a first edge portion of the first rotatable plate defining the first aperture and the second gear is formed at a second edge portion of the second rotatable plate defining the second aperture of each the left and right side folding assemblies.

23. The foldable baby stroller frame of claim 22 wherein the first and second rotatable plates each have a central portion with the central portions arranged in face-to-face juxtaposition.

24. The foldable baby stroller frame of claim 22 wherein the first and second edge portions are radially displaced from each other.

25. The foldable baby stroller frame of claim 21 wherein the first and second rotatable plates each have a planar arm portion projecting therefrom and in coplanar relation therewith, the one of the second end portions attached to the first rotatable plate being attached to the arm portion thereof and the one of the second end portions attached to the second rotatable plate being attached to the arm thereof.

26. The foldable baby stroller frame of claim 21 wherein the first gear has a first pitch diameter and the second gear has a second pitch diameter, with the first pitch diameter and the second pitch diameter not being the same.

27. The foldable baby stroller frame of claim 26 wherein the first pitch diameter of the first gear is sized to rotate the one of the first, second and third members attached to the first rotatable plate through a first angle of rotation from a folded position to an unfolded position of the foldable baby stroller frame, and wherein the second pitch diameter for the second gear is sized to rotate the one of the first, second and third members attached to the second rotatable plate through a second angle of rotation from a folded position to an unfolded position of the foldable baby stroller frame, with the first and second angles of rotation not being the same.

28. The foldable baby stroller frame claim 21 wherein the first and second rotatable plates are rotatably mounted to rotate about the common axis through spaced apart parallel rotation planes with the common axis transverse to the first and second rotatable plates, and the third gear is rotatably mounted to rotate about an axis transverse to the rotation planes of the first and second rotatable plates and spaced apart from the common axis of the first and second rotatable plates.

29. The foldable baby stroller frame of claim 28 wherein the first and second rotatable plates each have a planar arm portion projecting therefrom and in coplanar relation therewith and rotatable with the first and second rotatable plates through the respective spaced apart parallel rotation planes of the first and second rotatable plates, the one of the second end portions attached to the first rotatable plate being attached to the arm portion thereof and the one of the second end portions attached to the second rotatable plate being attached to the arm thereof.

30. The foldable baby stroller frame claim 21 wherein the third gear is rotatably mounted to rotate about an axis parallel to and spaced apart from the common axis of the first and second rotatable plates.

31. The foldable baby stroller frame claim 30 wherein the first and second rotatable plates are rotatably mounted to rotate about the common axis with the first and second gears being in parallel rotation planes.

32. The foldable baby stroller frame of claim 30 wherein the first gear is formed at a first edge portion of the first rotatable plate defining the first aperture and the second gear is formed at a second edge portion of the second rotatable plate defining the second aperture of each the left and right side folding assemblies, with the first edge being radially outward of the axis of the third gear and the second edge being radially inward of the axis of the third gear.

33. The folding baby stroller claim 21 wherein the first gear has a first pitch and second gear has a second pitch different than the first pitch, and wherein the third gear includes a first gear portion with the first pitch and a second gear portion with the second pitch, the first and second portions of the third gear rotating as a unit, and the first gear portion of the third gear is positioned in the first aperture in driving engagement with the first gear and the second gear portion of the third gear is positioned in the second aperture in driving engagement with the second gear.

34. A folding mechanism usable with a foldable device having first, second and third frame members, the folding mechanism comprising:

a folding assembly having a first and second rotatable members rotatably mounted to rotate relative to each other, the first rotatable member being positioned for rotation in a first rotation plane and the second roatable member being positioned for rotation in a second rotation plane spaced apart from the first rotation plane, the first rotatable member having a first gear portion and the second rotatable member having a second gear portion, the folding assembly further having a third gear extending between the spaced apart first and second rotation planes and positioned in driving engagement with both the first and second gear portions so that the first rotatable member and the second rotatable member rotate relative to each other in geared coordination, the first rotatable member being configured for attachment to a first one of the first, second and third frame members, the second rotatable member being configured for attachment to a different second one of the first, second and third frame members, and the third gear configured for support by another different third one of the first, second and third frame members.

35. The folding mechanism of claim 34 wherein the first rotatable member has a first aperture and the first gear portion is formed at a first edge portion of the first rotatable member defining the first aperture, and the second rotatable member has a second aperture and the second gear portion is formed at a second edge portion of the second rotatable member defining the second aperture, and wherein the third gear is positioned in both the first and second apertures.

36. The folding mechanism of claim 35 wherein the first and second rotatable members each have a face portion with the face portions arranged in face-to-face juxtaposition.

37. The folding mechanism of claim 35 wherein the first and second edge portions are radially displaced from each other.

38. The folding mechanism of claim 34 wherein the first rotatable member has a first aperture with the first gear portion and the second rotatable member has a second aperture with the second gear portion, and the first aperture is elongated and the second aperture is elongated, and wherein the elongated first and second apertures at least in part overlap and the third gear is positioned in an overlapping portion of both the first and second apertures.

39. The folding mechanism of claim 38 wherein the first gear portion is formed in a first edge portion of the first rotatable member defining the first aperture and the second gear portion is formed in a second edge portion of the second rotatable member defining the second aperture.

40. The folding mechanism of claim 39 wherein the first and second edge portions are radially displaced from each other.

41. The folding mechanism of claim 40 wherein the first edge portion is positioned at an elongated outward edge of the first aperture and the second edge portion is positioned at an elongated inward edge of the second aperture.

42. The folding mechanism of claim 34 wherein the first gear portion has a first pitch diameter and the second gear portion has a second pitch diameter, with the first pitch diameter and the second pitch diameter not being the same.

43. The folding mechanism of claim 42 for use with a foldable device movable between a folded position and an unfolded position, wherein the first pitch diameter of the first gear portion is sized to rotate the one of the first, second and third frame members when attached to the first rotatable member through a first angle of rotation from the folded position to the unfolded position of the foldable device frame, and wherein the second pitch diameter for the second gear portion is sized to rotate the one of the first, second and third frame members when attached to the second rotatable member through a second angle of rotation from the folded position to the unfolded position of the foldable device frame, with the first and second angles of rotation not being the same.

44. The folding mechanism of claim 34 wherein the first and second rotatable members are positioned for rotation in parallel first and second rotation planes, and the first and second rotatable members are rotatably mounted on a pivot member for symmetric rotation about a common axis of rotation through the spaced apart parallel first and second rotation planes with the common axis transverse to the first and second rotatable members, and the third gear is rotatably mounted to rotate about an axis transverse to the first and second rotation planes of the first and second rotatable members and outwardly spaced apart from the common axis of the first and second rotatable members.

45. The folding mechanism of claim 44 wherein the first and second rotatable members are first and second rotatable plates, respectively.

46. The folding mechanism of claim 45 wherein the first and second rotatable plates each have a planar arm portion projecting therefrom and in coplanar relation therewith and rotatable with the first and second rotatable plates through the respective spaced apart parallel rotation planes of the first and second rotatable plates, the arm portion of the first rotatable plate being configured for attachment to the first one of the first, second and third frame members and the arm portion of the second rotatable plate being configured for attachment to the different second one of the first, second and third frame members.

47. The folding mechanism of claim 34 wherein the first and second rotatable members are rotatably mounted on a pivot member for rotation about a common axis of rotation and the third gear is rotatably mounted to rotate about an axis parallel to and spaced apart from the common axis of the first and second rotatable members.

48. The folding mechanism claim 47 wherein the first and second rotatable members are rotatably mounted to rotate about the common axis with the first and second gear portions being in parallel rotation planes.

49. The folding mechanism of claim 47 wherein the first gear portion is formed at a first edge portion of the first rotatable member defining in part a first aperture of the first rotatable member and the second gear portion is formed at a second edge portion of the second rotatable member defining in part a second aperture of the second rotatable member, with the first edge being radially outward of the axis of the third gear and the second edge being radially inward of the axis of the third gear.

50. The folding mechanism of claim 34 wherein the first gear portion has a first pitch and second gear portion has a second pitch different than the first pitch, and wherein the third gear includes a third gear portion with the first pitch and a fourth gear portion with the second pitch, the third and

fourth gear portions of the third gear rotating as a unit, and the third gear portion of the third gear is positioned in the first aperture in driving engagement with the first gear portion and the fourth gear portion of the third gear is positioned in the second aperture in driving engagement with the second gear portion.

51. The folding mechanism of claim 50 wherein the third gear portion of the third gear is a first pinion gear and the fourth gear portion of the third gear is second pinion gear, the first and second pinion gears being in coaxially arrangement.

52. The folding mechanism of claim 51 wherein the first and second pinion gear are a single part.

53. The folding mechanism of claim 51 wherein the first and second pinion gears are two parts configured to rotate as a unit.

54. A folding mechanism usable with a foldable device having first, second and third frame members, the folding mechanism comprising:

a folding assembly having a first and second rotatable members rotatably mounted to rotate relative to each other, the first rotatable member being positioned for rotation in a first rotation plane and the second roatable member being positioned for rotation in a second rotation plane spaced apart from the first rotation plane, the first rotatable member having a first gear and the second rotatable member having a second gear, the folding assembly further having a third gear and a fourth gear configured to rotate together as a unit, the third gear being positioned in driving engagement with the first gear and the fourth gear being positioned in driving engagement with the second gear so that the first rotatable member and the second rotatable member rotate relative to each other in geared coordination, the first rotatable member being configured for attachment to a first one of the first, second and third frame members, the second rotatable member being configured for attachment to a different second one of the first, second and third frame members, and the third and fourth gears configured for support by another different third one of the first, second and third frame members.

55. The folding mechanism of claim 54 wherein the first gear has a first pitch and second gear has a second pitch different than the first pitch, and wherein the third gear has a third pitch compatible with the first pitch of the first gear and the fourth gear has a fourth pitch compatible with the second pitch of the second gear.

56. The folding mechanism of claim 55 wherein the first rotatable member has a first aperture and the first gear is formed at a first edge portion of the first rotatable member defining the first aperture, and the second rotatable member has a second aperture and the second gear is formed at a second edge portion of the second rotatable member defining the second aperture, and wherein the third gear is positioned in the first aperture and the fourth gear is positioned in the second aperture.

57. The folding mechanism of claim 56 wherein the first and second edge portions are radially displaced from each other.

58. The folding mechanism of claim 54 wherein the first and second rotatable members each have a face portion with the face portions arranged in face-to-face juxtaposition.

59. The folding mechanism of claim 54 wherein the first and second rotatable members are rotatably mounted on a pivot member for rotation about a common axis of rotation, and the third and fourth gears is coaxially mounted to rotate about an axis parallel to and spaced apart from the common axis of the first and second rotatable members.

60. The folding mechanism of claim 54 wherein the third gear has a first number of gear teeth and fourth gear has a second number of gear teeth different than the first number, and wherein the third gear has a pitch compatible with the pitch of the first gear and the fourth gear has a pitch compatible with the pitch of the second gear.

61. A folding assembly for a baby stroller frame having a front wheel support, a rear wheel support and a handle member, comprising:

a pivot member;

a first rotatable member having a first aperture and a first gear located at the first aperture;

a second rotatable member having a second gear, the first and second rotatable members being rotatably coupled to the pivot member to rotate about common axis of rotation in spaced apart first and second rotation planes, respectively; and

a third gear positioned in driving engagement with the first gear and the second gear so that the first rotatable member and the second rotatable member rotate relative to each other in geared coordination, the pivot member being configured to be supportingly engaged by one of the front wheel support, rear wheel support and handle member, the first rotatable member being configured to be attached to a different one of the front wheel support, rear wheel support and handle member, and the second rotatable member being configured to be attached to yet another different one of the front wheel support, rear wheel support and handle member.

62. The folding assembly of claim 61 wherein the first and second gears are radially displaced from each other with the third gear positioned therebetween.

63. The folding baby stroller claim 61 wherein the first gear has a first pitch and second gear has a second pitch different than the first pitch, and wherein the third gear includes a first gear portion with the first pitch and a second gear portion with the second pitch, the first and second portions of the third gear rotating as a unit.

* * * * *