03-18-03

10390549 .031403

jc759 U.S. PTO
03/14/03

J1036 U.S. PTO
10/390549
03/14/03

Practitioner's Docket No. 944-001.105 ***PATENT***

Preliminary Classification:

Proposed Class:

Subclass:

NOTE: "All applicants are requested to include a preliminary classification on newly filed patent applications. The preliminary classification, preferably class and subclass designations, should be identified in the upper right-hand corner of the letter of transmittal accompanying the application papers, for example 'Proposed Class 2, subclass 129.'" M.P.E.P. § 601, 7th ed.

IN THE UNITED STATES PATENT AND TRADEMARK OFFICE

Box Patent Application
Assistant Commissioner for Patents
Washington, D.C. 20231

NEW APPLICATION TRANSMITTAL

Transmitted herewith for filing is the patent application of

Inventor(s): Jani LAINEMA

WARNING: *37 C.F.R.§ 1.41(a)(1) points out:*

"(a) A patent is applied for in the name or names of the actual inventor or inventors.

"(1) The inventorship of a nonprovisional application is that inventorship set forth in the oath or declaration as prescribed by § 1.63, except as provided for in § 1.53(d)(4) and § 1.63(d). If an oath or declaration as prescribed by § 1.63 is not filed during the pendency of a nonprovisional application, the inventorship is that inventorship set forth in the application papers filed pursuant to § 1.53(b), unless a petition under this paragraph accompanied by the fee set forth in § 1.17(l) is filed supplying or changing the name or names of the inventor or inventors."

For (title): METHOD FOR CODING MOTION IN A VIDEO SEQUENCE

CERTIFICATION UNDER 37 C.F.R. § 1.10*

*(Express Mail label number is **mandatory**)*
(Express Mail certification is optional.)

I hereby certify that this New Application Transmittal and the documents referred to as attached therein are being deposited with the United States Postal Service on this date March 14, 2003, in an envelope as "Express Mail Post Office to Addressee," mailing Label Number EV 137072745 US, addressed to the: Commissioner for Patents, Washington, D.C. 20231.

Jennifer A. Hanlon
(type or print name of person mailing paper)

Jennifer A Hanlon
Signature of person mailing paper

WARNING: *Certificate of mailing (first class) or facsimile transmission procedures of 37 C.F.R. § 1.8 cannot be used to obtain a date of mailing or transmission for this correspondence.*

WARNING: *Each paper or fee filed by "Express Mail" **must** have the number of the "Express Mail" mailing label placed thereon prior to mailing. 37 C.F.R. § 1.10(b).*
*Since the filing of correspondence under § 1.10 without the Express Mail mailing label thereon is an oversight that can be avoided by the exercise of reasonable care, requests for waiver of this requirement will **not** be granted on petition." Notice of Oct. 24, 1996, 60 Fed. Reg. 56,439, at 56,442.*

[redacted]

ELEMENT-1002
IPR2025-01108, IPR2025-01109

1. Type of Application

This new application is for a(n)

(check one applicable item below)

☒ Original (nonprovisional)

☐ Design

☐ Plant

WARNING: *"**Do not** use this transmittal for a completion in the U.S. of an International Application under 35 U.S.C. § 37(c)(4), unless the International Application is being filed as a divisional, continuation or continuation-in-part application.*

WARNING: ***Do not** use this transmittal for the filing of a provisional application.*

NOTE: If one of the following 3 items apply, then complete and attach ADDED PAGES FOR NEW APPLICATION TRANSMITTAL WHERE BENEFIT OF A PRIOR U.S. APPLICATION CLAIMED and a NOTIFICATION IN PARENT APPLICATION OF THE FILING OF THIS CONTINUATION APPLICATION.

☐ Divisional
☐ Continuation
☐ Continuation-in-part (C-I-P)

2. Benefit of Prior U.S. Application(s) (35 U.S.C. §§ 119(e), 120, or 121)

NOTE: A nonprovisional application may claim an invention disclosed in one or more prior filed copending nonprovisional applications or copending international applications designating the United States of America. In order for a nonprovisional application to claim the benefit of a prior filed copending nonprovisional application or copending international application designating the United States of America, each prior application must name as an inventor at least one inventor named in the later filed nonprovisional application and disclose the named inventor's invention claimed in at least one claim of the later filed nonprovisional application in the manner provided by the first paragraph of 35 U.S.C. § 112. Each prior application must also be:

(i) An international application entitled to a filing date in accordance with PCT Article 11 and designated the United States of America; or

(ii) Complete as set forth in § 1.51(b); or

(iii) Entitled to a filing date as set forth in § 1.53(b) or § 1.53(d) and include the basic filing fee set forth in § 1.16; or

(iv) Entitled to a filing date as set forth in § 1.53(b) and have paid therein the processing and retention fee set forth in § 1.21(l) within the time period set forth in § 1.53(f).

37 C.F.R. § 1.78(a)(1).

NOTE: If the new application being transmitted is a divisional, continuation or a continuation-in-part of a parent case, or where the parent case is an International Application which designated the U.S., or benefit of a prior provisional application is claimed, then check the following item and complete and attach ADDED PAGES FOR NEW APPLICATION TRANSMITTAL WHERE BENEFIT OF PRIOR U.S. APPLICATION(S) CLAIMED.

WARNING: *If an application claims the benefit of the filing date of an earlier filed application under 35 U.S.C. §§ 120, 121 or 365(c), the 20-year term of that application will be based upon the filing date of the earliest U.S. application that the application makes reference to under 35 U.S.C. §§ 120,121 or 365(c). (35 U.S.C. § 154(a)(2) does not take into account, for the determination of the patent term, any application on which priority is claimed under 35 U.S.C. §§ 199, 365(a) or 365(b).) For a c-i-p application, applicant should review whether any claim in the patent that will issue is supported by an earlier application and, if not, the applicant should consider canceling the reference to the earlier filed application. The term of a patent is not based on a claim-by-claim approach. See Notice of April 14, 1995, 60 Fed. Reg. 20,195, at 20,205.*

WARNING: *When the last day of pendency of a provisional application falls on a Saturday, Sunday, or Federal holiday within the District of Columbia, any nonprovisional application claiming benefit of the provisional application* ***must*** *be filed prior to the Saturday, Sunday, or Federal holiday within the District of Columbia. See 37 C.F.R. § 1.78(a)(3).*

☒ The new application being transmitted claims the benefit of prior U.S. application(s). Enclosed are ADDED PAGES FOR NEW APPLICATION TRANSMITTAL WHERE BENEFIT OF PRIOR U.S. APPLICATION(S) CLAIMED.

3. Papers Enclosed

A. Required for filing date under 37 C.F.R. § 1.53(b) (Regular) or 37 C.F.R. § 1.153 (Design) Application

36 Pages of specification
8 Pages of claims
10 Sheets of drawings

WARNING: ***DO NOT*** *submit original drawings. A high quality copy of the drawings should be supplied when filing a patent application. The drawings that are submitted to the Office must be on strong, white, smooth, and non-shiny paper and meet the standards according to § 1.84. If corrections to the drawings are necessary, they should be made to the original drawing and a high-quality copy of the corrected original drawing then submitted to the Office. Only one copy is required or desired. For comments on proposed then-new 37 C.F.R. § 1.84, see Notice of March 9, 1988 (1990 O.G. 57-62).*

NOTE: "Identifying indicia, if provided, should include the application number or the title of the invention, inventor's name, docket number (if any), and the name and telephone number of a person to call if the Office is unable to match the drawings to the proper application. This information should be placed on the back of each sheet of drawing a minimum distance of 1.5 cm (5/8 inch) down from the top of the page . . ." 37 C.F.R. § 1.84(c)).

(complete the following, if applicable)

☐ The enclosed drawing(s) are photograph(s). Three (3) sets of photographs and a "PETITION TO ACCEPT PHOTOGRAPH(S) AS DRAWING(S)" are attached. 37 C.F.R. § 1.84(b).
☐ The enclosed drawing(s) are in color. Three (3) sets of color drawings and a "PETITION TO ACCEPT COLOR DRAWING(S)" are attached. 37 C.F.R. §§ 1.84(a)(2) and 1.84(b).
☒ formal
☐ informal

B. Other Papers Enclosed

___ Pages of declaration and power of attorney
1 Pages of abstract
1 Other (Title Page)

4. Additional papers enclosed

☐ Amendment to claims

☐ Cancel in this application claims _____before calculating the filing fee. (At least one original independent claim must be retained for filing purposes.)
☐ Add the claims shown on the attached amendment. (Claims added have been numbered consecutively following the highest numbered original claims.)

☐ Preliminary Amendment

☐ Information Disclosure Statement (37 C.F.R. § 1.98)

☐ Form PTO-1449 (PTO/SB/08A and 08B)

☐ Citations

- ☐ Declaration of Biological Deposit
- ☐ Submission of "Sequence Listing," computer readable copy and/or amendment pertaining thereto for biotechnology invention containing nucleotide and/or amino acid sequence.
- ☐ Authorization of Attorney(s) to Accept and Follow Instructions from Representative
- ☐ Special Comments
- ☐ Other

5. Declaration or oath (including power of attorney)

NOTE: A newly executed declaration is not required in a continuation or divisional application provided that the prior nonprovisional application contained a declaration as required, the application being filed is by all or fewer than all the inventors named in the prior application, there is no new matter in the application being filed, and a copy of the executed declaration filed in the prior application (showing the signature or an indication thereon that it was signed) is submitted. The copy must be accompanied by a statement requesting deletion of the names of person(s) who are not inventors of the application being filed. If the declaration in the prior application was filed under § 1.47, then a copy of that declaration must be filed accompanied by a copy of the decision granting § 1.47 status or, if a nonsigning person under § 1.47 has subsequently joined in a prior application, then a copy of the subsequently executed declaration must be filed. See 37 C.F.R. §§ 1.63(d)(1)-(3).

NOTE: A declaration filed to complete an application must be executed, identify the specification to which it is directed, identify each inventor by full name including family name and at least one given name, without abbreviation together with any other given name or initial, and the residence, post office address and country or citizenship of each inventor, and state whether the inventor is a sole or joint inventor. 37 C.F.R. § 1.63(a)(1)-(4).

NOTE: "The inventorship of a nonprovisional application is that inventorship set forth in the oath or declaration as prescribed by § 1.62, except as provided for in § 1.53(d)(4) and § 1.63(d). If an oath or declaration as prescribed by § 1.63 is not filed during the pendency of a nonprovisional application, the inventorship is that inventorship set forth in the application papers filed pursuant to § 1.53(b), unless a petition under this paragraph accompanied by the fee set forth in § 1.17(l) is filed supplying or changing the name or names of the inventor or inventors." 37 C.F.R. § 1.41(a)(1).

☐ Enclosed

Executed by

(check **all** applicable boxes)

- ☐ inventor(s).
- ☐ legal representative of inventor(s). 37 C.F.R. §§ 1.42 or 1.43.
- ☐ joint inventor or person showing a proprietary interest on behalf of inventor who refused to sign or cannot be reached.
  - ☐ This is the petition required by 37 C.F.R. § 1.47 and the statement required by 37 C.F. R. § 1.47 is also attached. *See* item 13 below for fee.

☒ Not Enclosed

NOTE: Where the filing is a completion in the U.S. of an International Application or where the completion of the U.S. application contains subject matter in addition to the International Application, the application may be treated as a continuation or continuation-in-part, as the case may be, utilizing ADDED PAGE FOR NEW APPLICATION TRANSMITTAL WHERE BENEFIT OF PRIOR U.S. APPLICATION CLAIMED.

- ☐ Application is made by a person authorized under 37 C.F.R. § 1.41(c) on behalf of *all* the above named inventor(s).

(The declaration or oath, along with the surcharge required by 37 C.F.R. § 1.16(e) can be filed subsequently).

☐ Showing that the filing is authorized.
(not required unless called into question. 37 C.F.R. § 1.41(d))

6. Inventorship Statement

WARNING: *If the named inventors are each not the inventors of all the claims an explanation, including the ownership of the various claims at the time the last claimed invention was made, should be submitted.*

The inventorship for all the claims in this application are:

☒ The same.

or

☐ Not the same. An explanation, including the ownership of the various claims at the time the last claimed invention was made,
☐ is submitted.
☐ will be submitted

7. Language

NOTE: An application including a signed oath or declaration may be filed in a language other than English. An English translation of the non-English language application and the processing fee of $130.00 required by 37 C.F.R. § 1.17(k) is required to be filed with the application, or within such time as may be set by the Office. 37 C.F.R. § 1.52(d).

☒ English

☐ Non English

☐ The attached translation includes a statement that the translation is accurate.

37 C.F.R. § 1.52(d).

8. Assignment

☒ An assignment of the invention to Nokia Corporation

☐ is attached. A separate ☐ "COVER SHEET FOR ASSIGNMENT (DOCUMENT) ACCOMPANYING NEW PATENT APPLICATION" or ☐ FORM PTO 1595 is also attached.
☒ will follow.

NOTE: "If an assignment is submitted with a new application, send two separate letters-one for the application and one for the assignment." Notice of May 4, 1990 (1114 O.G. 77-78).

WARNING: *A newly executed "CERTIFICATE UNDER 37 C.F.R. § 3.73(b)" must be filed when a continuation-in-part application is filed by an assignee. Notice of April 30, 193, 1150 O.G. 62-64.*

☐ This is a ☐ continuation ☐ divisional application and the assignment document for the parent application 0 /_____ was filed on _____.

Reel _____
Frame_____

9. Certified Copy

Certified copy(ies) of application(s)

Country	Appln. No.	Filed
Country	Appln. No.	Filed
Country	Appln. No.	Filed

from which priority is claimed

☐ is (are) attached.
☐ will follow.

NOTE: The foreign application forming the basis for the claim for priority must be referred to in the oath or declaration. 37 C.F.R. § 1.55(a) and 1.63.

NOTE: This item is for any foreign priority for which the application being filed directly relates. If any parent U.S. application or International Application from which this application claims benefit under 35 U.S.C. § 120 is itself entitled to priority from a prior foreign application, then complete item 18 on the ADDED PAGES FOR NEW APPLICATION TRANSMITTAL WHERE BENEFIT OF PRIOR U.S. APPLICATION(S) CLAIMED.

10. Fee Calculation (37 C.F.R. § 1.16)

A. ☒ Regular application

CLAIMS AS FILED

Number filed	Number Extra		Rate	Basic Fee 37 C.F.R. § 1.16(a) $750.00
Total Claims (37 C.F.R. § 1.16(c)) 27 -20 =	7	x	$18.00 =	126.00
Independent Claims (37 C.F.R. § 1.16(b)) 7 - 3 =	4	x	$84.00 =	336.00
Multiple dependent claim(s), if any (37 C.F.R. § 1.16(d))		+	$280.00	

☐ Amendment canceling extra claims is enclosed.
☐ Amendment deleting multiple-dependencies is enclosed.
☐ Fee for extra claims is not being paid at this time.

NOTE: If the fees for extra claims are not paid on filing, they must be paid or the claims canceled by amendment, prior to the expiration of the time period set for response by the Patent and Trademark Office in any notice of fee deficiency. 37 C.F.R. § 1.16(d).

Filing Fee Calculation $ 750.00

B. ☐ Design application
($330.00 – 37 C.F.R. § 1.16(f))

Filing Fee Calculation $_____

C. ☐ Plant application

($510.00 - 37 C.F.R. § 1.16(g))

Filing Fee Calculation $_____

11. Small Entity Statement(s)

☐ Statement(s) that this is a filing by a small entity under 37 C.F.R. §§ 1.9 and 1.27 is **no longer necessary**.

WARNING: *"Status as a small entity must be specifically established in each application or patent in which the status is available and desired. Status as a small entity in one application or patent does not affect any other application or patent, including applications or patents which are directly or indirectly dependent upon the application or patent in which the status has been established. The refiling of an application under § 1.53 as a continuation, division, or continuation-in-part (including a continued prosecution application under § 1.53(d)), or the filing of a reissue application requires a new determination as to continued entitlement to small entity status for the continuing or reissue application. A nonprovisional application claiming benefit under 35 U.S.C. § 119(e), 120, 121, or 365(c) of a prior application, or a reissue application may rely on a statement filed in the prior application or in the patent if the nonprovisional application or the reissue application includes a reference to the statement in the prior application or in the patent or includes a copy of the statement in the prior application or in the patent and status as a small entity is still proper and desired. The payment of the small entity basic statutory filing fee will be treated as such a reference for purposes of this section." 37 C.F.R. § 1.28(a)(2).*

WARNING: *"Small entity status must not be established when the person or persons signing the. . . statement can **unequivocally** make the required self-certification." M.P.E.P., § 509.03, 6th ed., rev. 2, July 1996 (emphasis added).*

(complete the following, if applicable)

☐ Status as a small entity was claimed in prior application

_____/_____, filed on _____, from which benefit is being claimed for this application under:

35 U.S.C. § ☐ 119(e),

☐ 120,

☐ 121,

☐ 365(c),

and which status as a small entity is still proper and desired.

☐ A copy of the statement in the prior application is included.

Filing Fee Calculation (50% of **A**, **B**, or **C** above)

$_____

NOTE: Any excess of the full fee paid will be refunded if a small entity statement and a refund request are filed within 2 months of the date of timely payment of a full fee. The two-month period is not extendable under § 1.136. 37 C.F.R. § 1.28(a).

12. Request for International-Type Search (37 C.F.R. § 1.104(d))

(complete, if applicable)

☐ Please prepare an international-type search report for this application at the time when national examination on the merits takes place.

13. Fee Payment Being Made at This Time

☒ Not Enclosed

☒ No filing fee is to be paid at this time.
(This and the surcharge required by 37 C.F.R. § 1.16(e) can be paid subsequently.)

☐ Enclosed

☐ Filing fee $_____

☐ Recording assignment
($40.00 – 37 C.F.R. § 1.21(h))
(See attached "COVER SHEET FOR ASSIGNMENT ACCOMPANYING NEW APPLICATION.") $_____

☐ Petition fee for filing by other than all the inventors or person on behalf of the inventor where inventor refused to sign or cannot be reached.
($130.00 – 37 C.F.R. §§ 1.47 and 1.17(i)) $_____

☐ For processing an application with a specification in a non-English language
($130.00; 37 C.F.R. §§ 1.52(d) and 1.17(k)) $_____

☐ Processing and retention fee
($130.00, 37 C.F.R. §§ 1.52(d) and 1.21(l)) $_____

☐ Fee for international-type search report
($40.00; 37 C.F.R. § 1.21(e)) $_____

NOTE: 37 C.F.R. § 1.21(l) establishes a fee for processing and retaining any application that is abandoned for failing to complete the application pursuant to 37 C.F.R. § 1.53(f) and this, as well as the changes to 37 C.F.R. §§ 1.53 and 1.78(a)(1), indicate that in order to obtain the benefit of a prior U.S. application, either the basic filing fee must be paid, or the processing and retention fee of § 1.21(l) must be paid, within 1 year from the notification under § 53(f).

Total fees enclosed **$_____**

14. Method of Payment of Fees

☐ Attached is a ☐ check ☐ money order in the amount of $_____

☐ Authorization is hereby made to charge the amount of $_____

☐ to Deposit Account No. _____

☐ to Credit card as shown on the attached credit card information authorization form PTO-2038.

***WARNING:**: Credit card information should **not** be included on this form as it may become public.*

☐ Charge any additional fees required by this paper or credit any overpayment in the manner authorized above.

15. Authorization to Charge Additional Fees

WARNING: *If no fees are to be paid on filing, the following items should not be completed.*

WARNING: *Accurately count claims, especially multiple dependent claims, to avoid unexpected high charges, if extra claim charges are authorized.*

☐ The Office is hereby authorized to charge, in the manner shown above, the following additional fees that may be required by this paper and during the entire pendency of this application.

☐ 37 C.F.R. § 1.16(a), (f), or (g) (filing fees)
☐ 37 C.F.R. § 1.16(b), (c), and (d) (presentation of extra claims)

NOTE: Because additional fees for excess or multiple dependent claims not paid on filing or on later presentation must only be paid or these claims canceled by amendment prior to the expiration of the time period set for response by the P.T.O. in any notice of fee deficiency (37 C.F.R. § 1.16(d)), it might be best not to authorize the P.T.O. to charge additional claim fees, except possibly when dealing with amendments after final action.

☐ 37 C.F.R. § 1.16(e) (surcharge for filing the basic filing fee and/or declaration on a date later than the filing date of the application)

☐ 37 C.F.R. § 1.17(a)(1)-(5) (extension fees pursuant to § 1.136(a))

☐ 37 C.F.R. § 1.17 (application processing fees)

WARNING: *"...A written request may be submitted in an application that is an authorization to treat any concurrent or future reply, requiring a petition for an extension of time under this paragraph for its timely submission, as incorporating a petition for extension of time for the appropriate length of time. An authorization to charge all required fees, fees under § 1.17, or all required extension of time fees will be treated as a constructive petition for an extension of time in any concurrent or future reply requiring a petition for an extension of time under this paragraph for its timely submission. Submission of the fee set forth in § 1.17(a) will also be treated as a constructive petition for an extension of time in any concurrent reply requiring a petition for an extension of time under this paragraph for its timely submission." 37 C.F.R. § 1.136(a)(3).*

☐ 37 C.F.R. § 1.18 (issue fee at or before mailing of Notice of Allowance, pursuant to 37 C.F.R. § 1.311(b))

NOTE: Where an authorization to charge the issue fee to a deposit account has been filed before the mailing of a Notice of Allowance, the issue fee will be automatically charged to the deposit account at the time of mailing the Notice of Allowance. 37 C.F.R. § 1.311(b).

NOTE: 37 C.F.R. § 1.28(b) requires "Notification of any change in status resulting in loss of entitlement to small entity status must be filed in the application . . . prior to paying, or at the time of paying, . . . issue fee." From the wording of 37 C.F.R. § 1.28(b), (a) notification of change of status must be made even if the fee is paid as "other than a small entity" and (b) no notification is required if the change is to another small entity.

16. Instructions as to Overpayment

NOTE: "...Amounts of twenty-five dollars or less will not be returned unless specifically requested within a reasonable time, nor will the payer be notified of such amounts; amounts over twenty-five dollars may be returned by check or, if requested, by credit to a deposit account." 37 C.F.R. § 1.26(a).

☐ Credit Account No._____
☐ Refund

Date: March 14, 2003

Reg. No. 40,061

Tel. No. (203) 261-1234

Customer No. 004955

Ken Lao
SIGNATURE OF PRACTITIONER

Kenneth Q. Lao
(type or print name of practitioner
Ware, Fressola, Van Der Sluys &
Adolphson LLP
755 Main Street
P.O. (Correspondence) Address
P.O. Box 224
Monroe, CT 06468

☐ **Incorporation by reference of added pages**

(check the following item if the application in this transmittal claims the benefit of prior U.S. application(s) (including an international application entering the U.S. stage as a continuation, divisional or C-I-P application) and complete and attach the ADDED PAGES FOR NEW APPLICATION TRANSMITTAL WHERE BENEFIT OF PRIOR U.S. APPLICATION(S) CLAIMED.)

☒ Plus Added Pages for New Application Transmittal Where Benefit of Prior U.S. Application(s) Claimed

Number of pages added 5

☐ Plus Added Pages for Papers Referred to in Item 4 Above

Number of pages added _____

☐ Plus added pages deleting names of inventor(s) named in prior application(s) who is/are no longer inventor(s) of the subject matter claimed in this application.

Number of pages added _____

☐ Plus "Assignment Cover Letter Accompanying New Application"

Number of pages added _____

☐ **Statement Where No Further Pages Added**

(if no further pages form a part of this Transmittal, then end this Transmittal with this page and check the following item.

☐ This transmittal ends with this page.

Practitioner's Docket No. 944-001.105 ***PATENT***

ADDED PAGES FOR APPLICATION TRANSMITTAL WHERE BENEFIT OF PRIOR U.S APPLICATION(S) CLAIMED

NOTE: See 37 CFR 1.78.

17. Relate Back

WARNING: *If an application claims the benefit of the filing date of an earlier filed application under 35 U.S.C. 120, 121 or 365(c), the 20-year term of that application will be based upon the filing date of the earliest U.S. application that the application makes reference to under 35 U.S.C. 120, 121 or 365(c). 35 U.S.C. 154(a)(2) does not take into account, for the determination of the patent term, any application on which priority is claimed under 35 U.S.C. 119, 365(a) or 365(b). For a c-i-p application, applicant should review whether any claim in the patent that will issue is supported by an earlier application and, if not, the applicant should consider canceling the reference to the earlier filed application. The term of a patent is not based on a claim-by-claim approach. See Notice of April 14, 1995, 60 Fed. Reg. 20,195, at 20,205.*

(complete the following, if applicable)

☒ Amend the specification by inserting, before the first line, the following sentence:

A. 35 U.S.C. 119(e)

NOTE: "Any nonprovisional application claiming the benefit of one or more prior filed copending provisional applications must contain or be amended to contain in the first sentence of the specification following the title a reference to each such prior provisional application, identifying it as a provisional application, and including the provisional application number (consisting of series code and serial number). "37 C.F.R. § 1.78(a)(4).

☒ "This application claims the benefit of U.S. Provisional Application(s) No(s).:

APPLICATION NO(S).:	FILING DATE
60 / 365,072	March 15, 2002 "
____ / ____	____ "
____ / ____	____ "

B. 35 U.S.C. 120, 121 and 365(c)

NOTE: "Except for a continued prosecution application filed under § 1.53(d), any nonprovisional application claiming the benefit of one or more prior filed copending nonprovisional applications or international applications designating the United States of America must contain or be amended to contain in the first sentence of the specification following the title a reference to each such prior application, identifying it by application number (consisting of the series code and serial number) or international application number and international filing date and indicating the relationship of the applications . . . Cross-references to other related applications may be made when appropriate." (See § 1.14(a)). 37 C.F.R. § 1.78(a)(2).

☐ "This application is a

☐ continuation

☐ continuation-in-part

☐ divisional

of copending application(s)

☐ application number 0 /_____ filed on _____

☐ International Application _____ filed on _____

_____ and which designated the U.S."

NOTE: The proper reference to a prior filed PCT application that entered the U.S. national phase is the U.S. serial number and the filing date of the PCT application that designated the U.S.

NOTE: (1) Where the application being transmitted adds subject matter to the International Application, then the filing can be as a continuation-in-part or (2) if it is desired to do so for other reasons then the filing can be as a continuation.

NOTE: The deadline for entering the national phase in the U.S. for an international application was clarified in the Notice of April 28, 1987 (1079 O.G. 32 to 46) as follows:

"The Patent and Trademark Office considers the International application to be pending until the 22nd month from the priority date if the United States has been designated and no Demand for International Preliminary Examination has been filed prior to the expiration of the 19th month from the priority date and until the 32nd month from the priority date if a Demand for International Preliminary Examination which elected the United States of America has been filed prior to the expiration of the 19th month from the priority date, provided that a copy of the international application has been communicated to the Patent and Trademark Office within the 20 or 30 month period respectively. If a copy of the international application has not been communicated to the Patent and Trademark Office within the 20 or 30 month period respectively, the international application becomes abandoned as to the United States 20 or 30 months from the priority date respectively. These periods have been placed in the rules as paragraph (h) of § 1.494 and paragraph (i) of § 1.495. A continuing application under 35 U.S.C. 365(c) and 120 may be filed any time during the pendency of the international application."

☐ "The nonprovisional application designated above, namely application _____ / _____, filed _____, claims the benefit of U.S. Provisional Application(s) No(s).:

APPLICATION NO(S).:	**FILING DATE**
_____ / _____	_____ "
_____ / _____	_____ "
_____ / _____	_____ "

☐ Where more than one reference is made above, please combine all references into one sentence.

18. Relate Back – 35 U.S.C. 119 Priority Claim for Prior Application

The prior U.S. application(s), including any prior International Application designating the U.S., identified above in item 17B, in turn itself claim(s) foreign priority(ies) as follows:

Country	Appln. No.	Filed on

The certified copy(ies) has (have)

☐ been filed on _____, in prior application 0 /_____, which was filed on _____.

☐ is (are) attached.

*WARNING: The certified copy of the priority application that may have been communicated to the PTO by the International Bureau may **not** be relied on without any need to file a certified copy of the priority application **in the continuation application.** This is so because the certified copy of the priority application communicated by the International Bureau is placed in a folder and is not assigned a U.S. serial number unless the national stage is entered. Such folders are disposed of if the national stage is not entered. Therefore, such certified copies may not be available if needed later in the prosecution of a continuing application. An alternative would be to physically remove the priority documents from the folders and transfer them to the continuing application. The resources required to request transfer, retrieve the folders, make suitable record notations, transfer the certified copies, enter and make a record of such copies in the Continuing Application are substantial. Accordingly, the priority documents in folders of international applications that have not entered the national stage may not be relied on. Notice of April 28, 1987 (1079 O.G. 32 to 46).*

19. Maintenance of Copendency of Prior Application

NOTE: The PTO finds it useful if a copy of the petition filed in the prior application extending the term for response is filed with the papers constituting the filing of the continuation application. Notice of November 5, 1985 (1060 O.G. 27).

A. ☐ Extension of time in prior application

*(This item **must** be completed and the papers filed in the prior application, if the period set **in the prior application** has run.)*

☐ A petition, fee and response extends the term in the pending **prior** application until _____.

☐ A **copy** of the petition filed in prior application is attached.

B. ☐ Conditional Petition for Extension of Time in Prior Application

(complete this item, if previous item not applicable)

☐ A conditional petition for extension of time is being filed in the pending **prior** application.

☐ A **copy** of the conditional petition filed in the prior application is attached.

20. Further Inventorship Statement Where Benefit of Prior Application(s) Claimed

(complete applicable item (a), (b) and/or (c) below)

(a) ☐ This application discloses and claims only subject matter disclosed in the prior application whose particulars are set out above and the inventor(s) in this application are

☐ the same.

☐ less than those named in the prior application. It is requested that the following inventor(s) identified for the prior application be deleted:

_____

(type name(s) of inventor(s) to be deleted)

(b) ☐ This application discloses and claims additional disclosure by amendment and a new declaration or oath is being filed. With respect to the prior application, the inventor(s) in this application are

☐ the same.

☐ the following additional inventor(s) have been added:

_____

(type name(s) of inventor(s) to be added)

(c) The inventorship for all the claims in this application are

☒ the same

☐ not the same. An explanation, including the ownership of the various claims at the time the last claimed invention was made

☐ is submitted.

☐ will be submitted.

21. Abandonment of Prior Application (if applicable)

☐ Please abandon the prior application at a time while the prior application is pending, or when the petition for extension of time or to revive in that application is granted, and when this application is granted a filing date, so as to make this application copending with said prior application.

NOTE: According to the Notice of May 13, 1983 (103, TMOG 6-7), the filing of a continuation or continuation-in-part application is a proper response with respect to a petition for extension of time or a petition to revive and should include the express abandonment of the prior application conditioned upon the granting of the petition and the granting of a filing date to the continuing application.

22. Petition for Suspension of Prosecution for the Time Necessary to File an Amendment

WARNING: *"The claims of a new application may be finally rejected in the first Office action in those situations where (1) the new application is a continuing application of, or a substitute for, an earlier application, and (2) all the claims of the new application (a) are drawn to the same invention claimed in the earlier application, and (b) would have been properly finally rejected on the grounds of art of record in the next Office action if they had been entered in the earlier application." MPEP, § 706.07(b).*

NOTE: Where it is possible that the claims on file will give rise to a first action final for this continuation application and for some reason an amendment cannot be filed promptly (e.g., experimental data is being gathered) it may be desirable to file a petition for suspension of prosecution for the time necessary.

(check the next item, if applicable)

☐ There is provided herewith a Petition To Suspend Prosecution for the Time Necessary to File An Amendment (New Application Filed Concurrently)

23. Small Entity (37 CFR § 1.28(a))

☐ Applicant has established small entity status by the filing of a statement in parent application 0 /_____ on _____.

☐ A copy of the statement previously filed is included.

WARNING: *See 37 CFR § 1.28(a).*

24. NOTIFICATION IN PARENT APPLICATION OF THIS FILING

☐ A notification of the filing of this
(check one of the following)

☐ continuation

☐ continuation-in-part

☐ divisional

is being filed in the parent application, from which this application claims priority under 35 U.S.C. § 120.

PATENT
Attorney Docket No. 944-001.105

IN THE UNITED STATES PATENT AND TRADEMARK OFFICE

PATENT APPLICATION

of

Jani LAINEMA

for a

METHOD FOR CODING MOTION IN A VIDEO SEQUENCE

Express Mail Label # EV 137072745US

PATENT
944-001.105

METHOD FOR CODING MOTION IN A VIDEO SEQUENCE

Field of the Invention

The invention relates generally to communication systems and more particularly to motion compensation in video coding.

Background of the invention

A digital video sequence, like an ordinary motion picture recorded on film, comprises a sequence of still images, the illusion of motion being created by displaying consecutive images of the sequence one after the other at a relatively fast rate, typically 15 to 30 frames per second. Because of the relatively fast frame display rate, images in consecutive frames tend to be quite similar and thus contain a considerable amount of redundant information. For example, a typical scene may comprise some stationary elements, such as background scenery, and some moving areas, which may take many different forms, for example the face of a newsreader, moving traffic and so on. Alternatively, or additionally, so-called "global motion" may be present in the video sequence, for example due to translation, panning or zooming of the camera recording the scene. However, in many cases, the overall change between one video frame and the next is rather small.

Each frame of an uncompressed digital video sequence comprises an array of image pixels. For example, in a commonly used digital video format, known as the Quarter Common Interchange Format (QCIF), a frame comprises an array of 176 x 144 pixels, in which case each frame has 25,344 pixels. In turn, each pixel is represented by a certain number of bits, which carry information about the luminance and/or color content of the region of the image corresponding to the pixel. Commonly, a so-called YUV color model is used to represent the luminance and chrominance content of the image. The luminance, or Y, component represents the intensity (brightness) of the image, while the color content of the image is represented by two chrominance or color difference components, labelled U and V.

Color models based on a luminance/chrominance representation of image content provide certain advantages compared with color models that are based on a representation involving primary colors (that is Red, Green and Blue, RGB). The human visual system is more sensitive to intensity variations than it is to color variations and YUV color models exploit this property by using a lower spatial resolution for the chrominance components (U,

V) than for the luminance component (Y). In this way, the amount of information needed to code the color information in an image can be reduced with an acceptable reduction in image quality.

The lower spatial resolution of the chrominance components is usually attained by spatial sub-sampling. Typically, each frame of a video sequence is divided into so-called "macroblocks", which comprise luminance (Y) information and associated (spatially sub-sampled) chrominance (U, V) information. Figure 3 illustrates one way in which macroblocks can be formed. Figure 3a shows a frame of a video sequence represented using a YUV color model, each component having the same spatial resolution. Macroblocks are formed by representing a region of 16x16 image pixels in the original image (Figure 3b) as four blocks of luminance information, each luminance block comprising an 8x8 array of luminance (Y) values and two spatially corresponding chrominance components (U and V) which are sub-sampled by a factor of two in the horizontal and vertical directions to yield corresponding arrays of 8x8 chrominance (U, V) values (see Figure 3c).

A QCIF image comprises 11x9 macroblocks. If the luminance blocks and chrominance blocks are represented with 8 bit resolution (that is by numbers in the range 0 to 255), the total number of bits required per macroblock is (16x16x8)+2x(8x8x8) = 3072 bits. The number of bits needed to represent a video frame in QCIF format is thus 99x3072 = 304,128 bits. This means that the amount of data required to transmit/record/display an uncompressed video sequence in QCIF format, represented using a YUV color model, at a rate of 30 frames per second, is more than 9 Mbps (million bits per second). This is an extremely high data rate and is impractical for use in video recording, transmission and display applications because of the very large storage capacity, transmission channel capacity and hardware performance required.

If video data is to be transmitted in real-time over a fixed line network such as an ISDN (Integrated Services Digital Network) or a conventional PSTN (Public Switched Telephone Network), the available data transmission bandwidth is typically of the order of 64kbits/s. In mobile videotelephony, where transmission takes place at least in part over a radio communications link, the available bandwidth can be as low as 20kbits/s. This means that a significant reduction in the amount of information used to represent video data must be achieved in order to enable transmission of digital video sequences over low bandwidth

communication networks. For this reason, video compression techniques have been developed which reduce the amount of information transmitted while retaining an acceptable image quality.

Video compression methods are based on reducing the redundant and perceptually irrelevant parts of video sequences. The redundancy in video sequences can be categorised into spatial, temporal and spectral redundancy. "Spatial redundancy" is the term used to describe the correlation (similarity) between neighbouring pixels within a frame. The term "temporal redundancy" expresses the fact that objects appearing in one frame of a sequence are likely to appear in subsequent frames, while "spectral redundancy" refers to the correlation between different color components of the same image.

Sufficiently efficient compression cannot usually be achieved by simply reducing the various forms of redundancy in a given sequence of images. Thus, most current video encoders also reduce the quality of those parts of the video sequence which are subjectively the least important. In addition, the redundancy of the compressed video bit-stream itself is reduced by means of efficient loss-less encoding. Generally, this is achieved using a technique known as entropy coding.

There is often a significant amount of spatial redundancy between the pixels that make up each frame of a digital video sequence. In other words, the value of any pixel within a frame of the sequence is substantially the same as the value of other pixels in its immediate vicinity. Typically, video coding systems reduce spatial redundancy using a technique known as "block-based transform coding", in which a mathematical transformation, such as a two-dimensional Discrete Cosine Transform (DCT), is applied to blocks of image pixels. This transforms the image data from a representation comprising pixel values to a form comprising a set of coefficient values representative of spatial frequency components significantly reducing spatial redundancy and thereby producing a more compact representation of the image data.

Frames of a video sequence which are compressed using block-based transform coding, without reference to any other frame within the sequence, are referred to as INTRA-coded or I-frames. Additionally, and where possible, blocks of INTRA-coded frames are predicted from previously coded blocks within the same frame. This technique, known as

INTRA-prediction, has the effect of further reducing the amount of data required to represent an INTRA-coded frame.

Generally, video coding systems not only reduce the spatial redundancy within individual frames of a video sequence, but also make use of a technique known as "motion-compensated prediction", to reduce the temporal redundancy in the sequence. Using motion-compensated prediction, the image content of some (often many) frames in a digital video sequence is "predicted" from one or more other frames in the sequence, known as "reference" frames. Prediction of image content is achieved by tracking the motion of objects or regions of an image between a frame to be coded (compressed) and the reference frame(s) using "motion vectors". In general, the reference frame(s) may precede the frame to be coded or may follow it in the video sequence. As in the case of INTRA-coding, motion compensated prediction of a video frame is typically performed macroblock-by-macroblock.

Frames of a video sequence which are compressed using motion-compensated prediction are generally referred to as INTER-coded or P-frames. Motion-compensated prediction alone rarely provides a sufficiently precise representation of the image content of a video frame and therefore it is typically necessary to provide a so-called "prediction error" (PE) frame with each INTER-coded frame. The prediction error frame represents the difference between a decoded version of the INTER-coded frame and the image content of the frame to be coded. More specifically, the prediction error frame comprises values that represent the difference between pixel values in the frame to be coded and corresponding reconstructed pixel values formed on the basis of a predicted version of the frame in question. Consequently, the prediction error frame has characteristics similar to a still image and block-based transform coding can be applied in order to reduce its spatial redundancy and hence the amount of data (number of bits) required to represent it.

In order to illustrate the operation of a generic video coding system in greater detail, reference will now be made to the exemplary video encoder and video decoder illustrated in Figures 1 and 2 of the accompanying drawings. The video encoder 100 of Figure 1 employs a combination of INTRA- and INTER-coding to produce a compressed (encoded) video bit-stream and decoder **200** of Figure 2 is arranged to receive and decode the video bit-stream produced by encoder **100** in order to produce a reconstructed video sequence. Throughout the following description it will be assumed that the luminance component of a macroblock

comprises 16x16 pixels arranged as an array of 4, 8x8 blocks, and that the associated chrominance components are spatially sub-sampled by a factor of two in the horizontal and vertical directions to form 8x8 blocks, as depicted in Figure 3. Extension of the description to other block sizes and other sub-sampling schemes will be apparent to those of ordinary skill in the art.

The video encoder **100** comprises an input **101** for receiving a digital video signal from a camera or other video source (not shown). It also comprises a transformation unit **104** which is arranged to perform a block-based discrete cosine transform (DCT), a quantizer **106**, an inverse quantizer **108**, an inverse transformation unit **110**, arranged to perform an inverse block-based discrete cosine transform (IDCT), combiners **112** and **116**, and a frame store **120**. The encoder further comprises a motion estimator **130**, a motion field coder **140** and a motion compensated predictor **150**. Switches **102** and **114** are operated co-operatively by control manager **160** to switch the encoder between an INTRA-mode of video encoding and an INTER-mode of video encoding. The encoder **100** also comprises a video multiplex coder **170** which forms a single bit-stream from the various types of information produced by the encoder **100** for further transmission to a remote receiving terminal or, for example, for storage on a mass storage medium, such as a computer hard drive (not shown).

Encoder **100** operates as follows. Each frame of uncompressed video provided from the video source to input **101** is received and processed macroblock by macroblock, preferably in raster-scan order. When the encoding of a new video sequence starts, the first frame to be encoded is encoded as an INTRA-coded frame. Subsequently, the encoder is programmed to code each frame in INTER-coded format, unless one of the following conditions is met: 1) it is judged that the current macroblock of the frame being coded is so dissimilar from the pixel values in the reference frame used in its prediction that excessive prediction error information is produced, in which case the current macroblock is coded in INTRA-coded format; 2) a predefined INTRA frame repetition interval has expired; or 3) feedback is received from a receiving terminal indicating a request for a frame to be provided in INTRA-coded format.

The occurrence of condition 1) is detected by monitoring the output of the combiner **116**. The combiner **116** forms a difference between the current macroblock of the frame being coded and its prediction, produced in the motion compensated prediction block **150**. If

a measure of this difference (for example a sum of absolute differences of pixel values) exceeds a predetermined threshold, the combiner **116** informs the control manager **160** via a control line **119** and the control manager **160** operates the switches **102** and **114** via control line **113** so as to switch the encoder **100** into INTRA-coding mode. In this way, a frame which is otherwise encoded in INTER-coded format may comprise INTRA-coded macroblocks. Occurrence of condition 2) is monitored by means of a timer or frame counter implemented in the control manager **160**, in such a way that if the timer expires, or the frame counter reaches a predetermined number of frames, the control manager **160** operates the switches **102** and **114** via control line **113** to switch the encoder into INTRA-coding mode. Condition 3) is triggered if the control manager **160** receives a feedback signal from, for example, a receiving terminal, via control line **121** indicating that an INTRA frame refresh is required by the receiving terminal. Such a condition may arise, for example, if a previously transmitted frame is badly corrupted by interference during its transmission, rendering it impossible to decode at the receiver. In this situation, the receiving decoder issues a request for the next frame to be encoded in INTRA-coded format, thus re-initialising the coding sequence.

Operation of the encoder **100** in INTRA-coding mode will now be described. In INTRA-coding mode, the control manager **160** operates the switch **102** to accept video input from input line **118**. The video signal input is received macroblock by macroblock from input **101** via the input line **118**. As they are received, the blocks of luminance and chrominance values which make up the macroblock are passed to the DCT transformation block **104**, which performs a 2-dimensional discrete cosine transform on each block of values, producing a 2-dimensional array of DCT coefficients for each block. DCT transformation block 104 produces an array of coefficient values for each block, the number of coefficient values corresponding to the dimensions of the blocks which make up the macroblock (in this case 8x8). The DCT coefficients for each block are passed to the quantizer **106**, where they are quantized using a quantization parameter QP. Selection of the quantization parameter QP is controlled by the control manager **160** via control line **115**.

The array of quantized DCT coefficients for each block is then passed from the quantizer **106** to the video multiplex coder **170**, as indicated by line **125** in Figure 1. The video multiplex coder **170** orders the quantized transform coefficients for each block using a

zigzag scanning procedure, thereby converting the two-dimensional array of quantized transform coefficients into a one-dimensional array. Each non-zero valued quantized coefficient in the one dimensional array is then represented as a pair of values, referred to as *level* and *run*, where *level* is the value of the quantized coefficient and *run* is the number of consecutive zero-valued coefficients preceding the coefficient in question. The *run* and *level* values are further compressed in the video multiplex coder **170** using entropy coding, for example, variable length coding (VLC), or arithmetic coding.

Once the *run* and *level* values have been entropy coded using an appropriate method, the video multiplex coder **170** further combines them with control information, also entropy coded using a method appropriate for the kind of information in question, to form a single compressed bit-stream of coded image information **135**. It should be noted that while entropy coding has been described in connection with operations performed by the video multiplex coder **170**, in alternative implementations a separate entropy coding unit may be provided.

A locally decoded version of the macroblock is also formed in the encoder **100**. This is done by passing the quantized transform coefficients for each block, output by quantizer **106**, through inverse quantizer **108** and applying an inverse DCT transform in inverse transformation block **110**. In this way a reconstructed array of pixel values is constructed for each block of the macroblock. The resulting decoded image data is input to combiner **112**. In INTRA-coding mode, switch **114** is set so that the input to the combiner **112** via switch **114** is zero. In this way, the operation performed by combiner **112** is equivalent to passing the decoded image data unaltered.

As subsequent macroblocks of the current frame are received and undergo the previously described encoding and local decoding steps in blocks **104, 106, 108, 110** and **112**, a decoded version of the INTRA-coded frame is built up in frame store **120**. When the last macroblock of the current frame has been INTRA-coded and subsequently decoded, the frame store **120** contains a completely decoded frame, available for use as a motion prediction reference frame in coding a subsequently received video frame in INTER-coded format.

Operation of the encoder **100** in INTER-coding mode will now be described. In INTER-coding mode, the control manager **160** operates switch **102** to receive its input from line **117**, which comprises the output of combiner **116**. The combiner **116** receives the video

input signal macroblock by macroblock from input **101**. As combiner **116** receives the blocks of luminance and chrominance values which make up the macroblock, it forms corresponding blocks of prediction error information. The prediction error information represents the difference between the block in question and its prediction, produced in motion compensated prediction block **150**. More specifically, the prediction error information for each block of the macroblock comprises a two-dimensional array of values, each of which represents the difference between a pixel value in the block of luminance or chrominance information being coded and a decoded pixel value obtained by forming a motion-compensated prediction for the block, according to the procedure to be described below. Thus, in the exemplary video coding system considered here where each macroblock comprises, for example, an assembly of 8x8 blocks comprising luminance and chrominance values, the prediction error information for each block of the macroblock similarly comprises an 8x8 array of prediction error values.

The prediction error information for each block of the macroblock is passed to DCT transformation block **104**, which performs a two-dimensional discrete cosine transform on each block of prediction error values to produce a two-dimensional array of DCT transform coefficients for each block. DCT transformation block **104** produces an array of coefficient values for each prediction error block, the number of coefficient values corresponding to the dimensions of the blocks which make up the macroblock (in this case 8x8). The transform coefficients derived from each prediction error block are passed to quantizer **106** where they are quantized using a quantization parameter QP, in a manner analogous to that described above in connection with operation of the encoder in INTRA-coding mode. As before, selection of the quantization parameter QP is controlled by the control manager **160** via control line **115**.

The quantized DCT coefficients representing the prediction error information for each block of the macroblock are passed from quantizer **106** to video multiplex coder **170**, as indicated by line **125** in Figure 1. As in INTRA-coding mode, the video multiplex coder **170** orders the transform coefficients for each prediction error block using a certain zigzag scanning procedure and then represents each non-zero valued quantized coefficient as a *run-level* pair. It further compresses the *run-level* pairs using entropy coding, in a manner analogous to that described above in connection with INTRA-coding mode. Video multiplex

coder **170** also receives motion vector information (described in the following) from motion field coding block **140** via line **126** and control information from control manager **160**. It entropy codes the motion vector information and control information and forms a single bit-stream of coded image information, **135** comprising the entropy coded motion vector, prediction error and control information.

The quantized DCT coefficients representing the prediction error information for each block of the macroblock are also passed from quantizer **106** to inverse quantizer **108**. Here they are inverse quantized and the resulting blocks of inverse quantized DCT coefficients are applied to inverse DCT transform block **110**, where they undergo inverse DCT transformation to produce locally decoded blocks of prediction error values. The locally decoded blocks of prediction error values are then input to combiner **112**. In INTER-coding mode, switch **114** is set so that the combiner **112** also receives predicted pixel values for each block of the macroblock, generated by motion-compensated prediction block **150**. The combiner **112** combines each of the locally decoded blocks of prediction error values with a corresponding block of predicted pixel values to produce reconstructed image blocks and stores them in frame store **120**.

As subsequent macroblocks of the video signal are received from the video source and undergo the previously described encoding and decoding steps in blocks **104, 106, 108, 110, 112**, a decoded version of the frame is built up in frame store **120**. When the last macroblock of the frame has been processed, the frame store **120** contains a completely decoded frame, available for use as a motion prediction reference frame in encoding a subsequently received video frame in INTER-coded format.

The details of the motion-compensated prediction performed by video encoder **100** will now be considered.

Any frame encoded in INTER-coded format requires a reference frame for motion-compensated prediction. This means, necessarily, that when encoding a video sequence, the first frame to be encoded, whether it is the first frame in the sequence, or some other frame, must be encoded in INTRA-coded format. This, in turn, means that when the video encoder **100** is switched into INTER-coding mode by control manager **160**, a complete reference frame, formed by locally decoding a previously encoded frame, is already available in the

frame store **120** of the encoder. In general, the reference frame is formed by locally decoding either an INTRA-coded frame or an INTER-coded frame.

In the following description it will be assumed that the encoder performs motion compensated prediction on a macroblock basis, i.e. a macroblock is the smallest element of a video frame that can be associated with motion information. It will further be assumed that a prediction for a given macroblock is formed by identifying a region of 16x16 values in the luminance component of the reference frame that shows best correspondence with the 16x16 luminance values of the macroblock in question. Motion-compensated prediction in a video coding system where motion information may be associated with elements smaller than a macroblock will be considered later in the text.

The first step in forming a prediction for a macroblock of the current frame is performed by motion estimation block **130**. The motion estimation block **130** receives the blocks of luminance and chrominance values which make up the current macroblock of the frame to be coded via line **128**. It then performs a block matching operation in order to identify a region in the reference frame that corresponds best with the current macroblock. In order to perform the block matching operation, motion estimation block **130** accesses reference frame data stored in frame store **120** via line **127**. More specifically, motion estimation block **130** performs block-matching by calculating difference values (e.g. sums of absolute differences) representing the difference in pixel values between the macroblock under examination and candidate best-matching regions of pixels from a reference frame stored in the frame store **120**. A difference value is produced for candidate regions at all possible offsets within a predefined search region of the reference frame and motion estimation block **130** determines the smallest calculated difference value. The candidate region that yields the smallest difference value is selected as the best-matching region. The offset between the current macroblock and the best-matching region identified in the reference frame defines a "motion vector" for the macroblock in question. The motion vector typically comprises a pair of numbers, one describing the horizontal (Δx) between the current macroblock and the best-matching region of the reference frame, the other representing the vertical displacement (Δy).

Once the motion estimation block **130** has produced a motion vector for the macroblock, it outputs the motion vector to the motion field coding block **140**. The motion

field coding block **140** approximates the motion vector received from motion estimation block **130** using a motion model comprising a set of basis functions and motion coefficients. More specifically, the motion field coding block **140** represents the motion vector as a set of motion coefficient values which, when multiplied by the basis functions, form an approximation of the motion vector. Typically, a translational motion model having only two motion coefficients and basis functions is used, but motion models of greater complexity may also be used.

The motion coefficients are passed from motion field coding block **140** to motion compensated prediction block **150**. Motion compensated prediction block **150** also receives the best-matching region of pixel values identified by motion estimation block **130** from frame store **120**. Using the approximate representation of the motion vector generated by motion field coding block **140** and the pixel values of the best-matching region of pixels from the reference frame, motion compensated prediction block **150** generates an array of predicted pixel values for each block of the current macroblock. Each block of predicted pixel values is passed to combiner **116** where the predicted pixel values are subtracted from the actual (input) pixel values in the corresponding block of the current macroblock. In this way a set of prediction error blocks for the macroblock is obtained.

Operation of the video decoder **200**, shown in Figure 2 will now be described. The decoder **200** comprises a video multiplex decoder **270**, which receives an encoded video bit-stream **135** from the encoder **100** and demultiplexes it into its constituent parts, an inverse quantizer **210**, an inverse DCT transformer **220**, a motion compensated prediction block **240**, a frame store **250**, a combiner **230**, a control manager **260**, and an output **280**.

The control manager **260** controls the operation of the decoder **200** in response to whether an INTRA- or an INTER-coded frame is being decoded. An INTRA / INTER trigger control signal, which causes the decoder to switch between decoding modes is derived, for example, from picture type information associated with each compressed video frame received from the encoder. The INTRA / INTER trigger control signal is extracted from the encoded video bit-stream by the video multiplex decoder **270** and is passed to control manager **260** via control line **215**.

Decoding of an INTRA-coded frame is performed on a macroblock-by-macroblock basis, each macroblock being decoded substantially as soon as encoded information relating

to it is received in the video bit-stream **135**. The video multiplex decoder **270** separates the encoded information for the blocks of the macroblock from possible control information relating to the macroblock in question. The encoded information for each block of an INTRA-coded macroblock comprises variable length codewords representing the entropy coded *level* and *run* values for the non-zero quantized DCT coefficients of the block. The video multiplex decoder **270** decodes the variable length codewords using a variable length decoding method corresponding to the encoding method used in the encoder **100** and thereby recovers the *level* and *run* values. It then reconstructs the array of quantized transform coefficient values for each block of the macroblock and passes them to inverse quantizer **210**. Any control information relating to the macroblock is also decoded in the video multiplex decoder **270** using an appropriate decoding method and is passed to control manager **260**. In particular, information relating to the level of quantization applied to the transform coefficients is extracted from the encoded bit-stream by video multiplex decoder **270** and provided to control manager **260** via control line **217**. The control manager, in turn, conveys this information to inverse quantizer **210** via control line **218**. Inverse quantizer **210** inverse quantizes the quantized DCT coefficients for each block of the macroblock according to the control information and provides the now inverse quantized DCT coefficients to inverse DCT transformer **220**.

Inverse DCT transformer **220** performs an inverse DCT transform on the inverse quantized DCT coefficients for each block of the macroblock to form a decoded block of image information comprising reconstructed pixel values. The reconstructed pixel values for each block of the macroblock are passed via combiner **230** to the video output **280** of the decoder where, for example, they can be provided to a display device (not shown). The reconstructed pixel values for each block are also stored in frame store **250**. Because motion-compensated prediction is not used in the encoding/decoding of INTRA coded macroblocks control manager **260** controls combiner **230** to pass each block of pixel values as such to the video output **280** and frame store **250**. As subsequent macroblocks of the INTRA-coded frame are decoded and stored, a decoded frame is progressively assembled in the frame store **250** and thus becomes available for use as a reference frame for motion compensated prediction in connection with the decoding of subsequently received INTER-coded frames.

INTER-coded frames are also decoded macroblock by macroblock, each INTER-coded macroblock being decoded substantially as soon as encoded information relating to it is received in the bit-stream **135**. The video multiplex decoder **270** separates the encoded prediction error information for each block of an INTER-coded macroblock from encoded motion vector information and possible control information relating to the macroblock in question. As explained in the foregoing, the encoded prediction error information for each block of the macroblock comprises variable length codewords representing the entropy coded *level* and *run* values for the non-zero quantized transform coefficients of the prediction error block in question. The video multiplex decoder **270** decodes the variable length codewords using a variable length decoding method corresponding to the encoding method used in the encoder **100** and thereby recovers the *level* and *run* values. It then reconstructs an array of quantized transform coefficient values for each prediction error block and passes them to inverse quantizer **210**. Control information relating to the INTER-coded macroblock is also decoded in the video multiplex decoder **270** using an appropriate decoding method and is passed to control manager **260**. Information relating to the level of quantization applied to the transform coefficients of the prediction error blocks is extracted from the encoded bit-stream and provided to control manager **260** via control line **217**. The control manager, in turn, conveys this information to inverse quantizer **210** via control line **218**. Inverse quantizer **210** inverse quantizes the quantized DCT coefficients representing the prediction error information for each block of the macroblock according to the control information and provides the now inverse quantized DCT coefficients to inverse DCT transformer **220**. The inverse quantized DCT coefficients representing the prediction error information for each block are then inverse transformed in the inverse DCT transformer **220** to yield an array of reconstructed prediction error values for each block of the macroblock.

The encoded motion vector information associated with the macroblock is extracted from the encoded video bit-stream **135** by video multiplex decoder **270** and is decoded. The decoded motion vector information thus obtained is passed via control line **225** to motion compensated prediction block **240**, which reconstructs a motion vector for the macroblock using the same motion model as that used to encode the INTER-coded macroblock in encoder **100**. The reconstructed motion vector approximates the motion vector originally determined by motion estimation block **130** of the encoder. The motion compensated prediction block

240 of the decoder uses the reconstructed motion vector to identify the location of a region of reconstructed pixels in a prediction reference frame stored in frame store **250**. The reference frame may be, for example, a previously decoded INTRA-coded frame, or a previously decoded INTER-coded frame. In either case, the region of pixels indicated by the reconstructed motion vector is used to form a prediction for the macroblock in question. More specifically, the motion compensated prediction block **240** forms an array of pixel values for each block of the macroblock by copying corresponding pixel values from the region of pixels identified by the motion vector. The prediction, that is the blocks of pixel values derived from the reference frame, are passed from motion compensated prediction block **240** to combiner **230** where they are combined with the decoded prediction error information. In practice, the pixel values of each predicted block are added to corresponding reconstructed prediction error values output by inverse DCT transformer **220**. In this way an array of reconstructed pixel values for each block of the macroblock is obtained. The reconstructed pixel values are passed to the video output **280** of the decoder and are also stored in frame store **250**. As subsequent macroblocks of the INTER-coded frame are decoded and stored, a decoded frame is progressively assembled in the frame store **250** and thus becomes available for use as a reference frame for motion-compensated prediction of other INTER-coded frames.

As explained above, in a typical video coding system, motion compensated prediction is performed on a macroblock basis, such that a macroblock is the smallest element of a video frame that can be associated with motion information. However, the video coding recommendation currently being developed by the Joint Video Team (JVT) of ISO/IEC MPEG (Motion Pictures Expert Group) and ITU-T VCEG (Video Coding Experts Group), allows motion information to be associated with elements smaller than a macroblock. In the following description, and throughout the remainder of the text, reference will be made to the version of this video coding standard described in the document by T. Weigland: "Joint Model Number 1", Doc. JVT-A003, Joint Video Team of ISO/IEC MPEG and ITU-T VCEG, Jan. 2002, said document being included herein in its entirety. For simplicity, this version of the recommendation will be referred to as "JM1 of the JVT codec".

According to JM1 of the JVT codec, video pictures are divided into macroblocks of 16x16 pixels and are coded on a macroblock-by-macroblock basis. The coding performed

follows the basic principles described above in connection with the generic video encoder and decoder of Figures 1 and 2. However, according to JM1, motion compensated prediction of INTER coded macroblocks is performed in manner that differs from that previously described. More specifically, each of the macroblocks is assigned a "coding mode" depending on the characteristics of the macroblock and the motion in the video sequence. Seven of the coding modes are based on dividing a macroblock to be INTER coded into a number of sub-blocks, each comprising NxM pixels, and associating motion information with each of the NxM sub-blocks, not just with the macroblock as a whole. Each of the possible schemes for dividing a macroblock into NxM sub-blocks, provided by JM1 of the JVT video codec, is illustrated in Figure 4 of the accompanying drawings. As can be seen from the figure, the possible divisions are: 16x16, 8x16, 16x8, 8x8, 4x8, 8x4 and 4x4. Thus, if the coding mode assigned to a particular macroblock is, for example, the 16x8 mode, the macroblock is divided into two sub-blocks of size 16x8 pixels each and both sub-blocks is provided with its own motion information. In addition, an eighth coding mode, known as SKIP (or skip) mode, is provided. If this mode is assigned to a macroblock, this indicates that the macroblock is to be copied from the reference video frame without using motion compensated prediction.

The decision relating to the choice of coding mode for a given macroblock is typically made as part of the motion estimation process. More specifically, in a video encoder such as that illustrated in Figure 1, but implemented to allow the use of different coding modes according to JM1 of the JVT codec, the motion estimation process performed by motion estimation block **130** is repeated for each possible division of the macroblock into NxM sub-blocks and for the skip mode. The motion estimation for the skip mode is a very simple one, since no motion search is needed, but a constant zero valued vector is assigned for this mode. For the rest of the INTER modes the motion is typically estimated by performing a block matching operation for each motion block inside the macroblock. After these operations, the mode that minimizes a certain cost function is selected for the macroblock. The cost function typically combines the prediction error with number of estimated bits needed to code the macroblock and thus measures the relative efficiency of each coding mode.

Because a video encoder operating in accordance with JM1 of the JVT codec assigns a particular coding mode to each macroblock that is INTER coded, it is necessary for a corresponding video decoder to be aware of that coding mode in order for it to correctly

decode received information relating to the macroblock in question. Therefore, an indication of the coding mode assigned to each macroblock is provided in the video bit-stream transmitted from the video encoder to the video decoder. In order to minimise the amount of data required to indicate the coding modes, the coding mode for each macroblock is indicated using variable length coding. The codewords indicating the coding modes are assigned in such a way that the shortest codeword is used to represent the coding mode that is statistically most likely to occur. JM1 of the JVT codec uses a single set of so-called "Universal Variable Length Codes" (UVLC) to represent all syntax (data) elements in the video bit-stream and therefore this set of codewords is also used to represent the coding mode information for INTER coded macroblocks. The UVLC codewords used in JM1 may be written in the following compressed form, shown in Table 1 below, where the x_n terms take either the value 0 or 1:

				1				
			0	x_0	1			
		0	x_1	0	x_0	1		
	0	x_2	0	x_1	0	x_0	1	
0	x_3	0	x_2	0	x_1	0	x_0	1
.....								

Table 1:

Scheme for Generation of UVLC Codewords According to JM1 of the JVT codec

Table 2 presents the first 16 UVLC codewords, generated according to the scheme presented in Table 1.

Codeword Index	UVLC Codeword
0	1
1	001
2	011

3	00001
4	00011
5	01001
6	01011
7	0000001
8	0000011
9	0001001
10	0001011
11	0100001
12	0100011
13	0101001
14	0101011
15	000000001
....	....

Table 2:
The First 16 UVLC Codewords of JM1
Generated According to the Scheme Presented in Table 1

JM1 of the JVT codec assumes that the skip mode is statistically the most likely coding mode for a macroblock. The number of skip mode macroblocks before the next macroblock with non-SKIP mode is indicated by a single UVLC codeword using Table 2 above. The remaining coding modes are represented by UVLC codewords as shown in Table 3 below:

Codeword Index	Mode	UVLC Ccodeword
-	SKIP	Run-Length Coded
0	16 x 16	1
1	16 x 8	001
2	8 x 16	011

3	8 x 8	00001
4	8 x 4	00011
5	4 x 8	01001
6	4 x 4	01011

Table 3: Macroblock Coding Modes of JM1

As previously described, the NxM modes in the table above indicate the size of the motion blocks.

A problem with the approach adopted in JM1 of the JVT codec is that the assumption that skip mode is always the most probable is not valid. If the video sequence contains global motion (panning, zooming, etc.), skip mode is actually never used. In these cases compression efficiency is seriously degraded, especially at lower bit-rates, since the codec is forced to use high overhead Mmacroblock coding modes.

Two prior art solutions for improving the coding efficiency of motion compensated prediction in the presence of global motion are known. The first of these is known as "global motion compensation" and is used, for example, in the ISO MPEG-4 and ITU-T H.263+ video coding standards. The second method is described in the document entitled " Global Motion Vector Coding" by Shijun Sun and Shawmin Lei, Doc. VCEG-O20, ITU-T Video Coding Experts Group (VCEG) Meeting, Pattaya, Thailand 4 - 7 December 2001, included herein by reference. The basic concepts of these two methods will now be briefly described.

As described in Annex P "Reference Picture Resampling" of International Telecommunications Union ITU-T Recommendation H.263 "Video Coding for Low Bit-Rate Communication", February 1998, the idea behind global motion compensation is to generate a reference frame for motion compensation that cancels the effects of global motion. In order to do this, complex operations are needed in the decoder to warp the reference frame into a more usable form. Furthermore, additional information has to be sent to the decoder to guide the building of new reference frames for global motion compensation. More specifically, the global motion compensation scheme employed in the H.263 video coding standard uses a resampling process to generate a warped version of the reference frame for use in motion-compensated prediction of the current picture. This warped version of the reference frame

may include alterations in the shape, size, and location with respect to the current picture. The resampling process is defined in terms of a mapping between the four corners of the current picture and the corresponding four corners of the reference frame. Assuming that the luminance component of the current picture has a horizontal size H and vertical size V, the mapping is performed by defining four conceptual motion vectors $\underline{v}^{00}$, $\underline{v}^{H0}$, $\underline{v}^{0V}$, and $\underline{v}^{HV}$, each conceptual motion vector describing how to move one of the four corners of the current picture in such a way as to map it onto the corresponding corner of the reference frame. This operation is illustrated in Figure 5. Motion compensated prediction for a macroblock of the current picture is then performed using block-matching with respect to the warped reference frame. This complicates the block matching process, as the value of each pixel of the warped reference frame used in the block matching process must be generated by mapping pixel values in the original (non-warped) reference frame into the co-ordinates of the warped reference frame. This is done using bilinear interpolation, which is a computationally intensive operation. The reader is referred to Annex P of the H.263 video coding standard for further details of the bilinear interpolation process used to generate the pixel values of the warped reference frame.

Global motion vector coding, as described in document VCEG-O20, referred to above, is a simplified version of global motion compensation. The reference frame is used as it is, but additional information is transmitted to describe the global motion and additional macroblock modes are used to indicate when global motion vectors are used. This approach is less complex than the global motion compensation technique just described, but there is additional encoder complexity associated with it. Namely, the encoder must perform extra motion estimation operations to find the global motion parameters and it also needs to evaluate more macroblock modes to find the optimal one. Moreover, the amount of extra global motion information that needs to be transmitted becomes large for small resolution video.

In view of the preceding discussion, it should be appreciated that there exists a significant unresolved technical problem relating to the coding of a digital video sequence in the presence of global motion, such as translation, panning or zooming of the camera. In particular, each of the three previously described prior art video coding solutions has some

form of technical shortcoming. JM1 of the JVT codec, for example, has no special provision for taking account of global motion in video sequences. Therefore, when such motion is present it causes the video encoder to select macroblock coding modes that explicitly model the motion. This leads to a significant degradation in coding efficiency, as the global motion component is encoded in every INTER coded macroblock (or sub-block). The technique of global motion compensation (as provided by Annex P of the H.263 video coding standard) takes global motion into account by warping reference frames used in motion compensated prediction and therefore provides improved coding efficiency compared with a system in which no special measures are taken to code global motion. However, the warping process is computationally complex and additional information must be transmitted in the encoded video bit-stream to enable correct decoding of the video sequence. Although the related technique of global motion vector coding is computationally less demanding than global motion compensation, it does involve a certain increase in encoder complexity and additional information must be still transmitted in the video bit-stream to enable correct decoding of the video data.

It is therefore one purpose of the present invention to combine the simplicity of local motion compensation with the coding efficiency of global motion compensation to yield a video coding system with significantly improved compression performance and a negligible increase in complexity.

Summary of the Invention

In order to overcome, or at least mitigate to a large extent the problems associated with the coding of global motion in prior art video coding systems, the present invention is based on a redefinition of the skip mode concept used in JM1 of the JVT codec. The method according to the invention not only provides an improvement in coding efficiency in the presence of global motion (i.e. motion affecting the entire area of video frame), but also enables regional motion to be represented in an efficient manner.

According to the invention, the skip mode concept is redefined in such a way that a macroblock assigned to skip mode is either associated with a zero (non-active) motion vector, in which case it is treated in the same way as a conventional skip mode macroblock and copied directly from the reference frame, or it is associated with a non-zero (active) motion

vector. The decision as to whether a macroblock should be associated with a zero or non-zero motion vector is made by analysing the motion of other macroblocks or sub-blocks in a region surrounding the macroblock to be coded. If it is found that the surrounding region exhibits a certain type of motion, a non-zero motion vector representative of that motion is generated and associated with the current macroblock. In particular, the continuity, velocity or deviation of motion in the surrounding macroblocks or sub-blocks can be analyzed. For example, if the motion in the surrounding region exhibits a certain level of continuity, a certain common velocity, or a particular form of divergence, a motion vector representative of that motion can be assigned to the current macroblock to be coded. On the other hand, if the region surrounding the current macroblock does not exhibit such continuity, common velocity or divergence and has an insignificant level of motion, the macroblock to be coded is assigned a zero motion vector, causing it to be copied directly from the reference frame, just as if it were a conventional SKIP mode macroblock. In this way, according to the invention, SKIP mode macroblocks can adapt to the motion in the region surrounding them, enabling global or regional motion to taken account of in an efficient manner.

In an advantageous embodiment of the invention, the surrounding macroblocks or sub-blocks whose motion is analysed are previously encoded macroblocks neighboring the macroblock to be coded. This ensures that motion information relating to the region the surrounding a macroblock is available in the encoder (decoder) when a current macroblock is being encoded (decoded) and can be used directly to determine the motion vector to be assigned to the current macroblock. This approach enables the motion analysis of the surrounding region performed in the encoder to be duplicated exactly in the decoder. This, in turn, means that according to the invention, no additional information must be sent to the decoder in order to model global or regional motion.

As will become apparent from the detailed description of the invention presented below, redefinition of the skip mode concept as proposed by the present invention has significant technical advantages compared with the previously described prior art video coding methods. In particular, the method according to the invention enables global and regional motion within a video sequence to be taken account of in an efficient manner without the need for complex warping of the reference frame or any other computationally demanding operations. Furthermore, in contrast to both the global motion compensation and

global motion vector coding methods previously described, no additional information must be transmitted in the video bit-stream to enable correct decoding of the video data. Additionally, a minimal amount of modification is required to incorporate the method according to the invention into existing video coding systems that employ the concept of skip mode macroblocks.

These and other features, aspects, and advantages of embodiments of the present invention will become apparent with reference to the following detailed description in conjunction with the accompanying drawings. It is to be understood, however, that the drawings are designed solely for the purposes of illustration and not as a definition of the limits of the invention.

Brief Description of the Drawings

Figure 1 is a schematic block diagram of a generic video encoder according to prior art.

Figure 2 is a schematic block diagram of a generic video decoder according to prior art and corresponding to the encoder shown in Figure 1.

Figure 3 illustrates the formation of a macroblock according to prior art.

Figure 4 shows the 7 possible divisions of macroblocks into blocks according to JM1 of the JVT video codec.

Figure 5 illustrates the generation of conceptual motion vectors for mapping the corners of a current picture to those of a reference picture in the global motion compensation scheme according to H.263 Annex P.

Figure 6 is a schematic block diagram of a video encoder according to an embodiment of the invention.

Figure 7 is a schematic block diagram of a video decoder according to an embodiment of the invention and corresponding to the encoder shown in Figure 6.

Figure 8 illustrates encoding and decoding blocks for skip mode macroblocks in an encoder or decoder according an embodiment of the invention.

Figure 9 shows an example of macroblock partitioning, motion in macroblocks surrounding a macroblock to be coded or decoded, and the generated skip mode motion

vector for the macroblock (the darkened macroblock in the figure) according to an embodiment of the invention.

Figure 10 is a schematic block diagram of a multimedia communications terminal in which the method according to the invention may be implemented.

Best Mode for Carrying out the Invention

Exemplary embodiments of the invention will now be described in detail with particular reference to Figures 6 to 10.

According to the invention, skip (or SKIP) mode macroblocks in a video coding system adapt to the motion of surrounding image segments. If active motion is detected around a macroblock to be coded/decoded, motion parameters conforming to the motion are generated and the macroblock is motion compensated. In this way, no additional information needs to be transmitted from the encoder to the decoder.

Figure 6 is a schematic block diagram of a video encoder **600** implemented according to an embodiment of the invention. When encoding frames of a digital video sequence, encoder **600** operates in a manner similar to that previously described in connection with the prior art video encoder of Figure 1 to generate INTRA-coded and INTER-coded compressed video frames. The structure of the video encoder shown in Figure 6 is substantially identical to that of the prior art video encoder shown in Figure 1, with appropriate modifications to the motion estimation part necessary to implement the video encoding method according to the invention. All parts of the video encoder which implement functions and operate in a manner identical to the previously described prior art video encoder are identified with identical reference numbers.

As the present invention relates to the encoding of video frames in INTER-coded format and more particularly to details of the motion-compensated prediction performed as part of the INTER coding process, description of encoder **600** in INTRA-coding mode will be omitted and the following sections will concentrate on the operations performed by the encoder in INTER-coding mode.

In INTER-coding mode, the video encoder's control manager **160** operates switch **102** to receive its input from line **117**, which comprises the output of combiner **116**. The combiner **116** receives the video input signal macroblock by macroblock from input **101**. As combiner

116 receives the blocks of luminance and chrominance values which make up the macroblock, it forms corresponding blocks of prediction error information, representing the difference between the block in question and its prediction, produced in motion compensated prediction block **650**.

The prediction error information for each block of the macroblock is passed to DCT transformation block **104**, which performs a two-dimensional discrete cosine transform on each block of prediction error values to produce a two-dimensional array of DCT transform coefficients for each block. These are passed to quantizer **106** where they are quantized using a quantization parameter QP. Selection of the quantization parameter QP is controlled by the control manager **160** via control line **115**.

The quantized DCT coefficients representing the prediction error information for each block of the macroblock are then passed from quantizer **106** to video multiplex coder **170**, via line **125**. The video multiplex coder **170** orders the transform coefficients for each prediction error block using a zigzag scanning procedure, represents each non-zero valued quantized coefficient as a *run-level* pair and compresses the *run-level* pairs using entropy coding. Video multiplex coder **170** also receives motion vector information from motion field coding block **640** via line **126** and control information from control manager **160**. It entropy codes the motion vector information and control information and forms a single bit-stream of coded image information, **135** comprising the entropy coded motion vector, prediction error and control information.

The quantized DCT coefficients representing the prediction error information for each block of the macroblock are also passed from quantizer **106** to inverse quantizer **108**. Here they are inverse quantized and the resulting blocks of inverse quantized DCT coefficients are applied to inverse DCT transform block **110**, where they undergo inverse DCT transformation to produce locally decoded blocks of prediction error values. The locally decoded blocks of prediction error values are then input to combiner **112**. In INTER-coding mode, switch **114** is set so that the combiner **112** also receives predicted pixel values for each block of the macroblock, generated by motion-compensated prediction block **650**. The combiner **112** combines each of the locally decoded blocks of prediction error values with a corresponding block of predicted pixel values to produce reconstructed image blocks and stores them in frame store **120**.

As subsequent macroblocks of the video signal are received from the video source and undergo the previously described encoding and decoding steps in blocks **104, 106, 108, 110, 112**, a decoded version of the frame is built up in frame store **120**. When the last macroblock of the frame has been processed, the frame store **120** contains a completely decoded frame, available for use as a motion prediction reference frame in encoding a subsequently received video frame in INTER-coded format.

The details of the motion-compensated prediction performed by video encoder **600** will now be described in detail.

Encoder **600** performs motion-compensated prediction in a manner similar to the previously described JVT codec. In other words, it is adapted to assign a coding mode to each INTER-coded macroblock depending on the characteristics of the macroblock and the motion in the video sequence being coded. When examining which coding mode to assign to particular macroblock, motion estimation block **630** performs a motion estimation operation for each coding mode in turn. Motion estimation block **630** receives the blocks of luminance and chrominance values which make up the macroblock to be coded for use in motion estimation via line **128** (see Figure 6). It then selects each of the possible coding modes one after the other, in turn, and performs motion estimation in order to identify a best match for the macroblock in the reference frame, on the basis of the selected coding mode and the pixel values of the macroblock to be coded. (The best match will comprise one or more best-matching regions of pixel values, depending on the coding mode). Each best-match is associated with an overall cost value, for example, a linear combination of the sum of absolute differences between the pixel values in the macroblock under examination and the best matching region in the reference frame, and an estimated number of bits required to code the mode and represent motion vectors. Once a best match has been obtained for each coding mode, motion estimation block **630** selects that coding mode which yields the smallest overall cost value as the coding mode for the current macroblock.

According to the invention, the coding modes used by encoder **600** correspond to those provided by JM1 of the JVT codec (shown in Table 3), with the exception that the SKIP mode is redefined to allow representation of global and regional motion. More specifically, the SKIP mode is modified in such a way that a zero (non-active) motion vector or a non-zero (active) motion vector is associated with each skip mode macroblock,

depending on the characteristics of the motion in image segments surrounding the macroblock in question. In the following this type of motion vector will be referred to as a "skip mode motion vector".

When examining skip mode as part of the previously described motion estimation process performed in turn for each coding mode, the encoder first determines whether a zero or a non-zero skip mode motion vector should be used. To do this, the encoder is arranged to analyze the motion of image segments (e.g. macroblocks and / or sub-blocks) surrounding the macroblock to be coded. If it determines that the surrounding region exhibits a certain type of motion, for example it has characteristics indicative of global or regional motion, it generates a non-zero valued skip mode motion vector representative of the motion. On the other hand, if the encoder determines that the region surrounding the current macroblock does not exhibit global or regional motion, but instead has an insignificant level of motion, it generates a zero valued skip mode motion vector. In other words, if the encoder determines that the motion in the region surrounding the current macroblock has a global characteristic, skip mode coding is adapted to take account of this (by generating an associated non-zero valued skip mode motion vector representative of the motion). Alternatively if no such motion is present, a zero valued motion vector is generated causing the skip mode as modified by the invention to operate in a conventional manner i.e. a zero valued skip mode motion vector causes a macroblock to be copied directly from the reference frame.

Having performed motion estimation operations for each of the available coding modes, including skip mode as modified according to the invention, encoder 600 determines which coding mode yields the smallest overall cost value and selects that mode as the coding mode for the macroblock in question. An indication of the finally selected coding mode, for example a variable length codeword selected from the set of codewords presented in Table 3, is associated with the macroblock and included in the video bit-stream **635**. This enables a corresponding decoder to identify the coding mode for the macroblock and correctly reconstruct the macroblock using the correct form of motion-compensated prediction.

The analysis of motion in a region surrounding a macroblock to be coded to determine whether a zero valued or non-zero valued skip mode motion vector should be used will now be considered in further detail with reference to Figure 8 of the accompanying drawings. Figure 8 illustrates the functional elements of the motion estimation block **630** associated

with generating skip mode motion vectors. These include motion information memory **801**, surrounding motion analysis block **802**, active motion parameter generation block **803** and zero motion parameter generation block **804**.

The decision whether to generate a zero valued skip mode motion vector or a non-zero valued skip mode motion vector is made by surrounding motion analysis block **802**. The decision is made by analysing and classifying the motion of macroblocks or sub-blocks in a predefined region surrounding the macroblock to be coded using a predetermined analysis scheme. In order to perform the analysis, surrounding motion analysis block **802** retrieves motion information relating to the macroblocks and / or sub-blocks in the surrounding region from motion information memory **801**. Depending on the specific details of the implementation, surrounding motion analysis block may be arranged to analyze the continuity, velocity or deviation of motion in the surrounding macroblocks or sub-blocks. For example, if the motion in the surrounding region exhibits a certain level of continuity, a certain common velocity (as depicted in Figure 9, for example), or a particular form of divergence, this may suggest that some form of global or regional motion is present. As a consequence surrounding motion analysis block concludes that "active motion" is present in the surrounding region and a non-zero valued skip mode motion vector should be used. On the other hand, if the region surrounding the current macroblock does not exhibit such continuity, common velocity or divergence and has a generally insignificant level of motion, the surrounding motion analysis block concludes that "non-active motion" is present in the surrounding region and consequently a zero valued skip mode motion vector should be used.

As shown in Figure 8, if the surrounding motion analysis block determines that "active motion" is present in the surrounding region, it sends an indication to that effect to active motion parameter generation block **803**, which forms a non-zero valued skip mode motion vector representative of the motion in the surrounding region. To do this active motion parameter generation block **803** retrieves motion information relating to the surrounding macroblocks and / or sub-blocks from motion information memory **801**. Alternatively, this information may be passed to the active motion parameter generation block by surrounding motion analysis block **802**. If surrounding motion analysis block determines that "non-active motion" is present in the surrounding region, it sends a

corresponding indication to zero motion parameter generation block **804**, which forms a zero valued skip mode motion vector.

In a particularly advantageous embodiment of the invention, the surrounding region of macroblocks or sub-blocks analyzed by the surrounding motion analysis block comprises previously encoded macroblocks neighboring the macroblock to be coded (Figure 9). In this case, the analysis and classification of motion in the surrounding region performed in the encoder can be duplicated exactly in the decoder. This, in turn, means that according to the invention, no additional information must be sent to the decoder in order to model global or regional motion.

In an alternative embodiment of the invention the coding modes of already coded macroblocks are taken into account when deciding whether to use a zero valued or non-zero valued skip mode motion vector. For example, if the surrounding motion analysis block determines that there is one or more stationary neighboring macroblock, a zero valued skip mode motion vector is used.

In a first preferred embodiment of the invention surrounding motion analysis block **802** classifies the motion in the region surrounding the macroblock according to the following three step procedure. Firstly, surrounding motion analysis block retrieves motion information for the macroblocks or sub-blocks surrounding the macroblock to be coded (i.e. previously encoded macroblocks neighboring the macroblock to be coded, as shown in Figure 9) and generates a median motion vector prediction for the macroblock. The median motion vector prediction is formed, for example, in a manner analogous to that used in motion vector prediction according to JM1 of the JVT codec (see T. Weigland: "Joint Model Number 1", Doc. JVT-A003, Joint Video Team of ISO/IEC MPEG and ITU-T VCEG, Jan. 2002). Next surrounding motion analysis block determines if any of the resulting motion vector components has an absolute value larger than a certain threshold value (for example half a pixel). If this condition is fulfilled, the motion is classified as "active motion", otherwise it is classified as "non-active motion". Finally, depending on the classification result, surrounding motion analysis block **802**, sends an indication to either the active motion parameter generation block **803** or the zero motion parameter generation block **804** to in order to generate the appropriate skip mode motion parameters.

Implementation of the surrounding motion analysis block according to the first preferred embodiment of the invention is particularly advantageous for two reasons. Firstly, in a typical video codec, such as the JVT codec, a median predictor is used to predict motion vectors of square image blocks. According to the first preferred embodiment, this same predictor is used in the surrounding motion analysis block and active motion parameter generation block to analyze motion in the region surrounding a macroblock to be coded and to generate motion parameters for SKIP mode macroblocks. In this way the invention can be implemented with minimal effect on the total implementation complexity of the video codec. Secondly, because the surrounding motion analysis block **802** classifies the motion in the surrounding region by generating and analyzing a median motion vector, active motion parameter generation block **803** can simply pass the median motion parameters, already generated in the surrounding motion analysis block, to the motion compensation block. This also minimizes the implementation complexity, since there is no need to generate additional motion parameters.

In a second preferred embodiment of the invention the surrounding motion analysis block analyses the motion in vicinity of the macroblock to be coded and classifies it as either "active motion" or "non-active motion". In the case of "active motion" the active motion parameter generation block is activated and in the case of "non-active motion" the zero motion parameter generation block is activated. In this embodiment the classification to the "non-active motion" category takes place if either or both of the two conditions below are true, otherwise the motion is classified as "active motion":

Condition 1: The macroblock immediately above or the macroblock immediately to the left of the macroblock under consideration is not available (that is, is out of the picture or belongs to a different slice).

Condition 2: The macroblock or block immediately above, or the macroblock or block immediately to the left that are used in motion vector prediction for the 16x16 INTER mode has a zero motion vector and uses the latest picture as reference in motion compensation.

Operation of a video decoder **700** according to an embodiment of the invention will now be described with reference to Figure 7. The structure of the video decoder illustrated in Figure 7 is substantially identical to that of the prior art video decoder shown in Figure 2, with appropriate modifications to those parts of the decoder that perform motion estimation

operations. All parts of the video decoder which implement functions and operate in a manner identical to the previously described prior art video decoder are identified with identical reference numbers. It is further assumed that the video decoder of Figure 7 corresponds to the encoder described in connection with Figure 6 and is therefore capable of receiving and decoding the bit-stream **635** transmitted by encoder **600**. Furthermore, as the present invention affects the decoding of video frames in INTER-coded format, description of the operations performed by decoder **700** in connection with the decoding of INTRA-coded frames will be omitted.

INTER-coded frames are decoded macroblock by macroblock, each INTER-coded macroblock being decoded substantially as soon as encoded information relating to it is received in the bit-stream **635**. Depending on the coding mode, the compressed video data included in the bit-stream for an INTER-coded macroblock may comprise a combination of VLC encoded prediction error information for each block, motion vector information for the macroblock (or sub-blocks) and encoded control information including an indication of the coding mode used to encode the macroblock in question. If a macroblock is encoded in skip mode, no prediction error or motion vector information relating to the macroblock is included in the bit-stream.

Video multiplex decoder **270** receives the video bit-stream **635** and separates control information, including an indication of the coding mode of the macroblock from any encoded prediction error and / or motion vector information that may be present.

As explained earlier, prediction error information is encoded as variable length codewords representative of entropy coded *level* and *run* values. If prediction error information is provided for the current macroblock, the video multiplex decoder **270** recovers the *level* and *run* values by decoding the variable length codewords using a variable length decoding method corresponding to the encoding method used in encoder **600**. It then reconstructs an array of quantized DCT transform coefficient values for each prediction error block and passes them to inverse quantizer **210** where they are inverse quantized. The inverse quantized DCT coefficients are then inverse transformed in the inverse DCT transformer **220** to yield an array of reconstructed prediction error values for each block of the macroblock.

Both the coding mode indication and encoded motion vector information (if any) associated with the macroblock are decoded in the video multiplex decoder and are passed

via control line **225** to motion compensated prediction block **740**. Motion compensated prediction block **740** uses the coding mode indication and motion vector information (if any) to form a prediction for the macroblock in question. More specifically, the motion compensated prediction block **740** forms an array of pixel values for each block of the macroblock by copying corresponding pixel values from a region (or regions) of pixels in a reference frame. The prediction, that is the blocks of pixel values derived from the reference frame, are passed from motion compensated prediction block **740** to combiner **230** where they are combined with the decoded prediction error information (if any). In this way an array of reconstructed pixel values for each block of the macroblock is obtained.

The reconstructed pixel values are passed to the video output **280** of the decoder and are also stored in frame store **250**. Consequently, as subsequent macroblocks of the INTER-coded frame are decoded and stored, a decoded frame is progressively assembled in the frame store **250** and thus becomes available for use as a reference frame for motion-compensated prediction of other INTER-coded frames.

According to the invention, the motion compensated prediction block **740** of decoder **700** comprises a motion information memory block **801**, a surrounding motion analysis block 802, an active motion parameter generation block **803** and a zero motion parameter generation block **804** analogous to those provided in encoder **600**. These functional blocks are used to determine whether a macroblock encoded in skip mode should be associated with a zero valued or a non-zero valued skip mode motion vector. More specifically, when it is determined that a macroblock to be decoded was encoded in skip mode, surrounding motion analysis block **802** analyses and classifies the motion of previously decoded macroblocks and / or sub-blocks in a predefined region surrounding the macroblock to be decoded in a manner exactly corresponding to that used in encoder **600**. As a result of the analysis, the macroblock in question is either associated with a non-zero valued skip mode motion vector or a zero valued skip mode motion vector. This motion vector is then used to form a prediction for the macroblock. If the macroblock is associated with a zero valued skip mode motion vector, it is reconstructed by simply copying pixel values from a corresponding location in the reference frame. If, on the other hand, it is associated with a non-zero valued motion vector, a region of pixel values indicated by the non-zero motion vector is used to generate the pixel values for the macroblock.

It should be appreciated that by modifying the skip mode concept in the manner proposed by the invention and performing surrounding motion analysis in the decoder, it is possible to take account of global or region motion in a video sequence without requiring explicit information about such motion to be provided in video bit-stream.

A terminal device comprising video encoding and decoding equipment which may be adapted to operate in accordance with the present invention will now be described. Figure 10 of the accompanying drawings illustrates a multimedia terminal **80** implemented according to ITU-T recommendation H.324. The terminal can be regarded as a multimedia transceiver device. It includes elements that capture, encode and multiplex multimedia data streams for transmission via a communications network, as well as elements that receive, de-multiplex, decode and display received multimedia content. ITU-T recommendation H.324 defines the overall operation of the terminal and refers to other recommendations that govern the operation of its various constituent parts. This kind of multimedia terminal can be used in real-time applications such as conversational videotelephony, or non real-time applications such as the retrieval and / or streaming of video clips, for example from a multimedia content server in the Internet.

In the context of the present invention, it should be appreciated that the H.324 terminal shown in Figure 10 is only one of a number of alternative multimedia terminal implementations suited to application of the inventive method. It should also be noted that a number of alternatives exist relating to the location and implementation of the terminal equipment. As illustrated in Figure 10, the multimedia terminal may be located in communications equipment connected to a fixed line telephone network such as an analogue PSTN (Public Switched Telephone Network). In this case the multimedia terminal is equipped with a modem **91**, compliant with ITU-T recommendations V.8, V.34 and optionally V.8bis. Alternatively, the multimedia terminal may be connected to an external modem. The modem enables conversion of the multiplexed digital data and control signals produced by the multimedia terminal into an analogue form suitable for transmission over the PSTN. It further enables the multimedia terminal to receive data and control signals in analogue form from the PSTN and to convert them into a digital data stream that can be demultiplexed and processed in an appropriate manner by the terminal.

An H.324 multimedia terminal may also be implemented in such a way that it can be connected directly to a digital fixed line network, such as an ISDN (Integrated Services Digital Network). In this case the modem **91** is replaced with an ISDN user-network interface. In Figure 10, this ISDN user-network interface is represented by alternative block 92.

H.324 multimedia terminals may also be adapted for use in mobile communication applications. If used with a wireless communication link, the modem **91** can be replaced with any appropriate wireless interface, as represented by alternative block **93** in Figure 10. For example, an H.324/M multimedia terminal can include a radio transceiver enabling connection to the current 2nd generation GSM mobile telephone network, or the proposed 3rd generation UMTS (Universal Mobile Telephone System).

It should be noted that in multimedia terminals designed for two-way communication, that is for transmission and reception of video data, it is advantageous to provide both a video encoder and video decoder implemented according to the present invention. Such an encoder and decoder pair is often implemented as a single combined functional unit, referred to as a "codec".

A typical H.324 multimedia terminal will now be described in further detail with reference to Figure 10.

The multimedia terminal **80** includes a variety of elements referred to as "terminal equipment". This includes video, audio and telematic devices, denoted generically by reference numbers **81, 82** and **83**, respectively. The video equipment **81** may include, for example, a video camera for capturing video images, a monitor for displaying received video content and optional video processing equipment. The audio equipment **82** typically includes a microphone, for example for capturing spoken messages, and a loudspeaker for reproducing received audio content. The audio equipment may also include additional audio processing units. The telematic equipment **83**, may include a data terminal, keyboard, electronic whiteboard or a still image transceiver, such as a fax unit.

The video equipment **81** is coupled to a video codec **85**. The video codec **85** comprises a video encoder and a corresponding video decoder, both implemented according to the invention. Such an encoder and a decoder will be described in the following. The video codec **85** is responsible for encoding captured video data in an appropriate form for further

transmission over a communications link and decoding compressed video content received from the communications network. In the example illustrated in Figure 10, the video codec is implemented according to JM1 of the JVT codec, with appropriate modifications to implement the modified SKIP mode concept according to the invention in both the encoder and the decoder of the video codec.

The terminal's audio equipment is coupled to an audio codec, denoted in Figure 10 by reference number **86**. Like the video codec, the audio codec comprises an encoder/decoder pair. It converts audio data captured by the terminal's audio equipment into a form suitable for transmission over the communications link and transforms encoded audio data received from the network back into a form suitable for reproduction, for example on the terminal's loudspeaker. The output of the audio codec is passed to a delay block **87**. This compensates for the delays introduced by the video coding process and thus ensures synchronisation of audio and video content.

The system control block **84** of the multimedia terminal controls end-to-network signalling using an appropriate control protocol (signalling block **88**) to establish a common mode of operation between a transmitting and a receiving terminal. The signalling block **88** exchanges information about the encoding and decoding capabilities of the transmitting and receiving terminals and can be used to enable the various coding modes of the video encoder. The system control block **84** also controls the use of data encryption. Information regarding the type of encryption to be used in data transmission is passed from encryption block **89** to the multiplexer/demultiplexer (MUX/DMUX unit) **90**.

During data transmission from the multimedia terminal, the MUX/DMUX unit **90** combines encoded and synchronised video and audio streams with data input from the telematic equipment **83** and possible control data, to form a single bit-stream. Information concerning the type of data encryption (if any) to be applied to the bit-stream, provided by encryption block **89**, is used to select an encryption mode. Correspondingly, when a multiplexed and possibly encrypted multimedia bit-stream is being received, MUX/DMUX unit 90 is responsible for decrypting the bit-stream, dividing it into its constituent multimedia components and passing those components to the appropriate codec(s) and/or terminal equipment for decoding and reproduction.

If the multimedia terminal **80** is a mobile terminal, that is, if it is equipped with a radio transceiver **93**, it will be understood by those skilled in the art that it may also comprise additional elements. In one embodiment it comprises a user interface having a display and a keyboard, which enables operation of the multimedia terminal **80** by a user, a central processing unit, such as a microprocessor, which controls the blocks responsible for different functions of the multimedia terminal, a random access memory RAM, a read only memory ROM, and a digital camera. The microprocessor's operating instructions, that is program code corresponding to the basic functions of the multimedia terminal **80**, is stored in the read-only memory ROM and can be executed as required by the microprocessor, for example under control of the user. In accordance with the program code, the microprocessor uses the radio transceiver **93** to form a connection with a mobile communication network, enabling the multimedia terminal **80** to transmit information to and receive information from the mobile communication network over a radio path.

The microprocessor monitors the state of the user interface and controls the digital camera. In response to a user command, the microprocessor instructs the camera to record digital images into the RAM. Once an image or digital video sequence is captured, or alternatively during the capturing process, the microprocessor segments the image into image segments (for example macroblocks) and uses the encoder to perform motion compensated encoding of the segments in order to generate a compressed image sequence, as explained in the foregoing description. A user may command the multimedia terminal **80** to display the captured images on its display or to send the compressed video sequence using the radio transceiver **93** to another multimedia terminal, a video telephone connected to a fixed line network (PSTN) or some other telecommunications device. In a preferred embodiment, transmission of image data is started as soon as the first segment is encoded so that the recipient can start a corresponding decoding process with a minimum delay.

Although described in the context of particular embodiments, it will be apparent to those skilled in the art that a number of modifications and various changes to these teachings may occur. Thus, while the invention has been particularly shown and described with respect to one or more preferred embodiments thereof, it will be understood by those skilled in the art that certain modifications or changes may be made therein without departing from the scope and spirit of the invention as set forth above.

In particular, according to an alternative embodiment of the invention, surrounding motion analysis block **802** is adapted to classify the motion of a surrounding region into more than two motion classes. For example, one meaningful classification involving three classes of motion would be "continuous motion", "active motion" and "non-active motion". In this way special motion parameters for the typical case of continuous motion can be generated.

In another alternative embodiment of the invention, the surrounding motion analysis block is removed and active motion parameter generation block is activated for all the skip mode macroblocks.

According to a further alternative embodiment Instead of using the surrounding motion analysis block to indicate the classification information, the indication is provided by other means (for example as side information in macroblock, slice, picture or sequence levels).

In yet another alternative embodiment, the surrounding motion analysis block may be temporarily disabled or enabled with such means.

In another alternative implementation, the macroblock mode table is rehashed depending on the output of the surrounding motion analysis block to give higher priority to more likely modes. In a related embodiment, the macroblock mode table is completely regenerated depending on the output of the surrounding motion analysis block, for example, by removing the skip.

It should also be appreciated that active motion parameters generation block 803 can be implemented in various ways. In particular embodiments of the invention it is adapted to generate the motion parameters, for example, based on the continuance, velocity or deviation of the surrounding motion. Additional side information can also be sent to guide the generation of motion parameters. In an alternative embodiment the active motion parameter generation block is adapted to output multiple motion vectors to be used in different parts of the macroblock.

The invention can also be used to generate motion compensated prediction for other Macroblock modes in addition to or instead of the SKIP mode. It is also not limited by the macroblock structure but can be used in any segmentation based video coding system.

What is claimed is:

1. A method of motion compensated prediction for use in encoding of a digital video sequence, said digital video sequence comprising a number of frames, said method comprising the steps of:

assigning a coding mode to a segment of a first frame of the sequence to be encoded using motion compensated prediction with respect to a second frame of the sequence, said coding mode being one of a set of possible coding modes including a skip mode, wherein said skip mode, when assigned to said segment of the first frame, indicates either

(i) that the segment has an insignificant level of motion, in which case, forming a prediction for the segment by copying directly from a corresponding region of the second frame, or

(ii) that the segment has a motion characteristic of global or regional motion in the video sequence, in which case, forming a prediction for the segment by motion compensated prediction with respect to the second frame using motion information representative of said global or regional motion.

2. A method according to claim 1, further comprising the step of performing an analysis of motion in a region of the first frame surrounding the segment to be encoded in order to determine a characteristic of the motion in said region.

3. A method according to claim 3, wherein said region of the first frame surrounding the segment to be encoded comprises previously encoded segments of the first frame.

4. A method according to claim 2, wherein if it is determined that the motion in said region of the first frame surrounding the segment to be encoded has an insignificant level, the skip mode is assigned as the coding mode of the segment and motion information indicative of zero motion is associated with the segment.

5. A method according to claim 2, wherein if it is determined that the motion in said region of the first frame surrounding the segment to be encoded is characteristic of global or

regional motion, the skip mode is assigned as the coding mode of the segment and motion information indicative of the global or regional motion in the surrounding region is associated with the segment.

6. A method according to claim 2 wherein said analysis comprises examining said region of the first frame surrounding said segment to be encoded in order to identify at least one of the following types of motion: continuous motion, motion having a common velocity, and motion having a certain deviation.

7. A method according to claim 2, wherein if a segment of the first frame in the region of the first frame surrounding the segment to be encoded has no motion, the skip mode is assigned as the coding mode of the segment and motion information indicative of zero motion is associated with the segment.

8. A method of motion compensated prediction for use in decoding of an encoded digital video sequence, said digital video sequence comprising a number of frames, said method comprising the steps of:

receiving an indication of a coding mode assigned to a segment of a first frame of the sequence decoded using motion compensated prediction with respect to a second frame of the sequence, said coding mode being one of a set of possible coding modes including a skip mode; and

determining, when said skip mode is indicated as the coding mode assigned to said segment of the first frame,

(i) whether said skip mode indicates that the segment has an insignificant level of motion, in which case, motion compensated prediction for the segment is performed by copying directly from a corresponding region of the second frame, or

(ii) whether said skip mode indicates that the segment has motion characteristic of global or regional motion in the video sequence, in which case motion compensated prediction for the segment is performed with respect to the second frame using motion information representative of said global or regional motion.

9. A method according to claim 8, wherein the determining step comprises:

performing an analysis of motion in a previously decoded region of the first frame surrounding the segment to be decoded in order to determine a characteristic of the motion in said region.

10. A method according to claim 9, wherein said analysis comprises examining the previously decoded region of the first frame surrounding said segment to be decoded in order to identify at least one of the following types of motion: continuous motion, motion having a common velocity, and motion having a certain deviation, wherein if said at least one type of motion is identified in said surrounding region, it is determined that the skip mode indicates that the segment to be decoded has motion characteristic of global or regional motion in the video sequence .

11. A method according to claim 9, wherein if a segment of the first frame in the previously decoded region of the first frame surrounding the segment to be encoded has no motion, it is determined that the skip mode indicates that the segment to be decoded has an insignificant level of motion.

12. A video encoder arranged to encode a digital video sequence using motion compensated prediction, said digital video sequence comprising a number of frames, said encoder comprising:

means for assigning a coding mode to a segment of a first frame of the sequence to be encoded using motion compensated prediction with respect to a second frame of the sequence, wherein said coding mode is one of a set of possible modes including a skip mode; and

means for forming a prediction for the segment, wherein said skip mode, when assigned to said segment of the first frame indicates either

(i) that the segment has an insignificant level of motion, in which case, said forming means forms a prediction for the segment by copying directly from a corresponding region of the second frame, or

(ii) that the segment has motion characteristic of global or regional motion in the video sequence, in which case, said forming means forms a prediction for the segment with respect to the second frame using motion information representative of said global or regional motion.

13. An encoder according to claim 12, further comprising means for analyzing motion in a region of the first frame surrounding the segment to be encoded in order to determine a characteristic of the motion in said region.

14. An encoder according to claim 13, wherein said analyzing means is arranged to analyze motion in previously encoded segments of the first frame.

15. An encoder according to claim 13, wherein if said analyzing means determines that the motion in said region has an insignificant level, the encoder is arranged to assign the skip mode as the coding mode of the segment and to associate motion information indicative of zero motion with the segment to be encoded.

16. An encoder according to claim 13, wherein said analyzing means determines that the motion in said region of the first frame surrounding the segment to be encoded is characteristic of global or regional motion, the encoder is arranged to assign the skip mode as the coding mode of the segment and to associate motion information indicative of the global or regional motion in the surrounding region with the segment to be encoded.

17. An encoder according to claim 13, wherein said analyzing means comprises means for identifying at least one of the following types of motion: continuous motion, motion having a common velocity, and motion having a certain deviation.

18. An encoder according to claim 13, wherein if said analyzing means determines that a segment of the first frame in the region of the first frame surrounding the segment to be encoded has no motion, the encoder is arranged to assign the skip mode as the coding mode

of the segment and to associate motion information indicative of zero motion with the segment to be encoded.

19. A video decoder arranged to decode an encoded digital video sequence using motion compensated prediction, said digital video sequence comprising a number of frames, said decoder comprising:

means for receiving an indication of a coding mode assigned to a segment of a first frame of the sequence encoded using motion compensated prediction with respect to a second frame of the sequence, said coding mode being one of a set of possible coding modes including a skip mode; and

means for forming a prediction for the segment, wherein when said skip mode is indicated as the coding mode assigned to said segment of the first frame, the decoder is arranged to determine

(i) whether said skip mode indicates that the segment has an insignificant level of motion, in which case said forming means forming the prediction for the segment by copying directly from a corresponding region of the second frame, or

(ii) whether said skip mode indicates that the segment has motion characteristic of global or regional motion in the video sequence, in which case said forming means forming the prediction for the segment by motion compensated prediction with respect to the second frame using motion information representative of said global or regional motion.

20. A decoder according to claim 19, further comprising means for analyzing motion in a previously decoded region of the first frame surrounding the segment to be decoded in order to determine a characteristic of the motion in said region.

21. A decoder according to claim 20, wherein if said analyzing means determines that the motion in said region has an insignificant level, the encoder is arranged to associate motion information indicative of zero motion with the segment to be decoded.

22. A decoder according to claim 20, wherein if said analyzing means determines that the motion in said region is characteristic of global or regional motion, the decoder is arranged to associate motion information indicative of the global or regional motion in the surrounding region with the segment to be decoded.

23. A decoder according to claim 20, wherein said analyzing means comprises means for identifying at least one of the following types of motion: continuous motion, motion having a common velocity, motion having a certain deviation.

24. A decoder according to claim 20, wherein if said analyzing means determines that a previously decoded segment of the first frame in said region has no motion, the decoder is arranged to associate motion information indicative of zero motion with the segment to be decoded.

25. A multimedia terminal, comprising

means for obtaining a digital video sequence; and

a video encoder arranged to encode the digital video sequence using motion compensated prediction, said digital video sequence comprising a number of frames, wherein the video encoder comprises:

means for assigning a coding mode to a segment of a first frame of the sequence to be encoded using motion compensated prediction with respect to a second frame of the sequence, wherein said coding mode is one of a set of possible modes including a skip mode; and

means for forming a prediction for the segment, wherein said skip mode, when assigned to said segment of the first frame, indicates either

(i) that the segment has an insignificant level of motion, in which case, the video encoder is arranged such that said forming means forms a prediction for the segment by copying directly from a corresponding region of the second frame, or

(ii) that the segment has motion characteristic of global or regional motion in the video sequence, in which case, the video encoder is arranged such that said forming means

forms a prediction for the segment with respect to the second frame using motion information representative of said global or regional motion.

26. A multimedia terminal comprising:

means for acquiring an encoded digital video sequence; and

a video decoder arranged to decode the encoded digital video sequence using motion compensated prediction, said digital video sequence comprising a number of frames, said decoder comprising:

means for receiving an indication of a coding mode assigned to a segment of a first frame of the sequence encoded using motion compensated prediction with respect to a second frame of the sequence, said coding mode being one of a set of possible coding modes including a skip mode; and

means for forming a prediction for the segment, wherein when said skip mode is indicated as the coding mode assigned to said segment of the first frame, the decoder is arranged to determine

(i) whether said skip mode indicates that the segment has an insignificant level of motion, in which case said forming means forming the prediction for the segment by copying directly from a corresponding region of the second frame, or

(ii) whether said skip mode indicates that the segment has motion characteristic of global or regional motion in the video sequence, in which case said forming means forming the prediction for the segment by motion compensated prediction with respect to the second frame using motion information representative of said global or regional motion.

27. A video codec comprising:

a video encoder arranged to encode a digital video sequence using motion compensated prediction, said digital video sequence comprising a number of frames, said encoder comprising:

means for assigning a coding mode to a segment of a first frame of the sequence to be encoded using motion compensated prediction with respect to a second frame of the

sequence, wherein said coding mode is one of a set of possible modes including a skip mode; and

means for forming a prediction for the segment, wherein said skip mode, when assigned to said segment of the first frame, indicates either

(i) that the segment has an insignificant level of motion, in which case, the video encoder is arranged such that said forming means forms a prediction for the segment by copying directly from a corresponding region of the second frame, or

(ii) that the segment has motion characteristic of global or regional motion in the video sequence, in which case, the video encoder is arranged such that said forming means forms a prediction for the segment with respect to the second frame using motion information representative of said global or regional motion; and

a video decoder arranged to decode an encoded digital video sequence using motion compensated prediction, said digital video sequence comprising a number of frames, said decoder comprising:

means for receiving an indication of a coding mode assigned to a segment of a first frame of the sequence encoded using motion compensated prediction with respect to a second frame of the sequence, said coding mode being one of a set of possible coding modes including a skip mode; and

means for forming a prediction for the segment, wherein when said skip mode is indicated as the coding mode assigned to said segment of the first frame, the decoder is arranged to determine

(i) whether said skip mode indicates that the segment has an insignificant level of motion, in which case said forming means forming the prediction for the segment by copying directly from a corresponding region of the second frame, or

(ii) whether said skip mode indicates that the segment has motion characteristic of global or regional motion in the video sequence, in which case said forming means forming the prediction for the segment by motion compensated prediction with respect to the second frame using motion information representative of said global or regional motion.

Abstract of the Disclosure

A method of motion-compensated video encoding that enables a video sequence with a global motion component to be encoded in an efficient manner. A video encoder is arranged to assign macroblocks to be coded to specific coding modes including a skip mode, which is used to indicate one of two possible types of macroblock motion: a) zero motion, or b) global or regional motion. As each macroblock is encoded, a previously encoded region surrounding the macroblock is examined and the characteristics of motion in that region determined. With the skip mode, the macroblock to be coded and a motion vector describing the global motion or regional motion is associated with the macroblock if the motion in the region is characteristic of global motion or regional motion. If the region exhibits an insignificant level of motion, a zero valued motion vector is associated with the macroblock.

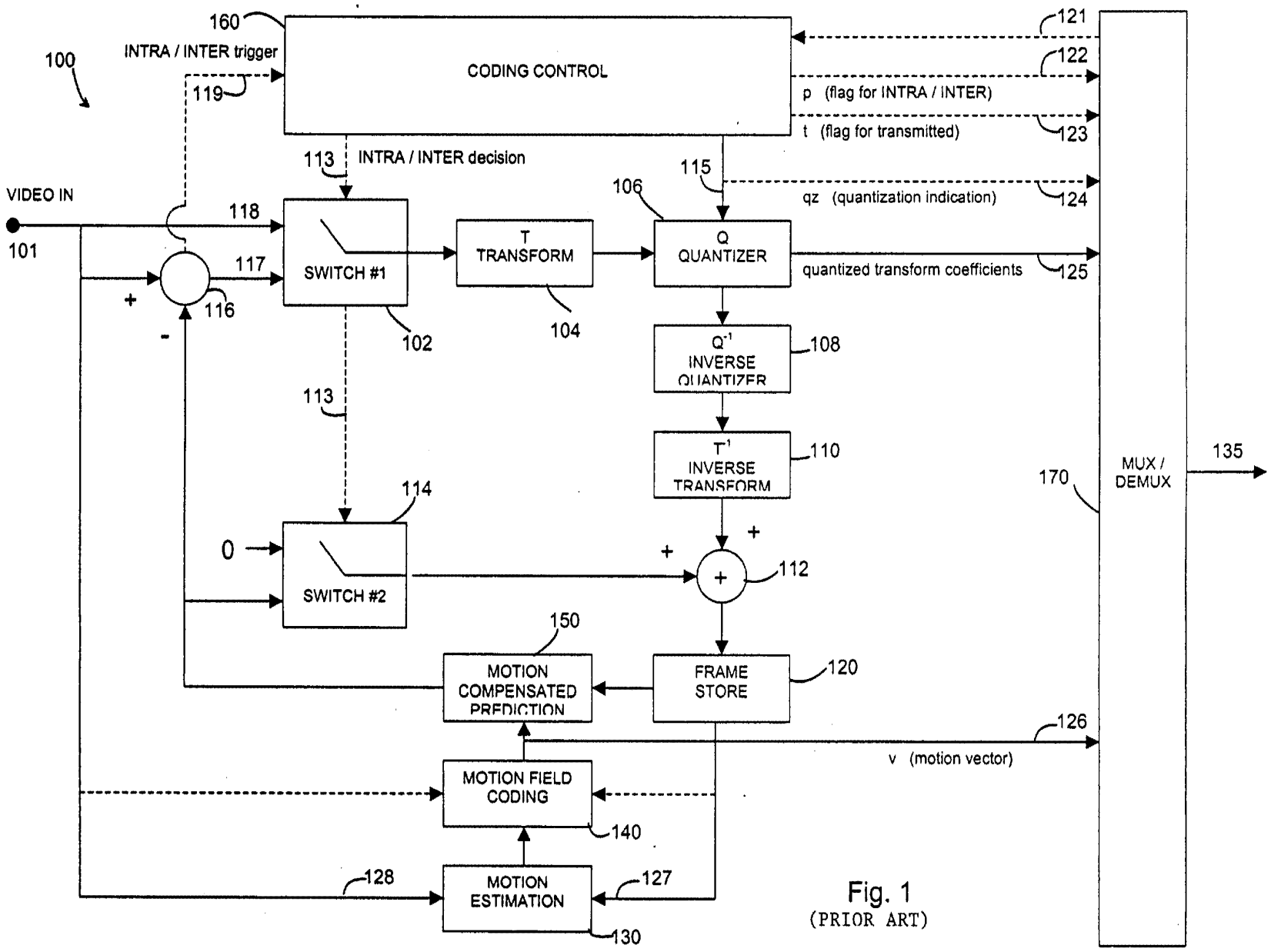

Fig. 1
(PRIOR ART)

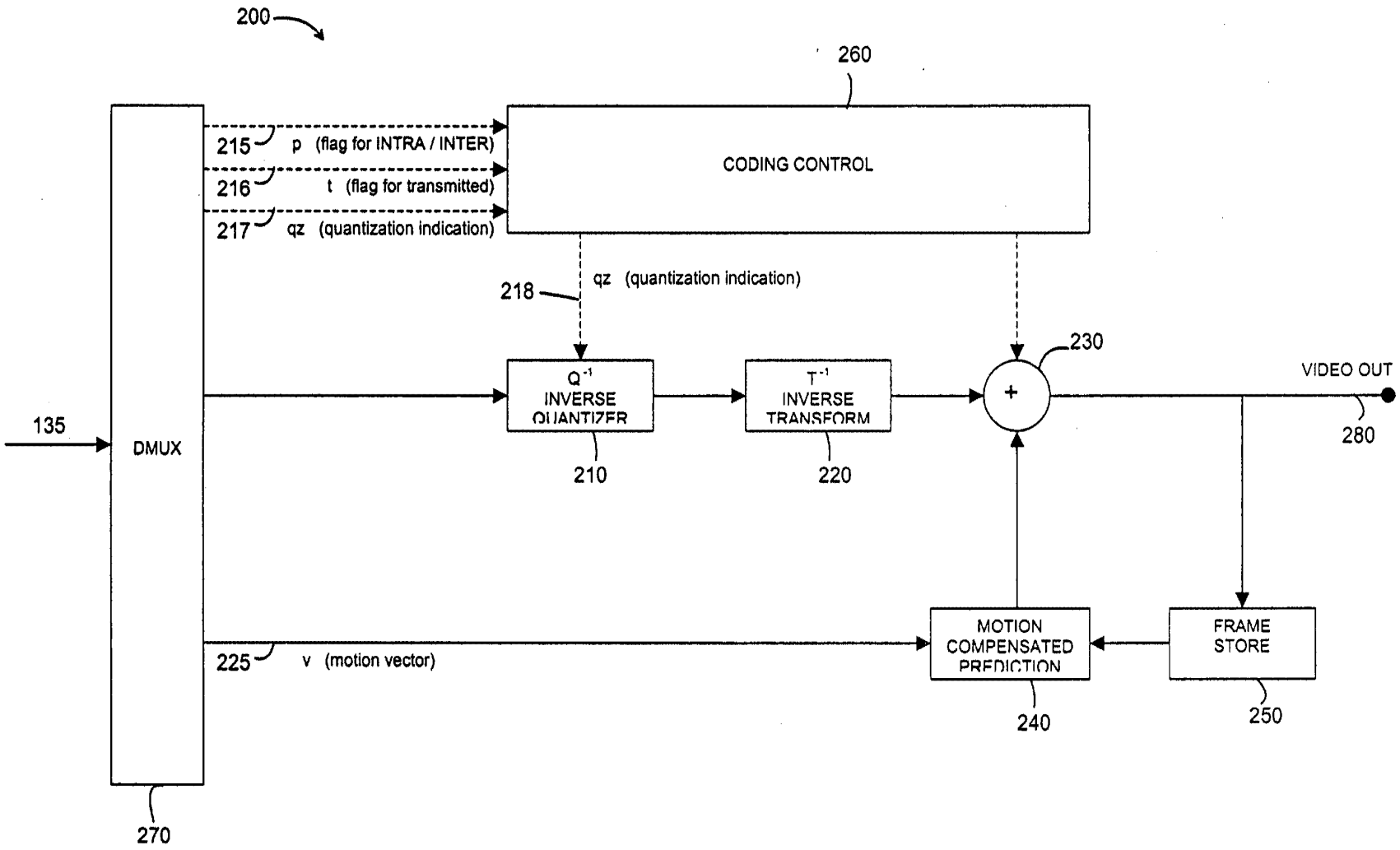

Fig. 2
(PRIOR ART)

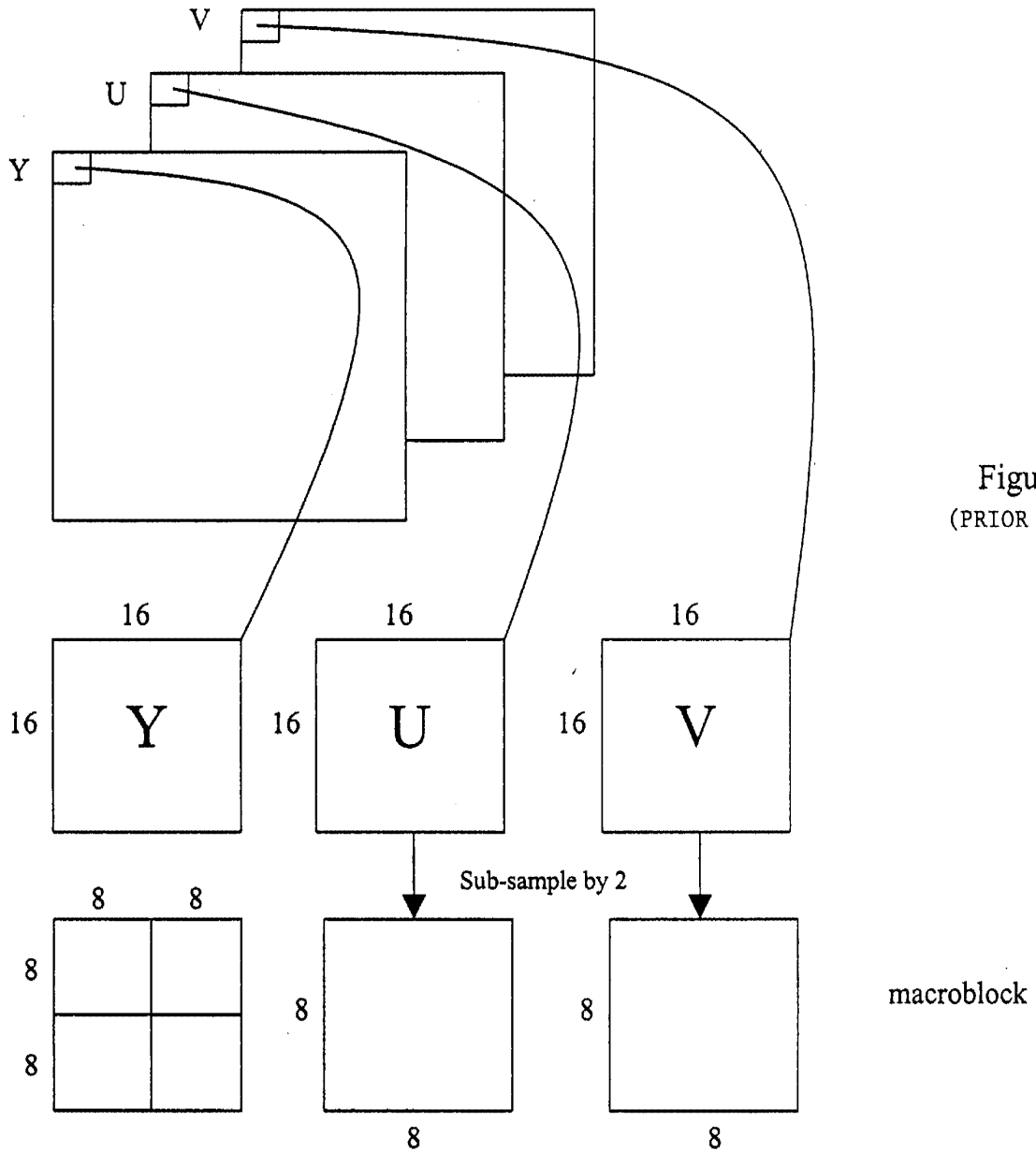

Figure 3
(PRIOR ART)

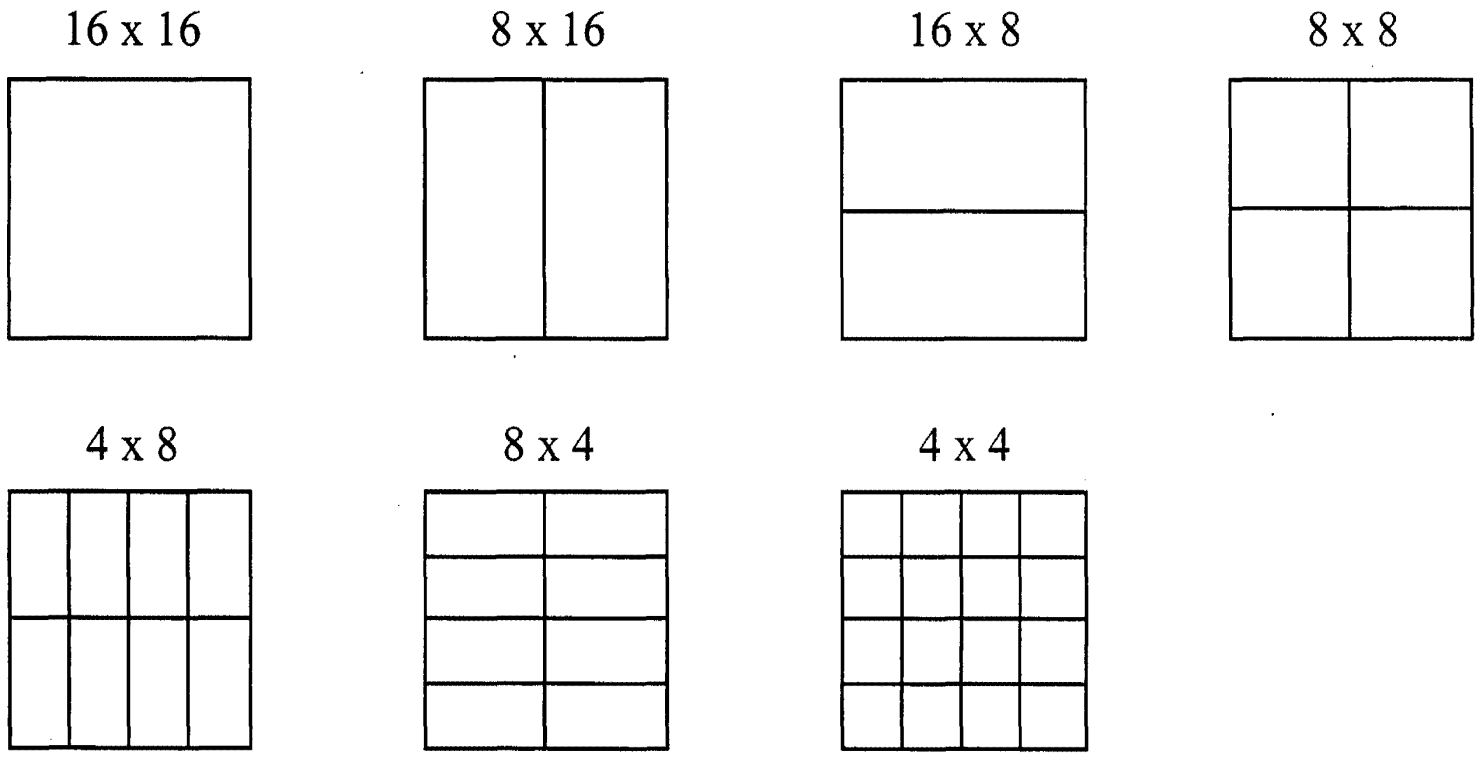

FIG. 4

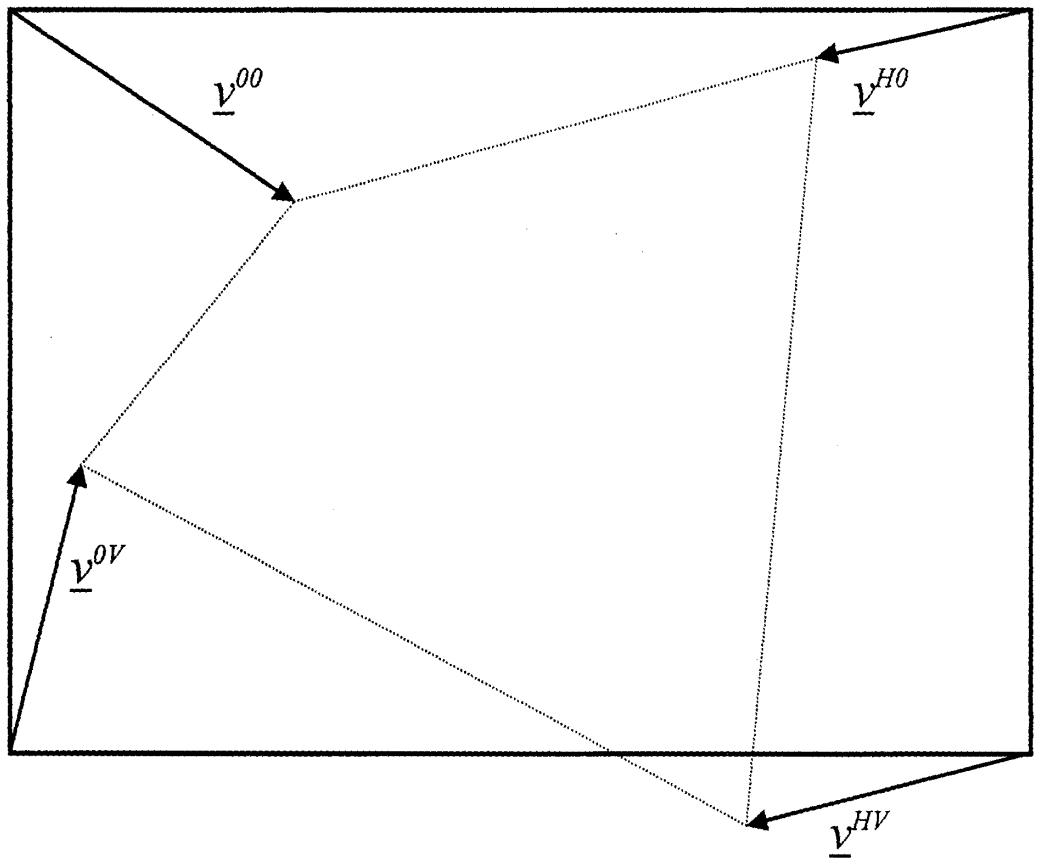

FIG. 5

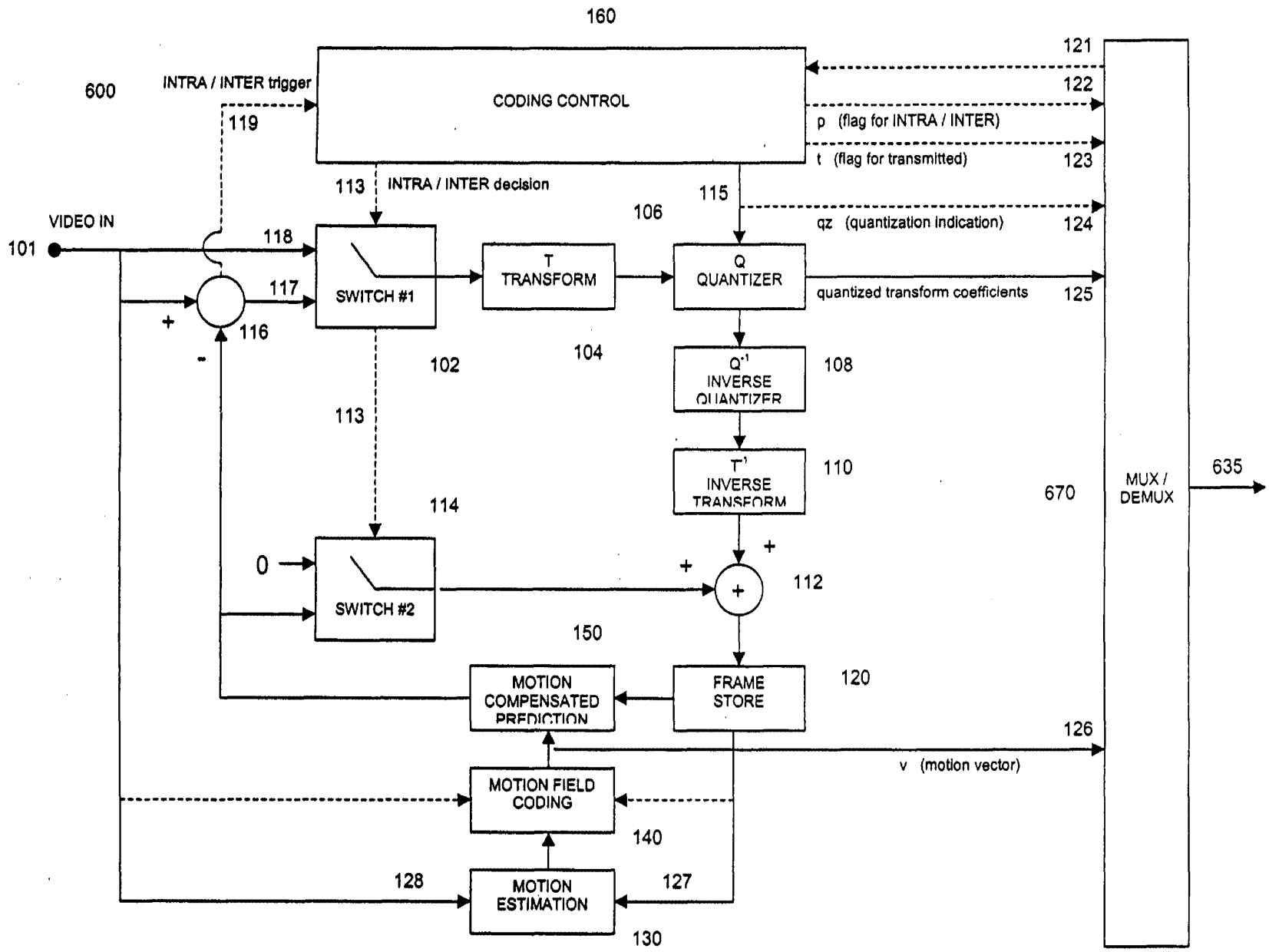
160
600
INTRA / INTER trigger
119
CODING CONTROL
121
122
p (flag for INTRA / INTER)
t (flag for transmitted)
123
113
INTRA / INTER decision
115
106
qz (quantization indication)
124
VIDEO IN
101
118
117
116
SWITCH #1
T
TRANSFORM
Q
QUANTIZER
quantized transform coefficients
125
102
104
Q⁻¹
INVERSE
QUANTIZER
108
113
T⁻¹
INVERSE
TRANSFORM
110
670
MUX /
DEMUX
635
114
0
SWITCH #2
112
150
MOTION
COMPENSATED
PREDICTION
FRAME
STORE
120
126
v (motion vector)
MOTION FIELD
CODING
140
128
MOTION
ESTIMATION
127
130

FIG. 6

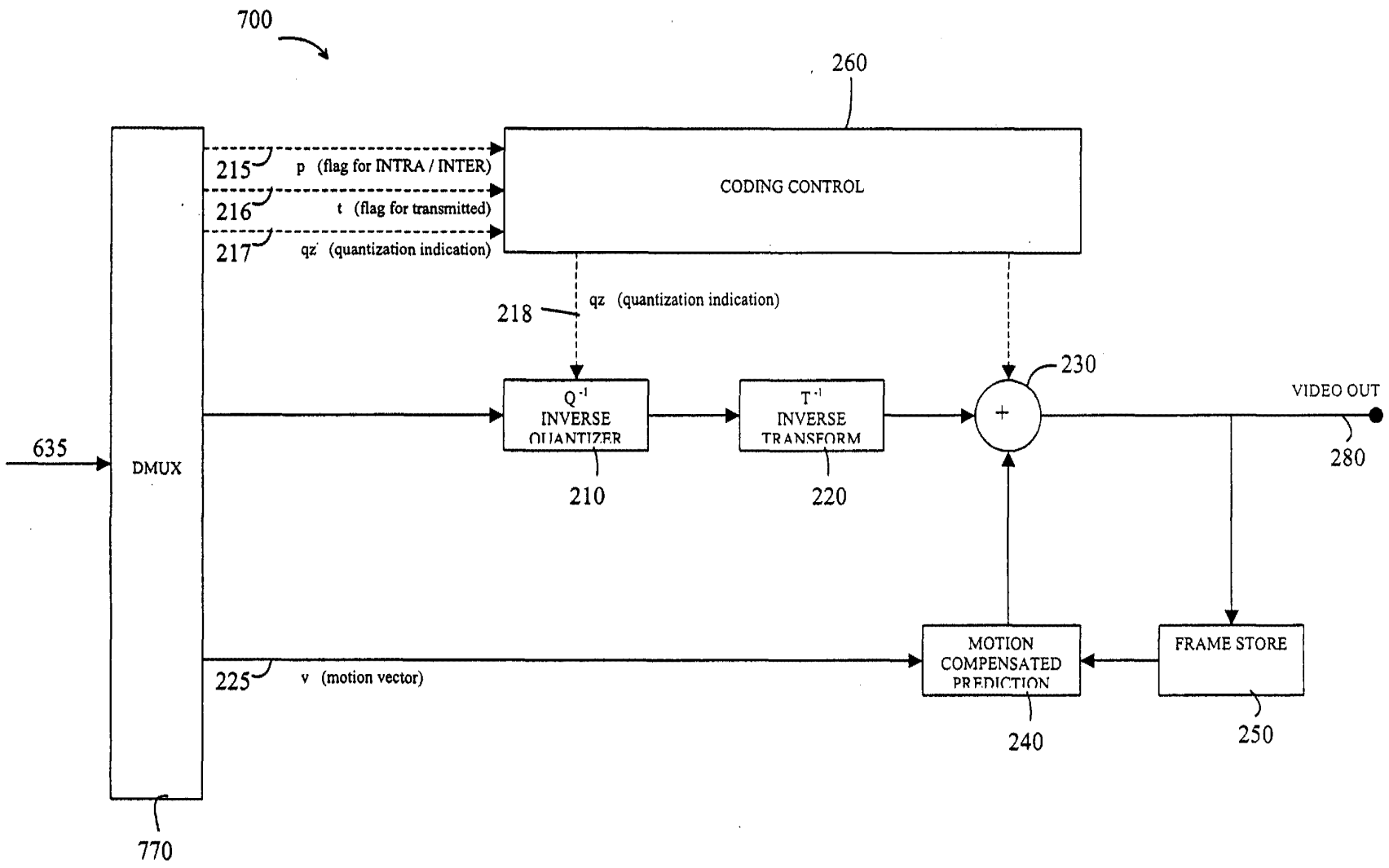
700
260
CODING CONTROL
215
p (flag for INTRA / INTER)
216
t (flag for transmitted)
217
qz (quantization indication)
218
qz (quantization indication)
635
DMUX
770
Q-1
INVERSE
QUANTIZER
210
T-1
INVERSE
TRANSFORM
220
230
VIDEO OUT
280
225
v (motion vector)
MOTION
COMPENSATED
PREDICTION
240
FRAME STORE
250

Fig. 7

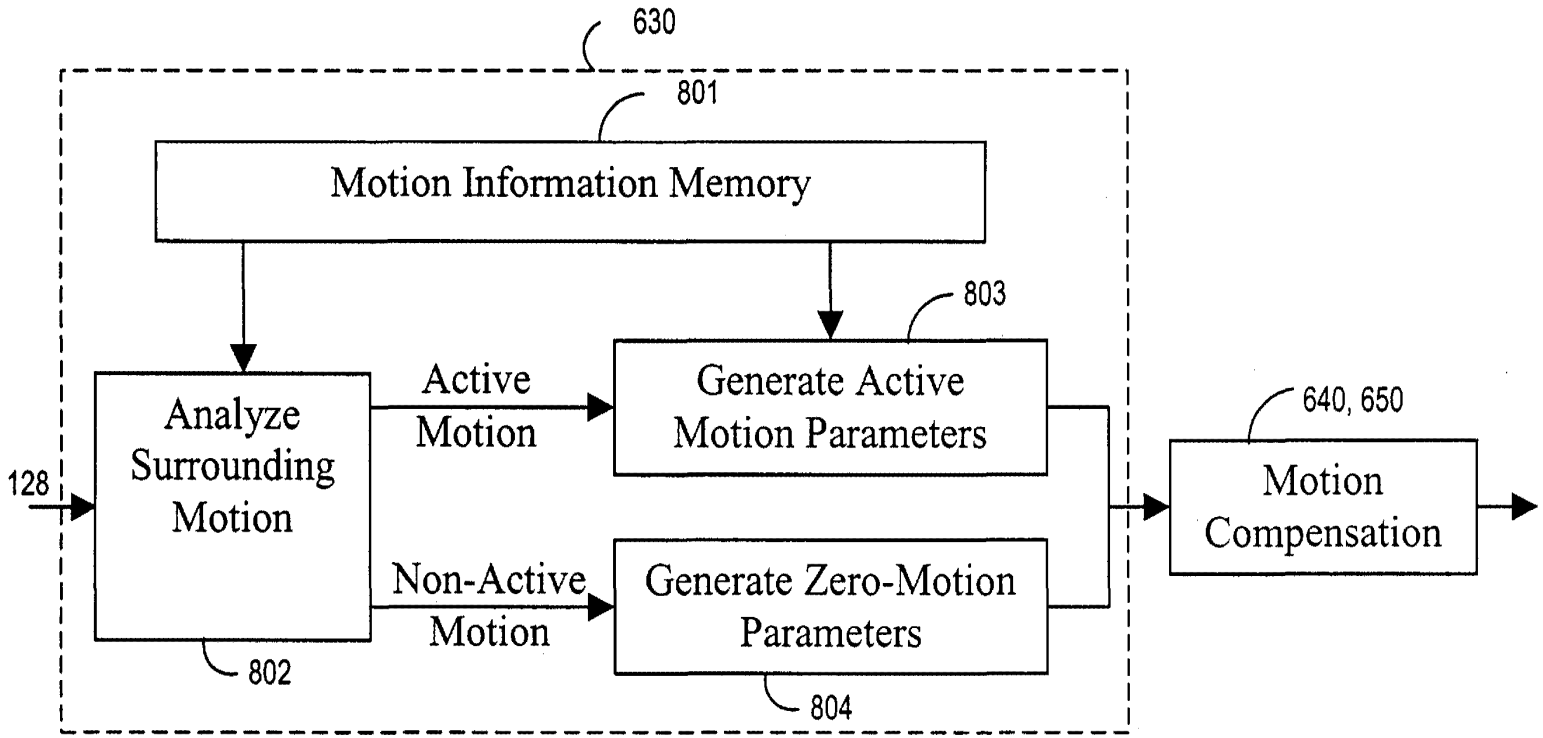
630
801
Motion Information Memory
803
Analyze Surrounding Motion
Active Motion
Generate Active Motion Parameters
128
Non-Active Motion
Generate Zero-Motion Parameters
802
804
640, 650
Motion Compensation

FIG. 8

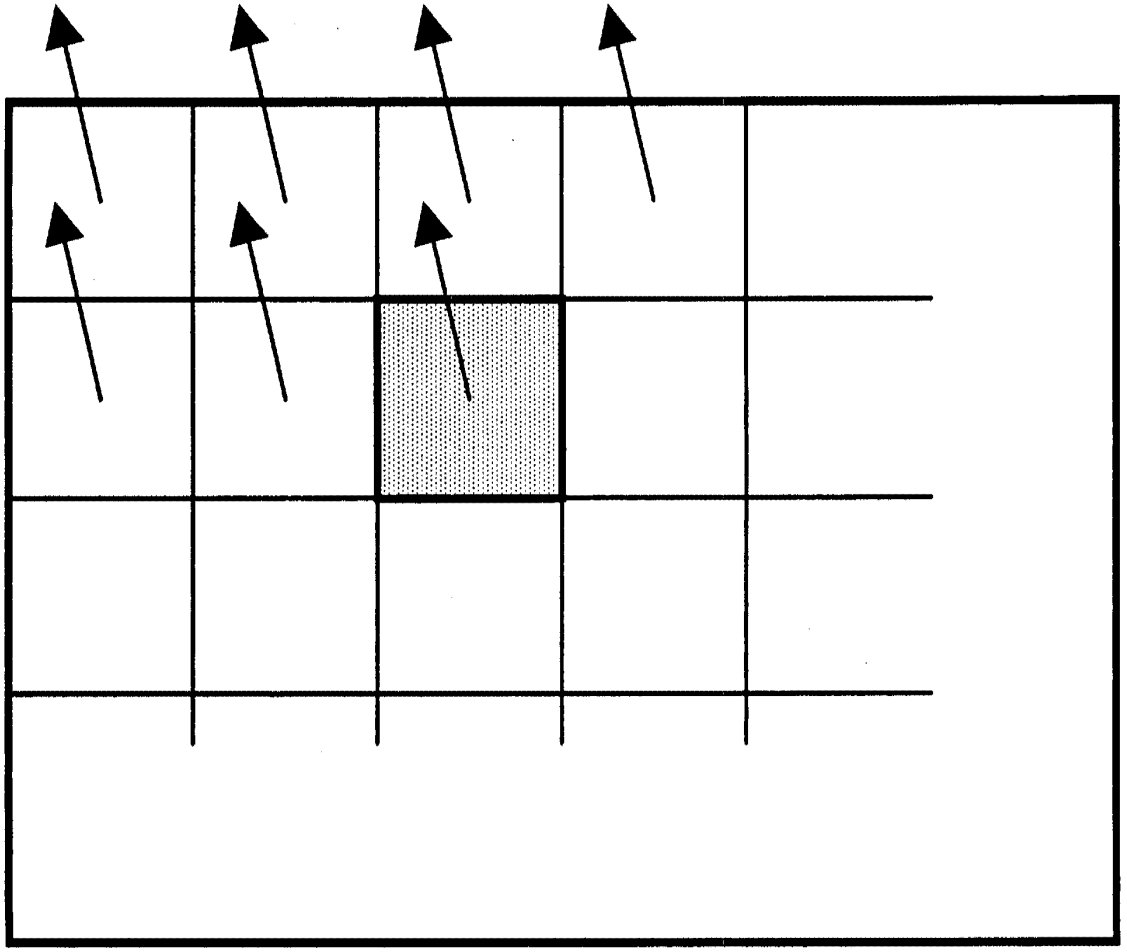

FIG. 9

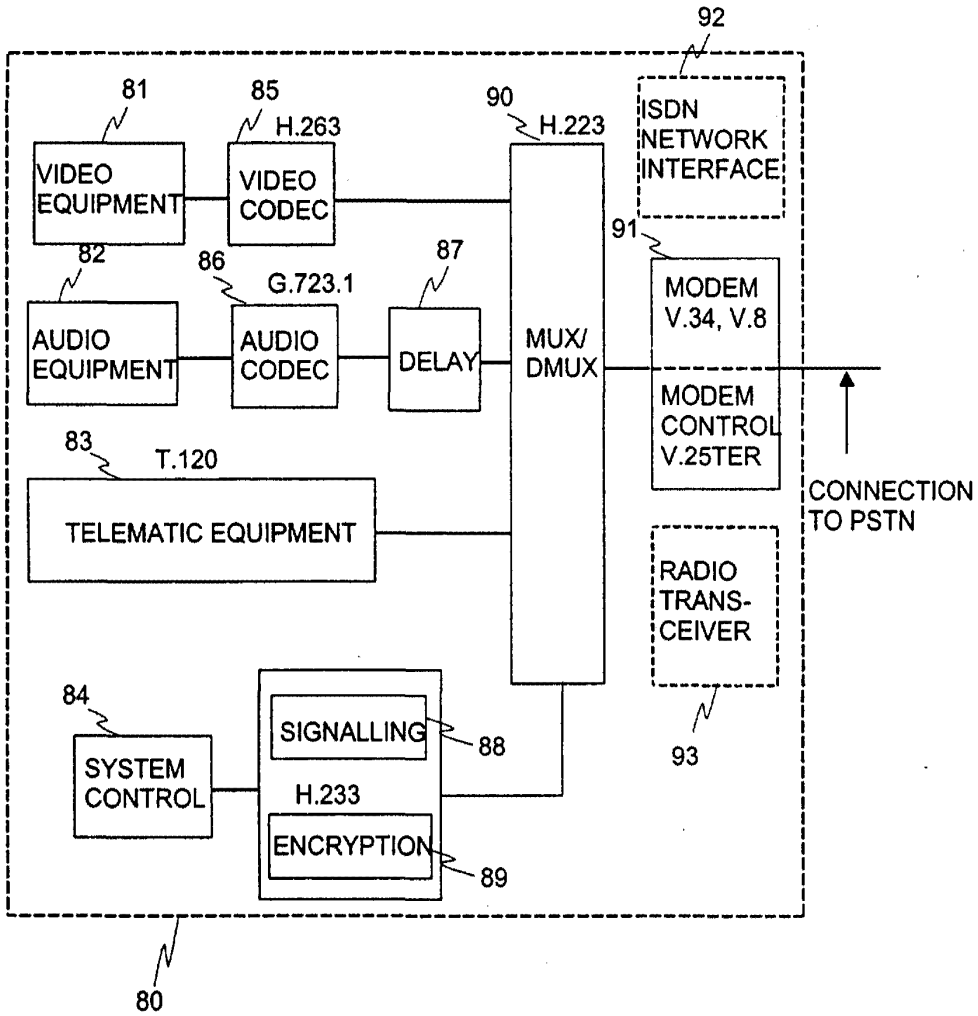
92
81
85
H.263
90
H.223
ISDN
NETWORK
INTERFACE
VIDEO
EQUIPMENT
VIDEO
CODEC
91
82
86
G.723.1
87
MODEM
V.34, V.8
AUDIO
EQUIPMENT
AUDIO
CODEC
DELAY
MUX/
DMUX
MODEM
CONTROL
V.25TER
83
T.120
CONNECTION
TO PSTN
TELEMATIC EQUIPMENT
RADIO
TRANS-
CEIVER
84
SIGNALLING
88
93
SYSTEM
CONTROL
H.233
ENCRYPTION
89
80

Fig. 10

PATENT APPLICATION FEE DETERMINATION RECORD
Effective January 1, 2003

Application or Docket Number
944-001-105

CLAIMS AS FILED - PART I

	(Column 1)	(Column 2)
TOTAL CLAIMS	27	
FOR	NUMBER FILED	NUMBER EXTRA
TOTAL CHARGEABLE CLAIMS	27 minus 20=	* 7
INDEPENDENT CLAIMS	7 minus 3 =	* 4
MULTIPLE DEPENDENT CLAIM PRESENT		☐

* If the difference in column 1 is less than zero, enter "0" in column 2

SMALL ENTITY TYPE ☐		OR	OTHER THAN SMALL ENTITY	
RATE	FEE		RATE	FEE
BASIC FEE	375.00	OR	BASIC FEE	750.00
X$ 9=		OR	X$18=	1260.00
X42=		OR	X84=	336.00
+140=		OR	+280=	
TOTAL		OR	TOTAL	

CLAIMS AS AMENDED - PART II

AMENDMENT A

	(Column 1)		(Column 2)	(Column 3)
	CLAIMS REMAINING AFTER AMENDMENT		HIGHEST NUMBER PREVIOUSLY PAID FOR	PRESENT EXTRA
Total	*	Minus	**	=
Independent	*	Minus	***	=
FIRST PRESENTATION OF MULTIPLE DEPENDENT CLAIM				☐

SMALL ENTITY		OR	OTHER THAN SMALL ENTITY	
RATE	ADDI-TIONAL FEE		RATE	ADDI-TIONAL FEE
X$ 9=		OR	X$18=	
X42=		OR	X84=	
+140=		OR	+280=	
TOTAL ADDIT. FEE		OR	TOTAL ADDIT. FEE	

AMENDMENT B

	(Column 1)		(Column 2)	(Column 3)
	CLAIMS REMAINING AFTER AMENDMENT		HIGHEST NUMBER PREVIOUSLY PAID FOR	PRESENT EXTRA
Total	*	Minus	**	=
Independent	*	Minus	***	=
FIRST PRESENTATION OF MULTIPLE DEPENDENT CLAIM				☐

RATE	ADDI-TIONAL FEE		RATE	ADDI-TIONAL FEE
X$ 9=		OR	X$18=	
X42=		OR	X84=	
+140=		OR	+280=	
TOTAL ADDIT. FEE		OR	TOTAL ADDIT. FEE	

AMENDMENT C

	(Column 1)		(Column 2)	(Column 3)
	CLAIMS REMAINING AFTER AMENDMENT		HIGHEST NUMBER PREVIOUSLY PAID FOR	PRESENT EXTRA
Total	*	Minus	**	=
Independent	*	Minus	***	=
FIRST PRESENTATION OF MULTIPLE DEPENDENT CLAIM				☐

RATE	ADDI-TIONAL FEE		RATE	ADDI-TIONAL FEE
X$ 9=		OR	X$18=	
X42=		OR	X84=	
+140=		OR	+280=	
TOTAL ADDIT. FEE		OR	TOTAL ADDIT. FEE	

* If the entry in column 1 is less than the entry in column 2, write "0" in column 3.
** If the "Highest Number Previously Paid For" IN THIS SPACE is less than 20, enter "20."
***If the "Highest Number Previously Paid For" IN THIS SPACE is less than 3, enter "3."
The "Highest Number Previously Paid For" (Total or Independent) is the highest number found in the appropriate box in column 1.

CLAIMS ONLY	SERIAL NO. 10/390549	FILING DATE 3/14/03
	APPLICANT(S)	

CLAIMS

	AS FILED		AFTER 1ST AMENDMENT		AFTER 2ND AMENDMENT							
	IND	DEP	IND	DEP	IND	DEP		IND	DEP	IND	DEP	IND	DEP
1	1						51						
2							52						
3							53						
4							54						
5							55						
6							56						
7							57						
8	8						58						
9							59						
10							60						
11							61						
12	1						62						
13							63						
14							64						
15							65						
16							66						
17							67						
18							68						
19	1						69						
20							70						
21							71						
22							72						
23							73						
24							74						
25	1						75						
26	1						76						
27	1						77						
28							78						
29							79						
30							80						
31							81						
32							82						
33							83						
34							84						
35							85						
36							86						
37							87						
38							88						
39							89						
40							90						
41							91						
42							92						
43							93						
44							94						
45							95						
46							96						
47							97						
48							98						
49							99						
50							100						
TOTAL IND.	7						TOTAL IND.						
TOTAL DEP.	20						TOTAL DEP.						
TOTAL CLAIMS	27						TOTAL CLAIMS						

PTO-2202 (Replication only) (1/03)

UNITED STATES PATENT AND TRADEMARK OFFICE

UNITED STATES DEPARTMENT OF COMMERCE
United States Patent and Trademark Office
Address: COMMISSIONER OF PATENTS AND TRADEMARKS
P.O. Box 1450
Alexandria, Virginia 22313-1450
www.uspto.gov

APPLICATION NUMBER	FILING/RECEIPT DATE	FIRST NAMED APPLICANT	ATTORNEY DOCKET NUMBER
10/390,549	03/14/2003	Jani Lainema	944-001.105

CONFIRMATION NO. 3966

FORMALITIES LETTER

OC000000010055013

004955
WARE FRESSOLA VAN DER SLUYS &
ADOLPHSON, LLP
BRADFORD GREEN BUILDING 5
755 MAIN STREET, P O BOX 224
MONROE, CT 06468

Date Mailed: 05/16/2003

NOTICE TO FILE MISSING PARTS OF NONPROVISIONAL APPLICATION

FILED UNDER 37 CFR 1.53(b)

Filing Date Granted

Items Required To Avoid Abandonment:

An application number and filing date have been accorded to this application. The item(s) indicated below, however, are missing. Applicant is given **TWO MONTHS** from the date of this Notice within which to file all required items and pay any fees required below to avoid abandonment. Extensions of time may be obtained by filing a petition accompanied by the extension fee under the provisions of 37 CFR 1.136(a).

- The statutory basic filing fee is missing.
  Applicant must submit $ **750** *to complete the basic filing fee for a non-small entity. If appropriate, applicant may make a written assertion of entitlement to small entity status and pay the small entity filing fee (37 CFR 1.27).*
- The oath or declaration is missing.
  A properly signed oath or declaration in compliance with 37 CFR 1.63, identifying the application by the above Application Number and Filing Date, is required.
- To avoid abandonment, a late filing fee or oath or declaration surcharge as set forth in 37 CFR 1.16(e) of $130 for a non-small entity, must be submitted with the missing items identified in this letter.

Items Required To Avoid Processing Delays:

The item(s) indicated below are also required and should be submitted with any reply to this notice to avoid further processing delays.

- Additional claim fees of **$462** as a non-small entity, including any required multiple dependent claim fee, are required. Applicant must submit the additional claim fees or cancel the additional claims for which fees are due.

SUMMARY OF FEES DUE:

Total additional fee(s) required for this application is **$1342** for a Large Entity

- **$750** Statutory basic filing fee.
- **$130** Late oath or declaration Surcharge.
- Total additional claim fee(s) for this application is **$462**
  - **$126** for **7** total claims over 20 .
  - **$336** for **4** independent claims over 3 .

A copy of this notice MUST be returned with the reply.

Customer Service Center
Initial Patent Examination Division (703) 308-1202

PART 3 - OFFICE COPY

UNITED STATES PATENT AND TRADEMARK OFFICE

UNITED STATES DEPARTMENT OF COMMERCE
United States Patent and Trademark Office
Address: COMMISSIONER OF PATENTS AND TRADEMARKS
P.O. Box 1450
Alexandria, Virginia 22313-1450
www.uspto.gov

APPLICATION NUMBER	FILING/RECEIPT DATE	FIRST NAMED APPLICANT	ATTORNEY DOCKET NUMBER
10/390,549	03/14/2003	Jani Lainema	944-001.105

CONFIRMATION NO. 3966

FORMALITIES LETTER

OC000000010055013

004955
WARE FRESSOLA VAN DER SLUYS &
ADOLPHSON, LLP
BRADFORD GREEN BUILDING 5
755 MAIN STREET, P O BOX 224
MONROE, CT 06468

OIPE JC10 JUN 12 2003 PATENT & TRADEMARK OFFICE

Date Mailed: 05/16/2003

NOTICE TO FILE MISSING PARTS OF NONPROVISIONAL APPLICATION

06/13/2003 SZEWDIE1 00000054 10390549

01 FC:1001	750.00 OP
02 FC:1051	130.00 OP
03 FC:1201	336.00 OP
04 FC:1202	126.00 OP

FILED UNDER 37 CFR 1.53(b)

Filing Date Granted

Items Required To Avoid Abandonment:

An application number and filing date have been accorded to this application. The item(s) indicated below, however, are missing. Applicant is given **TWO MONTHS** from the date of this Notice within which to file all required items and pay any fees required below to avoid abandonment. Extensions of time may be obtained by filing a petition accompanied by the extension fee under the provisions of 37 CFR 1.136(a).

- The statutory basic filing fee is missing.
  Applicant must submit $ **750** *to complete the basic filing fee for a non-small entity. If appropriate, applicant may make a written assertion of entitlement to small entity status and pay the small entity filing fee (37 CFR 1.27).*
- The oath or declaration is missing.
  A properly signed oath or declaration in compliance with 37 CFR 1.63, identifying the application by the above Application Number and Filing Date, is required.
- To avoid abandonment, a late filing fee or oath or declaration surcharge as set forth in 37 CFR 1.16(e) of $130 for a non-small entity, must be submitted with the missing items identified in this letter.

Items Required To Avoid Processing Delays:

The item(s) indicated below are also required and should be submitted with any reply to this notice to avoid further processing delays.

- Additional claim fees of $**462** as a non-small entity, including any required multiple dependent claim fee, are required. Applicant must submit the additional claim fees or cancel the additional claims for which fees are due.

SUMMARY OF FEES DUE:

Total additional fee(s) required for this application is $**1342** for a Large Entity

- **$750** Statutory basic filing fee.
- **$130** Late oath or declaration Surcharge.
- Total additional claim fee(s) for this application is **$462**
  - **$126** for **7** total claims over 20 .
  - **$336** for **4** independent claims over 3 .

A copy of this notice MUST be returned with the reply.

Customer Service Center
Initial Patent Examination Division (703) 308-1202
PART 2 - COPY TO BE RETURNED WITH RESPONSE

Practitioner's Docket No. 944-001.105 *PATENT*

OIPE JC10 JUN 1 2 2003 PATENT & TRADEMARK OFFICE

IN THE UNITED STATES PATENT AND TRADEMARK OFFICE

In re application of: Jani Lainema

Application No.: 10/390,549 Group No.: 2614
Filed: March 14, 2003 Examiner: to be assigned
For: METHOD FOR CODING MOTION IN A VIDEO SEQUENCE

Mail Stop Missing Parts
Commissioner for Patents
P.O. Box 1450
Alexandria, VA 22313-1450

COMPLETION OF FILING REQUIREMENTS
- NONPROVISIONAL APPLICATION

(check and complete this item, if applicable)

I. ☒ This replies to the Notice to File Missing Parts of Application (PTO-1533) mailed May 16, 2003.

NOTE: If these papers are filed before the office letter issues, adequate identification of the original papers should be made, e.g., in addition to the name of the inventor and title of invention, the filing date based on the "Express Mail" procedure, the serial number from the return post card or the attorney's docket number added.

☒ A copy of the Notice to File Missing Parts of Application – Filing Date Granted (Form PTO-1533) is enclosed.

NOTE: The PTO requires that a copy of Form PTO-1533 be returned with the response to the notice to file missing parts to the application.

CERTIFICATE OF MAILING/TRANSMISSION (37 C.F.R. § 1.8(a))

I hereby certify that this correspondence is, on the date shown below, being:

MAILING

☒ deposited with the United States Postal Service with sufficient postage as first class Mail in an envelope addressed to the Mail Stop Missing Parts, Commissioner for Patents, Alexandria, VA 22313-1450.

FACSIMILE

☐ transmitted by facsimile to the Patent and Trademark Office.

Signature

Date: 6.10.03

Cathy Wilcox
(type or print name of person certifying)

DECLARATION OR OATH

II. ☒ No declaration or oath was filed. Enclosed is the original declaration or oath for this application.

NOTE: If the correct inventor or inventors are not named on filing a nonprovisional application under § 1.53(b) without an executed oath or declaration under § 1.63, the later submission of an executed oath or declaration under § 1.63 during the pendency of the application will act to correct the earlier identification of inventorship. 37 C.F.R. § 1.48(f)(1).

OR

☐ The declaration or oath that was filed was determined to be defective. A new original oath or declaration is attached.

NOTE: For surcharge fee for filing declaration after filing date complete item VI(3) below.

NOTE: "The following combinations of information supplied in an oath or declaration filed after the filing date are acceptable as minimums for identifying a specification and compliance with any one of the items below will be accepted as complying with the identification requirement of 37 C.F.R. § 1.63:

"(A) application number (consisting of the series code and the serial number, e.g., 08/123,456;

"(B) serial number and filing date;

"(C) attorney docket number which was on the specification as filed;

"(D) title which was on the specification as filed and reference to an attached specification which is both attached to the oath or declaration at the time of execution and submitted with the oath or declaration; or

"(E) title which was on the specification as filed and accompanied by a cover letter accurately identifying the application for which it was intended by either the application number (consisting of the series code and the serial number, e.g., 08/123,456), or serial number and filing date. Absent any statement(s) to the contrary, it will be presumed that the application filed in the PTO is the application which the inventor(s) executed by signing the oath or declaration."

M.P.E.P. § 601.01(a) 7th Ed.

NOTE: Another minimum found acceptable in the declaration is the filing date (i.e., date of express mail) and the express mail number, useful where the serial number is not yet known. But note the practice where the express mail deposit is a Saturday, Sunday or holiday within the District of Columbia. 37 C.F.R. § 1.10(c).

(complete (c) or (d), if applicable)

Attached is a

(c) ☐ Statement by a registered attorney that the application filed in the PTO is the application that the inventor executed by signing the declaration.

(d) ☐ Statement that the "attached" specification is a copy of the specification and any amendments thereto that were filed in the PTO to obtain the filing date.

AMENDMENT CANCELLING CLAIMS

III. ☐ Cancel claims _____ inclusive.

TRANSMITTAL OF ENGLISH TRANSLATION OF NON-ENGLISH LANGUAGE PAPERS

IV. ☐ Submitted herewith is an English translation of the non-English language application papers as originally filed. Also submitted herewith is a statement by the translator of the accuracy of the translation. It is requested that this translation be used as the copy for examination purposes in the PTO.

NOTE: For fee processing a non-English application, complete item VI(5) below.

NOTE: a non-English oath or declaration in the form provided by the PTO need not be translated. 37 C.F.R. § 1.69(b).

SMALL ENTITY STATUS

V. ☐ A statement that this filing is by a small entity

(check and complete applicable items)

☐ is attached.

☐ A separate refund request accompanies this paper.

☐ was filed on _____ (original).

COMPLETION FEES

VI.

WARNING: *Failure to submit the surcharge fees where required will cause the application to become abandoned. 37 C.F.R. § 1.53.*

NOTE: For effect on fees of failure to establish status, or change status, as a small entity, see 37 C.F.R. § 1.28(a).

1. Filing fee

☒ original patent application
(37 C.F.R. § 1.16(a) - $740.00; small entity - $370.00) $ 750.00

☐ design application
(37 C.F.R. § 1.16(f) - $330.00; small entity - $165.00) $_____

$_____

2. Fees for claims

☒ each independent claim in excess of 3
(37 C.F.R. § 1.16(b) - $84.00; small entity - $42.00) $ 336.00

☒ each claim in excess of 20
(37 C.F.R. § 1.16(c) - $18.00; small entity - $9.00) $ 126.00

☐ multiple dependent claim(s)
(37 C.F.R. § 1.16(d) - $280.00; small entity - $140.00) $_____

3. Surcharge Fees

☒ late payment of filing fee and/or late filing of original declaration or oath (37 C.F.R. § 1.16(e) - $130.00); $ 130.00

NOTE: *Even where a facsimile declaration or oath signed by the inventor(s) was part of the originally filed papers, the surcharge fee is required.*

NOTE: *If both the filing fee and declaration or oath were missing from the original papers, the Office practice under § C.F.R. § 1.16(e) is that only one surcharge Fee need be paid whether the later filed oath or declaration and/or the filing fee are submitted afterwards at the same time or at different times.*

4. ☐ Petition and fee for filing by other than all the inventors or a person not the inventor (37 C.F.R. §§ 1.17(i) and 1.47 - $130.00) $_____

☐ Fee for processing an application filed with a specification in a non-English language (37 C.F.R. §§ 1.17(k) and 1.52(d) - $130.00) $_____

☐ Fee for processing and retention of application (37 C.F.R. §§ 1.21(l) and 1.53(d) - $130.00) $_____

☒ Assignment (See "ASSIGNMENT COVER SHEET".) $ 40.00

NOTE: *37 C.F.R. § 1.21(l) establishes a fee for processing and retaining any application which is abandoned for failing to complete the application pursuant to 37 C.F.R. § 1.53(f) and this, as well as the changes to 37 C.F.R. §§ 1.53 and 1.78, indicate that in order to obtain the benefit of a prior U.S. application, either the basic filing fee or the processing and retention fee of § 1.21(l) within 1 year of notification under § 1.53(f) must be paid.*

Total completion fees $ 1382.00

VII. EXTENSION OF TIME

(complete (a) or (b), as applicable)

The proceedings herein are for a patent application, and the provisions of 37 C.F.R. § 1.136(a) apply.

(a) ☐ Applicant petitions for an extension of time, the fees for which are set out in 37 C.F.R. § 1.17(a)(1)-(4), for the total number of months checked below:

Extension (months)	Fee for other than small entity	Fee for small entity
☐ one month	$ 110.00	$ 55.00
☐ two months	$ 400.00	$ 200.00
☐ three months	$ 920.00	$ 460.00
☐ four months	$1,440.00	$ 720.00

Fee: $_____

If an additional extension of time is required, please consider this a petition therefor.

(check and complete the next item, if applicable)

☐ An extension for ____ months has already been secured, and the fee paid therefor of $_____ is deducted from the total fee due for the total months of extension now requested.

Extension fee due with this request $_____

or

(b) ☒ Applicant believes that no extension of term is required. However, this condi-tional petition is being made to provide for the possibility that applicant has inadvertently overlooked the need for a petition and fee for extension of time.

TOTAL FEE DUE

VIII.

The total fee due is

Completion fee(s) $ 1382.00

Extension fee (if any) $ _____

Total Fee Due $ 1382.00

PAYMENT OF FEES

IX.

☒ Enclosed is a check in the amount of $ 1382.00

☐ Charge Account No. _____ in the amount of $ _____.
A duplicate of this request is attached.

NOTE: Fees should be itemized in such a manner that it is clear for which purpose the fees are paid. 37 C.F.R. § 1.22(b).

Please charge Account No. _____ for any fees that may be due by this paper.

AUTHORIZATION TO CHARGE ADDITIONAL FEES

X.

WARNING: *Accurately count claims, especially multiple dependant claims, to avoid unexpected high charges if extra claims are authorized.*

NOTE: "Amounts of twenty-five dollars or less will not be returned unless specifically requested within a reasonable time, nor will the payer be notified of such amounts; amounts over twenty-five dollars may be returned by check or, if requested, by credit to a deposit account." 37 C.F.R. § 1.26(a).

☒ The Commissioner is hereby authorized to charge the following additional fees that may be required by this paper and during the pendency of this application to Account No. 23-0442.

☐ 37 C.F.R. § 1.16(a), (f) or (g) (filing fees)

☐ 37 C.F.R. § 1.16(b), (c) and (d) (presentation of extra claims)

NOTE: Because additional fees for excess or multiple dependent claims not paid on filing or on later presentation must only be paid or these claims cancelled by amendment prior to the expiration of the time period set for response by the PTO in any notice of fee deficiency (37 C.F.R. § 1.16(d)), it might be best not to authorize the PTO to charge additional claim fees, except possibly when dealing with amendments after final action.

☐ 37 C.F.R. § 1.16(e) (surcharge for filing the basic filing fee and/or declaration on a date later than the filing date of the application)

☐ 37 C.F.R. § 1.17(a)(1)-(5) (extension fees pursuant to § 1.136(a))

☐ 37 C.F.R. § 1.17 (application processing fees)

NOTE: *"A written request may be submitted in an application that is an authorization to treat any concurrent or future reply, requiring a petition for an extension of time under this paragraph for its timely submission, as incorporating a petition for extension of time for the appropriate length of time. An authorization to charge all required fees, fees under § 1.17, or all required extension of time fees will be treated as a constructive petition for an extension of time in any concurrent or future reply requiring a petition for an extension of time under this paragraph for its timely submission. Submission of the fee set forth in § 1.17(a) will also be treated as a constructive petition for an extension of time in any concurrent reply requiring a petition for an extension of time under this paragraph for its timely submission." 37 C.F.R. § 1.136(a)(3).*

☐ 37 C.F.R. § 1.18 (issue fee at or before mailing of Notice of Allowance, pursuant to 37 C.F.R. § 1.311(b))

NOTE: *Where an authorization to charge the issue fee to a deposit account has been filed before the mailing of a Notice of Allowance, the issue fee will be automatically charged to the deposit account at the time of mailing the notice of allowance. 37 C.F.R. § 1.311(b).*

NOTE: *37 C.F.R. § 1.28(b) requires "Notification of any change in loss of entitlement to small entity status must be filed in the application...prior to paying, or at the time of paying...issue fee..." From the wording of 37 C.F.R. § 1.28(b): (a) notification of change of status must be made even if the fee is paid as "other than a small entity" and (b) no notification is required if the change is to another small entity.*

SIGNATURE OF PRACTITIONER

Reg. No. 40,061

Kenneth Q. Lao
(type or print name of practitioner)

Tel. No.: (203) 261-1234

WARE, FRESSOLA, VAN DER SLUYS & ADOLPHSON LLP
Bradford Green, Bldg. Five
755 Main St., P.O. Box 224
Monroe, CT 06468

Customer No. 04955

OIPE JC106
JUN 1 8 2003
PATENT & TRADEMARK OFFICE

2614
#4
S.I.
12-18-03

IN THE UNITED STATES PATENT AND TRADEMARK OFFICE

Re: Application of: J. Lainema

Attorney Docket: 944-001.105

Serial No.: 10/390,549

Group Art Unit: 2614

Filed: March 14, 2003

Examiner: to be assigned

For: **METHOD FOR CODING MOTION IN A VIDEO SEQUENCE**

RECEIVED
JUN 1 9 2003
Technology Center 2600

Commissioner For Patents
P.O. Box 1450
Alexandria, VA 22313-1450

INFORMATION DISCLOSURE STATEMENT

Sir:

Applicant submits herewith references of which they are aware, which they believe may be material to the examination of this application and in respect of which they may have a duty to disclose in accordance with 37 CFR 1.56.

While this Information Disclosure Statement may be "material" pursuant to 37 CFR 1.56, it is not intended to constitute an admission that any document referred to herein is "prior art" for this invention unless specifically designated as such.

In accordance with 37 CFR 1.97(g), the filing of this Information Disclosure Statement shall not be construed to mean that a search has been made or that no other material information as defined under 37 CFR 1.56(a) exists.

I hereby certify that this correspondence is being deposited today with the United States Postal Service as first class mail in an envelope addressed to Commissioner For Patents, P.O. Box 1450, Alexandria, VA 22313-1450

Cathy Wilcox — 6-16-03
Date

A PTO-1449 with cited reference is also enclosed.

This IDS is being submitted prior to receipt of a first Official Action in this matter; therefore, the undersigned respectfully submits that no fee is due for filing this IDS. Should any fees be due of which the undersigned is unaware, the Commissioner is hereby authorized to charge deposit account 23-0442 any fee deficiency required to submit this IDS.

Respectfully submitted,

Ken Lao

Kenneth Q. Lao
Registration No. 40,061

Date: 6/16/2003

WARE, FRESSOLA, VAN DER SLUYS
& ADOLPHSON LLP
Bradford Green, Building 5
755 Main Street, PO Box 224
Monroe, CT 06468
(203) 261-1234

FORM PTO-1449 INFORMATION DISCLOSURE STATEMENT	ATTY DOCKET NO. 944-001.105	SERIAL NO. 10/390,549
	APPLICANTS: Jani Lainema	
	FILING DATE: March 14, 2003	ART UNIT: 2614

OIPE JUN 1 8 2003 PATENT & TRADEMARK OFFICE

RECEIVED JUN 1 9 2003 Technology Center 2600

UNITED STATES PATENT DOCUMENTS

EXAM. INITIAL		DOCUMENT NUMBER	DATE	INVENTOR/ASSIGNEE	CLASS	SUBCLASS	FILING DATE IF APPROPRIATE

FOREIGN PATENT DOCUMENTS

		DOCUMENT NUMBER	DATE	COUNTRY	CLASS	SUBCLASS	TRANSLATION YES/NO

OTHER DOCUMENTS (INCLUDING AUTHOR, TITLE, DATE, PERTINENT PAGES, ETC.)

		"Global Motion Vector Coding (GMVC)"; Shijun Sun et al.; ITU - Telecommunications Standardization Sector, Video Coding Experts Group (VCEG); Meeting: Pattaya, Thailand, December 4-7, 2001; pp. 1-6.
		"Joint Model Number 1 (JM-1)"; Doc. JVT-A003; Joint Video Team of ISO/IEC and ITU-T VCEG; January 2002; pp. 1-79.

Examiner (To be assigned)	Date:

#5 SI 2614 19-24-03

IN THE UNITED STATES PATENT AND TRADEMARK OFFICE

Re: Application of: Jani Lainema

Attorney Docket: 944-001.105

Serial No. 10/390,549

Group Art Unit: 2614

Filed: March 14, 2003

Examiner: to be assigned

For: **METHOD FOR CODING MOTION IN A VIDEO SEQUENCE**

RECEIVED
JUL 3 0 2003
Technology Center 2600

Commissioner Of Patents
P.O. Box 1450
Alexandria, VA 22313-1450

SUPPLEMENTAL INFORMATION DISCLOSURE STATEMENT

Sir:

Further to an Information Disclosure Statement filed on June 16, 2003, applicant submits herewith references of which they are aware, which they believe may be material to the examination of this application and in respect of which they may have a duty to disclose in accordance with 37 C.F.R. 1.56.

This Supplemental Information Disclosure Statement is timely since it is certified by the undersigned that each item of information contained in the Information Disclosure Statement was first cited in any communication from a foreign patent office (copy enclosed) in a counterpart foreign application not more than three months prior to the filing of this Supplemental Information Disclosure Statement per 37 C.F.R. 1.97(c) and 37 C.F.R. 1.97 (e)(1).

Accompanying this Supplemental Information Disclosure Statement is the fee set forth in 37 C.F.R. §1.17(p).

I hereby certify that this correspondence is being deposited today with the United States Postal Service as first class mail in an envelope addressed to Commissioner of Patents, P.O. Box 1450, Alexandria, VA 22313-1450.

Cathy Wilcox 7-23-03
Date

The references are listed in the enclosed foreign search report dated July 14, 2003. A concise explanation of the relevance of each reference is specifically pointed out on page 3 of the search report. A PTO 1449 listing the cited references is also enclosed.

Respectfully submitted,

Kenneth Q. Lao
Registration No. 40,061

Date: July 23, 2003

WARE, FRESSOLA, VAN DER SLUYS
& ADOLPHSON LLP
Bradford Green, Building 5
755 Main Street, PO Box 224
Monroe, CT 06468
(203) 261-1234

FORM PTO-1449 INFORMATION DISCLOSURE STATEMENT	ATTY DOCKET NO. 944-001.105	SERIAL NO. 10/390,549
	APPLICANTS: Jani Lainema	
	FILING DATE: March 14, 2003	ART UNIT: 2614

OIPE JC22 JUL 2 8 2003 PATENT & TRADEMARK OFFICE

UNITED STATES PATENT DOCUMENTS

EXAM. INITIAL		DOCUMENT NUMBER	DATE	INVENTOR/ASSIGNEE	CLASS	SUBCLASS	FILING DATE IF APPROPRIATE
		U.S. 5,442,400	Aug. 15, 1995	Sun et al.	348	402	
		U.S. 5,701,164	Dec. 23, 1997	Kato	348	699	
		U.S. 5,191,436	Mar. 2, 1993	Yonemitsu	358	335	
		U.S. 5,148,272	Sept. 15, 1992	Acampora et al.	358	133	

RECEIVED
JUL 3 0 2003
Technology Center 2600

FOREIGN PATENT DOCUMENTS

		DOCUMENT NUMBER	DATE	COUNTRY	CLASS	SUBCLASS	TRANSLATION YES/NO

OTHER DOCUMENTS (INCLUDING AUTHOR, TITLE, DATE, PERTINENT PAGES, ETC.)

Examiner (To be assigned)	Date:

Index of Claims

Application No.	Applicant(s)
10/390549	
Examiner	**Art Unit**

√	Rejected	–	(Through numeral) Cancelled	N	Non-Elected	A	Appeal
=	Allowed	+	Restricted	I	Interference	O	Objected

Claim Final	Claim Original	Date	Claim Final	Claim Original	Date	Claim Final	Claim Original	Date
	1			51			101	
	2			52			102	
	3			53			103	
	4			54			104	
	5			55			105	
	6			56			106	
	7			57			107	
	8			58			108	
	9			59			109	
	10			60			110	
	11			61			111	
	12			62			112	
	13			63			113	
	14			64			114	
	15			65			115	
	16			66			116	
	17			67			117	
	18			68			118	
	19			69			119	
	20			70			120	
	21			71			121	
	22			72			122	
	23			73			123	
	24			74			124	
	25			75			125	
	26			76			126	
	27			77			127	
	28			78			128	
	29			79			129	
	30			80			130	
	31			81			131	
	32			82			132	
	33			83			133	
	34			84			134	
	35			85			135	
	36			86			136	
	37			87			137	
	38			88			138	
	39			89			139	
	40			90			140	
	41			91			141	
	42			92			142	
	43			93			143	
	44			94			144	
	45			95			145	
	46			96			146	
	47			97			147	
	48			98			148	
	49			99			149	
	50			100			150	

1Fc 2614

IN THE UNITED STATES PATENT AND TRADEMARK OFFICE

OIPE IAP83 JUN 25 2007 PATENT & TRADEMARK OFFICE

Re: Application of: J. Lainema

Attorney Docket: 944-001.105

Serial No.: 10/390,549

Group Art Unit: 2614

Filed: March 14, 2003

Examiner: to be assigned

For: **METHOD FOR CODING MOTION IN A VIDEO SEQUENCE**

Mail Stop Amendment
Commissioner For Patents
P.O. Box 1450
Alexandria, VA 22313-1450

SUPPLEMENTAL INFORMATION DISCLOSURE STATEMENT

Sir:

Applicant submits herewith references of which they are aware, which they believe may be material to the examination of this application and in respect of which they may have a duty to disclose in accordance with 37 C.F.R. 1.56.

While this Supplemental Information Disclosure Statement may be "material" pursuant to 37 CFR 1.56, it is not intended to constitute an admission that any document referred to herein is "prior art" for this invention unless specifically designated as such.

In accordance with 37 CFR 1.97(g), the filing of this Supplemental Information Disclosure Statement shall not be construed to mean that a search has been made or that no other material information as defined under 37 CFR 1.56(a) exists.

I hereby certify that this correspondence is being deposited today with the United States Postal Service as first class mail in an envelope addressed to Mail Stop Amendment, Commissioner for Patents, P.O. Box 1450, Alexandria, VA 22313-1450

Cathy Sturmer 6.21.07

Cathy Sturmer Date

06/25/2007 RMEBRAHT 00000057 10390549

01 FC:1806 180.00 OP

The references are listed in the enclosed foreign office actions dated January 19, 2007 (China) and April 18, 2007 (Europe). . The references are cited on page 2 of the CN office action (as highlighted), and page 2 of the EP office action. A PTO 1449 listing the cited references is also enclosed.

A check in the amount of $180.00 is enclosed for the fee under 37 C.F.R. 1.17(p). The Commissioner is hereby authorized to charge to Deposit Account 23-0442 any fee deficiency required to submit this Supplemental Information Disclosure Statement.

Respectfully submitted,

Ken Lao

Kenneth Q. Lao
Registration No. 40,061

Date: June 21, 2007

WARE, FRESSOLA, VAN DER SLUYS
& ADOLPHSON LLP
Bradford Green, Building 5
755 Main Street, PO Box 224
Monroe, CT 06468
(203) 261-1234
Customer No. 004955

FORM PTO-1449 INFORMATION DISCLOSURE STATEMENT	ATTY DOCKET NO. 944-001.105	SERIAL NO. 10/390,549
	APPLICANTS: Jani Lainema	
	FILING DATE: March 14, 2003	ART UNIT: 2614

OIPE IAP93 JUN 25 2007 PATENT & TRADEMARK OFFICE

UNITED STATES PATENT DOCUMENTS

EXAM. INITIAL		DOCUMENT NUMBER	DATE	INVENTOR/ASSIGNEE	CLASS	SUBCLASS	FILING DATE IF APPROPRIATE

FOREIGN PATENT DOCUMENTS

		DOCUMENT NUMBER	DATE	COUNTRY	CLASS	SUBCLASS	TRANSLATION YES/NO

OTHER DOCUMENTS (INCLUDING AUTHOR, TITLE, DATE, PERTINENT PAGES, ETC.)

		Acta of Zhongshan University, Vol. 40, No. 2; L. Hongmei et al.; "An Improved Multiresolution Motion Estimation Algorithm"; pp. 34-37; March 2001.
		ITU Telecommunications Standardization Sector, Doc. VCEG-N77; S. Sun et al; "Motion Vector Coding with Global Motion Parameters"; pp. 1-11; Fourteenth Meeting: Santa Barbara, CA, USA, Sept. 24-28, 2001.
		ITU Telecommunications Standardization Sector, Doc. VCEG-N16; S. Sun et al; "Core Experiment Description: Motion Vector Coding with Global Motion Parameters"; pp. 1-6; Fourteenth Meeting: Santa Barbara, CA, USA, Sept. 24-28, 2001.
		Joint Photographic Expert Group Conference, Crowborough JPEG Forum Ltd, GB, Specialists Group on Coding for Visual Telephony Joint Photographic Expert Group; "Description of Ref. Model 8 (RM8)"; pp. 1-72; June 9, 1989.

Examiner (To be assigned)	Date:

UNITED STATES PATENT AND TRADEMARK OFFICE

UNITED STATES DEPARTMENT OF COMMERCE
United States Patent and Trademark Office
Address: COMMISSIONER FOR PATENTS
P.O. Box 1450
Alexandria, Virginia 22313-1450
www.uspto.gov

APPLICATION NO.	FILING DATE	FIRST NAMED INVENTOR	ATTORNEY DOCKET NO.	CONFIRMATION NO.
10/390,549	03/14/2003	Jani Lainema	944-001.105	3966

4955 7590 07/06/2007
WARE FRESSOLA VAN DER SLUYS &
ADOLPHSON, LLP
BRADFORD GREEN, BUILDING 5
755 MAIN STREET, P O BOX 224
MONROE, CT 06468

EXAMINER
NGUYEN, HUY THANH

ART UNIT	PAPER NUMBER
2621	

MAIL DATE	DELIVERY MODE
07/06/2007	PAPER

Please find below and/or attached an Office communication concerning this application or proceeding.

The time period for reply, if any, is set in the attached communication.

Office Action Summary	Application No.	Applicant(s)	
	10/390,549	LAINEMA, JANI	
	Examiner	Art Unit	
	HUY T. NGUYEN	2621	

-- The MAILING DATE of this communication appears on the cover sheet with the correspondence address --

Period for Reply

A SHORTENED STATUTORY PERIOD FOR REPLY IS SET TO EXPIRE 3 MONTH(S) OR THIRTY (30) DAYS, WHICHEVER IS LONGER, FROM THE MAILING DATE OF THIS COMMUNICATION.

- Extensions of time may be available under the provisions of 37 CFR 1.136(a). In no event, however, may a reply be timely filed after SIX (6) MONTHS from the mailing date of this communication.
- If NO period for reply is specified above, the maximum statutory period will apply and will expire SIX (6) MONTHS from the mailing date of this communication.
- Failure to reply within the set or extended period for reply will, by statute, cause the application to become ABANDONED (35 U.S.C. § 133). Any reply received by the Office later than three months after the mailing date of this communication, even if timely filed, may reduce any earned patent term adjustment. See 37 CFR 1.704(b).

Status

1)☐ Responsive to communication(s) filed on _____.

2a)☐ This action is **FINAL**. 2b)☒ This action is non-final.

3)☐ Since this application is in condition for allowance except for formal matters, prosecution as to the merits is closed in accordance with the practice under *Ex parte Quayle*, 1935 C.D. 11, 453 O.G. 213.

Disposition of Claims

4)☒ Claim(s) 1-27 is/are pending in the application.

4a) Of the above claim(s) _____ is/are withdrawn from consideration.

5)☐ Claim(s) _____ is/are allowed.

6)☒ Claim(s) 1-27 is/are rejected.

7)☐ Claim(s) _____ is/are objected to.

8)☐ Claim(s) _____ are subject to restriction and/or election requirement.

Application Papers

9)☐ The specification is objected to by the Examiner.

10)☒ The drawing(s) filed on 14 March 2003 is/are: a)☒ accepted or b)☐ objected to by the Examiner.

Applicant may not request that any objection to the drawing(s) be held in abeyance. See 37 CFR 1.85(a).

Replacement drawing sheet(s) including the correction is required if the drawing(s) is objected to. See 37 CFR 1.121(d).

11)☐ The oath or declaration is objected to by the Examiner. Note the attached Office Action or form PTO-152.

Priority under 35 U.S.C. § 119

12)☐ Acknowledgment is made of a claim for foreign priority under 35 U.S.C. § 119(a)-(d) or (f).

a)☐ All b)☐ Some * c)☐ None of:

1.☐ Certified copies of the priority documents have been received.

2.☐ Certified copies of the priority documents have been received in Application No. _____.

3.☐ Copies of the certified copies of the priority documents have been received in this National Stage application from the International Bureau (PCT Rule 17.2(a)).

* See the attached detailed Office action for a list of the certified copies not received.

Attachment(s)

1) ☐ Notice of References Cited (PTO-892)

2) ☐ Notice of Draftsperson's Patent Drawing Review (PTO-948)

3) ☒ Information Disclosure Statement(s) (PTO/SB/08) Paper No(s)/Mail Date 7/28/03;6/18/03.

4) ☐ Interview Summary (PTO-413) Paper No(s)/Mail Date. _____ .

5) ☐ Notice of Informal Patent Application

6) ☐ Other: _____.

DETAILED ACTION

Claim Rejections - 35 USC § 103

1. The following is a quotation of 35 U.S.C. 103(a) which forms the basis for all obviousness rejections set forth in this Office action:

> (a) A patent may not be obtained though the invention is not identically disclosed or described as set forth in section 102 of this title, if the differences between the subject matter sought to be patented and the prior art are such that the subject matter as a whole would have been obvious at the time the invention was made to a person having ordinary skill in the art to which said subject matter pertains. Patentability shall not be negatived by the manner in which the invention was made.

This application currently names joint inventors. In considering patentability of the claims under 35 U.S.C. 103(a), the examiner presumes that the subject matter of the various claims was commonly owned at the time any inventions covered therein were made absent any evidence to the contrary. Applicant is advised of the obligation under 37 CFR 1.56 to point out the inventor and invention dates of each claim that was not commonly owned at the time a later invention was made in order for the examiner to consider the applicability of 35 U.S.C. 103(c) and potential 35 U.S.C. 102(e), (f) or (g) prior art under 35 U.S.C. 103(a).

2. Claims 1-27 are rejected under 35 U.S.C. 103(a) as being unpatentable over Kato 5,701,164 A in view of Sun et al (US 5,442,400 A).

Regarding claims 12 and 19, Kato discloses a video encoder arranged to encode a digital video sequence using motion compensated prediction, said digital video sequence comprising a number of frames, said encoder comprising:

means for assigning a coding mode to a segment of a first frame of the sequence to be encoded using motion compensated prediction with respect to a second frame of the sequence, wherein said coding mode is one of a set of possible modes (columns

17-18); and

means for forming a prediction for the segment, wherein said skip mode, when assigned to said segment of the first frame indicates either:

that the segment has an insignificant level of motion, in which case, said forming means forms a prediction for the segment by copying directly from a corresponding region of the second frame, or

that the segment has motion characteristic of global or regional motion in the video sequence, in which case, said forming means forms a prediction for the segment with respect to the second frame using motion information representative of said global or regional motion (column 16).

Further for claims19-27, Kato teaches a decoder for decoding the encoded signal by using motion in the frames of the encoded signal (columns 19 -20)

Kato fails to specifically teach a skip mode. Sun teaches an encoder apparatus for encoding the frames of a signal that including a skip mode and a decoder for decoding the encoded signal. (column 8, lines 50-55).

It would have been obvious to one of ordinary skill in the art to modify Kato with Sun by using the teaching of Sun for including a skip mode in encoding the signal thereby reducing processing in encoding the signal.

Regarding claim 13, Kato as modifying with Sun further teaches means for analyzing motion in a region of the first frame surrounding the segment to be encoded in order to determine a characteristic of the motion in said region (See Kato, column 16 and Sun columns 3-4).

Regarding claim 14, Kato as modified with Sun further teaches that said analyzing means is arranged to analyze motion in previously encoded segments of the first frame (See Kato column 16.)

Regarding claim 15, Kato teaches said analyzing means determines that the motion in said region has an insignificant level, the encoder is arranged to assign the skip mode as the coding mode of the segment and to associate motion information indicative of zero motion with the segment to be encoded (See Kato, column 16 and Sun columns 3-4).

Regarding claim 16, Kato teaches said analyzing means determines that the motion in said region of the first frame surrounding the segment to be encoded is characteristic of global or regional motion, the encoder is arranged to assign the skip mode as the coding mode of the segment and to associate motion information indicative of the global or regional motion in the surrounding region with the segment to be encoded (See Kato, column 16 and Sun columns 3-4, column 8, lines 50-55).

Regarding claim 17, Kato teaches said analyzing means comprises means for identifying at least one of the following types of motion: continuous motion, motion having a common velocity, and motion having a certain deviation (See Kato, column 18).

Regarding claim 18, Kato as modified with Sun further teaches said analyzing means determines that a segment of the first frame in the region of the first frame surrounding the segment to be encoded has no motion, the encoder is arranged to assign the skip mode as the coding mode (See Kato column 18, Sun column 5, lines

50-55).

Method claims 1-11 correspond to apparatus claims 12-18. Therefore method claims 1-11 are rejected by the same reason as applied to apparatus claims 12-18.

3. Any inquiry concerning this communication or earlier communications from the examiner should be directed to HUY T. NGUYEN whose telephone number is (571) 272-7378. The examiner can normally be reached on 8:30AM -6:00PM.

If attempts to reach the examiner by telephone are unsuccessful, the examiner's supervisor, John W. Miller can be reached on (571) 272-7353. The fax phone number for the organization where this application or proceeding is assigned is 571-273-8300.

Information regarding the status of an application may be obtained from the Patent Application Information Retrieval (PAIR) system. Status information for published applications may be obtained from either Private PAIR or Public PAIR. Status information for unpublished applications is available through Private PAIR only. For more information about the PAIR system, see http://pair-direct.uspto.gov. Should you have questions on access to the Private PAIR system, contact the Electronic Business Center (EBC) at 866-217-9197 (toll-free). If you would like assistance from a USPTO Customer Service Representative or access to the automated information system, call 800-786-9199 (IN USA OR CANADA) or 571-272-1000.

H.N

HUY NGUYEN
PRIMARY EXAMINER

FORM PTO-1449 INFORMATION DISCLOSURE STATEMENT	ATTY DOCKET NO. 944-001.105	SERIAL NO. 10/390,549
	APPLICANTS: Jani Lainema	
	FILING DATE: March 14, 2003	ART UNIT: 2614

OIPE JC22 JUL 2 8 2003 PATENT & TRADEMARK OFFICE

UNITED STATES PATENT DOCUMENTS

EXAM. INITIAL		DOCUMENT NUMBER	DATE	INVENTOR/ASSIGNEE	CLASS	SUBCLASS	FILING DATE IF APPROPRIATE
KW		U.S. 5,442,400	Aug. 15, 1995	Sun et al.	348	402	
KW		U.S. 5,701,164	Dec. 23, 1997	Kato	348	699	
KW		U.S. 5,191,436	Mar. 2, 1993	Yonemitsu	358	335	
KW		U.S. 5,148,272	Sept. 15, 1992	Acampora et al.	358	133	

RECEIVED
JUL 3 0 2003
Technology Center 2600

FOREIGN PATENT DOCUMENTS

		DOCUMENT NUMBER	DATE	COUNTRY	CLASS	SUBCLASS	TRANSLATION YES/NO

OTHER DOCUMENTS (INCLUDING AUTHOR, TITLE, DATE, PERTINENT PAGES, ETC.)

Examiner (To be assigned) Thuy Nguyen Date: 6/23/07

FORM PTO-1449 INFORMATION DISCLOSURE STATEMENT	ATTY DOCKET NO. 944-001.105	SERIAL NO. 10/390,549
	APPLICANTS: Jani Lainema	
	FILING DATE: March 14, 2003	ART UNIT: ~~2614~~ 2621

OIPE JUN 1 8 2003 PATENT & TRADEMARK OFFICE

UNITED STATES PATENT DOCUMENTS

EXAM. INITIAL		DOCUMENT NUMBER	DATE	INVENTOR/ASSIGNEE	CLASS	SUBCLASS	FILING DATE IF APPROPRIATE

RECEIVED JUN 1 9 2003 Technology Center 2600

FOREIGN PATENT DOCUMENTS

		DOCUMENT NUMBER	DATE	COUNTRY	CLASS	SUBCLASS	TRANSLATION YES/NO

OTHER DOCUMENTS (INCLUDING AUTHOR, TITLE, DATE, PERTINENT PAGES, ETC.)

/H.N./		"Global Motion Vector Coding (GMVC)"; Shijun Sun et al.; ITU - Telecommunications Standardization Sector, Video Coding Experts Group (VCEG); Meeting: Pattaya, Thailand, December 4-7, 2001; pp. 1-6.
/H.N./		"Joint Model Number 1 (JM-1)"; Doc. JVT-A003; Joint Video Team of ISO/IEC and ITU-T VCEG; January 2002; pp. 1-79.

Examiner (To be assigned) /Huy Nguyen/	Date: 06/23/2007

Search Notes	Application/Control No.	Applicant(s)/Patent under Reexamination
	10/390,549	LAINEMA, JANI
	Examiner	Art Unit
	HUY T. NGUYEN	2621

SEARCHED			
Class	Subclass	Date	Examiner
386	68	6/23/07	HN
	111		
	112		
	95		
348	466		
	699		
375	240.15		

INTERFERENCE SEARCHED			
Class	Subclass	Date	Examiner

SEARCH NOTES (INCLUDING SEARCH STRATEGY)		
	DATE	EXMR

Index of Claims

Application/Control No.	Applicant(s)/Patent under Reexamination
10/390,549	LAINEMA, JANI
Examiner	**Art Unit**
HUY T. NGUYEN	2621

√	Rejected	–	(Through numeral) Cancelled	N	Non-Elected	A	Appeal
=	Allowed	÷	Restricted	I	Interference	O	Objected

Claim		Date							
Final	Original	12/3/07							
	1	√							
	2								
	3								
	4								
	5								
	6								
	7								
	8								
	9								
	10								
	11								
	12								
	13								
	14								
	15								
	16								
	17								
	18								
	19								
	20								
	21								
	22								
	23								
	24								
	25								
	26								
	27	√							
	28								
	29								
	30								
	31								
	32								
	33								
	34								
	35								
	36								
	37								
	38								
	39								
	40								
	41								
	42								
	43								
	44								
	45								
	46								
	47								
	48								
	49								
	50								

Claim		Date							
Final	Original								
	51								
	52								
	53								
	54								
	55								
	56								
	57								
	58								
	59								
	60								
	61								
	62								
	63								
	64								
	65								
	66								
	67								
	68								
	69								
	70								
	71								
	72								
	73								
	74								
	75								
	76								
	77								
	78								
	79								
	80								
	81								
	82								
	83								
	84								
	85								
	86								
	87								
	88								
	89								
	90								
	91								
	92								
	93								
	94								
	95								
	96								
	97								
	98								
	99								
	100								

Claim		Date							
Final	Original								
	101								
	102								
	103								
	104								
	105								
	106								
	107								
	108								
	109								
	110								
	111								
	112								
	113								
	114								
	115								
	116								
	117								
	118								
	119								
	120								
	121								
	122								
	123								
	124								
	125								
	126								
	127								
	128								
	129								
	130								
	131								
	132								
	133								
	134								
	135								
	136								
	137								
	138								
	139								
	140								
	141								
	142								
	143								
	144								
	145								
	146								
	147								
	148								
	149								
	150								

OIPE IAP70
NOV 0 1 2007
PATENT & TRADEMARK OFFICE

IN THE UNITED STATES PATENT AND TRADEMARK OFFICE

Re: Application of: Jani Lainema

Attorney Docket: 944-001.105

Serial No. 10/390,549

Group Art Unit: 2621

Filed: March 14, 2003

Examiner: Huy Thanh Nguyen

For: **METHOD FOR CODING MOTION IN A VIDEO SEQUENCE**

Mailstop Amendment
Commissioner Of Patents
P.O. Box 1450
Alexandria, VA 22313-1450

AMENDMENT IN RESPONSE TO NON-FINAL OFFICE ACTION

(Paper No. 20070623)

Sir:

In response to the non-final office action, mailed July 6, 2007, please amend the patent application as follows:

******If any fee and/or extension is required in addition to any enclosed herewith, please charge Account No. 23-0442.***

CERTIFICATE OF MAILING/TRANSMISSION (37 C.F.R. § 1.8(a))

I hereby certify that this correspondence is, on the date shown below, being:

MAILING

☒ Deposited with the United States Postal Service with sufficient postage as first class Mail in an envelope addressed to the Commissioner for Patents, PO Box 1450, Alexandria, VA 22313-1450.

FACSIMILE

☐ Transmitted by facsimile to the U.S. Patent and Trademark Office.

Date: Oct. 30, 2007

Signature
Marie E. Forte
(type or print name of person certifying)

11/02/2007 EEKUBAY1 00000022 10390549
01 FC:1202 1900.00 OP

Claim Amendments

Please cancel claims 2, 9, 13, 20, 27, amend claims 1-8, 10-12, 14-19 and 21-26, and add new claims 28-70 as follows:

1. (Currently Amended) A method of ~~motion compensated prediction for use in~~ encoding ~~of a digital~~ video sequence~~, said digital video sequence comprising a number of frames, said~~ the method comprising ~~the steps of~~:

assigning a skip coding mode to a first segment of a first frame of the sequence; ~~sequence to be encoded using motion compensated prediction with respect to a second frame of the sequence, said coding mode being one of a set of possible coding modes including a skip mode, wherein said skip mode, when assigned to said segment of the first frame, indicates either~~

assigning either a zero motion vector or a predicted non-zero motion vector for the skip coding mode for the first segment based at least in part on the motion information of a second segment neighboring the first segment; and

~~(i) that the segment has an insignificant level of motion, in which case,~~ forming a prediction for the first segment with respect to a reference ~~by copying directly from a corresponding region of the second frame, or~~ frame based at least in part on the assigned motion vector; and

providing in an encoded bitstream an indication of the skip coding mode, wherein no further motion vector information for the first segment is coded in the encoded bitstream.

~~(ii) that the segment has a motion characteristic of global or regional motion in the video sequence, in which case, forming a prediction for the segment by motion compensated prediction with respect to the second frame using motion information representative of said global or regional motion.~~

2. (Canceled)

3. (Currently Amended) A method according to ~~claim 3~~claim 1, wherein ~~said region of the first frame surrounding~~ the second segment ~~to be encoded comprises~~ is a previously encoded ~~segment~~ neighboring the first segment.~~of the first frame.~~

4. (Currently Amended) A method according to ~~claim 2~~claim 1, wherein if ~~it is determined that~~ the motion in ~~said~~ the second ~~region of the first frame surrounding the~~ segment ~~to be encoded~~ has an insignificant level of motion, the zero motion vector is assigned to the skip coding ~~skip~~ mode for ~~is assigned as the coding mode of~~ the first segment and the prediction for the first segment is formed with respect to a corresponding segment of the reference frame associated with the zero motion vector.~~motion information indicative of zero motion is associated with the segment.~~

5. (Currently Amended) A method according to ~~claim 2~~claim 1, wherein if ~~it is determined that~~ the motion in ~~said~~ the ~~region of the first frame surrounding the~~second segment ~~to be encoded is~~ has a motion characteristic of a global or a regional motion,

the method further comprising:

deriving the predicted non-zero motion vector based at least in part on the motion vector of the second segment; and

the predicted non-zero motion vector ~~the skip mode~~ is assigned [[as]] to the skip coding mode of the first segment and the prediction for the first segment is formed by a motion compensated prediction with respect to the reference frame based at least in part on the predicted non-zero motion vector.~~motion information indicative of the global or regional motion in the surrounding region is associated with the segment.~~

6. (Currently Amended) A method according to ~~claim 2~~claim 1, further comprising: ~~wherein said~~ performing an analysis ~~comprises examining said~~of motion of a region ~~of the first frame~~ surrounding ~~said~~ the first segment;~~segment to be encoded in order to identify~~

if it is determined that the region surrounding the first segment has at least one of the following types of motion: continuous motion, motion having a common velocity, and motion having a certain ~~deviation.~~deviation,

the method further comprising deriving the predicted non-zero motion vector based at least in part on the motion vector of the second segment; and

the predicted non-zero motion vector is assigned for the skip coding mode of the first segment, and the prediction for the first segment is formed by a motion compensated prediction with respect to the reference frame based at least in part on the predicted non-zero motion vector; and

otherwise, the zero motion vector is assigned for the skip coding mode of the first segment, and the prediction for the first segment is formed with respect to a corresponding segment of the reference frame associated with the zero motion vector.

7. (Currently Amended) A method according to ~~claim 2~~claim 1, wherein if ~~a segment of the first frame in the region of the first frame surrounding the segment to be encoded has no~~ the second segment has zero motion vector, the zero motion vector is assigned for skip coding mode ~~is assigned as the coding mode~~ of the first segment and the prediction for the first segment is formed with respect to a corresponding segment of the reference frame associated with the zero motion vector. ~~motion information indicative of zero motion is associated with the segment.~~

8. (Currently Amended) A method of ~~motion compensated prediction for use in decoding of an encoded digital video sequence, said digital video sequence comprising a number of frames, said method comprising the steps of:~~decoding an encoded video sequence, the method comprising:

receiving an indication of a skip coding mode for a first segment; and ~~receiving an indication of a coding mode assigned to a segment of a first frame of the sequence decoded using motion compensated prediction with respect to a second frame of the sequence, said coding mode being one of a set of possible coding modes including a skip mode; and~~

~~determining, when said skip mode is indicated as the coding mode assigned to said segment of the first frame,~~

~~(i) whether said skip mode indicates that the segment has an insignificant level of motion, in which case, motion compensated prediction for the segment is performed by copying directly from a corresponding region of the second frame, or~~

~~(ii) whether said skip mode indicates that the segment has motion characteristic of global or regional motion in the video sequence, in which case motion compensated prediction for the segment is performed with respect to the second frame using motion information representative of said global or regional motion.~~

assigning either a zero motion vector or a predicted non-zero motion vector for the skip coding mode for the first segment based at least in part on the motion information of a second segment neighboring the first segment; and

forming a prediction for the first segment with respect to a reference frame based at least in part on the assigned motion vector.

9. (Canceled)

10. (Currently Amended) A method according to ~~claim 9~~claim 8, further comprising; ~~wherein said analysis comprises~~

performing an analysis of motion of ~~examining the previously decoded region~~ a region surrounding the first segment; ~~of the first frame surrounding said segment to be decoded in order to identify~~

if it is determined that the region surrounding the first segment has at least one of the following types of motion: continuous motion, motion having a common velocity, and motion having a certain deviation, ~~wherein if said at least one type of motion is identified in said surrounding region, it is determined that the skip mode indicates that the segment to be decoded has motion characteristic of global or regional motion in the video sequence.~~

the method further comprising deriving the predicted non-zero motion vector based at least in part on the motion vector of the second segment; and

the predicted non-zero motion vector is assigned for the skip coding mode of the first segment; and the prediction for the first segment is formed by a motion compensated prediction with respect to the reference frame based at least in part on the predicted non-zero motion vector; and

otherwise, the zero motion vector is assigned for the skip coding mode of the first segment, and the prediction for the first segment is formed with respect to a corresponding segment of the reference frame associated with the zero motion vector.

11. (Currently Amended) A method according to ~~claim 9~~claim 8, wherein if a segment ~~of the first frame in the previously decoded region of the first frame surrounding the segment to be encoded has no motion,~~ in a previously decoded region of the first frame surrounding the first segment has zero motion vector, the zero-motion vector is assigned to the skip coding mode of the first segment and the prediction for the first segment is formed with respect to a corresponding segment of the reference frame associated with the zero motion vector. ~~it is determined that the skip mode indicates that the segment to be decoded has an insignificant level of motion.~~

12. (Currently Amended) A video encoder for encoding a video sequence, the encoder comprises: ~~arranged to encode a digital video sequence using motion compensated prediction, said digital video sequence comprising a number of frames, said encoder comprising:~~

a coding controller for assigning a skip coding mode to a first segment; ~~means for assigning a coding mode to a segment of a first frame of the sequence to be encoded using motion compensated prediction with respect to a second frame of the sequence, wherein said coding mode is one of a set of possible modes including a skip mode; and~~

a motion estimation block for assigning either a zero motion vector or a predicted non-zero motion vector for the skip coding mode for the first segment based at least in part on the motion information of a second segment neighboring the first segment; and

~~means for~~ forming a prediction for the first segment with respect to a reference frame based at least in part on the assigned motion-vector; and ~~, wherein said skip mode, when assigned to said segment of the first frame indicates either~~

a multiplexer for providing in an encoded bitstream an indication of the skip coding mode, wherein no further motion vector information for the first segment is coded in the encoded bitstream.

~~(i) that the segment has an insignificant level of motion, in which case, said forming means forms a prediction for the segment by copying directly from a corresponding region of the second frame, or~~

~~(ii) that the segment has motion characteristic of global or regional motion in the video sequence, in which case, said forming means forms a prediction for the segment with respect to the second frame using motion information representative of said global or regional motion.~~

13. (Canceled)

14. (Currently Amended) An encoder according to ~~claim 13~~ claim 12, wherein the second segment is a previously encoded segment neighboring the first segment. ~~, wherein said analyzing means is arranged to analyze motion in previously encoded segments of the first frame.~~

15. (Currently Amended) An encoder according to claim ~~13, wherein if said analyzing means determines that the motion in said region~~ 12, wherein if the second segment has an insignificant level of motion, the ~~encoder~~ motion estimation block is arranged to assign the zero motion vector for the skip coding mode of the first segment ~~as the coding mode of the segment~~ and the prediction for the first segment is formed with respect to a corresponding segment of the reference frame associated with the zero motion vector.~~to associate motion information indicative of zero motion with the segment to be encoded.~~

16. (Currently Amended) An encoder according to claim ~~13, wherein said analyzing means determines that~~ 12, wherein if the second segment has a motion characteristic of a global or a

regional motion,~~the motion in said region of the first frame surrounding the segment to be encoded is characteristic of global or regional motion,~~

the ~~encoder is arranged to~~ motion estimation block is arranged to derive the predicted non-zero motion vector based at least in part on the motion vector of the second segment; and

the predicted non-zero motion vector is assigned to the skip coding mode of the first segment and the prediction for the first segment is formed by a motion compensated prediction with respect to the reference frame based at least in part on the predicted non-zero motion vector.~~assign the skip mode as the coding mode of the segment and to associate motion information indicative of the global or regional motion in the surrounding region with the segment to be encoded.~~

17. (Currently Amended) An encoder according to claim ~~13, wherein said analyzing means comprises means for identifying~~ 12, wherein the motion estimation block is arranged to perform an analysis of motion of a region surrounding the first segment;

if it is determined that the region surrounding the first segment has at least one of the following types of motion: continuous motion, motion having a common velocity, and motion having a certain deviation

the motion estimation block is further arranged to derive a predicted non-zero motion vector based at least in part on the motion vector of the second segment; and

the predicted non-zero motion vector is assigned for the skip coding mode of the first segment, and the prediction for the first segment is formed by a motion compensated prediction with respect to the reference frame based at least in part on the predicted non-zero motion vector; and

otherwise, the zero motion vector is assigned for the skip coding mode of the first segment, and the prediction for the first segment is formed with respect to a corresponding segment of the reference frame associated with the zero motion vector.

18. (Currently Amended) An encoder according to ~~claim 13~~claim 12, wherein if ~~said analyzing means determines that~~ a segment ~~of the first frame in the region of the first frame~~in a

region surrounding the first segment ~~to be encoded~~ has ~~no~~ zero motion vector, the encoder is arranged to assign the zero motion vector for the skip coding mode of the first segment ~~as the coding mode of the segment~~ and the prediction for the first segment is formed with respect to a corresponding segment of the reference frame associated with the zero motion vector.~~and to associate motion information indicative of zero motion with the segment to be encoded.~~

19. (Currently Amended) A video decoder ~~arranged to~~for decoding ~~decode~~ an encoded ~~digital~~ video sequence ~~using motion compensated prediction, said digital video sequence comprising a number of frames, said decoder comprising:~~, the decoder comprising:

a demultiplexer ~~means~~ for receiving an indication of a skip coding mode assigned to a first segment ~~of a first frame of the sequence encoded using motion compensated prediction with respect to a second frame of the sequence, said coding mode being one of a set of possible coding modes including a skip mode~~

a motion compensated prediction block for

assigning either a zero motion vector or a predicted non-zero motion vector for the skip coding mode for the first segment based in part on the motion information of a second segment neighboring the first segment; and

~~means for~~ forming a prediction for the first segment with respect to a reference frame based at least in part on the assigned motion vector.~~, wherein when said skip mode is indicated as the coding mode assigned to said segment of the first frame, the decoder is arranged to determine~~

~~(i) whether said skip mode indicates that the segment has an insignificant level of motion, in which case said forming means forming the prediction for the segment by copying directly from a corresponding region of the second frame, or~~

~~(ii) whether said skip mode indicates that the segment has motion characteristic of global or regional motion in the video sequence, in which case said forming means forming the prediction for the segment by motion compensated prediction with respect to the second frame using motion information representative of said global or regional motion.~~

20. (Canceled)

21. (Currently Amended) A decoder according to ~~claim 20~~ claim 19, wherein if ~~said analyzing means determines that~~the ~~motion in said region~~second segment has an insignificant level of motion, the ~~encoder~~decoder is arranged to assign the zero-motion vector to the skip coding mode for the first segment and the prediction for the first segment is formed with respect to a corresponding segment of the reference frame associated with the zero motion vector.~~associate motion information indicative of zero motion with the segment to be decoded.~~

22. (Currently Amended) A decoder according to ~~claim 20~~claim 19, wherein if ~~said analyzing means determines that the motion in said region is~~the second segment has a motion characteristic of a global or a regional motion, the decoder is arranged to derive the predicted non-zero motion vector based at least in part on the motion vector of the second segment; and the predicted non-zero motion vector is assigned to the skip coding mode of the first segment and the prediction for the first segment is formed by a motion compensated prediction with respect to the reference frame based at least in part on the predicted non-zero motion vector. ~~associate motion information indicative of the global or regional motion in the surrounding region with the segment to be decoded.~~

23. (Currently Amended) A decoder according to ~~claim 20~~claim 19, wherein the motion compensated prediction block ~~said analyzing means comprises means for~~is configured to perform an analysis of motion of a region surrounding the first segment; and

if it is determined that the region surrounding the first segment has ~~identifying~~ at least one of the following types of motion: continuous motion, motion having a common velocity, motion having a certain deviation[[.]] [[,]]

the motion compensated prediction block further configured to derive a predicted non-zero motion vector based at least in part on the motion vector of the second segment; and

the predicted non-zero motion vector is assigned for the skip coding mode of the first segment, and the prediction for the first segment is formed by a motion compensated prediction with respect to the reference frame based at least in part on the predicted non-zero motion vector; and

otherwise, the zero motion vector is assigned for the skip coding mode of the first segment, and the prediction for the first segment is formed with respect to a corresponding segment of the reference frame associated with the zero motion vector.

24. (Currently Amended) A decoder according to ~~claim 20~~claim 19, wherein if a segment in a region surrounding the first segment has zero motion vector, the zero motion vector is assigned for the skip coding mode of the first segment, and the prediction for the first segment is formed with respect to a corresponding segment of the reference frame associated with the zero motion vector.~~said analyzing means determines that a previously decoded segment of the first frame in said region has no motion, the decoder is arranged to associate motion information indicative of zero motion with the segment to be decoded.~~

25. (Currently Amended) A multimedia terminal, comprising an encoder according to claim 12.

~~means for obtaining a digital video sequence; and~~

~~a video encoder arranged to encode the digital video sequence using motion compensated prediction, said digital video sequence comprising a number of frames, wherein the video encoder comprises:~~

~~means for assigning a coding mode to a segment of a first frame of the sequence to be encoded using motion compensated prediction with respect to a second frame of the sequence, wherein said coding mode is one of a set of possible modes including a skip mode; and~~

~~means for forming a prediction for the segment, wherein said skip mode, when assigned to said segment of the first frame, indicates either~~

~~(i) that the segment has an insignificant level of motion, in which case, the video encoder is arranged such that said forming means forms a prediction for the segment by copying directly from a corresponding region of the second frame, or~~

~~(ii) that the segment has motion characteristic of global or regional motion in the video sequence, in which case, the video encoder is arranged such that said forming means forms a prediction for the segment with respect to the second frame using motion information representative of said global or regional motion.~~

26. (Currently Amended) A multimedia terminal comprising a decoder according to claim 19.[[:]]

~~means for acquiring an encoded digital video sequence; and~~

~~a video decoder arranged to decode the encoded digital video sequence using motion compensated prediction, said digital video sequence comprising a number of frames, said decoder comprising:~~

~~means for receiving an indication of a coding mode assigned to a segment of a first frame of the sequence encoded using motion compensated prediction with respect to a second frame of the sequence, said coding mode being one of a set of possible coding modes including a skip mode; and~~

~~means for forming a prediction for the segment, wherein when said skip mode is indicated as the coding mode assigned to said segment of the first frame, the decoder is arranged to determine~~

~~(i) whether said skip mode indicates that the segment has an insignificant level of motion, in which case said forming means forming the prediction for the segment by copying directly from a corresponding region of the second frame, or~~

~~(ii) whether said skip mode indicates that the segment has motion characteristic of global or regional motion in the video sequence, in which case said forming means forming the prediction for the segment by motion compensated prediction with respect to the second frame using motion information representative of said global or regional motion.~~

27. (Canceled)

28. (New) A method according to claim 1, wherein if the second segment has a non-zero motion vector,

the method further comprising deriving the predicted non-zero motion vector based at least in part on the motion vector of the second segment; and

the predicted non-zero motion vector is assigned for the skip coding mode of the first segment; and the prediction for the first segment is formed by a motion compensated prediction with respect to the reference frame based at least in part on the predicted non-zero motion vector.

29. (New) A method according to claim 1, wherein if the second segment has a zero motion vector and the second segment is predicted using motion-compensated prediction from the reference picture, the zero motion vector is assigned to the skip coding mode of the first segment and the prediction for the first segment is formed with respect to a corresponding segment of the reference frame associated with the zero motion vector.

30. (New) A method according to claim 1, wherein if the second segment has a zero motion vector and the second segment is predicted using motion-compensated prediction from a second reference picture immediately preceding the picture second segment belongs to, the zero motion vector is assigned to the skip coding mode of the first segment and the prediction for the first segment is formed with respect to a corresponding segment of the reference frame associated with the zero motion vector.

31. (New) A method according to claim 1, further comprising:

performing an analysis of motion information of the second segment and motion information of a third segment neighboring the first segment; and

determining whether a region surrounding the first segment has a global or a regional motion in a video sequence based at least in part on a characteristic of the motion vector of the second segment and the motion vector of the third segment.

32. (New) A method according to claim 31, wherein if the region surrounding the first segment has a global or a regional motion in a video sequence,

the method further comprising deriving the predicted non-zero motion vector based at least in part on the motion vector of the second segment and the motion vector of the third segment; and

the predicted non-zero motion vector is assigned for the skip coding mode of the first segment; and the prediction for the first segment is formed by a motion compensated prediction with respect to the reference frame based at least in part on the predicted non-zero motion vector.

33. (New) A method according to claim 1, further comprising:

deriving the predicted non-zero motion vector based at least in part on the motion vector of the second segment.

34. (New) A method according to claim 1, further comprising:

deriving the predicted non-zero motion vector based at least in part on the motion vector of the second segment and motion vector of a third segment neighboring the first segment.

35. (New) A method according to claim 1, wherein no residual information is provided for the first segment in the encoded bitstream.

36. (New) A method according to claim 1, further comprising:

deriving a predicted motion vector based at least in part on the motion vector of the second segment and motion vector of a third segment neighboring the first segment; and

if any component of the predicted motion vector has an absolute value larger than a certain threshold value, the predicted motion vector is assigned for the skip coding mode of the

first segment, and the prediction for the first segment is formed by a motion compensated prediction with respect to the reference frame based at least in part on the predicted motion vector; and

if none of components of the predicted motion vector has an absolute value larger than the certain threshold value, the zero motion vector is assigned for the skip coding mode of the first segment, and the prediction for the first segment is formed with respect to a corresponding segment of the reference frame associated with the zero motion vector.

37. (New) A method according to claim 8, wherein if the second segment has a zero motion vector, the zero motion vector is assigned to the skip coding mode of the first segment and the prediction for the first segment is formed with respect to a corresponding segment of the reference frame associated with the zero motion vector.

38. (New) A method according to claim 8, wherein if the second segment has an insignificant level of motion, the zero motion vector is assigned to the skip coding mode of the first segment and the prediction for the first segment is formed with respect to a corresponding segment of the reference frame associated with the zero motion vector .

39. (New) A method according to claim 8, wherein if the second segment has a non-zero motion vector,

the method further comprising deriving the predicted non-zero motion vector based at least in part on the motion vector of the second segment; and

the predicted non-zero motion vector is assigned for the skip coding mode of the first segment; and the prediction for the first segment is formed by a motion compensated prediction with respect to the reference frame based at least in part on the predicted non-zero motion vector.

40. (New) A method according to claim 8, characterized in that if the second segment has a motion characteristic of a global or a regional motion,

the method further comprising deriving the predicted non-zero motion vector based at least in part on the motion vector of the second segment; and

the predicted non-zero motion vector is assigned to the skip coding mode of the first segment and the prediction for the first segment is formed by a motion compensated prediction with respect to the reference frame based at least in part on the predicted non-zero motion vector.

41. (New) A method according to claim 8, wherein if the second segment has a zero motion vector and the second segment is predicted using motion-compensated prediction from the reference picture, the zero motion vector is assigned to the skip coding mode of the first segment and the prediction for the first segment is formed with respect to a corresponding segment of the reference frame associated with the zero motion vector.

42. (New) A method according to claim 8, further comprising:

performing an analysis of motion information of the second segment and motion information of a third segment neighboring the first segment;

determining whether a region surrounding the first segment has a global or a regional motion in a video sequence based at least in part on a characteristic of the motion vector of the second segment and the motion vector of the third segment.

43. (New) A method according to claim 42, wherein if the region surrounding the first segment has a global or a regional motion in a video sequence,

the method further comprising deriving the predicted non-zero motion vector based at least in part on the motion vector of the second segment and the motion vector of the third segment; and

the predicted non-zero motion vector is assigned for the skip coding mode of the first segment; and the prediction for the first segment is formed by a motion compensated prediction with respect to the reference frame based at least in part on the predicted non-zero motion vector.

44. (New) A method according to claim 8, further comprising:

deriving the predicted non-zero motion vector based at least in part on the motion vector of the second segment.

45. (New) A method according to claim 8, further comprising:

deriving the predicted non-zero motion vector based at least in part on the motion vector of the second segment and motion vector of a third segment neighboring the first segment.

46. (New) A method according to claim 8, wherein no residual information is provided for the first segment in the encoded bitstream.

47. (New) A method according to claim 8, further comprising:

deriving a predicted motion vector based at least in part on the motion vector of the second segment and motion vector of a third segment neighboring the first segment; and

if any component of the predicted motion vector has an absolute value larger than a certain threshold value, the predicted motion vector is assigned for the skip coding mode of the first segment, and the prediction for the first segment is formed by a motion compensated prediction with respect to the reference frame based at least in part on the predicted motion vector; and

if none of components of the predicted motion vector has an absolute value larger than the certain threshold value, the zero motion vector is assigned for the skip coding mode of the first segment, and the prediction for the first segment is formed with respect to a corresponding segment of the reference frame associated with the zero motion vector.

48. (New) A method according to claim 8, wherein if the second segment has a zero motion vector and the second segment is predicted using motion-compensated prediction from a second reference picture immediately preceding the picture second segment belongs to, the zero motion vector is assigned to the skip coding mode of the first segment and the prediction for the first segment is formed with respect to a corresponding segment of the reference frame associated with the zero motion vector.

49. (New) An encoder according to claim 12, wherein if the second segment has a non-zero motion vector,

the motion estimation block is further arranged to derive the predicted non-zero motion vector based at least in part on the motion vector of the second segment; and

the predicted non-zero motion vector is assigned for the skip coding mode for the first segment; and the prediction for the first segment is formed by a motion compensated prediction with respect to the reference frame based at least in part on the predicted non-zero motion vector.

50. (New) An encoder according to claim 12, further wherein the motion estimation block is further arranged to:

perform an analysis of motion information of the second segment and motion information of a third segment neighboring the first segment;

determine whether a region surrounding the first segment has a global or a regional motion in a video sequence based at least in part on a characteristic of the motion vector of the second segment and the motion vector of the third segment.

51. (New) An encoder according to claim 50, wherein if the region surrounding the first segment has a global or a regional motion in a video sequence,

the motion estimation block further arranged to derive the predicted non-zero motion vector based at least in part on the motion vector of the second segment and the motion vector of the third segment; and

the predicted non-zero motion vector is assigned for the skip coding mode for the first segment; and the prediction for the first segment is formed by a motion compensated prediction with respect to the reference frame based at least in part on the predicted non-zero motion vector.

52. (New) An encoder according to claim 12, wherein the motion estimation block further arranged to derive the predicted non-zero motion vector based at least in part on the motion vector of the second segment.

53. (New) An encoder according to claim 12, wherein the motion estimation block further arranged to derive the predicted non-zero motion vector based at least in part on the motion vector of the second segment and motion vector of a third segment neighboring the first segment.

54. (New) An encoder according to claim 12, wherein no residual information is provided for the first segment in the encoded bitstream.

55. (New) An encoder according to claim 12, wherein the motion estimation block further arranged to derive a predicted motion vector based at least in part on the motion vector of the second segment and motion vector of a third segment neighboring the first segment; and

if any component of the predicted motion vector has an absolute value larger than a certain threshold value, the predicted motion vector is assigned for the skip coding mode of the first segment, and the prediction for the first segment is formed by a motion compensated prediction with respect to the reference frame based at least in part on the predicted motion vector; and

if none of components of the predicted motion vector has an absolute value larger than the certain threshold value, the zero motion vector is assigned for the skip coding mode of the first segment, and the prediction for the first segment is formed with respect to a corresponding segment of the reference frame associated with the zero motion vector.

56. (New) An encoder according to claim 12, wherein if the second segment has a zero motion vector, the zero motion vector is assigned to the skip coding mode of the first segment and the prediction for the first segment is formed with respect to a corresponding segment of the reference frame associated with the zero motion vector.

57. (New) An encoder according to claim 12, wherein if the second segment has a zero motion vector and the second segment is predicted using motion-compensated prediction from the reference picture, the zero motion vector is assigned to the skip coding mode of the first

segment and the prediction for the first segment is formed with respect to a corresponding segment of the reference frame associated with the zero motion vector.

58. (New) An encoder according to claim 12, wherein if the second segment has a zero motion vector and the second segment is predicted using motion-compensated prediction from a second reference picture immediately preceding the picture second segment belongs to, the zero motion vector is assigned to the skip coding mode of the first segment and the prediction for the first segment is formed with respect to a corresponding segment of the reference frame associated with the zero motion vector.

59. (New) A decoder according to claim 19, wherein if the second segment has a zero motion vector, the zero-motion vector is assigned to the skip coding mode for the first segment and the prediction for the first segment is formed with respect to a corresponding segment of the reference frame associated with the zero motion vector.

60. (New) A decoder according to claim 19, wherein if the second segment has a non-zero motion vector,

the motion compensated prediction block further arranged to derive the predicted non-zero motion vector based at least in part on the motion vector of the second segment; and

the predicted non-zero motion vector is assigned for the skip coding mode for the first segment; and the prediction for the first segment is formed by a motion compensated prediction with respect to the reference frame based at least in part on the predicted non-zero motion vector.

61. (New) A decoder according to claim 19, wherein the motion estimation block further arranged to:

perform an analysis of motion information of the second segment and motion information of a third segment neighboring the first segment;

determine whether a region surrounding the first segment has a global or a regional motion in a video sequence based at least in part on a characteristic of the motion vector of the second segment and the motion vector of the third segment.

62. (New) A decoder according to claim 61, wherein if the region surrounding the first segment has a global or a regional motion in a video sequence,

the motion estimation block further arranged to derive the predicted non-zero motion vector based at least in part on the motion vector of the second segment and the motion vector of the third segment; and

the predicted non-zero motion vector is assigned for the skip coding mode for the first segment; and the prediction for the first segment is formed by a motion compensated prediction with respect to the reference frame based at least in part on the predicted non-zero motion vector.

63. (New) A decoder according to claim 19, wherein the motion estimation block further arranged to derive the predicted non-zero motion vector based at least in part on the motion vector of the second segment.

64. (New) A decoder according to claim 19, wherein the motion estimation block further arranged to derive the predicted non-zero motion vector based at least in part on the motion vector of the second segment and motion vector of a third segment neighboring the first segment.

65. (New) A decoder according to claim 19, wherein no residual information is provided for the first segment in an encoded bitstream.

66. (New) A decoder according to claim 19, wherein the motion estimation block further arranged to derive a predicted motion vector based at least in part on the motion vector of the second segment and motion vector of a third segment neighboring the first segment; and

if any component of the predicted motion vector has an absolute value larger than a certain threshold value, the predicted motion vector is assigned for the skip coding mode of the

first segment, and the prediction for the first segment is formed by a motion compensated prediction with respect to the reference frame based at least in part on the predicted motion vector; and

if none of components of the predicted motion vector has an absolute value larger than the certain threshold value, the zero motion vector is assigned for the skip coding mode of the first segment, and the prediction for the first segment is formed with respect to a corresponding segment of the reference frame associated with the zero motion vector.

67. (New) A decoder according to claim 19, wherein if the second segment has a zero motion vector and the second segment is predicted using motion-compensated prediction from the reference picture, the zero motion vector is assigned to the skip coding mode of the first segment and the prediction for the first segment is formed with respect to a corresponding segment of the reference frame associated with the zero motion vector.

68. (New) A decoder according to claim 19, wherein if the second segment has a zero motion vector and the second segment is predicted using motion-compensated prediction from a second reference picture immediately preceding the picture second segment belongs to, the zero motion vector is assigned to the skip coding mode of the first segment and the prediction for the first segment is formed with respect to a corresponding segment of the reference frame associated with the zero motion vector.

69. (New) A decoder according to claim 19, wherein no further motion vector information for the first segment is retrieved from an encoded bitstream.

70. (New) A method according to claim 8, wherein no further motion vector information for the first segment is retrieved from the encoded bitstream.

Clean Version

1. (currently amended) A method of encoding a video sequence, the method comprising:

assigning a skip coding mode to a first segment of a first frame of the sequence;

assigning either a zero motion vector or a predicted non-zero motion vector for the skip coding mode for the first segment based at least in part on the motion information of a second segment neighboring the first segment; and

forming a prediction for the first segment with respect to a reference frame based at least in part on the assigned motion vector; and

providing in an encoded bitstream an indication of the skip coding mode, wherein no further motion vector information for the first segment is coded in the encoded bitstream.

2. (canceled)

3. (currently amended) A method according to claim 1, wherein the second segment is a previously encoded segment neighboring the first segment.

4. (currently amended) A method according to claim 1, wherein if the motion in the second segment has an insignificant level of motion, the zero motion vector is assigned to the skip coding mode for the first segment and the prediction for the first segment is formed with respect to a corresponding segment of the reference frame associated with the zero motion vector.

5. (currently amended) A method according to claim 1, wherein if the motion in the second segment has a motion characteristic of a global or a regional motion,

the method further comprising:

deriving the predicted non-zero motion vector based at least in part on the motion vector of the second segment; and

the predicted non-zero motion vector is assigned to the skip coding mode of the first segment and the prediction for the first segment is formed by a motion compensated prediction with respect to the reference frame based at least in part on the predicted non-zero motion vector.

6. (currently amended) A method according to claim 1, further comprising:

performing an analysis of motion of a region surrounding the first segment;

if it is determined that the region surrounding the first segment has at least one of the following types of motion: continuous motion, motion having a common velocity, and motion having a certain deviation,

the method further comprising deriving the predicted non-zero motion vector based at least in part on the motion vector of the second segment; and

the predicted non-zero motion vector is assigned for the skip coding mode of the first segment, and the prediction for the first segment is formed by a motion compensated prediction with respect to the reference frame based at least in part on the predicted non-zero motion vector; and

otherwise, the zero motion vector is assigned for the skip coding mode of the first segment, and the prediction for the first segment is formed with respect to a corresponding segment of the reference frame associated with the zero motion vector.

7. (currently amended) A method according to claim 1, wherein if the second segment has zero motion vector, the zero motion vector is assigned for skip coding mode of the first segment and the prediction for the first segment is formed with respect to a corresponding segment of the reference frame associated with the zero motion vector.

8. (currently amended) A method of decoding an encoded video sequence, the method comprising:

receiving an indication of a skip coding mode for a first segment;

assigning either a zero motion vector or a predicted non-zero motion vector for the skip coding mode for the first segment based at least in part on the motion information of a second segment neighboring the first segment; and

forming a prediction for the first segment with respect to a reference frame based at least in part on the assigned motion vector.

9. (canceled).

10. (currently amended) A method according to claim 8, further comprising:

performing an analysis of motion of a region surrounding the first segment;

if it is determined that the region surrounding the first segment has at least one of the following types of motion: continuous motion, motion having a common velocity, and motion having a certain deviation,

the method further comprising deriving the predicted non-zero motion vector based at least in part on the motion vector of the second segment; and

the predicted non-zero motion vector is assigned for the skip coding mode of the first segment; and the prediction for the first segment is formed by a motion compensated prediction with respect to the reference frame based at least in part on the predicted non-zero motion vector; and

otherwise, the zero motion vector is assigned for the skip coding mode of the first segment, and the prediction for the first segment is formed with respect to a corresponding segment of the reference frame associated with the zero motion vector.

11. (currently amended) A method according to claim 8, wherein if a segment in a previously decoded region surrounding the first segment has zero motion vector, the zero-motion vector is assigned to the skip coding mode of the first segment and the prediction for the first segment is formed with respect to a corresponding segment of the reference frame associated with the zero motion vector.

12. (currently amended) A video encoder for encoding a video sequence, the encoder comprises:

a coding controller for assigning a skip coding mode to a first segment;

a motion estimation block for

assigning either a zero motion vector or a predicted non-zero motion vector for the skip coding mode for the first segment based at least in part on the motion information of a second segment neighboring the first segment; and

forming a prediction for the first segment with respect to a reference frame based at least in part on the assigned motion-vector; and

a multiplexer for providing in an encoded bitstream an indication of the skip coding mode, wherein no further motion vector information for the first segment is coded in the encoded bitstream.

13. (canceled)

14. (currently amended) An encoder according to claim 12, wherein the second segment is a previously encoded segment neighboring the first segment.

15. (currently amended) An encoder according to claim 12, wherein if the second segment has an insignificant level of motion, the motion estimation block is arranged to assign the zero motion vector for the skip coding mode of the first segment and the prediction for the first segment is formed with respect to a corresponding segment of the reference frame associated with the zero motion vector.

16. (currently amended) An encoder according to claim 12, wherein if the second segment has a motion characteristic of a global or a regional motion,

the motion estimation block is arranged to derive the predicted non-zero motion vector based at least in part on the motion vector of the second segment; and

the predicted non-zero motion vector is assigned to the skip coding mode of the first segment and the prediction for the first segment is formed by a motion compensated prediction with respect to the reference frame based at least in part on the predicted non-zero motion vector.

17. (currently amended) An encoder according to claim 12, wherein the motion estimation block is arranged to perform an analysis of motion of a region surrounding the first segment;

if it is determined that the region surrounding the first segment has at least one of the following types of motion: continuous motion, motion having a common velocity, and motion having a certain deviation

the motion estimation block is further arranged to derive a predicted non-zero motion vector based at least in part on the motion vector of the second segment; and

the predicted non-zero motion vector is assigned for the skip coding mode of the first segment, and the prediction for the first segment is formed by a motion compensated prediction with respect to the reference frame based at least in part on the predicted non-zero motion vector; and

otherwise, the zero motion vector is assigned for the skip coding mode of the first segment, and the prediction for the first segment is formed with respect to a corresponding segment of the reference frame associated with the zero motion vector.

18. (currently amended) An encoder according to claim 12, wherein if a segment in a region surrounding the first segment has zero motion vector, the encoder is arranged to assign the zero motion vector for the skip coding mode of the first segment and the prediction for the first segment is formed with respect to a corresponding segment of the reference frame associated with the zero motion vector.

19. (currently amended) A video decoder for decoding an encoded video sequence, the decoder comprising:

a demultiplexer for receiving an indication of a skip coding mode assigned to a first segment;

a motion compensated prediction block for

assigning either a zero motion vector or a predicted non-zero motion vector for the skip coding mode for the first segment based at least in part on the motion information of a second segment neighboring the first segment; and

forming a prediction for the first segment with respect to a reference frame based at least in part on the assigned motion vector.

20. (canceled)

21. (currently amended) A decoder according to claim 19, wherein if the second segment has an insignificant level of motion, the decoder is arranged to assign the zero-motion vector to the skip coding mode for the first segment and the prediction for the first segment is formed with respect to a corresponding segment of the reference frame associated with the zero motion vector.

22. (currently amended) A decoder according to claim 19, wherein

if the second segment has a motion characteristic of a global or a regional motion, the decoder is arranged to derive the predicted non-zero motion vector based at least in part on the motion vector of the second segment; and

the predicted non-zero motion vector is assigned to the skip coding mode of the first segment and the prediction for the first segment is formed by a motion compensated prediction with respect to the reference frame based at least in part on the predicted non-zero motion vector.

23. (currently amended) A decoder according to claim 19, wherein the motion compensated prediction block is configured to perform an analysis of motion of a region surrounding the first segment; and

if it is determined that the region surrounding the first segment has at least one of the following types of motion: continuous motion, motion having a common velocity, motion having a certain deviation,

the motion compensated prediction block further configured to derive a predicted non-zero motion vector based at least in part on the motion vector of the second segment; and

the predicted non-zero motion vector is assigned for the skip coding mode of the first segment, and the prediction for the first segment is formed by a motion compensated prediction with respect to the reference frame based at least in part on the predicted non-zero motion vector; and

otherwise, the zero motion vector is assigned for the skip coding mode of the first segment, and the prediction for the first segment is formed with respect to a corresponding segment of the reference frame associated with the zero motion vector.

24. (currently amended) A decoder according to claim 19, wherein if a segment in a region surrounding the first segment has zero motion vector, the zero motion vector is assigned for the skip coding mode of the first segment, and the prediction for the first segment is formed with respect to a corresponding segment of the reference frame associated with the zero motion vector.

25. (currently amended) A multimedia terminal, comprising an encoder according to claim 12.

26. (currently amended) A multimedia terminal comprising a decoder according to claim 19.

27. (canceled)

28. (new) A method according to claim 1, wherein if the second segment has a non-zero motion vector,

the method further comprising deriving the predicted non-zero motion vector based at least in part on the motion vector of the second segment; and

the predicted non-zero motion vector is assigned for the skip coding mode of the first segment; and the prediction for the first segment is formed by a motion compensated prediction with respect to the reference frame based at least in part on the predicted non-zero motion vector.

29. (new) A method according to claim 1, wherein if the second segment has a zero motion vector and the second segment is predicted using motion-compensated prediction from the reference picture, the zero motion vector is assigned to the skip coding mode of the first segment and the prediction for the first segment is formed with respect to a corresponding segment of the reference frame associated with the zero motion vector.

30. (new) A method according to claim 1, wherein if the second segment has a zero motion vector and the second segment is predicted using motion-compensated prediction from a second reference picture immediately preceding the picture second segment belongs to, the zero motion vector is assigned to the skip coding mode of the first segment and the prediction for the first segment is formed with respect to a corresponding segment of the reference frame associated with the zero motion vector.

31. (new) A method according to claim 1, further comprising:

performing an analysis of motion information of the second segment and motion information of a third segment neighboring the first segment; and

determining whether a region surrounding the first segment has a global or a regional motion in a video sequence based at least in part on a characteristic of the motion vector of the second segment and the motion vector of the third segment.

32. (new) A method according to claim 31, wherein if the region surrounding the first segment has a global or a regional motion in a video sequence,

the method further comprising deriving the predicted non-zero motion vector based at least in part on the motion vector of the second segment and the motion vector of the third segment; and

the predicted non-zero motion vector is assigned for the skip coding mode of the first segment; and the prediction for the first segment is formed by a motion compensated prediction with respect to the reference frame based at least in part on the predicted non-zero motion vector.

33. (new) A method according to claim 1, further comprising:

deriving the predicted non-zero motion vector based at least in part on the motion vector of the second segment.

34. (new) A method according to claim 1, further comprising:

deriving the predicted non-zero motion vector based at least in part on the motion vector of the second segment and motion vector of a third segment neighboring the first segment.

35. (new) A method according to claim 1, wherein no residual information is provided for the first segment in the encoded bitstream.

36. (new) A method according to claim 1, further comprising:

deriving a predicted motion vector based at least in part on the motion vector of the second segment and motion vector of a third segment neighboring the first segment; and

if any component of the predicted motion vector has an absolute value larger than a certain threshold value, the predicted motion vector is assigned for the skip coding mode of the first segment, and the prediction for the first segment is formed by a motion compensated prediction with respect to the reference frame based at least in part on the predicted motion vector; and

if none of components of the predicted motion vector has an absolute value larger than the certain threshold value, the zero motion vector is assigned for the skip coding mode of the first segment, and the prediction for the first segment is formed with respect to a corresponding segment of the reference frame associated with the zero motion vector.

37. (new) A method according to claim 8, wherein if the second segment has a zero motion vector, the zero motion vector is assigned to the skip coding mode of the first segment and the prediction for the first segment is formed with respect to a corresponding segment of the reference frame associated with the zero motion vector.

38. (new) A method according to claim 8, wherein if the second segment has an insignificant level of motion, the zero motion vector is assigned to the skip coding mode of the first segment and the prediction for the first segment is formed with respect to a corresponding segment of the reference frame associated with the zero motion vector .

39. (new) A method according to claim 8, wherein if the second segment has a non-zero motion vector,

the method further comprising deriving the predicted non-zero motion vector based at least in part on the motion vector of the second segment; and

the predicted non-zero motion vector is assigned for the skip coding mode of the first segment; and the prediction for the first segment is formed by a motion compensated prediction with respect to the reference frame based at least in part on the predicted non-zero motion vector.

40. (new) A method according to claim 8, characterized in that if the second segment has a motion characteristic of a global or a regional motion,

the method further comprising deriving the predicted non-zero motion vector based at least in part on the motion vector of the second segment; and

the predicted non-zero motion vector is assigned to the skip coding mode of the first segment and the prediction for the first segment is formed by a motion compensated prediction with respect to the reference frame based at least in part on the predicted non-zero motion vector.

41. (new) A method according to claim 8, wherein if the second segment has a zero motion vector and the second segment is predicted using motion-compensated prediction from the reference picture, the zero motion vector is assigned to the skip coding mode of the first segment and the prediction for the first segment is formed with respect to a corresponding segment of the reference frame associated with the zero motion vector.

42. (new) A method according to claim 8, further comprising:

performing an analysis of motion information of the second segment and motion information of a third segment neighboring the first segment;

determining whether a region surrounding the first segment has a global or a regional motion in a video sequence based at least in part on a characteristic of the motion vector of the second segment and the motion vector of the third segment.

43. (new) A method according to claim 42, wherein if the region surrounding the first segment has a global or a regional motion in a video sequence,

the method further comprising deriving the predicted non-zero motion vector based at least in part on the motion vector of the second segment and the motion vector of the third segment; and

the predicted non-zero motion vector is assigned for the skip coding mode of the first segment; and the prediction for the first segment is formed by a motion compensated prediction with respect to the reference frame based at least in part on the predicted non-zero motion vector.

44. (new) A method according to claim 8, further comprising:

deriving the predicted non-zero motion vector based at least in part on the motion vector of the second segment.

45. (new) A method according to claim 8, further comprising:

deriving the predicted non-zero motion vector based at least in part on the motion vector of the second segment and motion vector of a third segment neighboring the first segment.

46. (new) A method according to claim 8, wherein no residual information is provided for the first segment in the encoded bitstream.

47. (new) A method according to claim 8, further comprising:

deriving a predicted motion vector based at least in part on the motion vector of the second segment and motion vector of a third segment neighboring the first segment; and

if any component of the predicted motion vector has an absolute value larger than a certain threshold value, the predicted motion vector is assigned for the skip coding mode of the first segment, and the prediction for the first segment is formed by a motion compensated prediction with respect to the reference frame based at least in part on the predicted motion vector; and

if none of components of the predicted motion vector has an absolute value larger than the certain threshold value, the zero motion vector is assigned for the skip coding mode of the first segment, and the prediction for the first segment is formed with respect to a corresponding segment of the reference frame associated with the zero motion vector.

48. (new) A method according to claim 8, wherein if the second segment has a zero motion vector and the second segment is predicted using motion-compensated prediction from a second reference picture immediately preceding the picture second segment belongs to, the zero motion vector is assigned to the skip coding mode of the first segment and the prediction for the first segment is formed with respect to a corresponding segment of the reference frame associated with the zero motion vector.

49. (new) An encoder according to claim 12, wherein if the second segment has a non-zero motion vector,

the motion estimation block is further arranged to derive the predicted non-zero motion vector based at least in part on the motion vector of the second segment; and

the predicted non-zero motion vector is assigned for the skip coding mode for the first segment; and the prediction for the first segment is formed by a motion compensated prediction with respect to the reference frame based at least in part on the predicted non-zero motion vector.

50. (new) An encoder according to claim 12, further wherein the motion estimation block is further arranged to:

perform an analysis of motion information of the second segment and motion information of a third segment neighboring the first segment;

determine whether a region surrounding the first segment has a global or a regional motion in a video sequence based at least in part on a characteristic of the motion vector of the second segment and the motion vector of the third segment.

51. (new) An encoder according to claim 50, wherein if the region surrounding the first segment has a global or a regional motion in a video sequence,

the motion estimation block further arranged to derive the predicted non-zero motion vector based at least in part on the motion vector of the second segment and the motion vector of the third segment; and

the predicted non-zero motion vector is assigned for the skip coding mode for the first segment; and the prediction for the first segment is formed by a motion compensated prediction with respect to the reference frame based at least in part on the predicted non-zero motion vector.

52. (new) An encoder according to claim 12, wherein the motion estimation block further arranged to derive the predicted non-zero motion vector based at least in part on the motion vector of the second segment.

53. (new) An encoder according to claim 12, wherein the motion estimation block further arranged to derive the predicted non-zero motion vector based at least in part on the motion vector of the second segment and motion vector of a third segment neighboring the first segment.

54. (new) An encoder according to claim 12, wherein no residual information is provided for the first segment in the encoded bitstream.

55. (new) An encoder according to claim 12, wherein the motion estimation block further arranged to derive a predicted motion vector based at least in part on the motion vector of the second segment and motion vector of a third segment neighboring the first segment; and

if any component of the predicted motion vector has an absolute value larger than a certain threshold value, the predicted motion vector is assigned for the skip coding mode of the

first segment, and the prediction for the first segment is formed by a motion compensated prediction with respect to the reference frame based at least in part on the predicted motion vector; and

if none of components of the predicted motion vector has an absolute value larger than the certain threshold value, the zero motion vector is assigned for the skip coding mode of the first segment, and the prediction for the first segment is formed with respect to a corresponding segment of the reference frame associated with the zero motion vector.

56. (new) An encoder according to claim 12, wherein if the second segment has a zero motion vector, the zero motion vector is assigned to the skip coding mode of the first segment and the prediction for the first segment is formed with respect to a corresponding segment of the reference frame associated with the zero motion vector.

57. (new) An encoder according to claim 12, wherein if the second segment has a zero motion vector and the second segment is predicted using motion-compensated prediction from the reference picture, the zero motion vector is assigned to the skip coding mode of the first segment and the prediction for the first segment is formed with respect to a corresponding segment of the reference frame associated with the zero motion vector.

58. (new) An encoder according to claim 12, wherein if the second segment has a zero motion vector and the second segment is predicted using motion-compensated prediction from a second reference picture immediately preceding the picture second segment belongs to, the zero motion vector is assigned to the skip coding mode of the first segment and the prediction for the first segment is formed with respect to a corresponding segment of the reference frame associated with the zero motion vector.

59. (new) A decoder according to claim 19, wherein if the second segment has a zero motion vector, the zero-motion vector is assigned to the skip coding mode for the first segment and the

prediction for the first segment is formed with respect to a corresponding segment of the reference frame associated with the zero motion vector.

60. (new) A decoder according to claim 19, wherein if the second segment has a non-zero motion vector,

the motion compensated prediction block further arranged to derive the predicted non-zero motion vector based at least in part on the motion vector of the second segment; and

the predicted non-zero motion vector is assigned for the skip coding mode for the first segment; and the prediction for the first segment is formed by a motion compensated prediction with respect to the reference frame based at least in part on the predicted non-zero motion vector.

61. (new) A decoder according to claim 19, wherein the motion estimation block further arranged to:

perform an analysis of motion information of the second segment and motion information of a third segment neighboring the first segment;

determine whether a region surrounding the first segment has a global or a regional motion in a video sequence based at least in part on a characteristic of the motion vector of the second segment and the motion vector of the third segment.

62. (new) A decoder according to claim 61, wherein if the region surrounding the first segment has a global or a regional motion in a video sequence,

the motion estimation block further arranged to derive the predicted non-zero motion vector based at least in part on the motion vector of the second segment and the motion vector of the third segment; and

the predicted non-zero motion vector is assigned for the skip coding mode for the first segment; and the prediction for the first segment is formed by a motion compensated prediction with respect to the reference frame based at least in part on the predicted non-zero motion vector.

63. (new) A decoder according to claim 19, wherein the motion estimation block further arranged to derive the predicted non-zero motion vector based at least in part on the motion vector of the second segment.

64. (new) A decoder according to claim 19, wherein the motion estimation block further arranged to derive the predicted non-zero motion vector based at least in part on the motion vector of the second segment and motion vector of a third segment neighboring the first segment.

65. (new) A decoder according to claim 19, wherein no residual information is provided for the first segment in an encoded bitstream.

66. (new) A decoder according to claim 19, wherein the motion estimation block further arranged to derive a predicted motion vector based at least in part on the motion vector of the second segment and motion vector of a third segment neighboring the first segment; and

if any component of the predicted motion vector has an absolute value larger than a certain threshold value, the predicted motion vector is assigned for the skip coding mode of the first segment, and the prediction for the first segment is formed by a motion compensated prediction with respect to the reference frame based at least in part on the predicted motion vector; and

if none of components of the predicted motion vector has an absolute value larger than the certain threshold value, the zero motion vector is assigned for the skip coding mode of the first segment, and the prediction for the first segment is formed with respect to a corresponding segment of the reference frame associated with the zero motion vector.

67. (new) A decoder according to claim 19, wherein if the second segment has a zero motion vector and the second segment is predicted using motion-compensated prediction from the reference picture, the zero motion vector is assigned to the skip coding mode of the first segment and the prediction for the first segment is formed with respect to a corresponding segment of the reference frame associated with the zero motion vector.

68. (new) A decoder according to claim 19, wherein if the second segment has a zero motion vector and the second segment is predicted using motion-compensated prediction from a second reference picture immediately preceding the picture second segment belongs to, the zero motion vector is assigned to the skip coding mode of the first segment and the prediction for the first segment is formed with respect to a corresponding segment of the reference frame associated with the zero motion vector.

69. (new) A decoder according to claim 19, wherein no further motion vector information for the first segment is retrieved from an encoded bitstream.

70. (new) A method according to claim 8, wherein no further motion vector information for the first segment is retrieved from the encoded bitstream.

REMARKS

In the patent application, claims 1-27 are pending. In the office action, all pending claims are rejected.

Application has canceled claims 2, 9, 13, 20, 27, amended claims 1-8, 10-12, 14-19 and 21-26, and added new claims 28-70.

Among the newly added claims, claims 28-36 are dependent from the independent encoding method claim 1; claims 37-48 and 70 are dependent from the independent decoding method claim 8; claims 25 and 49-58 are dependent from the independent encoder claim 12; and claims 26 and 59-69 are dependent from the independent decoder claim 19. Furthermore, claim 32 is dependent from claim 31; claim 43 is dependent from claim 42; claim 51 is dependent from claim 50; and claim 62 is dependent from claim 61.

The support for the amended claims and the newly added claims can be found in the summary section (p.20, line 28 to p.21, line 15); the description of the encoder (p.25, line 29 to p.26, line 19); and the description of the decoder (p.31, lines 15-31). The terms "macroblock", "sub-block" and "segment" are used interchangeably in the specification and in the claims.

No new matter has been introduced.

At section 3 of the office action, claims 1-27 are rejected under U.S. U.S.C. 103(a) as being unpatentable over *Kato* (U.S. Patent No. 5,701,164 A1), in view of *Sun et al.* (U.S. Patent No. 5,442,400 A, hereafter referred to as *Sun*).

In the rejection independent claims 12 and 19, the Examiner states that *Kato* discloses a video encoder and decoder as claimed, except that *Kato* fails to specifically teach a skip mode, but points to *Sun* for disclosing the skip mode (col.8, lines 50-55).

It is respectfully submitted that, at col.8, lines 52 to 60, *Sun* discloses:

> The MPEG-like signal format allows the encoding of some macroblocks to be skipped. For macroblocks that are skipped, the decoder effectively copies them from the previous picture into the present picture, or alternatively, for skipped macroblocks the

corresponding areas of the video display RAM 318 simply are not updated. Macroblock skipping may be accomplished by coding the motion vectors with zero values and the DCT coefficients with all zero values.

The SKIP mode, as disclosed in *Sun*, is the same SKIP mode as adopted in JM1 of the JVT codec (p.14, lines 19-29; p.15, lines 14-25 of the specification). This SKIP mode is also known as the eighth coding mode for the JM1 of the JVT codec. If this SKIP mode is assigned to a macroblock, this indicates that macroblock is to be copied from the reference video frame without using the motion compensated prediction (p.15, lines 14-16 of the specification).

The present invention provides a different skip mode for improving the compression performance.

The encoding method that is used in the encoder, according to the claimed invention, has the following limitations:

assigning a skip coding mode to a first segment of a first frame of the sequence;

assigning either a zero motion vector or a predicted non-zero motion vector for the skip coding mode for the first segment based at least in part on the motion information of a second segment neighboring the first segment; and

forming a prediction for the first segment with respect to a reference frame based at least in part on the assigned motion vector; and

providing in an encoded bitstream an indication of the skip coding mode, wherein no further motion vector information for the first segment is coded in the encoded bitstream.

Likewise, the decoding method that is used in the decoder, according to the claimed invention, has the following limitations:

receiving an indication of a skip coding mode for a first segment;

assigning either a zero motion vector or a predicted non-zero motion vector for the skip coding mode for the first segment based at least in part on the motion information of a second segment neighboring the first segment; and

forming a prediction for the first segment with respect to a reference frame based at least in part on the assigned motion vector.

According to the claimed invention, when a skip coding mode is assigned to a segment, the vector assigned for the skip coding mode can be a zero motion vector, or a predicted non-zero motion vector at least partially based on the motion information of a neighboring segment.

Sun is different from the claimed invention at least in two aspects: 1) *Sun* does not disclose assigning a predicted non-zero motion vector for the skip mode; and 2) *Sun* does not disclose assigning the vector based on the motion information of a neighboring segment.

For the above reasons, *Kato*, in view of *Sun*, fails to render the independent claims 12 and 19 obvious.

The Examiner rejects the independent method claims 1 and 8 based on the same ground. Thus, for reasons regarding claims 12 and 19 above, *Kato*, in view of *Sun*, also fails to render the independent apparatus claims 12 and 19 obvious.

As for claims 3-7, 10, 11, 14-18, 21-26 and 28-70, they are dependent from claims 1, 8, 12 and 19. For reasons regarding claims 1, 8, 12 and 19 above, *Kato*, in view of *Sun*, also fails to render claims 3-7, 10, 11, 14-18, 21-26 and 28-70 obvious.

CONCLUSION

Claims 1, 3-8, 10-12, 14-19, 21-26 and 28-70 are allowable. Early allowance of claims 1, 3-8, 10-12, 14-19, 21-26 and 28-70 is earnestly solicited.

Respectfully submitted,

Cathy Sturmer
Registration No. 60,869

Date: October 30, 2007

WARE, FRESSOLA, VAN DER SLUYS
& ADOLPHSON LLP
Bradford Green, Building 5
755 Main Street, PO Box 224
Monroe, CT 06468
(203) 261-1234

OIPE IAP70
NOV 0 1 2007
PATENT & TRADEMARK OFFICE

IFW 2621

Attorney Docket No. 944-001.105
Serial No. 10/390,549

Practitioner's Docket No. 944-001.105 ***PATENT***

IN THE UNITED STATES PATENT AND TRADEMARK OFFICE

In re application of: **Jani Lainema**

Application No.: **10/390,549** Group No.: **2621**

Filed: **March 14, 2003** Examiner: **Huy Thanh Nguyen**

For: **METHOD FOR CODING MOTION IN A VIDEO SEQUENCE**

Mailstop Amendments
Commissioner for Patents
Patent and Trademark Office
P.O. Box 1450
Alexandria, Virginia 22313-1450

AMENDMENT TRANSMITTAL

1. Transmitted herewith is an Amendment for this application.

STATUS

2. Applicant is
   - ☐ a small entity. A statement:
     - ☐ is attached.
     - ☐ was already filed.
   - ☒ other than a small entity.

******If any fee and/or extension is required in addition to any enclosed herewith, please charge Account No. 23-0442.***

CERTIFICATE OF MAILING/TRANSMISSION (37 C.F.R. § 1.8(a))

I hereby certify that this correspondence is, on the date shown below, being:

MAILING	FACSIMILE
☒ Deposited with the United States Postal Service with sufficient postage as first class Mail in an envelope addressed to the Commissioner for Patents, PO Box 1450, Alexandria, VA 22313-1450.	☐ Transmitted by facsimile to the U.S. Patent and Trademark Office.

Date: Oct. 30, 2007

Marie E. Forte
Signature
Marie E. Forte
(type or print name of person certifying)

11/02/2007 EEKUBAY1 00000021 10390549
01 FC:1251 120.00 OP

EXTENSION OF TERM

NOTE: "Extension of Time in Patent Cases (Supplement Amendments) - If a timely and complete response has been filed after a Non-Final Office Action, an extension of time is not required to permit filing and/or entry of an additional amendment after expiration of the shortened statutory period.

If a timely response has been filed after a Final Office Action, an extension of time is required to permit filing and/or entry of a Notice of Appeal or filing and/or entry of an additional amendment after expiration of the shortened statutory period unless the timely-filed response placed the application in condition for allowance. Of course, if a Notice of Appeal has been filed within the shortened statutory period, the period has ceased to run." Notice of December 10, 1985 (1061 O.G. 34-35).

NOTE: See 37 C.F.R. §1.645 for extensions of time in interference proceedings, and 37 C.F.R. §1.550(c) for extensions of time in reexamination proceedings.

3. The proceedings herein are for a patent application and the provisions of 37 C.F.R. §1.136 apply.

(complete (a) or (b), as applicable)

(a) ☒ Applicant petitions for an extension of time under 37 C.F.R. §1.136 (fees: 37 C.F.R. §1.17(a)(1)-(4)) for the total number of months checked below:

Extension (months)	Fee for other than small entity	Fee for small entity
☒ one month	$ 120.00	$ 60.00
☐ two months	$ 450.00	$225.00
☐ three months	$ 1,020.00	$510.00
☐ four months	$1,590.00	$795.00

Fee: $ **120.00**

If an additional extension of time is required, please consider this a petition therefor.

(check and complete the next item, if applicable)

☐An extension for ____ months has already been secured. The fee paid therefor of $ _ is deducted from the total fee due for the total months of extension now requested.

Extension fee due with this request $ **120.00**

OR

(b) ☐ Applicant believes that no extension of term is required. However, this conditional petition is being made to provide for the possibility that applicant has

inadvertently overlooked the need for a petition for extension of time.

FEE FOR CLAIMS

4. The fee for claims (37 C.F.R. §1.16(b)-(d)) has been calculated as shown below:

(Col. 1)			(Col. 2)		(Col. 3)	SMALL ENTITY			OTHER THAN A SMALL ENTITY	
CLAIMS REMAINING AFTER AMENDMENT			HIGHEST NO. PREVIOUSLY PAID FOR		PRESENT EXTRA	RATE	ADDIT. FEE	*OR*	RATE	ADDIT. FEE
TOTAL:	65	MINUS	27	=	38	x $50 =$			x 50 =	**$1,900.00**
INDEP:	5	MINUS	7	=		x $100 = $			x210 =	$
☐ FIRST PRESENTATION OF MULTIPLE DEP. CLAIM						+$180 = $			+$360 =	$
							TOTAL ADDL. FEE $			TOTAL ADDL. FEE **$1,900.00**

WARNING: "After final rejection or action (§1.113) amendments may be made cancelling claims or complying with any requirement of form which has been made." 37 C.F.R. §1.116(a) (emphasis added).

(complete (c) or (d), as applicable)

(c) ☐ No additional fee for claims is required.

OR

(d) ☒ Total additional fee for claims required is **$1,900.00.**

FEE PAYMENT

5. ☒ Attached is a check in the sum of $ **2,020.00**

☐Charge Account No. _____ the sum of $_____. A duplicate of this transmittal is attached.

FEE DEFICIENCY

NOTE: If there is a fee deficiency and there is no authorization to charge an account, additional fees are necessary to cover the additional time consumed in making up the original deficiency. If the maximum six-month period has expired before the deficiency is noted and corrected, the application is held abandoned. In those instances where authorization to charge is included, processing delays are encountered in returning the papers to the PTO Finance Branch in order to apply these charges prior to action on the cases. Authorization to charge the deposit account for any fee deficiency should be checked. See the Notice of April 7, 1986 (1065 O.G. 31-33).

6. ☒ If any additional extension and/or fee is required, charge Account No. 23-0442.

AND/OR

☒ If any additional fee for claims is required, charge Account No. 23-0442.

SIGNATURE OF PRACTITIONER

Cathy Sturmer
Attorney for Applicant(s)
Reg. No.: **60,869**

Telephone No.: **(203) 261-1234**

Ware, Fressola, Van Der Sluys & Adolphson LLP
Bradford Green, Building Five
755 Main Street, P.O. Box 224
Monroe, Connecticut 06468

Customer No.: **004955**

PTO/SB/06 (07-06)
Approved for use through 1/31/2007. OMB 0651-0032
U.S. Patent and Trademark Office; U.S. DEPARTMENT OF COMMERCE
Under the Paperwork Reduction Act of 1995, no persons are required to respond to a collection of information unless it displays a valid OMB control number.

PATENT APPLICATION FEE DETERMINATION RECORD

Substitute for Form PTO-875

Application or Docket Number	Filing Date	☐ To be Mailed
10/390,549	03/14/2003	

APPLICATION AS FILED – PART I

FOR	(Column 1) NUMBER FILED	(Column 2) NUMBER EXTRA	SMALL ENTITY ☐ RATE ($)	SMALL ENTITY FEE ($)	OR	OTHER THAN SMALL ENTITY RATE ($)	OTHER THAN SMALL ENTITY FEE ($)
☐ BASIC FEE (37 CFR 1.16(a), (b), or (c))	N/A	N/A	N/A			N/A	
☐ SEARCH FEE (37 CFR 1.16(k), (i), or (m))	N/A	N/A	N/A			N/A	
☐ EXAMINATION FEE (37 CFR 1.16(o), (p), or (q))	N/A	N/A	N/A			N/A	
TOTAL CLAIMS (37 CFR 1.16(i))	minus 20 =	*	X $ =		OR	X $ =	
INDEPENDENT CLAIMS (37 CFR 1.16(h))	minus 3 =	*	X $ =			X $ =	
☐ APPLICATION SIZE FEE (37 CFR 1.16(s))	If the specification and drawings exceed 100 sheets of paper, the application size fee due is $250 ($125 for small entity) for each additional 50 sheets or fraction thereof. See 35 U.S.C. 41(a)(1)(G) and 37 CFR 1.16(s).						
☐ MULTIPLE DEPENDENT CLAIM PRESENT (37 CFR 1.16(j))							
* If the difference in column 1 is less than zero, enter "0" in column 2.			TOTAL			TOTAL	

APPLICATION AS AMENDED – PART II

AMENDMENT 11/01/2007	(Column 1) CLAIMS REMAINING AFTER AMENDMENT		(Column 2) HIGHEST NUMBER PREVIOUSLY PAID FOR	(Column 3) PRESENT EXTRA	SMALL ENTITY RATE ($)	SMALL ENTITY ADDITIONAL FEE ($)	OR	OTHER THAN SMALL ENTITY RATE ($)	OTHER THAN SMALL ENTITY ADDITIONAL FEE ($)
Total (37 CFR 1.16(i))	* 65	Minus	** 77	= 0	X $ =		OR	X $50=	0
Independent (37 CFR 1.16(h))	* 4	Minus	***7	= 0	X $ =		OR	X $210=	0
☐ Application Size Fee (37 CFR 1.16(s))									
☐ FIRST PRESENTATION OF MULTIPLE DEPENDENT CLAIM (37 CFR 1.16(j))							OR		
					TOTAL ADD'L FEE		OR	TOTAL ADD'L FEE	0

AMENDMENT	(Column 1) CLAIMS REMAINING AFTER AMENDMENT		(Column 2) HIGHEST NUMBER PREVIOUSLY PAID FOR	(Column 3) PRESENT EXTRA	RATE ($)	ADDITIONAL FEE ($)	OR	RATE ($)	ADDITIONAL FEE ($)
Total (37 CFR 1.16(i))	*	Minus	**	=	X $ =		OR	X $ =	
Independent (37 CFR 1.16(h))	*	Minus	***	=	X $ =		OR	X $ =	
☐ Application Size Fee (37 CFR 1.16(s))									
☐ FIRST PRESENTATION OF MULTIPLE DEPENDENT CLAIM (37 CFR 1.16(j))							OR		
					TOTAL ADD'L FEE		OR	TOTAL ADD'L FEE	

* If the entry in column 1 is less than the entry in column 2, write "0" in column 3.
** If the "Highest Number Previously Paid For" IN THIS SPACE is less than 20, enter "20".
*** If the "Highest Number Previously Paid For" IN THIS SPACE is less than 3, enter "3".
The "Highest Number Previously Paid For" (Total or Independent) is the highest number found in the appropriate box in column 1.

Legal Instrument Examiner:
Cassandra B. Paris

This collection of information is required by 37 CFR 1.16. The information is required to obtain or retain a benefit by the public which is to file (and by the USPTO to process) an application. Confidentiality is governed by 35 U.S.C. 122 and 37 CFR 1.14. This collection is estimated to take 12 minutes to complete, including gathering, preparing, and submitting the completed application form to the USPTO. Time will vary depending upon the individual case. Any comments on the amount of time you require to complete this form and/or suggestions for reducing this burden, should be sent to the Chief Information Officer, U.S. Patent and Trademark Office, U.S. Department of Commerce, P.O. Box 1450, Alexandria, VA 22313-1450. DO NOT SEND FEES OR COMPLETED FORMS TO THIS ADDRESS. **SEND TO: Commissioner for Patents, P.O. Box 1450, Alexandria, VA 22313-1450.**
If you need assistance in completing the form, call 1-800-PTO-9199 and select option 2.

EAST Search History

Ref #	Hits	Search Query	DBs	Default Operator	Plurals	Time Stamp
L1	1	(zero near2 motion) same (non adj2 zero) same ((neighbor$4 or surround$4) with segment) same skip$4 same (encod$4 or cod$4 or compress$4)	US-PGPUB; USPAT; USOCR; FPRS; EPO; JPO; DERWENT; IBM_TDB	SAME	ON	2008/01/18 22:29
L2	49	(jani near2 lainema)	US-PGPUB; USPAT; USOCR; FPRS; EPO; JPO; DERWENT; IBM_TDB	SAME	ON	2008/01/18 22:27
L3	1	l1 and l2	US-PGPUB; USPAT; USOCR; FPRS; EPO; JPO; DERWENT; IBM_TDB	SAME	ON	2008/01/18 22:27
L4	0	((zero near2 motion) and (non adj2 zero) and ((neighbor$4 or surround$4) with segment) and skip$4 and (encod$4 or cod$4 or compress$4)). CLM.	US-PGPUB; USPAT; USOCR; FPRS; EPO; JPO; DERWENT; IBM_TDB	SAME	ON	2008/01/18 22:29

EAST Search History

Ref #	Hits	Search Query	DBs	Default Operator	Plurals	Time Stamp
L1	14	(skip near2 mode) with motion with predict$4 with zero	US-PGPUB; USPAT; USOCR; FPRS; EPO; JPO; DERWENT; IBM_TDB	SAME	ON	2008/02/03 10:47
L2	2	(skip near2 mode) same (motion with predict$4 with zero) same copy	US-PGPUB; USPAT; USOCR; FPRS; EPO; JPO; DERWENT; IBM_TDB	SAME	ON	2008/02/03 10:49
L3	23	(skip near2 mode) same (motion with predict$4 with zero)	US-PGPUB; USPAT; USOCR; FPRS; EPO; JPO; DERWENT; IBM_TDB	SAME	ON	2008/02/03 10:54
L4	66	skip same (motion with predict$4 with zero)	US-PGPUB; USPAT; USOCR; FPRS; EPO; JPO; DERWENT; IBM_TDB	SAME	ON	2008/02/03 11:00
L5	3	skip same (motion with predict$4 with zero) same preceding same frame	US-PGPUB; USPAT; USOCR; FPRS; EPO; JPO; DERWENT; IBM_TDB	SAME	ON	2008/02/03 11:03
L6	9	skip same (motion with predict$4) same preceding	US-PGPUB; USPAT; USOCR; FPRS; EPO; JPO; DERWENT; IBM_TDB	SAME	ON	2008/02/03 11:26
L7	3	skip same motion same (predict$4 with zero) same preceding	US-PGPUB; USPAT; USOCR; FPRS; EPO; JPO; DERWENT; IBM_TDB	SAME	ON	2008/02/03 11:30

EAST Search History

L8	3	skip same (predict$4 with zero) same preceding	US-PGPUB; USPAT; USOCR; FPRS; EPO; JPO; DERWENT; IBM_TDB	SAME	ON	2008/02/03 11:29
L9	3	skip same motion same (predic$5 with zero) same preceding	US-PGPUB; USPAT; USOCR; FPRS; EPO; JPO; DERWENT; IBM_TDB	SAME	ON	2008/02/03 11:30
L10	11	skip same motion same predic$5 same preceding	US-PGPUB; USPAT; USOCR; FPRS; EPO; JPO; DERWENT; IBM_TDB	SAME	ON	2008/02/03 11:31

UNITED STATES PATENT AND TRADEMARK OFFICE

UNITED STATES DEPARTMENT OF COMMERCE
United States Patent and Trademark Office
Address: COMMISSIONER FOR PATENTS
P.O. Box 1450
Alexandria, Virginia 22313-1450
www.uspto.gov

APPLICATION NO.	FILING DATE	FIRST NAMED INVENTOR	ATTORNEY DOCKET NO.	CONFIRMATION NO.
10/390,549	03/14/2003	Jani Lainema	944-001.105	3966

4955 7590 02/07/2008
WARE FRESSOLA VAN DER SLUYS & ADOLPHSON, LLP
BRADFORD GREEN, BUILDING 5
755 MAIN STREET, P O BOX 224
MONROE, CT 06468

EXAMINER
NGUYEN, HUY THANH

ART UNIT	PAPER NUMBER
2621	

MAIL DATE	DELIVERY MODE
02/07/2008	PAPER

Please find below and/or attached an Office communication concerning this application or proceeding.

The time period for reply, if any, is set in the attached communication.

Office Action Summary	Application No.	Applicant(s)
	10/390,549	LAINEMA, JANI
	Examiner	Art Unit
	HUY T. NGUYEN	2621

-- The MAILING DATE of this communication appears on the cover sheet with the correspondence address --

Period for Reply

A SHORTENED STATUTORY PERIOD FOR REPLY IS SET TO EXPIRE 3 MONTH(S) OR THIRTY (30) DAYS, WHICHEVER IS LONGER, FROM THE MAILING DATE OF THIS COMMUNICATION.

- Extensions of time may be available under the provisions of 37 CFR 1.136(a). In no event, however, may a reply be timely filed after SIX (6) MONTHS from the mailing date of this communication.
- If NO period for reply is specified above, the maximum statutory period will apply and will expire SIX (6) MONTHS from the mailing date of this communication.
- Failure to reply within the set or extended period for reply will, by statute, cause the application to become ABANDONED (35 U.S.C. § 133). Any reply received by the Office later than three months after the mailing date of this communication, even if timely filed, may reduce any earned patent term adjustment. See 37 CFR 1.704(b).

Status

1)☒ Responsive to communication(s) filed on *01 November 2007*.

2a)☒ This action is **FINAL**. 2b)☐ This action is non-final.

3)☐ Since this application is in condition for allowance except for formal matters, prosecution as to the merits is closed in accordance with the practice under *Ex parte Quayle*, 1935 C.D. 11, 453 O.G. 213.

Disposition of Claims

4)☒ Claim(s) *1,3-8,10-12,14-19,21-26 and 28-70* is/are pending in the application.

4a) Of the above claim(s) _____ is/are withdrawn from consideration.

5)☐ Claim(s) _____ is/are allowed.

6)☒ Claim(s) *1,3-5,7,8,11,12,14-16,18-19,21,22,24-26 and 28-70* is/are rejected.

7)☒ Claim(s) *6,10,17 and 23* is/are objected to.

8)☐ Claim(s) _____ are subject to restriction and/or election requirement.

Application Papers

9)☐ The specification is objected to by the Examiner.

10)☐ The drawing(s) filed on _____ is/are: a)☐ accepted or b)☐ objected to by the Examiner.

Applicant may not request that any objection to the drawing(s) be held in abeyance. See 37 CFR 1.85(a).

Replacement drawing sheet(s) including the correction is required if the drawing(s) is objected to. See 37 CFR 1.121(d).

11)☐ The oath or declaration is objected to by the Examiner. Note the attached Office Action or form PTO-152.

Priority under 35 U.S.C. § 119

12)☐ Acknowledgment is made of a claim for foreign priority under 35 U.S.C. § 119(a)-(d) or (f).

a)☐ All b)☐ Some * c)☐ None of:

1.☐ Certified copies of the priority documents have been received.

2.☐ Certified copies of the priority documents have been received in Application No. _____.

3.☐ Copies of the certified copies of the priority documents have been received in this National Stage application from the International Bureau (PCT Rule 17.2(a)).

* See the attached detailed Office action for a list of the certified copies not received.

Attachment(s)

1) ☒ Notice of References Cited (PTO-892)

2) ☐ Notice of Draftsperson's Patent Drawing Review (PTO-948)

3) ☒ Information Disclosure Statement(s) (PTO/SB/08) Paper No(s)/Mail Date *6/25/07*.

4) ☐ Interview Summary (PTO-413) Paper No(s)/Mail Date. _____.

5) ☐ Notice of Informal Patent Application

6) ☐ Other: _____.

DETAILED ACTION

Claim Rejections - 35 USC § 103

1. The following is a quotation of 35 U.S.C. 103(a) which forms the basis for all obviousness rejections set forth in this Office action:

> (a) A patent may not be obtained though the invention is not identically disclosed or described as set forth in section 102 of this title, if the differences between the subject matter sought to be patented and the prior art are such that the subject matter as a whole would have been obvious at the time the invention was made to a person having ordinary skill in the art to which said subject matter pertains. Patentability shall not be negatived by the manner in which the invention was made.

2. Claims 1-5,7-9,11-16,18-19,20-22 and 24-70 are rejected under 35 U.S.C. 103(a) as being unpatentable over Srinivasan et al (7200275) in view of Sugahara (6683987).

Regarding claim 1, 8,12, 18, 19, 25, 26, Srinivasan discloses a encoder encoding method (column 10, lines 10-15), decoder and decoding method (column 12, lines 1-10, column 4, lines 45-50) for video sequence, the encoder, decoder and method comprising assigning a skip coding mode to a first segment of a first frame of the sequence; assigning either a zero motion vector or a predicted non-zero motion vector for the skip coding mode for the first segment based at least in part on the motion information of a second segment neighboring the first segment ; and forming a prediction for the first segment with respect to a reference frame based on at least in part on the assigned motion vector; and providing in an encoded bitstream an indication of the skip coding mode, wherein no further motion vector information for the first segment is coded in the encoded bitstream (column 4, lines 13-23, column 17, lines 4015, column 15,lines 23-35, Figs. 13-15).

Srinivasan fails to specifically teach using the motion of the neighboring segments to define the mode of the first segment . Sugahara teaches a coding and decoding apparatus having means for defined s kip mode for a first segment based on the neighboring segment (colum 19, lines 15-20, column 21, lines 50-67) . It would have been obvious to one of ordinary skull in the art to modify Srinivasan with Sugahara by using a detecting means as taught by Sugahara with the encoding and decoding device of Srinivasan fo4r defined a skip segment based on the neighboring segments thereby accurately encoding or decoding video data.

Further for claim 12 and 19, Srinivasan teaches multiplexing (adding) and demultiplexing the indication a skip mode (skip mode flags) (column 4, lines 45-50, column 15, lines 60-65)..

Regarding claims 3, 14, Srinivasan as modified with Saguhara teaches the second segment is previously encoded neighboring the first segment (See Saguhara , column 21, lines 50-67).

Regarding claims 4, 15 and 21, Srinivasan further teaches if the motion in the second segment has an insignificant level of motion, the zero motion vector is assigned to the coding. skip mode for is of the first segment and the prediction for the first segment is formed with respect to a corresponding segment of the reference frame associated with the zero motion vector (See Srinivasan, column 17, lines 4-15).

Regarding claims 5,16 and 22, Srinivasan as modified with Saguhara further teaches deriving the predicted non-zero motion vector based at least in part on the motion vector of the second segment; and the predicted non-zero motion vector is

assigned to the skip coding mode of the first segment and the prediction for the first segment t is formed by a motion compensated prediction with respect to the reference frame based at least in part on the predicted non-zero motion vector (See Srinivasan column 17, lines 4-15, Saguhara , column 21, lines 50-67) .

Regarding claims 7 ,11 and 24, Srinivasan as modified with Saguhara further teaches the second segment has zero motion vector, the zero motion vector is assigned for skip of the first segment and the prediction for the first segment is formed with respect to a corresponding segment of the reference frame associated with the zero motion vector, motion information indicative of zero motion is associated with the segment (Srinivasan column 17, lines 5-45, Saguharta column 21, line 50- 67).

Regarding claim 28, Srinivasan as modified with Saguhara further teaches if the second segment has a non-zero motion vector,
the method further comprising deriving the predicted non-zero motion vector based at least in part on the motion vector of the second segment; and
the predicted non-zero motion vector is assigned for the skip coding mode of the first segment; and the prediction for the first segment is formed by a motion compensated prediction with respect to the reference frame based at least in part on the predicted non-zero motion vector (See Srinivasan column 17, lines 4-15, Saguhara column 21, lines 50-67).

Regarding claim 29, Srinivasan as modified with Saguhara further teaches if the second segment has a zero motion vector and the second segment is predicted using motion-compensated prediction from the reference picture, the

zero motion vector is assigned to the skip coding mode of the first segment and the prediction for the first segment is formed with respect to a corresponding segment of the reference frame associated with the zero motion vector(See Srinivasan column 17, lines 4-15, Saguhara column 21, lines 50-67).

Regarding claim 30,Srinivasan as modified with Saguhara further teaches further teaches if the second segment has a zero motion vector and the second segment is predicted using motion-compensated prediction from a second reference picture immediately preceding the picture second segment belongs to, the zero motion vector is assigned to the skip coding mode of the first segment and the prediction for the first segment is formed with respect to a corresponding segment of the reference frame associated with the zero motion vector (See Srinivasan column 17, lines 4-15, Saguhara column 21, lines 50-67).

Regarding claim 31, Srinivasan as modified with Saguhara further teaches performing an analysis of motion information of the second segment and motion information of a third segment neighboring the first segment; and determining whether a region surrounding the first segment has a global or a regional motion in a video sequence based at least in part on a characteristic of the motion vector of the second segment and the motion vector of the third segment (See Srinivasan column 17, lines 4-15, Saguhara column 21, lines 50-67).

Regarding claim 32,, Srinivasan as modified with Saguhara further teaches if the region surrounding the first segment has a global or a regional motion in a video sequence,

the method further comprising deriving the predicted non-zero motion vector based at least in part on the motion vector of the second segment and the motion vector of the third segment; and

the predicted non-zero motion vector is assigned for the skip coding mode of the first segment; and the prediction for the first segment is formed by a motion compensated prediction with respect to the reference frame based at least in part on the predicted non-zero motion vector(See Srinivasan column 17, lines 4-15, Saguhara column 21, lines 50-67).

Regarding claim 33, Srinivasan as modified with Saguhara further teaches deriving the predicted non-zero motion vector based at least in part on the motion vector of the second segment (See Srinivasan column 17, lines 4-15, Saguhara column 21, lines 50-67).

Regarding claim 34, Srinivasan as modified with Saguhara deriving the predicted non-zero motion vector based at least in part on the motion vector of the second segment and motion vector of a third segment neighboring the first

segment. (See Srinivasan column 17, lines 4-15, Saguhara column 21, lines 50-67).

Regarding claim 35, Srinivasan as modified with Saguhara further teaches_, wherein no residual information is provided for the first segment in the encoded bitstream (See Srinivasan column 17, lines 4-15, Saguhara column 21, lines 50-67).

Regarding claim 36, Srinivasan as modified with Saguhara further teaches deriving a predicted motion vector based at least in part on the motion vector of the second segment and motion vector of a third segment neighboring the first segment; and

if any component of the predicted motion vector has an absolute value larger than a certain threshold value, the predicted motion vector is assigned for the skip coding mode of the first segment, and the prediction for the first segment is formed by a motion compensated prediction with respect to the reference frame based at least in part on the predicted motion vector; and

if none of components of the predicted motion vector has an absolute value larger than the certain threshold value, the zero motion vector is assigned for the skip coding mode of the first segment, and the prediction for the first segment is formed with respect to a corresponding segment of the reference frame

associated with the zero motion vector ((See Srinivasan column 17, lines 4-15, Saguhara column 21, lines 50-67).

Regarding claim 37, Srinivasan as modified with Saguhara further teaches if the second segment has a zero motion vector, the zero motion vector is assigned to the skip coding mode of the first segment and the prediction for the first segment is formed with respect to a corresponding segment of the reference frame associated with the zero motion vector (See Srinivasan column 17, lines 4-15, Saguhara column 21, lines 50-67).

Regarding claim 38, Srinivasan as modified with Saguhara further teaches if the second segment has an insignificant level of motion, the zero motion vector is assigned to the skip coding mode of the first segment and the prediction for the first segment is formed with respect to a corresponding segment of the reference frame associated with the zero motion vector(See Srinivasan column 17, lines 4-15, Saguhara column 21, lines 50-67).

Regarding claim 39, Srinivasan as modified with Saguhara further teaches if the second segment has a non-zero motion vector,
the method further comprising deriving the predicted non-zero motion vector based at least in part on the motion vector of the second segment; and
the predicted non-zero motion vector is assigned for the skip coding mode of the

first segment; and the prediction for the first segment is formed by a motion compensated prediction with respect to the reference frame based at least in part on the predicted non-zero motion vector ((See Srinivasan column 17, lines 4-15, Saguhara column 21, lines 50-67).

Regarding claim 40, Srinivasan as modified with Saguhara further if the second segment has a motion characteristic of a global or a regional motion,
the method further comprising deriving the predicted non-zero motion vector based at least in part on the motion vector of the second segment; and
the predicted non-zero motion vector is assigned to the skip coding mode of the first segment and the prediction for the first segment is formed by a motion compensated prediction with respect to the reference frame based at least in part on the predicted non-zero motion vector (See Srinivasan column 17, lines 4-15, Saguhara column 21, lines 50-67).

Regarding claim 41, Srinivasan as modified with Saguhara further teaches if the second segment has a zero motion vector and the second segment is predicted using motion-compensated prediction from the reference picture, the zero motion vector is assigned to the skip coding mode of the first segment and the prediction for the first segment is formed with respect to a corresponding segment of the reference frame associated with the zero motion vector (See Srinivasan column 17, lines 4-15, Saguhara column 21, lines 50-67).

Regarding claim 42, Srinivasan as modified with Saguhara further teaches performing an analysis of motion information of the second segment and motion information of a third segment neighboring the first segment;
determining whether a region surrounding the first segment has a global or a regional motion in a video sequence based at least in part on a characteristic of the motion vector of the second segment and the motion vector of the third segment ((See Srinivasan column 17, lines 4-15, Saguhara column 21, lines 50-67).

Regarding claim 43, Srinivasan as modified with Saguhara further deriving the predicted non-zero motion vector based at least in part on the motion vector of the second segment and the motion vector of the third segment; and
the predicted non-zero motion vector is assigned for the skip coding mode of the first segment; and the prediction for the first segment is formed by a motion compensated prediction with respect to the reference frame based at least in part on the predicted non-zero motion vector (See Srinivasan column 17, lines 4-15, Saguhara column 21, lines 50-67).

Regarding claim 44, Srinivasan as modified with Saguhara further teaches deriving the predicted non-zero motion vector based at least in part on the motion

vector of the second segment ((See Srinivasan column 17, lines 4-15, Saguhara column 21, lines 50-67).

Regarding claim 45, Srinivasan as modified with Saguhara further teaches deriving the predicted non-zero motion vector based at least in part on the motion vector of the second segment and motion vector of a third segment neighboring the first segment ((See Srinivasan column 17, lines 4-15, Saguhara column 21, lines 50-67).

Regarding claim 46, Srinivasan as modified with Saguhara further teaches wherein no residual information is provided for the first segment in the encoded bitstream ((See Srinivasan column 17, lines 4-15, Saguhara column 21, lines 50-67).

Regarding claim 47, Srinivasan as modified with Saguhara further teaches deriving a predicted motion vector based at least in part on the motion vector of the second segment and motion vector of a third segment neighboring the first segment; and if any component of the predicted motion vector has an absolute value larger than a certain threshold value, the predicted motion vector is assigned for the skip coding mode of the first segment, and the prediction for the first segment is formed by a motion compensated prediction with respect to the reference frame based at least in part on the predicted motion vector; and

if none of components of the predicted motion vector has an absolute value larger than the certain threshold value, the zero motion vector is assigned for the skip coding mode of the first segment, and the prediction for the first segment is formed with respect to a corresponding segment of the reference frame associated with the zero motion vector (See Srinivasan column 17, lines 4-15, Saguhara column 21, lines 50-67).

Regarding claim 48, Srinivasan as modified with Saguhara further teaches if the second segment has a zero motion vector and the second segment is predicted using motion-compensated prediction from a second reference picture immediately preceding the picture second segment belongs to, the zero motion vector is assigned to the skip coding mode of the first segment and the prediction for the first segment is formed with respect to a corresponding segment of the reference frame associated with the zero motion vector(See Srinivasan column 17, lines 4-15, Saguhara column 21, lines 50-67).

Regarding claim 49, Srinivasan as modified with Saguhara further teaches if the second segment has a non-zero motion vector,
the motion estimation block is further arranged to derive the predicted non-zero motion vector based at least in part on the motion vector of the second segment; and
the predicted non-zero motion vector is assigned for the skip coding mode for the

first segment; and the prediction for the first segment is formed by a motion compensated prediction with respect to the reference frame based at least in part on the predicted non-zero motion vector (See Srinivasan column 17, lines 4-15, Saguhara column 21, lines 50-67).

Regarding claim 50, Srinivasan as modified with Saguhara further the motion estimation block is further arranged to: perform an analysis of motion information of the second segment and motion information of a third segment neighboring the first segment;

determine whether a region surrounding the first segment has a global or a regional motion in a video sequence based at least in part on a characteristic of the motion vector of the second segment and the motion vector of the third segment (See Srinivasan column 17, lines 4-15, Saguhara column 21, lines 50-67).

Regarding claim 51, Srinivasan as modified with Saguhara further teaches if the region surrounding the first segment has a global or a regional motion in a video sequence,

the motion estimation block further arranged to derive the predicted non-zero motion vector based at least in part on the motion vector of the second segment and the motion vector of the third segment; and

the predicted non-zero motion vector is assigned for the skip coding mode for the

first segment; and the prediction for the first segment is formed by a motion compensated prediction with respect to the reference frame based at least in part on the predicted non-zero motion vector (See Srinivasan column 17, lines 4-15, Saguhara column 21, lines 50-67).

Regarding claim 52, Srinivasan as modified with Saguhara further teaches the motion estimation block further arranged to derive the predicted non-zero motion vector based at least in part on the motion vector of the second segment (See Srinivasan column 17, lines 4-15, Saguhara column 21, lines 50-67).

Regarding claim 53, Srinivasan as modified with Saguhara further teaches the motion estimation block further arranged to derive the predicted non-zero motion vector based at least in part on the motion vector of the second segment and motion vector of a third segment neighboring the first segment (See Srinivasan column 17, lines 4-15, Saguhara column 21, lines 50-67).

Regarding claim 54, Srinivasan as modified with Saguhara further teaches wherein no residual information is provided for the first segment in the encoded bitstream (See Srinivasan column 17, lines 4-15, Saguhara column 21, lines 50-67).

Regarding claim 55, Srinivasan as modified with Saguhara further teaches the motion estimation block further arranged to derive a predicted motion vector

based at least in part on the motion vector of the second segment and motion vector of a third segment neighboring the first segment; and

if any component of the predicted motion vector has an absolute value larger than a certain threshold value, the predicted motion vector is assigned for the skip coding mode of the first segment, and the prediction for the first segment is formed by a motion compensated prediction with respect to the reference frame based at least in part on the predicted motion vector; and

if none of components of the predicted motion vector has an absolute value larger than the certain threshold value, the zero motion vector is assigned for the skip coding mode of the first segment, and the prediction for the first segment is formed with respect to a corresponding segment of the reference frame associated with the zero motion vector(See Srinivasan column 17, lines 4-15, Saguhara column 21, lines 50-67).

Regarding claim 56, Srinivasan as modified with Saguhara further teaches if the second segment has a zero motion vector, the zero motion vector is assigned to the skip coding mode of the first segment and the prediction for the first segment is formed with respect to a corresponding segment of the reference frame associated with the zero motion vector (See Srinivasan column 17, lines 4-15, Saguhara column 21, lines 50-67).

Regarding claim 57, Srinivasan as modified with Saguhara further teaches if

the second segment has a zero motion vector and the second segment is predicted using motion-compensated prediction from the reference picture, the zero motion vector is assigned to the skip coding mode of the first segment and the prediction for the first segment is formed with respect to a corresponding segment of the reference frame associated with the zero motion vector(See Srinivasan column 17, lines 4-15, Saguhara column 21, lines 50-67).

Regarding claim 58, Srinivasan as modified with Saguhara further teaches if the second segment has a zero motion vector and the second segment is predicted using motion-compensated prediction from a second reference picture immediately preceding the picture second segment belongs to, the zero motion vector is assigned to the skip coding mode of the first segment and the prediction for the first segment is formed with respect to a corresponding segment of the reference frame associated with the zero motion vector (See Srinivasan column 17, lines 4-15, Saguhara column 21, lines 50-67).

Regarding claim 59, Srinivasan as modified with Saguhara further teaches if the second segment has a zero motion vector, the zero-motion vector is assigned to the skip coding mode for the first segment and the prediction for the first segment is formed with respect to a corresponding segment of the reference frame associated with the zero motion vector(See Srinivasan column 17, lines 4-15, Saguhara column 21, lines 50-67).

Regarding claim 60, Srinivasan as modified with Saguhara further teaches if the second segment has a non-zero motion vector, the motion compensated prediction block further arranged to derive the predicted non\- zero motion vector based at least in part on the motion vector of the second segment; and the predicted non-zero motion vector is assigned for the skip coding mode for the first segment; and the prediction for the first segment is formed by a motion compensated prediction with respect to the reference frame based at least in part on the predicted non-zero motion vector (See Srinivasan column 17, lines 4-15, Saguhara column 21, lines 50-67).

Regarding claim 61, Srinivasan as modified with Saguhara further teaches the motion estimation block further arranged to:
perform an analysis of motion information of the second segment and motion information of a third segment neighboring the first segment;
determine whether a region surrounding the first segment has a global or a regional motion in a video sequence based at least in part on a characteristic of the motion vector of the second segment and the motion vector of the third segment (See Srinivasan column 17, lines 4-15, Saguhara column 21, lines 50-67).

Regarding claim 62, Srinivasan as modified with Saguhara further teaches if

the region surrounding the first segment has a global or a regional motion in a video sequence,

the motion estimation block further arranged to derive the predicted non-zero motion vector based at least in part on the motion vector of the second segment and the motion vector of the third segment; and

the predicted non-zero motion vector is assigned for the skip coding mode for the first segment; and the prediction for the first segment is formed by a motion compensated prediction with respect to the reference frame based at least in part on the predicted non-zero motion vector (See Srinivasan column 17, lines 4-15, Saguhara column 21, lines 50-67).

Regarding claim 63, Srinivasan as modified with Saguhara further the motion estimation block further arranged to derive the predicted non-zero motion vector based at least in part on the motion vector of the second segment (See Srinivasan column 17, lines 4-15, Saguhara column 21, lines 50-67).

Regarding claim 64, Srinivasan as modified with Saguhara further teaches the motion estimation block further arranged to derive the predicted non-zero motion vector based at least in part on the motion vector of the second segment and motion vector of a third segment neighboring the first segment (See Srinivasan column 17, lines 4-15, Saguhara column 21, lines 50-67).

Regarding claim 65, Srinivasan as modified with Saguhara further wherein no residual information is provided for the first segment in an encoded bitstream. (See Srinivasan column 17, lines 4-15, Saguhara column 21, lines 50-67).

Regarding claim 66, Srinivasan as modified with Saguhara further teaches a decoder according to claim 19, wherein the motion estimation block further arranged to derive a predicted motion vector based at least in part on the motion vector of the second segment and motion vector of a third segment neighboring the first segment; and

if any component of the predicted motion vector has an absolute value larger than a certain threshold value, the predicted motion vector is assigned for the skip coding mode of the first segment, and the prediction for the first segment is formed by a motion compensated prediction with respect to the reference frame based at least in part on the predicted motion vector; and

if none of components of the predicted motion vector has an absolute value larger than the certain threshold value, the zero motion vector is assigned for the skip coding mode of the first segment, and the prediction for the first segment is formed with respect to a corresponding segment of the reference frame associated with the zero motion vector (See Srinivasan column 17, lines 4-15, Saguhara column 21, lines 50-67).

Regarding claim 67, Srinivasan as modified with Saguhara further teaches if

the second segment has a zero motion vector and the second segment is predicted using motion-compensated prediction from the reference picture, the zero motion vector is assigned to the skip coding mode of the first segment and the prediction for the first segment is formed with respect to a corresponding segment of the reference frame associated with the zero motion vector(See Srinivasan column 17, lines 4-15, Saguhara column 21, lines 50-67).

Regarding claim 68, Srinivasan as modified with Saguhara further teaches if the second segment has a zero motion vector and the second segment is predicted using motion-compensated prediction from a second reference picture immediately preceding the picture second segment belongs to, the zero motion vector is assigned to the skip coding mode of the first segment and the prediction for the first segment is formed with respect to a corresponding segment of the reference frame associated with the zero motion vector (See Srinivasan column 17, lines 4-15, Saguhara column 21, lines 50-67).

Regarding claim 69, Srinivasan as modified with Saguhara further teaches , wherein no further motion vector information for the first segment is retrieved from an encoded bitstream (See Srinivasan column 17, lines 4-15, Saguhara column 21, lines 50-67).

Regarding claim 70, Srinivasan as modified with Saguhara further teaches 70.

(new) A method according to claim 8, wherein no further motion vector information for the first segment is retrieved from the encoded bitstream. (See Srinivasan column 17, lines 4-15, Saguhara column 21, lines 50-67).

Allowable Subject Matter

3. Claims 6,10,17 and 23 are objected to as being dependent upon a rejected base claim, but would be allowable if rewritten in independent form including all of the limitations of the base claim and any intervening claims.

Response to Arguments

4. Applicant's arguments with respect to claims have been considered but are moot in view of the new ground(s) of rejection.

Conclusion

5. Applicant's amendment necessitated the new ground(s) of rejection presented in this Office action. Accordingly, **THIS ACTION IS MADE FINAL**. See MPEP § 706.07(a). Applicant is reminded of the extension of time policy as set forth in 37 CFR 1.136(a).

A shortened statutory period for reply to this final action is set to expire THREE MONTHS from the mailing date of this action. In the event a first reply is filed within TWO MONTHS of the mailing date of this final action and the advisory action is not mailed until after the end of the THREE-MONTH shortened statutory period, then the shortened statutory period will expire on the date the advisory action is mailed, and any extension fee pursuant to 37 CFR 1.136(a) will be calculated from the mailing date of

the advisory action. In no event, however, will the statutory period for reply expire later than SIX MONTHS from the date of this final action.

6. Any inquiry concerning this communication or earlier communications from the examiner should be directed to HUY T. NGUYEN whose telephone number is (571) 272-7378. The examiner can normally be reached on 8:30AM -6:00PM.

If attempts to reach the examiner by telephone are unsuccessful, the examiner's supervisor, John W. Miller can be reached on (571) 272-7353. The fax phone number for the organization where this application or proceeding is assigned is 571-273-8300.

Information regarding the status of an application may be obtained from the Patent Application Information Retrieval (PAIR) system. Status information for published applications may be obtained from either Private PAIR or Public PAIR. Status information for unpublished applications is available through Private PAIR only. For more information about the PAIR system, see http://pair-direct.uspto.gov. Should you have questions on access to the Private PAIR system, contact the Electronic Business Center (EBC) at 866-217-9197 (toll-free). If you would like assistance from a USPTO Customer Service Representative or access to the automated information system, call 800-786-9199 (IN USA OR CANADA) or 571-272-1000.

H.N

HUY NGUYEN
PRIMARY EXAMINER

FORM PTO-1449 INFORMATION DISCLOSURE STATEMENT	ATTY DOCKET NO. 944-001.105	SERIAL NO. 10/390,549
	APPLICANTS: Jani Lainema	
	FILING DATE: March 14, 2003	ART UNIT: 2614

FILE IAP83 JUN 25 2007 PATENT & TRADEMARK OFFICE

UNITED STATES PATENT DOCUMENTS

EXAM. INITIAL		DOCUMENT NUMBER	DATE	INVENTOR/ASSIGNEE	CLASS	SUBCLASS	FILING DATE IF APPROPRIATE

FOREIGN PATENT DOCUMENTS

		DOCUMENT NUMBER	DATE	COUNTRY	CLASS	SUBCLASS	TRANSLATION YES/NO

OTHER DOCUMENTS (INCLUDING AUTHOR, TITLE, DATE, PERTINENT PAGES, ETC.)

HN		Acta of Zhongshan University, Vol. 40, No. 2; L. Hongmei et al.; "An Improved Multiresolution Motion Estimation Algorithm"; pp. 34-37; March 2001.
HN		ITU Telecommunications Standardization Sector, Doc. VCEG-N77; S. Sun et al; "Motion Vector Coding with Global Motion Parameters"; pp. 1-11; Fourteenth Meeting: Santa Barbara, CA, USA, Sept. 24-28, 2001.
HN		ITU Telecommunications Standardization Sector, Doc. VCEG-N16; S. Sun et al; "Core Experiment Description: Motion Vector Coding with Global Motion Parameters"; pp. 1-6; Fourteenth Meeting: Santa Barbara, CA, USA, Sept. 24-28, 2001.
HN		Joint Photographic Expert Group Conference, Crowborough JPEG Forum Ltd, GB, Specialists Group on Coding for Visual Telephony Joint Photographic Expert Group; "Description of Ref. Model 8 (RM8)"; pp. 1-72; June 9, 1989.

Examiner (To be assigned) Thuy Nguyen	Date: 7/29/08

Notice of References Cited	Application/Control No. 10/390,549	Applicant(s)/Patent Under Reexamination LAINEMA, JANI	
	Examiner HUY T. NGUYEN	Art Unit 2621	Page 1 of 1

U.S. PATENT DOCUMENTS

*		Document Number Country Code-Number-Kind Code	Date MM-YYYY	Name	Classification
*	A	US-6,683,987	01-2004	Sugahara, Takayuki	382/235
*	B	US-7,200,275	04-2007	Srinivasan et al.	382/239
	C	US-			
	D	US-			
	E	US-			
	F	US-			
	G	US-			
	H	US-			
	I	US-			
	J	US-			
	K	US-			
	L	US-			
	M	US-			

FOREIGN PATENT DOCUMENTS

*		Document Number Country Code-Number-Kind Code	Date MM-YYYY	Country	Name	Classification
	N					
	O					
	P					
	Q					
	R					
	S					
	T					

NON-PATENT DOCUMENTS

*		Include as applicable: Author, Title Date, Publisher, Edition or Volume, Pertinent Pages)
	U	
	V	
	W	
	X	

*A copy of this reference is not being furnished with this Office action. (See MPEP § 707.05(a).)
Dates in MM-YYYY format are publication dates. Classifications may be US or foreign.

Search Notes	Application/Control No.	Applicant(s)/Patent under Reexamination
	10/390,549	LAINEMA, JANI
	Examiner	Art Unit
	HUY T. NGUYEN	2621

SEARCHED			
Class	Subclass	Date	Examiner
386	68	6/23/07	HN
	111		
	112		
	95		
348	486		
	699		
375	240.15		

INTERFERENCE SEARCHED			
Class	Subclass	Date	Examiner

SEARCH NOTES (INCLUDING SEARCH STRATEGY)		
	DATE	EXMR
East search	1/18/08	HN

OIPE
MAY 2 7 2008
PATENT & TRADEMARK OFFICE

IN THE UNITED STATES PATENT AND TRADEMARK OFFICE

Re: Application of: Jani Lainema

Attorney Docket: 944-001.105

Serial No. 10/390,549

Group Art Unit: 2621

Filed: March 14, 2003

Examiner: Huy Thanh Nguyen

For: **METHOD FOR CODING MOTION IN A VIDEO SEQUENCE**

Mailstop AF
Commissioner Of Patents
P.O. Box 1450
Alexandria, VA 22313-1450

RESPONSE TO FINAL OFFICE ACTION (Paper No. 20080129)

Sir:

This responds to the Final Office Action, mailed February 7, 2008.

In the patent application, claims 1, 3-8, 10-12, 14-19, 21-26 and 28-70 are pending. In the office action, claims 1, 3-5, 7, 8, 11, 12, 14-16, 18-19, 21, 22, 24-26 and 28-70 are rejected, and claims 6, 10, 17 and 23 are objected to but would be allowable if rewritten in independent form.

******If any fee and/or extension is required in addition to any enclosed herewith, please charge Account No. 23-0442.***

CERTIFICATE OF MAILING/TRANSMISSION (37 C.F.R. § 1.8(a))

I hereby certify that this correspondence is, on the date shown below, being:

MAILING

☐ Deposited with the United States Postal Service with sufficient postage as first class Mail in an envelope addressed to the Commissioner for Patents, PO Box 1450, Alexandria, VA 22313-1450.

FACSIMILE

☐ Transmitted by facsimile to the U.S. Patent and Trademark Office.

Date: May 22, 2008

Marie E. Forte
Signature
Marie E. Forte
(type or print name of person certifying)

At section 2, claims 1, 3-5, 7, 8, 11, 12, 14-16, 18, 19, 21, 22, 24-26 and 28-70 are rejected under 35 U.S.C. 103(a) as being unpatentable over *Srinivasan et al.* (U.S. Patent No. 7,200, 275, hereafter referred to as *Srinivasan*), in view of *Sugahara* (U.S. Patent No. 6,683,987).

It is respectfully submitted that the present application was filed on March 14, 2003, claiming the benefit of a U.S. provisional application, serial No. 60/365,072, filed March 15, 2002. *Srinivasan* was filed on December 16, 2002, related to a first provisional application, serial No. 60/341,674, filed December 17, 2001, and a second provisional application, serial No. 60/377,712, filed on May 3, 2002. This means that **only** the filing date, December 17, 2001, of the first provisional application serial No. 60/341,674 is earlier than the priority date, March 15, 2002, of the present application.

In rejecting claim 1, 8, 12, 18, 19, 25 and 26, the Examiner cites column 4, lines 13-23, lines 45-50; column 17, lines 4-15; column 15, line 23-35, lines 60-65; and Figures 13-15 of *Srinivasan* to show that *Srinivasan* discloses assigning a skip coding mode to a first segment of a first frame of the sequence; assigning either a zero motion vector or a predicted non-zero motion vector for the skip coding mode for the first segment based at least in part on the motion information of a second segment neighboring the first segment; forming a prediction for the first segment with respect to a reference frame based at least in part on the assigned motion vector; and providing in an encoded bitstream an indication of the skip coding mode, wherein no further motion vector information for the first segment is coded in the encoded bitstream.

Applicant respectfully submits that, among the passages in *Srinivasan* that are cited by the Examiner in the office action, the text in column 4, lines 13-16, does appear on p.6, lines 6-8 of the provisional application serial No. 60/341,674 as follows:

> *The encoder entropy encodes the scanned coefficients using a variation of run-length coding (470). The encoder selects an entropy code from one or more run/level/last tables (175) and outputs the entropy code.*

However, this section of *Srinivasan* is not relevant to the skip coding mode of the claimed invention.

The remaining passages in *Srinivasan* that are cited by the Examiner in the office action, as disclosed in column 4, lines 17-23, lines 45-50; column 17, lines 4-15; column 15, line 23-35, lines 60-65; and Figures 13-15 of *Srinivasan* are **not** disclosed in the first provisional application serial No. 60/341,674, filed December 17, 2001.

Furthermore, Figures 10-12 and 16-25 of *Srinivasan* also are **not** found in the provisional application serial No. 60/341,674. The relevant contents of column 4, line 46 to column 6, line 18; column 7, lines 27-65; column 11, lines 15-20; and column 13, lines 24 to column 21, line 16 of *Srinivasan* are **not** disclosed in the provisional application serial No. 60/341,674.

For the above reasons, *Srinivasan* is not available as a prior art reference. For the same reasons, *Srinivasan* in view of *Sugahara*, fails to render claims 1, 8, 12, 18, 19, 25 and 26 obvious.

As for claims 3-5, 7, 11, 14-16, 21, 22, 24 and 28-70, they are dependent from claims 1, 8, 12, and 19 and recite features not recited in claims 1, 8, 12 and 19. For reasons regarding claims 1, 8, 12 and 19 above, claims 3-5, 7, 11, 14-16, 21, 22, 24 and 28-70 are also distinguishable over the cited *Srinivasan* and *Sugahara* references.

Claims 6, 10, 17 and 23 are allowable.

CONCLUSION

Claims 1, 3-8, 10-12, 14-19, 21-26 and 28-70 are allowable. Early allowance of all pending claims is earnestly solicited.

Respectfully submitted,

Kenneth Q. Lao
Registration No. 40,061

Date: May 22, 2008

WARE, FRESSOLA, VAN DER SLUYS
& ADOLPHSON LLP
Bradford Green, Building 5
755 Main Street, PO Box 224
Monroe, CT 06468
(203) 261-1234

OIPE
MAY 27 2008
PATENT & TRADEMARK OFFICE

PTO/SB/22 (01-08)
Approved for use through 05/31/2008. OMB 0651-0031
U.S. Patent and Trademark Office; U.S. DEPARMENT OF COMMERCE
Under the Paperwork Reduction Act of 1995, no persons are required to respond to a collection of information unless if displays a valid OMB control number.

PETITION FOR EXTENSION OF TIME UNDER 37 CFR 1.136(a)

FY 2008

(Fees pursuant to the Consolidated Appropriations Act, 2005 (H.R. 4818).)

Docket Number (Optional) 944-001105

Application Number 10/390,549 | Filed March 14, 2003

For METHOD FOR CODING MOTION IN A VIDEO SEQUENCE

Art Unit 2621 | Examiner Huy Thanh Nguyen

This is a request under the provisions of 37 CFR 1.136(a) to extend the period for filing a reply in the above identified application.

The requested extension and fee are as follows (check time period desired and enter the appropriate fee below):

		Fee	Small Entity Fee	
[x]	One month (37 CFR 1.17(a)(1))	$120	$60	$ 120.00
[ ]	Two months (37 CFR 1.17(a)(2))	$460	$230	$
[ ]	Three months (37 CFR 1.17(a)(3))	$1050	$525	$
[ ]	Four months (37 CFR 1.17(a)(4))	$1640	$820	$
[ ]	Five months (37 CFR 1.17(a)(5))	$2230	$1115	$

[ ] Applicant claims small entity status. See 37 CFR 1.27.

05/27/2008 NNGUYEN1 00000018 10390549
01 FC:1251 120.00 OP

[xx] A check in the amount of the fee is enclosed.

[ ] Payment by credit card. Form PTO-2038 is attached.

[ ] The Director has already been authorized to charge fees in this application to a Deposit Account.

[xx] The Director is hereby authorized to charge any fees which may be required, or credit any overpayment, to Deposit Account Number 23-0442. I have enclosed a duplicate copy of this sheet.

WARNING: Information on this form may become public. Credit card information should not be included on this form. Provide credit card information and authorization on PTO-2038.

I am the

[ ] applicant/inventor.

[ ] assignee of record of the entire interest. See 37 CFR 3.71. Statement under 37 CFR 3.73(b) is enclosed (Form PTO/SB/96).

[xx] attorney or agent of record. Registration Number 40,061

[ ] attorney or agent under 37 CFR 1.34. Registration number if acting under 37 CFR 1.34 _____

Signature | Date: May 22, 2008

Kenneth Q. Lao (Typed or printed name) | Telephone Number: 203-261-1234

NOTE: Signatures of all the inventors or assignees of record of the entire interest or their representative(s) are required. Submit multiple forms if more than one signature is required, see below.

[ ] Total of _____ forms are submitted.

This collection of information is required by 37 CFR 1.136(a). The information is required to obtain or retain a benefit by the public which is to file (and by the USPTO to process) an application. Confidentiality is governed by 35 U.S.C. 122 and 37 CFR 1.11 and 1.14. This collection is estimated to take 6 minutes to complete, including gathering, preparing, and submitting the completed application form to the USPTO. Time will vary depending upon the individual case. Any comments on the amount of time you require to complete this form and/or suggestions for reducing this burden, should be sent to the Chief Information Officer, U.S. Patent and Trademark Office, U.S. Department of Commerce, P.O. Box 1450, Alexandria, VA 22313-1450. DO NOT SEND FEES OR COMPLETED FORMS TO THIS ADDRESS. **SEND TO: Commissioner for Patents, P.O. Box 1450, Alexandria, VA 22313-1450.**

If you need assistance in completing the form, call 1-800-PTO-9199 and select option 2.

UNITED STATES PATENT AND TRADEMARK OFFICE

UNITED STATES DEPARTMENT OF COMMERCE
United States Patent and Trademark Office
Address: COMMISSIONER FOR PATENTS
P.O. Box 1450
Alexandria, Virginia 22313-1450
www.uspto.gov

APPLICATION NO.	FILING DATE	FIRST NAMED INVENTOR	ATTORNEY DOCKET NO.	CONFIRMATION NO.
10/390,549	03/14/2003	Jani Lainema	944-001.105	3966

4955 7590 06/30/2008
WARE FRESSOLA VAN DER SLUYS & ADOLPHSON, LLP
BRADFORD GREEN, BUILDING 5
755 MAIN STREET, P O BOX 224
MONROE, CT 06468

EXAMINER
NGUYEN, HUY THANH

ART UNIT	PAPER NUMBER
2621	

MAIL DATE	DELIVERY MODE
06/30/2008	PAPER

Please find below and/or attached an Office communication concerning this application or proceeding.

The time period for reply, if any, is set in the attached communication.

Office Action Summary	Application No.	Applicant(s)	
	10/390,549	LAINEMA, JANI	
	Examiner	Art Unit	
	HUY T. NGUYEN	2621	

-- The MAILING DATE of this communication appears on the cover sheet with the correspondence address --

Period for Reply

A SHORTENED STATUTORY PERIOD FOR REPLY IS SET TO EXPIRE 2 MONTH(S) OR THIRTY (30) DAYS, WHICHEVER IS LONGER, FROM THE MAILING DATE OF THIS COMMUNICATION.

- Extensions of time may be available under the provisions of 37 CFR 1.136(a). In no event, however, may a reply be timely filed after SIX (6) MONTHS from the mailing date of this communication.
- If NO period for reply is specified above, the maximum statutory period will apply and will expire SIX (6) MONTHS from the mailing date of this communication.
- Failure to reply within the set or extended period for reply will, by statute, cause the application to become ABANDONED (35 U.S.C. § 133). Any reply received by the Office later than three months after the mailing date of this communication, even if timely filed, may reduce any earned patent term adjustment. See 37 CFR 1.704(b).

Status

1)☒ Responsive to communication(s) filed on *27 May 2008 and 01 November 2007*.

2a)☐ This action is **FINAL**. 2b)☐ This action is non-final.

3)☒ Since this application is in condition for allowance except for formal matters, prosecution as to the merits is closed in accordance with the practice under *Ex parte Quayle*, 1935 C.D. 11, 453 O.G. 213.

Disposition of Claims

4)☒ Claim(s) *1,3-8,10-12,14-19,21-26 and 28-70* is/are pending in the application.

4a) Of the above claim(s) _____ is/are withdrawn from consideration.

5)☒ Claim(s) *1,3-8,10-12,14-19,21-26 and 28-70,* is/are allowed.

6)☐ Claim(s) _____ is/are rejected.

7)☐ Claim(s) _____ is/are objected to.

8)☐ Claim(s) _____ are subject to restriction and/or election requirement.

Application Papers

9)☐ The specification is objected to by the Examiner.

10)☐ The drawing(s) filed on _____ is/are: a)☐ accepted or b)☐ objected to by the Examiner.

Applicant may not request that any objection to the drawing(s) be held in abeyance. See 37 CFR 1.85(a).

Replacement drawing sheet(s) including the correction is required if the drawing(s) is objected to. See 37 CFR 1.121(d).

11)☐ The oath or declaration is objected to by the Examiner. Note the attached Office Action or form PTO-152.

Priority under 35 U.S.C. § 119

12)☐ Acknowledgment is made of a claim for foreign priority under 35 U.S.C. § 119(a)-(d) or (f).

a)☐ All b)☐ Some * c)☐ None of:

1.☐ Certified copies of the priority documents have been received.

2.☐ Certified copies of the priority documents have been received in Application No. _____.

3.☐ Copies of the certified copies of the priority documents have been received in this National Stage application from the International Bureau (PCT Rule 17.2(a)).

* See the attached detailed Office action for a list of the certified copies not received.

Attachment(s)

1) ☐ Notice of References Cited (PTO-892)
2) ☐ Notice of Draftsperson's Patent Drawing Review (PTO-948)
3) ☐ Information Disclosure Statement(s) (PTO/SB/08) Paper No(s)/Mail Date _____.
4) ☐ Interview Summary (PTO-413) Paper No(s)/Mail Date. _____ .
5) ☐ Notice of Informal Patent Application
6) ☐ Other: _____.

DETAILED ACTION

1. This application is in condition for allowance except for the following formal matters:

In claim 1, line 7, claim 7, line 8, claim 12, line 8, claim 19, line 10 , it is not clear whether " the assigned motion vector " is being referencing to the non- zero motion vector or the predicted non- zero motion vector. Appropriate correction is required.

Prosecution on the merits is closed in accordance with the practice under *Ex parte Quayle*, 25 USPQ 74, 453 O.G. 213, (Comm'r Pat. 1935).

A shortened statutory period for reply to this action is set to expire **TWO MONTHS** from the mailing date of this letter.

2. Any inquiry concerning this communication or earlier communications from the examiner should be directed to HUY T. NGUYEN whose telephone number is (571)272-7378. The examiner can normally be reached on 8:30AM -6:00PM.

If attempts to reach the examiner by telephone are unsuccessful, the examiner's supervisor, John W. Miller can be reached on (571) 272-7353. The fax phone number for the organization where this application or proceeding is assigned is 571-273-8300.

Information regarding the status of an application may be obtained from the Patent Application Information Retrieval (PAIR) system. Status information for published applications may be obtained from either Private PAIR or Public PAIR. Status information for unpublished applications is available through Private PAIR only. For more information about the PAIR system, see http://pair-direct.uspto.gov. Should you have questions on access to the Private PAIR system, contact the Electronic Business Center (EBC) at 866-217-9197 (toll-free). If you would like assistance from a USPTO Customer Service Representative or access to the automated information system, call 800-786-9199 (IN USA OR CANADA) or 571-272-1000.

/HUY T NGUYEN/
Primary Examiner, Art Unit 2621

EAST Search History

Ref #	Hits	Search Query	DBs	Default Operator	Plurals	Time Stamp
L1	5	"7202275"	US-PGPUB; USPAT; USOCR; FPRS; EPO; JPO; DERWENT; IBM_TDB	SAME	ON	2008/06/23 13:43
L2	1	"72002275"	US-PGPUB; USPAT; USOCR; FPRS; EPO; JPO; DERWENT; IBM_TDB	SAME	ON	2008/06/23 13:44
L3	5	"7200275"	US-PGPUB; USPAT; USOCR; FPRS; EPO; JPO; DERWENT; IBM_TDB	SAME	ON	2008/06/23 13:44
L4	45	(skip$4 near2 (cod$4 or encod $4)) same ((zero or predict$4) with (motion adj2 vector)) same (reference near3 (frame or picture))	US-PGPUB; USPAT; USOCR; FPRS; EPO; JPO; DERWENT; IBM_TDB	SAME	ON	2008/06/23 13:56
L5	35	(assign$4 or indicat$4 or tag $5) same (skip$4 near2 (cod$4 or encod$4)) same ((zero or predict $4) with (motion adj2 vector)) same (reference near3 (frame or picture))	US-PGPUB; USPAT; USOCR; FPRS; EPO; JPO; DERWENT; IBM_TDB	SAME	ON	2008/06/23 14:02

L6	24	((assign$4 or indicat$4 or tag $5) with (skip$4 near2 (cod$4 or encod$4))) same ((zero or predict $4) with (motion adj2 vector)) same (reference near3 (frame or picture))	US-PGPUB; USPAT; USOCR; FPRS; EPO; JPO; DERWENT; IBM_TDB	SAME	ON	2008/06/23 14:34
L7	0	(indicat$4 same (skip$4 near2 (cod$4 or encod $4))) same ((assign$4 or tag $4) with (zero or predict$4) with (motion adj2 vector)) same (reference near3 (frame or picture)) same (surround$4 or neighbor$4)	US-PGPUB; USPAT; USOCR; FPRS; EPO; JPO; DERWENT; IBM_TDB	SAME	ON	2008/06/23 14:40
L8	0	(skip$4 near2 (cod$4 or encod $4)) same ((assign$4 or tag $4) with (zero or predict$4) with (motion adj2 vector)) same (reference near3 (frame or picture)) same (surround$4 or neighbor$4)	US-PGPUB; USPAT; USOCR; FPRS; EPO; JPO; DERWENT; IBM_TDB	SAME	ON	2008/06/23 14:42
L9	0	(skip$4 near2 (cod$4 or encod $4)) same ((assign$4 or tag $4) with (zero or predict$4) with (motion adj2 vector)) same (reference near3 (frame or picture))	US-PGPUB; USPAT; USOCR; FPRS; EPO; JPO; DERWENT; IBM_TDB	SAME	ON	2008/06/23 14:43

L10	0	(skip$4 near3 (cod$4 or encod $4) near3 mode) same (assign$4 or tag$4) same ((zero or predict $4) with (motion adj2 vector)) same segment$1 same (reference near3 (frame or picture))	US-PGPUB; USPAT; USOCR; FPRS; EPO; JPO; DERWENT; IBM_TDB	SAME	ON	2008/06/23 14:47
L11	2	((assign$4 or indicat$4 or tag $5) with (skip$4 near2 (cod$4 or encod$4))) same ((zero or predict $4) with (motion adj2 vector)) same (reference near3 (frame or picture)) same mode	US-PGPUB; USPAT; USOCR; FPRS; EPO; JPO; DERWENT; IBM_TDB	SAME	ON	2008/06/23 14:47
L12	1	((skip$4 near3 (cod$4 or encod $4) near3 mode) same (assign$4 or tag$4) same ((zero or predict $4) with (motion adj2 vector))) and (segment$1 same (reference near3 (frame or picture)))	US-PGPUB; USPAT; USOCR; FPRS; EPO; JPO; DERWENT; IBM_TDB	SAME	ON	2008/06/23 14:52
L13	0	((skip$4 with (cod $4 or encod$4) with mode) and ((assign$4 or tag $4) same ((zero or predict$4) with (motion adj2 vector))) and (segment$1 same (reference near3 (frame or picture)))).CLM.	US-PGPUB; USPAT; USOCR; FPRS; EPO; JPO; DERWENT; IBM_TDB	SAME	ON	2008/06/23 15:02

L14	21	((skip$4 with (cod $4 or encod$4) with mode)) and ((zero or predict $4) with (motion adj2 vector)) and segment$1 and (reference near3 (frame or picture)).CLM.	US-PGPUB; USPAT; USOCR; FPRS; EPO; JPO; DERWENT; IBM_TDB	SAME	ON	2008/06/23 15:06
L15	15	((skip$4 with (cod $4 or encod$4) with mode)) and ((zero or predict $4) with (motion adj2 vector)) and (neighbor$4 or surround$4) and segment$1 and (reference near3 (frame or picture)).CLM.	US-PGPUB; USPAT; USOCR; FPRS; EPO; JPO; DERWENT; IBM_TDB	SAME	ON	2008/06/23 15:12

6/23/08 3:14:57 PM
C:\Documents and Settings\hnguyen3\My Documents\EAST\\default.wsp

Search Notes	Application/Control No.	Applicant(s)/Patent Under Reexamination
	10390549	LAINEMA, JANI
	Examiner	**Art Unit**
	HUY T NGUYEN	2621

SEARCHED

Class	Subclass	Date	Examiner

SEARCH NOTES

Search Notes	Date	Examiner
EAST SEARCH	6/23/2008	HN

INTERFERENCE SEARCH

Class	Subclass	Date	Examiner

Index of Claims	Application/Control No.	Applicant(s)/Patent Under Reexamination
	10390549	LAINEMA, JANI
	Examiner	**Art Unit**
	HUY T NGUYEN	2621

✓	Rejected	-	Cancelled	N	Non-Elected	A	Appeal
=	Allowed	÷	Restricted	I	Interference	O	Objected

☐ Claims renumbered in the same order as presented by applicant ☐ CPA ☐ T.D. ☐ R.1.47

CLAIM		DATE								
Final	Original	06/23/2008								
	1	=								
	2	-								
	3	=								
	4	=								
	5	=								
	6	=								
	7	=								
	8	=								
	9	-								
	10	=								
	11	=								
	12	=								
	13	-								
	14	=								
	15	=								
	16	=								
	17	=								
	18	=								
	19	=								
	20	-								
	21	=								
	22	=								
	23	=								
	24	=								
	25	=								
	26	=								
	27	-								
	28	=								
	29	=								
	30	=								
	31	=								
	32	=								
	33	=								
	34	=								
	35	=								
	36	=								

Index of Claims	Application/Control No.	Applicant(s)/Patent Under Reexamination
	10390549	LAINEMA, JANI
	Examiner	**Art Unit**
	HUY T NGUYEN	2621

✓	Rejected	-	Cancelled	N	Non-Elected	A	Appeal
=	Allowed	÷	Restricted	I	Interference	O	Objected

☐ Claims renumbered in the same order as presented by applicant ☐ CPA ☐ T.D. ☐ R.1.47

CLAIM		DATE								
Final	Original	06/23/2008								
	37	=								
	38	=								
	39	=								
	40	=								
	41	=								
	42	=								
	43	=								
	44	=								
	45	=								
	46	=								
	47	=								
	48	=								
	49	=								
	50	=								
	51	=								
	52	=								
	53	=								
	54	=								
	55	=								
	56	=								
	57	=								
	58	=								
	59	=								
	60	=								
	61	=								
	62	=								
	63	=								
	64	=								
	65	=								
	66	=								
	67	=								
	68	=								
	69	=								
	70	=								

OIPE IAP18
SEP 02 2008
PATENT & TRADEMARK OFFICE

11n AF

944-001.105

Serial No. 10/390,549

IN THE UNITED STATES PATENT AND TRADEMARK OFFICE

Re: Application of: Jani Lainema

Attorney Docket: 944-001.105

Serial No. 10/390,549

Group Art Unit: 2621

Filed: March 14, 2003

Examiner: Huy Thanh Nguyen

For: **METHOD FOR CODING MOTION IN A VIDEO SEQUENCE**

Mailstop AF
Commissioner Of Patents
P.O. Box 1450
Alexandria, VA 22313-1450

AMENDMENT IN RESPONSE TO EX PARTE QUALYE ACTION

(Paper No. 20080623)

Sir:

In response to the *Ex parte Quayle* action, mailed June 30, 2008. Please amend the patent application as follows:

******If any fee and/or extension is required in addition to any enclosed herewith, please charge Account No. 23-0442.***

CERTIFICATE OF MAILING/TRANSMISSION (37 C.F.R. § 1.8(a))

I hereby certify that this correspondence is, on the date shown below, being:

MAILING

☒ Deposited with the United States Postal Service with sufficient postage as first class Mail in an envelope addressed to the Commissioner for Patents, PO Box 1450, Alexandria, VA 22313-1450.

FACSIMILE

☐ Transmitted by facsimile to the U.S. Patent and Trademark Office.

Date: August 28, 2008

Marie E. Forte
Signature
Marie E. Forte
(type or print name of person certifying)

OIPE
SEP 02 2008
PATENT & TRADEMARK OFFICE

IN THE UNITED STATES PATENT AND TRADEMARK OFFICE

Re: Application of: Jani Lainema

Attorney Docket: 944-001.105

Serial No. 10/390,549

Group Art Unit: 2621

Filed: March 14, 2003

Examiner: Huy Thanh Nguyen

For: **METHOD FOR CODING MOTION IN A VIDEO SEQUENCE**

Mailstop AF
Commissioner Of Patents
P.O. Box 1450
Alexandria, VA 22313-1450

AMENDMENT IN RESPONSE TO EX PARTE QUALYE ACTION

(Paper No. 20080623)

Sir:

In response to the *Ex parte Quayle* action, mailed June 30, 2008. Please amend the patent application as follows:

******If any fee and/or extension is required in addition to any enclosed herewith, please charge Account No. 23-0442.***

CERTIFICATE OF MAILING/TRANSMISSION (37 C.F.R. § 1.8(a))

I hereby certify that this correspondence is, on the date shown below, being:

MAILING

☒ Deposited with the United States Postal Service with sufficient postage as first class Mail in an envelope addressed to the Commissioner for Patents, PO Box 1450, Alexandria, VA 22313-1450.

FACSIMILE

☐ Transmitted by facsimile to the U.S. Patent and Trademark Office.

Date:_____

Signature
Marie E. Forte
(type or print name of person certifying)

Claim Amendments

Please amend claims 1, 8, 12 and 19 as follows:

1. (currently amended) A method of encoding a video sequence, the method comprising:

assigning a skip coding mode to a first segment of a first frame of the sequence;

assigning either a zero motion vector or a predicted non-zero motion vector for the skip coding mode for the first segment based at least in part on the motion information of a second segment neighboring the first segment; and

forming a prediction for the first segment with respect to a reference frame based at least in part on [[the]] an assigned motion vector, wherein the assigned motion vector is either the zero motion vector or the predicted non-zero motion vector; and

providing in an encoded bitstream an indication of the skip coding mode, wherein no further motion vector information for the first segment is coded in the encoded bitstream.

2. (canceled).

3. (previously presented) A method according to claim 1, wherein the second segment is a previously encoded segment neighboring the first segment.

4. (previously presented) A method according to claim 1, wherein if the motion in the second segment has an insignificant level of motion, the zero motion vector is assigned to the skip coding mode for the first segment and the prediction for the first segment is formed with respect to a corresponding segment of the reference frame associated with the zero motion vector.

5. (previously presented) A method according to claim 1, wherein if the motion in the second segment has a motion characteristic of a global or a regional motion,

the method further comprising:

deriving the predicted non-zero motion vector based at least in part on the motion vector of the second segment; and

the predicted non-zero motion vector is assigned to the skip coding mode of the first segment and the prediction for the first segment is formed by a motion compensated prediction with respect to the reference frame based at least in part on the predicted non-zero motion vector.

6. (previously presented) A method according to claim 1, further comprising:

performing an analysis of motion of a region surrounding the first segment;

if it is determined that the region surrounding the first segment has at least one of the following types of motion: continuous motion, motion having a common velocity, and motion having a certain deviation,

the method further comprising deriving the predicted non-zero motion vector based at least in part on the motion vector of the second segment; and

the predicted non-zero motion vector is assigned for the skip coding mode of the first segment, and the prediction for the first segment is formed by a motion compensated prediction with respect to the reference frame based at least in part on the predicted non-zero motion vector; and

otherwise, the zero motion vector is assigned for the skip coding mode of the first segment, and the prediction for the first segment is formed with respect to a corresponding segment of the reference frame associated with the zero motion vector.

7. (previously presented) A method according to claim 1, wherein if the second segment has zero motion vector, the zero motion vector is assigned for skip coding mode of the first segment and the prediction for the first segment is formed with respect to a corresponding segment of the reference frame associated with the zero motion vector.

8. (currently amended) A method of decoding an encoded video sequence, the method comprising:

receiving an indication of a skip coding mode for a first segment;

assigning either a zero motion vector or a predicted non-zero motion vector for the skip coding mode for the first segment based at least in part on the motion information of a second segment neighboring the first segment; and

forming a prediction for the first segment with respect to a reference frame based at least in part on [[the]] an assigned motion vector, wherein the assigned motion vector is either the zero motion vector or the predicted non-zero motion vector.

9. (canceled).

10. (previously presented) A method according to claim 8, further comprising:

performing an analysis of motion of a region surrounding the first segment;

if it is determined that the region surrounding the first segment has at least one of the following types of motion: continuous motion, motion having a common velocity, and motion having a certain deviation,

the method further comprising deriving the predicted non-zero motion vector based at least in part on the motion vector of the second segment; and

the predicted non-zero motion vector is assigned for the skip coding mode of the first segment; and the prediction for the first segment is formed by a motion compensated prediction with respect to the reference frame based at least in part on the predicted non-zero motion vector; and

otherwise, the zero motion vector is assigned for the skip coding mode of the first segment, and the prediction for the first segment is formed with respect to a corresponding segment of the reference frame associated with the zero motion vector.

11. (previously presented) A method according to claim 8, wherein if a segment in a previously decoded region surrounding the first segment has zero motion vector, the zero-motion vector is assigned to the skip coding mode of the first segment and the prediction for the first segment is formed with respect to a corresponding segment of the reference frame associated with the zero motion vector.

12. (currently amended) A video encoder for encoding a video sequence, the encoder comprises:

a coding controller for assigning a skip coding mode to a first segment;

a motion estimation block for

assigning either a zero motion vector or a predicted non-zero motion vector for the skip coding mode for the first segment based at least in part on the motion information of a second segment neighboring the first segment; and

forming a prediction for the first segment with respect to a reference frame based at least in part on [[the]] an assigned motion vector, wherein the assigned motion vector is either the zero motion vector or the predicted non-zero motion vector; and

a multiplexer for providing in an encoded bitstream an indication of the skip coding mode, wherein no further motion vector information for the first segment is coded in the encoded bitstream.

13. (canceled)

14. (previously presented) An encoder according to claim 12, wherein the second segment is a previously encoded segment neighboring the first segment.

15. (previously presented) An encoder according to claim 12, wherein if the second segment has an insignificant level of motion, the motion estimation block is arranged to assign the zero motion vector for the skip coding mode of the first segment and the prediction for the first segment is formed with respect to a corresponding segment of the reference frame associated with the zero motion vector.

16. (previously presented) An encoder according to claim 12, wherein if the second segment has a motion characteristic of a global or a regional motion,

the motion estimation block is arranged to derive the predicted non-zero motion vector based at least in part on the motion vector of the second segment; and

the predicted non-zero motion vector is assigned to the skip coding mode of the first segment and the prediction for the first segment is formed by a motion compensated prediction with respect to the reference frame based at least in part on the predicted non-zero motion vector.

17. (previously presented) An encoder according to claim 12, wherein the motion estimation block is arranged to perform an analysis of motion of a region surrounding the first segment;

if it is determined that the region surrounding the first segment has at least one of the following types of motion: continuous motion, motion having a common velocity, and motion having a certain deviation

the motion estimation block is further arranged to derive a predicted non-zero motion vector based at least in part on the motion vector of the second segment; and

the predicted non-zero motion vector is assigned for the skip coding mode of the first segment, and the prediction for the first segment is formed by a motion compensated prediction with respect to the reference frame based at least in part on the predicted non-zero motion vector; and

otherwise, the zero motion vector is assigned for the skip coding mode of the first segment, and the prediction for the first segment is formed with respect to a corresponding segment of the reference frame associated with the zero motion vector.

18. (previously presented) An encoder according to claim 12, wherein if a segment in a region surrounding the first segment has zero motion vector, the encoder is arranged to assign the zero motion vector for the skip coding mode of the first segment and the prediction for the first segment is formed with respect to a corresponding segment of the reference frame associated with the zero motion vector.

19. (currently amended) A video decoder for decoding an encoded video sequence, the decoder comprising:

a demultiplexer for receiving an indication of a skip coding mode assigned to a first segment;

a motion compensated prediction block for

assigning either a zero motion vector or a predicted non-zero motion vector for the skip coding mode for the first segment based at least in part on the motion information of a second segment neighboring the first segment; and

forming a prediction for the first segment with respect to a reference frame based at least in part on [[the]] an assigned motion vector, wherein the assigned motion vector is either the zero motion vector or the predicted non-zero motion vector.

20. (canceled)

21. (previously presented) A decoder according to claim 19, wherein if the second segment has an insignificant level of motion, the decoder is arranged to assign the zero-motion vector to the skip coding mode for the first segment and the prediction for the first segment is formed with respect to a corresponding segment of the reference frame associated with the zero motion vector.

22. (previously presented) A decoder according to claim 19, wherein if the second segment has a motion characteristic of a global or a regional motion, the decoder is arranged to derive the predicted non-zero motion vector based at least in part on the motion vector of the second segment; and
the predicted non-zero motion vector is assigned to the skip coding mode of the first segment and the prediction for the first segment is formed by a motion compensated prediction with respect to the reference frame based at least in part on the predicted non-zero motion vector.

23. (previously presented) A decoder according to claim 19, wherein the motion compensated prediction block is configured to perform an analysis of motion of a region surrounding the first segment; and

if it is determined that the region surrounding the first segment has at least one of the following types of motion: continuous motion, motion having a common velocity, motion having a certain deviation,

the motion compensated prediction block further configured to derive a predicted non-zero motion vector based at least in part on the motion vector of the second segment; and

the predicted non-zero motion vector is assigned for the skip coding mode of the first segment, and the prediction for the first segment is formed by a motion compensated prediction with respect to the reference frame based at least in part on the predicted non-zero motion vector; and

otherwise, the zero motion vector is assigned for the skip coding mode of the first segment, and the prediction for the first segment is formed with respect to a corresponding segment of the reference frame associated with the zero motion vector.

24. (previously presented) A decoder according to claim 20, wherein if a segment in a region surrounding the first segment has zero motion vector, the zero motion vector is assigned for the skip coding mode of the first segment, and the prediction for the first segment is formed with respect to a corresponding segment of the reference frame associated with the zero motion vector.

25. (previously presented) A multimedia terminal, comprising an encoder according to claim 12.

26. (previously presented) A multimedia terminal comprising a decoder according to claim 19.

27. (canceled).

28. (previously presented) A method according to claim 1, wherein if the second segment has a non-zero motion vector,

the method further comprising deriving the predicted non-zero motion vector based at least in part on the motion vector of the second segment; and

the predicted non-zero motion vector is assigned for the skip coding mode of the first segment; and the prediction for the first segment is formed by a motion compensated prediction with respect to the reference frame based at least in part on the predicted non-zero motion vector.

29. (currently amended) A method according to claim 1, wherein if the [[the]] second segment has a zero motion vector and the second segment is predicted using motion-compensated prediction from the reference picture, the zero motion vector is assigned to the skip coding mode of the first segment and the prediction for the first segment is formed with respect to a corresponding segment of the reference frame associated with the zero motion vector.

30. (previously presented) A method according to claim 1, wherein if the second segment has a zero motion vector and the second segment is predicted using motion-compensated prediction from a second reference picture immediately preceding the picture second segment belongs to, the zero motion vector is assigned to the skip coding mode of the first segment and the prediction for the first segment is formed with respect to a corresponding segment of the reference frame associated with the zero motion vector.

31. (previously presented) A method according to claim 1, further comprising:

performing an analysis of motion information of the second segment and motion information of a third segment neighboring the first segment; and

determining whether a region surrounding the first segment has a global or a regional motion in a video sequence based at least in part on a characteristic of the motion vector of the second segment and the motion vector of the third segment.

32. (previously presented) A method according to claim 31, wherein if the region surrounding the first segment has a global or a regional motion in a video sequence,

the method further comprising deriving the predicted non-zero motion vector based at least in part on the motion vector of the second segment and the motion vector of the third segment; and

the predicted non-zero motion vector is assigned for the skip coding mode of the first segment; and the prediction for the first segment is formed by a motion compensated prediction with respect to the reference frame based at least in part on the predicted non-zero motion vector.

33. (previously presented) A method according to claim 1, further comprising:

deriving the predicted non-zero motion vector based at least in part on the motion vector of the second segment.

34. (previously presented) A method according to claim 1, further comprising:

deriving the predicted non-zero motion vector based at least in part on the motion vector of the second segment and motion vector of a third segment neighboring the first segment.

35. (previously presented) A method according to claim 1, wherein no residual information is provided for the first segment in the encoded bitstream.

36. (previously presented) A method according to claim 1, further comprising:

deriving a predicted motion vector based at least in part on the motion vector of the second segment and motion vector of a third segment neighboring the first segment; and

if any component of the predicted motion vector has an absolute value larger than a certain threshold value, the predicted motion vector is assigned for the skip coding mode of the first segment, and the prediction for the first segment is formed by a motion compensated prediction with respect to the reference frame based at least in part on the predicted motion vector; and

if none of components of the predicted motion vector has an absolute value larger than the certain threshold value, the zero motion vector is assigned for the skip coding mode of the first segment, and the prediction for the first segment is formed with respect to a corresponding segment of the reference frame associated with the zero motion vector.

37. (previously presented) A method according to claim 8, wherein if the second segment has a zero motion vector, the zero motion vector is assigned to the skip coding mode of the first segment and the prediction for the first segment is formed with respect

to a corresponding segment of the reference frame associated with the zero motion vector.

38. (previously presented) A method according to claim 8, wherein if the second segment has an insignificant level of motion, the zero motion vector is assigned to the skip coding mode of the first segment and the prediction for the first segment is formed with respect to a corresponding segment of the reference frame associated with the zero motion vector .

39. (previously presented) A method according to claim 8, wherein if the second segment has a non-zero motion vector,

the method further comprising deriving the predicted non-zero motion vector based at least in part on the motion vector of the second segment; and

the predicted non-zero motion vector is assigned for the skip coding mode of the first segment; and the prediction for the first segment is formed by a motion compensated prediction with respect to the reference frame based at least in part on the predicted non-zero motion vector.

40. (previously presented) A method according to claim 8, characterized in that if the second segment has a motion characteristic of a global or a regional motion,

the method further comprising deriving the predicted non-zero motion vector based at least in part on the motion vector of the second segment; and

the predicted non-zero motion vector is assigned to the skip coding mode of the first segment and the prediction for the first segment is formed by a motion compensated prediction with respect to the reference frame based at least in part on the predicted non-zero motion vector.

41. (previously presented) A method according to claim 8, wherein if the second segment has a zero motion vector and the second segment is predicted using motion-compensated prediction from the reference picture, the zero motion vector is assigned to the skip coding mode of the first segment and the prediction for the first segment is

formed with respect to a corresponding segment of the reference frame associated with the zero motion vector.

42. (previously presented) A method according to claim 8, further comprising:

performing an analysis of motion information of the second segment and motion information of a third segment neighboring the first segment;

determining whether a region surrounding the first segment has a global or a regional motion in a video sequence based at least in part on a characteristic of the motion vector of the second segment and the motion vector of the third segment.

43. (previously presented) A method according to claim 42, wherein if the region surrounding the first segment has a global or a regional motion in a video sequence,

the method further comprising deriving the predicted non-zero motion vector based at least in part on the motion vector of the second segment and the motion vector of the third segment; and

the predicted non-zero motion vector is assigned for the skip coding mode of the first segment; and the prediction for the first segment is formed by a motion compensated prediction with respect to the reference frame based at least in part on the predicted non-zero motion vector.

44. (previously presented) A method according to claim 8, further comprising:

deriving the predicted non-zero motion vector based at least in part on the motion vector of the second segment.

45. (previously presented) A method according to claim 8, further comprising:

deriving the predicted non-zero motion vector based at least in part on the motion vector of the second segment and motion vector of a third segment neighboring the first segment.

46. (previously presented) A method according to claim 8, wherein no residual information is provided for the first segment in the encoded bitstream.

47. (previously presented) A method according to claim 8, further comprising:

deriving a predicted motion vector based at least in part on the motion vector of the second segment and motion vector of a third segment neighboring the first segment; and

if any component of the predicted motion vector has an absolute value larger than a certain threshold value, the predicted motion vector is assigned for the skip coding mode of the first segment, and the prediction for the first segment is formed by a motion compensated prediction with respect to the reference frame based at least in part on the predicted motion vector; and

if none of components of the predicted motion vector has an absolute value larger than the certain threshold value, the zero motion vector is assigned for the skip coding mode of the first segment, and the prediction for the first segment is formed with respect to a corresponding segment of the reference frame associated with the zero motion vector.

48. (previously presented) A method according to claim 1, wherein if the second segment has a zero motion vector and the second segment is predicted using motion-compensated prediction from a second reference picture immediately preceding the picture second segment belongs to, the zero motion vector is assigned to the skip coding mode of the first segment and the prediction for the first segment is formed with respect to a corresponding segment of the reference frame associated with the zero motion vector.

49. (previously presented) An encoder according to claim 12, wherein if the second segment has a non-zero motion vector,

the motion estimation block is further arranged to derive the predicted non-zero motion vector based at least in part on the motion vector of the second segment; and

the predicted non-zero motion vector is assigned for the skip coding mode for the first segment; and the prediction for the first segment is formed by a motion compensated

prediction with respect to the reference frame based at least in part on the predicted non-zero motion vector.

50. (previously presented) An encoder according to claim 12, further wherein the motion estimation block is further arranged to:

perform an analysis of motion information of the second segment and motion information of a third segment neighboring the first segment;

determine whether a region surrounding the first segment has a global or a regional motion in a video sequence based at least in part on a characteristic of the motion vector of the second segment and the motion vector of the third segment.

51. (previously presented) An encoder according to claim 50, wherein if the region surrounding the first segment has a global or a regional motion in a video sequence,

the motion estimation block further arranged to derive the predicted non-zero motion vector based at least in part on the motion vector of the second segment and the motion vector of the third segment; and

the predicted non-zero motion vector is assigned for the skip coding mode for the first segment; and the prediction for the first segment is formed by a motion compensated prediction with respect to the reference frame based at least in part on the predicted non-zero motion vector.

52. (previously presented) An encoder according to claim 12, wherein the motion estimation block further arranged to derive the predicted non-zero motion vector based at least in part on the motion vector of the second segment.

53. (previously presented) An encoder according to claim 12, wherein the motion estimation block further arranged to derive the predicted non-zero motion vector based at least in part on the motion vector of the second segment and motion vector of a third segment neighboring the first segment.

54. (previously presented) An encoder according to claim 12, wherein no residual information is provided for the first segment in the encoded bitstream.

55. (previously presented) An encoder according to claim 12, wherein the motion estimation block further arranged to derive a predicted motion vector based at least in part on the motion vector of the second segment and motion vector of a third segment neighboring the first segment; and

if any component of the predicted motion vector has an absolute value larger than a certain threshold value, the predicted motion vector is assigned for the skip coding mode of the first segment, and the prediction for the first segment is formed by a motion compensated prediction with respect to the reference frame based at least in part on the predicted motion vector; and

if none of components of the predicted motion vector has an absolute value larger than the certain threshold value, the zero motion vector is assigned for the skip coding mode of the first segment, and the prediction for the first segment is formed with respect to a corresponding segment of the reference frame associated with the zero motion vector.

56. (previously presented) An encoder according to claim 12, wherein if the second segment has a zero motion vector, the zero motion vector is assigned to the skip coding mode of the first segment and the prediction for the first segment is formed with respect to a corresponding segment of the reference frame associated with the zero motion vector.

57. (previously presented) An encoder according to claim 12, wherein if the second segment has a zero motion vector and the second segment is predicted using motion-compensated prediction from the reference picture, the zero motion vector is assigned to the skip coding mode of the first segment and the prediction for the first segment is formed with respect to a corresponding segment of the reference frame associated with the zero motion vector.

58. (previously presented) An encoder according to claim 12, wherein if the second segment has a zero motion vector and the second segment is predicted using motion-compensated prediction from a second reference picture immediately preceding the picture second segment belongs to, the zero motion vector is assigned to the skip coding mode of the first segment and the prediction for the first segment is formed with respect to a corresponding segment of the reference frame associated with the zero motion vector.

59. (previously presented) A decoder according to claim 19, wherein if the second segment has a zero motion vector, the zero-motion vector is assigned to the skip coding mode for the first segment and the prediction for the first segment is formed with respect to a corresponding segment of the reference frame associated with the zero motion vector.

60. (previously presented) A decoder according to claim 19, wherein if the second segment has a non-zero motion vector,

the motion compensated prediction block further arranged to derive the predicted non-zero motion vector based at least in part on the motion vector of the second segment; and

the predicted non-zero motion vector is assigned for the skip coding mode for the first segment; and the prediction for the first segment is formed by a motion compensated prediction with respect to the reference frame based at least in part on the predicted non-zero motion vector.

61. (previously presented) A decoder according to claim 19, wherein the motion estimation block further arranged to:

perform an analysis of motion information of the second segment and motion information of a third segment neighboring the first segment;

determine whether a region surrounding the first segment has a global or a regional motion in a video sequence based at least in part on a characterictic of the motion vector of the second segment and the motion vector of the third segment.

62. (previously presented) A decoder according to claim 61, wherein if the region surrounding the first segment has a global or a regional motion in a video sequence,

the motion estimation block further arranged to derive the predicted non-zero motion vector based at least in part on the motion vector of the second segment and the motion vector of the third segment; and

the predicted non-zero motion vector is assigned for the skip coding mode for the first segment; and the prediction for the first segment is formed by a motion compensated prediction with respect to the reference frame based at least in part on the predicted non-zero motion vector.

63. (previously presented) A decoder according to claim 19, wherein the motion estimation block further arranged to derive the predicted non-zero motion vector based at least in part on the motion vector of the second segment.

64. (previously presented) A decoder according to claim 19, wherein the motion estimation block further arranged to derive the predicted non-zero motion vector based at least in part on the motion vector of the second segment and motion vector of a third segment neighboring the first segment.

65. (previously presented) A decoder according to claim 19, wherein no residual information is provided for the first segment in an encoded bitstream.

66. (previously presented) A decoder according to claim 19, wherein the motion estimation block further arranged to derive a predicted motion vector based at least in part on the motion vector of the second segment and motion vector of a third segment neighboring the first segment; and

if any component of the predicted motion vector has an absolute value larger than a certain threshold value, the predicted motion vector is assigned for the skip coding mode of the first segment, and the prediction for the first segment is formed by a motion

compensated prediction with respect to the reference frame based at least in part on the predicted motion vector; and

if none of components of the predicted motion vector has an absolute value larger than the certain threshold value, the zero motion vector is assigned for the skip coding mode of the first segment, and the prediction for the first segment is formed with respect to a corresponding segment of the reference frame associated with the zero motion vector.

67. (previously presented) A decoder according to claim 19, wherein if the second segment has a zero motion vector and the second segment is predicted using motion-compensated prediction from the reference picture, the zero motion vector is assigned to the skip coding mode of the first segment and the prediction for the first segment is formed with respect to a corresponding segment of the reference frame associated with the zero motion vector.

68. (previously presented) A decoder according to claim 19, wherein if the second segment has a zero motion vector and the second segment is predicted using motion-compensated prediction from a second reference picture immediately preceding the picture second segment belongs to, the zero motion vector is assigned to the skip coding mode of the first segment and the prediction for the first segment is formed with respect to a corresponding segment of the reference frame associated with the zero motion vector.

69. (previously presented) A decoder according to claim 19, wherein no further motion vector information for the first segment is retrieved from an encoded bitstream.

70. (previously presented) A method according to claim 8, wherein no further motion vector information for the first segment is retrieved from the encoded bitstream.

REMARKS

In the patent application, claims 1, 3-8, 10-12, 14-19, 21-26 and 28-70 are pending (see Appendix). In the office action, claims 1, 3-5, 7, 8, 11, 12, 14-16, 18-19, 21, 22, 24-26 and 28-70 are allowable except for some formal matters.

Applicant has amended claims 1, 8, 12 and 19 to include the limitation that the assigned motion vector is either the zero motion vector or the predicted non-zero motion vector.

The amendment is made to repeat part of the claim limitations in claim 1.

No new matter has been introduced.

At section 1 of the office action, the Examiner states that it is not clear whether the term "assigned motion vector" in claims 1, 8, 12 and 19 refers to "the non-zero motion vector" or "the predicted non-zero motion vector".

As amended, claims 1, 8, 12 and 19 include the limitation that the assigned motion vector is <u>either</u> the zero motion vector <u>or</u> the predicted non-zero motion vector.

Applicant believes that the amendments to claims 1, 8, 12 and 19 have placed the patent application in condition for allowance. Early allowance of all pending claims is earnestly solicited.

Respectfully submitted,

Kenneth Q. Lao
Registration No. 40,061

Date:_____

WARE, FRESSOLA, VAN DER SLUYS
& ADOLPHSON LLP
Bradford Green, Building 5
755 Main Street, PO Box 224
Monroe, CT 06468
(203) 261-1234

REMARKS

In the patent application, claims 1, 3-8, 10-12, 14-19, 21-26 and 28-70 are pending (see Appendix). In the office action, claims 1, 3-5, 7, 8, 11, 12, 14-16, 18-19, 21, 22, 24-26 and 28-70 are allowable except for some formal matters.

Applicant has amended claims 1, 8, 12 and 19 to include the limitation that the assigned motion vector is either the zero motion vector or the predicted non-zero motion vector.

The amendment is made to repeat part of the claim limitations in claim 1.

No new matter has been introduced.

At section 1 of the office action, the Examiner states that it is not clear whether the term "assigned motion vector" in claims 1, 8, 12 and 19 refers to "the non-zero motion vector" or "the predicted non-zero motion vector".

As amended, claims 1, 8, 12 and 19 include the limitation that the assigned motion vector is <u>either</u> the zero motion vector <u>or</u> the predicted non-zero motion vector.

Applicant believes that the amendments to claims 1, 8, 12 and 19 have placed the patent application in condition for allowance. Early allowance of all pending claims is earnestly solicited.

Respectfully submitted,

Ken Lao

Kenneth Q. Lao
Registration No. 40,061

Date: August 28, 2008

WARE, FRESSOLA, VAN DER SLUYS
& ADOLPHSON LLP
Bradford Green, Building 5
755 Main Street, PO Box 224
Monroe, CT 06468
(203) 261-1234

PTO/SB/06 (07-06)
Approved for use through 1/31/2007. OMB 0651-0032
U.S. Patent and Trademark Office; U.S. DEPARTMENT OF COMMERCE
Under the Paperwork Reduction Act of 1995, no persons are required to respond to a collection of information unless it displays a valid OMB control number.

PATENT APPLICATION FEE DETERMINATION RECORD

Substitute for Form PTO-875

Application or Docket Number	Filing Date	☐ To be Mailed
10/390,549	03/14/2003	

APPLICATION AS FILED – PART I

FOR	(Column 1) NUMBER FILED	(Column 2) NUMBER EXTRA	SMALL ENTITY ☐ RATE ($)	SMALL ENTITY FEE ($)	OR	OTHER THAN SMALL ENTITY RATE ($)	OTHER THAN SMALL ENTITY FEE ($)
☐ BASIC FEE (37 CFR 1.16(a), (b), or (c))	N/A	N/A	N/A			N/A	
☐ SEARCH FEE (37 CFR 1.16(k), (i), or (m))	N/A	N/A	N/A			N/A	
☐ EXAMINATION FEE (37 CFR 1.16(o), (p), or (q))	N/A	N/A	N/A			N/A	
TOTAL CLAIMS (37 CFR 1.16(i))	minus 20 =	*	X $ =		OR	X $ =	
INDEPENDENT CLAIMS (37 CFR 1.16(h))	minus 3 =	*	X $ =			X $ =	
☐ APPLICATION SIZE FEE (37 CFR 1.16(s))	If the specification and drawings exceed 100 sheets of paper, the application size fee due is $250 ($125 for small entity) for each additional 50 sheets or fraction thereof. See 35 U.S.C. 41(a)(1)(G) and 37 CFR 1.16(s).						
☐ MULTIPLE DEPENDENT CLAIM PRESENT (37 CFR 1.16(j))							
* If the difference in column 1 is less than zero, enter "0" in column 2.			TOTAL			TOTAL	

APPLICATION AS AMENDED – PART II

AMENDMENT 09/02/2008	(Column 1) CLAIMS REMAINING AFTER AMENDMENT		(Column 2) HIGHEST NUMBER PREVIOUSLY PAID FOR	(Column 3) PRESENT EXTRA	SMALL ENTITY RATE ($)	SMALL ENTITY ADDITIONAL FEE ($)	OR	OTHER THAN SMALL ENTITY RATE ($)	OTHER THAN SMALL ENTITY ADDITIONAL FEE ($)
Total (37 CFR 1.16(i))	* 65	Minus	** 77	= 0	X $ =		OR	X $50=	0
Independent (37 CFR 1.16(h))	* 4	Minus	***7	= 0	X $ =		OR	X $210=	0
☐ Application Size Fee (37 CFR 1.16(s))									
☐ FIRST PRESENTATION OF MULTIPLE DEPENDENT CLAIM (37 CFR 1.16(j))							OR		
					TOTAL ADD'L FEE		OR	TOTAL ADD'L FEE	0

AMENDMENT	(Column 1) CLAIMS REMAINING AFTER AMENDMENT		(Column 2) HIGHEST NUMBER PREVIOUSLY PAID FOR	(Column 3) PRESENT EXTRA	RATE ($)	ADDITIONAL FEE ($)	OR	RATE ($)	ADDITIONAL FEE ($)
Total (37 CFR 1.16(i))	*	Minus	**	=	X $ =		OR	X $ =	
Independent (37 CFR 1.16(h))	*	Minus	***	=	X $ =		OR	X $ =	
☐ Application Size Fee (37 CFR 1.16(s))									
☐ FIRST PRESENTATION OF MULTIPLE DEPENDENT CLAIM (37 CFR 1.16(j))							OR		
					TOTAL ADD'L FEE		OR	TOTAL ADD'L FEE	

* If the entry in column 1 is less than the entry in column 2, write "0" in column 3.
** If the "Highest Number Previously Paid For" IN THIS SPACE is less than 20, enter "20".
*** If the "Highest Number Previously Paid For" IN THIS SPACE is less than 3, enter "3".
The "Highest Number Previously Paid For" (Total or Independent) is the highest number found in the appropriate box in column 1.

Legal Instrument Examiner:
/MARQUETTA MCGEE/

This collection of information is required by 37 CFR 1.16. The information is required to obtain or retain a benefit by the public which is to file (and by the USPTO to process) an application. Confidentiality is governed by 35 U.S.C. 122 and 37 CFR 1.14. This collection is estimated to take 12 minutes to complete, including gathering, preparing, and submitting the completed application form to the USPTO. Time will vary depending upon the individual case. Any comments on the amount of time you require to complete this form and/or suggestions for reducing this burden, should be sent to the Chief Information Officer, U.S. Patent and Trademark Office, U.S. Department of Commerce, P.O. Box 1450, Alexandria, VA 22313-1450. DO NOT SEND FEES OR COMPLETED FORMS TO THIS ADDRESS. **SEND TO: Commissioner for Patents, P.O. Box 1450, Alexandria, VA 22313-1450.**
If you need assistance in completing the form, call 1-800-PTO-9199 and select option 2.

OIPE IAP88
OCT 0 3 2008
PATENT & TRADEMARK OFFICE

IFW

IN THE UNITED STATES PATENT AND TRADEMARK OFFICE

Re: Application of: Jani Lainema

Attorney Docket: 944-001.105

Serial No. 10/390,549

Group Art Unit: 2621

Filed: March 14, 2003

Examiner: Huy Thanh Nguyen

For: **METHOD FOR CODING MOTION IN A VIDEO SEQUENCE**

Mailstop AF
Commissioner Of Patents
P.O. Box 1450
Alexandria, VA 22313-1450

SUPPLEMENTAL AMENDMENT

Sir:

This is a supplemental amendment to the amendment, filed August 28, 2008, in response to the *Ex parte Quayle* action, mailed June 30, 2008. Please amend the patent application as follows:

******If any fee and/or extension is required in addition to any enclosed herewith, please charge Account No. 23-0442.***

CERTIFICATE OF MAILING/TRANSMISSION (37 C.F.R. § 1.8(a))

I hereby certify that this correspondence is, on the date shown below, being:

MAILING

☒ Deposited with the United States Postal Service with sufficient postage as first class Mail in an envelope addressed to the Commissioner for Patents, PO Box 1450, Alexandria, VA 22313-1450.

FACSIMILE

☐ Transmitted by facsimile to the U.S. Patent and Trademark Office.

Date: Sept 30, 2008

Signature
Marie E. Forte
(type or print name of person certifying)

Claim Amendments

Please amend claims 1, 8, 12 and 19 as follows:

1. (currently amended) A method of encoding a video sequence, the method comprising:

assigning a skip coding mode to a first segment of a first frame of the sequence;

assigning either a zero motion vector or a predicted non-zero motion vector for the skip coding mode for the first segment based at least in part on the motion information of a second segment neighboring the first segment; and

forming a prediction for the first segment with respect to a reference frame based at least in part on [[an]] the assigned motion vector for the skip coding mode, wherein the assigned motion vector is ~~either~~ one of the zero motion vector [[or]] and the predicted non-zero motion vector; and

providing in an encoded bitstream an indication of the skip coding mode, wherein no further motion vector information for the first segment is coded in the encoded bitstream.

2. (canceled).

3. (previously presented) A method according to claim 1, wherein the second segment is a previously encoded segment neighboring the first segment.

4. (previously presented) A method according to claim 1, wherein if the motion in the second segment has an insignificant level of motion, the zero motion vector is assigned to the skip coding mode for the first segment and the prediction for the first segment is formed with respect to a corresponding segment of the reference frame associated with the zero motion vector.

5. (previously presented) A method according to claim 1, wherein if the motion in the second segment has a motion characteristic of a global or a regional motion,

the method further comprising:

deriving the predicted non-zero motion vector based at least in part on the motion vector of the second segment; and

the predicted non-zero motion vector is assigned to the skip coding mode of the first segment and the prediction for the first segment is formed by a motion compensated prediction with respect to the reference frame based at least in part on the predicted non-zero motion vector.

6. (previously presented) A method according to claim 1, further comprising:

performing an analysis of motion of a region surrounding the first segment;

if it is determined that the region surrounding the first segment has at least one of the following types of motion: continuous motion, motion having a common velocity, and motion having a certain deviation,

the method further comprising deriving the predicted non-zero motion vector based at least in part on the motion vector of the second segment; and

the predicted non-zero motion vector is assigned for the skip coding mode of the first segment, and the prediction for the first segment is formed by a motion compensated prediction with respect to the reference frame based at least in part on the predicted non-zero motion vector; and

otherwise, the zero motion vector is assigned for the skip coding mode of the first segment, and the prediction for the first segment is formed with respect to a corresponding segment of the reference frame associated with the zero motion vector.

7. (previously presented) A method according to claim 1, wherein if the second segment has zero motion vector, the zero motion vector is assigned for skip coding mode of the first segment and the prediction for the first segment is formed with respect to a corresponding segment of the reference frame associated with the zero motion vector.

8. (currently amended) A method of decoding an encoded video sequence, the method comprising:

receiving an indication of a skip coding mode for a first segment;

assigning either a zero motion vector or a predicted non-zero motion vector for the skip coding mode for the first segment based at least in part on the motion information of a second segment neighboring the first segment; and

forming a prediction for the first segment with respect to a reference frame based at least in part on [[an]] the assigned motion vector for the skip coding mode, wherein the assigned motion vector is ~~either~~ one of the zero motion vector [[or]] and the predicted non-zero motion vector.

9. (canceled).

10. (previously presented) A method according to claim 8, further comprising:

performing an analysis of motion of a region surrounding the first segment;

if it is determined that the region surrounding the first segment has at least one of the following types of motion: continuous motion, motion having a common velocity, and motion having a certain deviation,

the method further comprising deriving the predicted non-zero motion vector based at least in part on the motion vector of the second segment; and

the predicted non-zero motion vector is assigned for the skip coding mode of the first segment; and the prediction for the first segment is formed by a motion compensated prediction with respect to the reference frame based at least in part on the predicted non-zero motion vector; and

otherwise, the zero motion vector is assigned for the skip coding mode of the first segment, and the prediction for the first segment is formed with respect to a corresponding segment of the reference frame associated with the zero motion vector.

11. (previously presented) A method according to claim 8, wherein if a segment in a previously decoded region surrounding the first segment has zero motion vector, the zero-motion vector is assigned to the skip coding mode of the first segment and the prediction for the first segment is formed with respect to a corresponding segment of the reference frame associated with the zero motion vector.

12. (currently amended) A video encoder for encoding a video sequence, the encoder comprises:

a coding controller for assigning a skip coding mode to a first segment;

a motion estimation block for

assigning either a zero motion vector or a predicted non-zero motion vector for the skip coding mode for the first segment based at least in part on the motion information of a second segment neighboring the first segment; and

forming a prediction for the first segment with respect to a reference frame based at least in part on [[an]] the assigned motion vector for the skip coding mode, wherein the assigned motion vector is ~~either~~ one of the zero motion vector [[or]] and the predicted non-zero motion vector; and

a multiplexer for providing in an encoded bitstream an indication of the skip coding mode, wherein no further motion vector information for the first segment is coded in the encoded bitstream.

13. (canceled)

14. (previously presented) An encoder according to claim 12, wherein the second segment is a previously encoded segment neighboring the first segment.

15. (previously presented) An encoder according to claim 12, wherein if the second segment has an insignificant level of motion, the motion estimation block is arranged to assign the zero motion vector for the skip coding mode of the first segment and the prediction for the first segment is formed with respect to a corresponding segment of the reference frame associated with the zero motion vector.

16. (previously presented) An encoder according to claim 12, wherein if the second segment has a motion characteristic of a global or a regional motion,

the motion estimation block is arranged to derive the predicted non-zero motion vector based at least in part on the motion vector of the second segment; and

the predicted non-zero motion vector is assigned to the skip coding mode of the first segment and the prediction for the first segment is formed by a motion compensated prediction with respect to the reference frame based at least in part on the predicted non-zero motion vector.

17. (previously presented) An encoder according to claim 12, wherein the motion estimation block is arranged to perform an analysis of motion of a region surrounding the first segment;

if it is determined that the region surrounding the first segment has at least one of the following types of motion: continuous motion, motion having a common velocity, and motion having a certain deviation

the motion estimation block is further arranged to derive a predicted non-zero motion vector based at least in part on the motion vector of the second segment; and

the predicted non-zero motion vector is assigned for the skip coding mode of the first segment, and the prediction for the first segment is formed by a motion compensated prediction with respect to the reference frame based at least in part on the predicted non-zero motion vector; and

otherwise, the zero motion vector is assigned for the skip coding mode of the first segment, and the prediction for the first segment is formed with respect to a corresponding segment of the reference frame associated with the zero motion vector.

18. (previously presented) An encoder according to claim 12, wherein if a segment in a region surrounding the first segment has zero motion vector, the encoder is arranged to assign the zero motion vector for the skip coding mode of the first segment and the prediction for the first segment is formed with respect to a corresponding segment of the reference frame associated with the zero motion vector.

19. (currently amended) A video decoder for decoding an encoded video sequence, the decoder comprising:

a demultiplexer for receiving an indication of a skip coding mode assigned to a first segment;

a motion compensated prediction block for

assigning either a zero motion vector or a predicted non-zero motion vector for the skip coding mode for the first segment based at least in part on the motion information of a second segment neighboring the first segment; and

forming a prediction for the first segment with respect to a reference frame based at least in part on [[an]] the assigned motion vector for the skip coding mode, wherein the assigned motion vector is ~~either~~ one of the zero motion vector [[or]] and the predicted non-zero motion vector.

20. (canceled)

21. (previously presented) A decoder according to claim 19, wherein if the second segment has an insignificant level of motion, the decoder is arranged to assign the zero-motion vector to the skip coding mode for the first segment and the prediction for the first segment is formed with respect to a corresponding segment of the reference frame associated with the zero motion vector.

22. (previously presented) A decoder according to claim 19, wherein if the second segment has a motion characteristic of a global or a regional motion, the decoder is arranged to derive the predicted non-zero motion vector based at least in part on the motion vector of the second segment; and
the predicted non-zero motion vector is assigned to the skip coding mode of the first segment and the prediction for the first segment is formed by a motion compensated prediction with respect to the reference frame based at least in part on the predicted non-zero motion vector.

23. (previously presented) A decoder according to claim 19, wherein the motion compensated prediction block is configured to perform an analysis of motion of a region surrounding the first segment; and

if it is determined that the region surrounding the first segment has at least one of the following types of motion: continuous motion, motion having a common velocity, motion having a certain deviation,

the motion compensated prediction block further configured to derive a predicted non-zero motion vector based at least in part on the motion vector of the second segment; and

the predicted non-zero motion vector is assigned for the skip coding mode of the first segment, and the prediction for the first segment is formed by a motion compensated prediction with respect to the reference frame based at least in part on the predicted non-zero motion vector; and

otherwise, the zero motion vector is assigned for the skip coding mode of the first segment, and the prediction for the first segment is formed with respect to a corresponding segment of the reference frame associated with the zero motion vector.

24. (previously presented) A decoder according to claim 20, wherein if a segment in a region surrounding the first segment has zero motion vector, the zero motion vector is assigned for the skip coding mode of the first segment, and the prediction for the first segment is formed with respect to a corresponding segment of the reference frame associated with the zero motion vector.

25. (previously presented) A multimedia terminal, comprising an encoder according to claim 12.

26. (previously presented) A multimedia terminal comprising a decoder according to claim 19.

27. (canceled).

28. (previously presented) A method according to claim 1, wherein if the second segment has a non-zero motion vector,

the method further comprising deriving the predicted non-zero motion vector based at least in part on the motion vector of the second segment; and

the predicted non-zero motion vector is assigned for the skip coding mode of the first segment; and the prediction for the first segment is formed by a motion compensated prediction with respect to the reference frame based at least in part on the predicted non-zero motion vector.

29. (previously presented) A method according to claim 1, wherein if the second segment has a zero motion vector and the second segment is predicted using motion-compensated prediction from the reference picture, the zero motion vector is assigned to the skip coding mode of the first segment and the prediction for the first segment is formed with respect to a corresponding segment of the reference frame associated with the zero motion vector.

30. (previously presented) A method according to claim 1, wherein if the second segment has a zero motion vector and the second segment is predicted using motion-compensated prediction from a second reference picture immediately preceding the picture second segment belongs to, the zero motion vector is assigned to the skip coding mode of the first segment and the prediction for the first segment is formed with respect to a corresponding segment of the reference frame associated with the zero motion vector.

31. (previously presented) A method according to claim 1, further comprising:

performing an analysis of motion information of the second segment and motion information of a third segment neighboring the first segment; and

determining whether a region surrounding the first segment has a global or a regional motion in a video sequence based at least in part on a characteristic of the motion vector of the second segment and the motion vector of the third segment.

32. (previously presented) A method according to claim 31, wherein if the region surrounding the first segment has a global or a regional motion in a video sequence,

the method further comprising deriving the predicted non-zero motion vector based at least in part on the motion vector of the second segment and the motion vector of the third segment; and

the predicted non-zero motion vector is assigned for the skip coding mode of the first segment; and the prediction for the first segment is formed by a motion compensated prediction with respect to the reference frame based at least in part on the predicted non-zero motion vector.

33. (previously presented) A method according to claim 1, further comprising:

deriving the predicted non-zero motion vector based at least in part on the motion vector of the second segment.

34. (previously presented) A method according to claim 1, further comprising:

deriving the predicted non-zero motion vector based at least in part on the motion vector of the second segment and motion vector of a third segment neighboring the first segment.

35. (previously presented) A method according to claim 1, wherein no residual information is provided for the first segment in the encoded bitstream.

36. (previously presented) A method according to claim 1, further comprising:

deriving a predicted motion vector based at least in part on the motion vector of the second segment and motion vector of a third segment neighboring the first segment; and

if any component of the predicted motion vector has an absolute value larger than a certain threshold value, the predicted motion vector is assigned for the skip coding mode of the first segment, and the prediction for the first segment is formed by a motion compensated prediction with respect to the reference frame based at least in part on the predicted motion vector; and

if none of components of the predicted motion vector has an absolute value larger than the certain threshold value, the zero motion vector is assigned for the skip coding

mode of the first segment, and the prediction for the first segment is formed with respect to a corresponding segment of the reference frame associated with the zero motion vector.

37. (previously presented) A method according to claim 8, wherein if the second segment has a zero motion vector, the zero motion vector is assigned to the skip coding mode of the first segment and the prediction for the first segment is formed with respect to a corresponding segment of the reference frame associated with the zero motion vector.

38. (previously presented) A method according to claim 8, wherein if the second segment has an insignificant level of motion, the zero motion vector is assigned to the skip coding mode of the first segment and the prediction for the first segment is formed with respect to a corresponding segment of the reference frame associated with the zero motion vector .

39. (previously presented) A method according to claim 8, wherein if the second segment has a non-zero motion vector,

the method further comprising deriving the predicted non-zero motion vector based at least in part on the motion vector of the second segment; and

the predicted non-zero motion vector is assigned for the skip coding mode of the first segment; and the prediction for the first segment is formed by a motion compensated prediction with respect to the reference frame based at least in part on the predicted non-zero motion vector.

40. (previously presented) A method according to claim 8, characterized in that if the second segment has a motion characteristic of a global or a regional motion,

the method further comprising deriving the predicted non-zero motion vector based at least in part on the motion vector of the second segment; and

the predicted non-zero motion vector is assigned to the skip coding mode of the first segment and the prediction for the first segment is formed by a motion compensated

prediction with respect to the reference frame based at least in part on the predicted non-zero motion vector.

41. (previously presented) A method according to claim 8, wherein if the second segment has a zero motion vector and the second segment is predicted using motion-compensated prediction from the reference picture, the zero motion vector is assigned to the skip coding mode of the first segment and the prediction for the first segment is formed with respect to a corresponding segment of the reference frame associated with the zero motion vector.

42. (previously presented) A method according to claim 8, further comprising:

performing an analysis of motion information of the second segment and motion information of a third segment neighboring the first segment;

determining whether a region surrounding the first segment has a global or a regional motion in a video sequence based at least in part on a characteristic of the motion vector of the second segment and the motion vector of the third segment.

43. (previously presented) A method according to claim 42, wherein if the region surrounding the first segment has a global or a regional motion in a video sequence,

the method further comprising deriving the predicted non-zero motion vector based at least in part on the motion vector of the second segment and the motion vector of the third segment; and

the predicted non-zero motion vector is assigned for the skip coding mode of the first segment; and the prediction for the first segment is formed by a motion compensated prediction with respect to the reference frame based at least in part on the predicted non-zero motion vector.

44. (previously presented) A method according to claim 8, further comprising:

deriving the predicted non-zero motion vector based at least in part on the motion vector of the second segment.

45. (previously presented) A method according to claim 8, further comprising:

deriving the predicted non-zero motion vector based at least in part on the motion vector of the second segment and motion vector of a third segment neighboring the first segment.

46. (previously presented) A method according to claim 8, wherein no residual information is provided for the first segment in the encoded bitstream.

47. (previously presented) A method according to claim 8, further comprising:

deriving a predicted motion vector based at least in part on the motion vector of the second segment and motion vector of a third segment neighboring the first segment; and

if any component of the predicted motion vector has an absolute value larger than a certain threshold value, the predicted motion vector is assigned for the skip coding mode of the first segment, and the prediction for the first segment is formed by a motion compensated prediction with respect to the reference frame based at least in part on the predicted motion vector; and

if none of components of the predicted motion vector has an absolute value larger than the certain threshold value, the zero motion vector is assigned for the skip coding mode of the first segment, and the prediction for the first segment is formed with respect to a corresponding segment of the reference frame associated with the zero motion vector.

48. (previously presented) A method according to claim 1, wherein if the second segment has a zero motion vector and the second segment is predicted using motion-compensated prediction from a second reference picture immediately preceding the picture second segment belongs to, the zero motion vector is assigned to the skip coding mode of the first segment and the prediction for the first segment is formed with respect to a corresponding segment of the reference frame associated with the zero motion vector.

49. (previously presented) An encoder according to claim 12, wherein if the second segment has a non-zero motion vector,

the motion estimation block is further arranged to derive the predicted non-zero motion vector based at least in part on the motion vector of the second segment; and

the predicted non-zero motion vector is assigned for the skip coding mode for the first segment; and the prediction for the first segment is formed by a motion compensated prediction with respect to the reference frame based at least in part on the predicted non-zero motion vector.

50. (previously presented) An encoder according to claim 12, further wherein the motion estimation block is further arranged to:

perform an analysis of motion information of the second segment and motion information of a third segment neighboring the first segment;

determine whether a region surrounding the first segment has a global or a regional motion in a video sequence based at least in part on a characteristic of the motion vector of the second segment and the motion vector of the third segment.

51. (previously presented) An encoder according to claim 50, wherein if the region surrounding the first segment has a global or a regional motion in a video sequence,

the motion estimation block further arranged to derive the predicted non-zero motion vector based at least in part on the motion vector of the second segment and the motion vector of the third segment; and

the predicted non-zero motion vector is assigned for the skip coding mode for the first segment; and the prediction for the first segment is formed by a motion compensated prediction with respect to the reference frame based at least in part on the predicted non-zero motion vector.

52. (previously presented) An encoder according to claim 12, wherein the motion estimation block further arranged to derive the predicted non-zero motion vector based at least in part on the motion vector of the second segment.

53. (previously presented) An encoder according to claim 12, wherein the motion estimation block further arranged to derive the predicted non-zero motion vector based at least in part on the motion vector of the second segment and motion vector of a third segment neighboring the first segment.

54. (previously presented) An encoder according to claim 12, wherein no residual information is provided for the first segment in the encoded bitstream.

55. (previously presented) An encoder according to claim 12, wherein the motion estimation block further arranged to derive a predicted motion vector based at least in part on the motion vector of the second segment and motion vector of a third segment neighboring the first segment; and

if any component of the predicted motion vector has an absolute value larger than a certain threshold value, the predicted motion vector is assigned for the skip coding mode of the first segment, and the prediction for the first segment is formed by a motion compensated prediction with respect to the reference frame based at least in part on the predicted motion vector; and

if none of components of the predicted motion vector has an absolute value larger than the certain threshold value, the zero motion vector is assigned for the skip coding mode of the first segment, and the prediction for the first segment is formed with respect to a corresponding segment of the reference frame associated with the zero motion vector.

56. (previously presented) An encoder according to claim 12, wherein if the second segment has a zero motion vector, the zero motion vector is assigned to the skip coding mode of the first segment and the prediction for the first segment is formed with respect to a corresponding segment of the reference frame associated with the zero motion vector.

57. (previously presented) An encoder according to claim 12, wherein if the second segment has a zero motion vector and the second segment is predicted using motion-

compensated prediction from the reference picture, the zero motion vector is assigned to the skip coding mode of the first segment and the prediction for the first segment is formed with respect to a corresponding segment of the reference frame associated with the zero motion vector.

58. (previously presented) An encoder according to claim 12, wherein if the second segment has a zero motion vector and the second segment is predicted using motion-compensated prediction from a second reference picture immediately preceding the picture second segment belongs to, the zero motion vector is assigned to the skip coding mode of the first segment and the prediction for the first segment is formed with respect to a corresponding segment of the reference frame associated with the zero motion vector.

59. (previously presented) A decoder according to claim 19, wherein if the second segment has a zero motion vector, the zero-motion vector is assigned to the skip coding mode for the first segment and the prediction for the first segment is formed with respect to a corresponding segment of the reference frame associated with the zero motion vector.

60. (previously presented) A decoder according to claim 19, wherein if the second segment has a non-zero motion vector,

the motion compensated prediction block further arranged to derive the predicted non-zero motion vector based at least in part on the motion vector of the second segment; and

the predicted non-zero motion vector is assigned for the skip coding mode for the first segment; and the prediction for the first segment is formed by a motion compensated prediction with respect to the reference frame based at least in part on the predicted non-zero motion vector.

61. (previously presented) A decoder according to claim 19, wherein the motion estimation block further arranged to:

perform an analysis of motion information of the second segment and motion information of a third segment neighboring the first segment;

determine whether a region surrounding the first segment has a global or a regional motion in a video sequence based at least in part on a characterictic of the motion vector of the second segment and the motion vector of the third segment.

62. (previously presented) A decoder according to claim 61, wherein if the region surrounding the first segment has a global or a regional motion in a video sequence,

the motion estimation block further arranged to derive the predicted non-zero motion vector based at least in part on the motion vector of the second segment and the motion vector of the third segment; and

the predicted non-zero motion vector is assigned for the skip coding mode for the first segment; and the prediction for the first segment is formed by a motion compensated prediction with respect to the reference frame based at least in part on the predicted non-zero motion vector.

63. (previously presented) A decoder according to claim 19, wherein the motion estimation block further arranged to derive the predicted non-zero motion vector based at least in part on the motion vector of the second segment.

64. (previously presented) A decoder according to claim 19, wherein the motion estimation block further arranged to derive the predicted non-zero motion vector based at least in part on the motion vector of the second segment and motion vector of a third segment neighboring the first segment.

65. (previously presented) A decoder according to claim 19, wherein no residual information is provided for the first segment in an encoded bitstream.

66. (previously presented) A decoder according to claim 19, wherein the motion estimation block further arranged to derive a predicted motion vector based at least in

part on the motion vector of the second segment and motion vector of a third segment neighboring the first segment; and

if any component of the predicted motion vector has an absolute value larger than a certain threshold value, the predicted motion vector is assigned for the skip coding mode of the first segment, and the prediction for the first segment is formed by a motion compensated prediction with respect to the reference frame based at least in part on the predicted motion vector; and

if none of components of the predicted motion vector has an absolute value larger than the certain threshold value, the zero motion vector is assigned for the skip coding mode of the first segment, and the prediction for the first segment is formed with respect to a corresponding segment of the reference frame associated with the zero motion vector.

67. (previously presented) A decoder according to claim 19, wherein if the second segment has a zero motion vector and the second segment is predicted using motion-compensated prediction from the reference picture, the zero motion vector is assigned to the skip coding mode of the first segment and the prediction for the first segment is formed with respect to a corresponding segment of the reference frame associated with the zero motion vector.

68. (previously presented) A decoder according to claim 19, wherein if the second segment has a zero motion vector and the second segment is predicted using motion-compensated prediction from a second reference picture immediately preceding the picture second segment belongs to, the zero motion vector is assigned to the skip coding mode of the first segment and the prediction for the first segment is formed with respect to a corresponding segment of the reference frame associated with the zero motion vector.

69. (previously presented) A decoder according to claim 19, wherein no further motion vector information for the first segment is retrieved from an encoded bitstream.

70. (previously presented) A method according to claim 8, wherein no further motion vector information for the first segment is retrieved from the encoded bitstream.

REMARKS

Applicant has amended claims 1, 8, 12 and 19 to change the wording of the claims such that:

the assigned motion vector is the assigned motion vector of the skip coding mode, and

the assigned motion vector is one of the zero motion vector and the predicted non-zero motion vector.

No new matter has been introduced.

Respectfully submitted,

Kenneth Q. Lao
Registration No. 40,061

Date: Sept 30, 2008

WARE, FRESSOLA, VAN DER SLUYS
& ADOLPHSON LLP
Bradford Green, Building 5
755 Main Street, PO Box 224
Monroe, CT 06468
(203) 261-1234

PTO/SB/06 (07-06)
Approved for use through 1/31/2007. OMB 0651-0032
U.S. Patent and Trademark Office; U.S. DEPARTMENT OF COMMERCE
Under the Paperwork Reduction Act of 1995, no persons are required to respond to a collection of information unless it displays a valid OMB control number.

PATENT APPLICATION FEE DETERMINATION RECORD

Substitute for Form PTO-875

Application or Docket Number	Filing Date	
10/390,549	03/14/2003	☒ To be Mailed

APPLICATION AS FILED – PART I

FOR	(Column 1) NUMBER FILED	(Column 2) NUMBER EXTRA	SMALL ENTITY ☐ RATE ($)	SMALL ENTITY FEE ($)	OR	OTHER THAN SMALL ENTITY RATE ($)	OTHER THAN SMALL ENTITY FEE ($)
☐ BASIC FEE (37 CFR 1.16(a), (b), or (c))	N/A	N/A	N/A			N/A	
☐ SEARCH FEE (37 CFR 1.16(k), (i), or (m))	N/A	N/A	N/A			N/A	
☐ EXAMINATION FEE (37 CFR 1.16(o), (p), or (q))	N/A	N/A	N/A			N/A	
TOTAL CLAIMS (37 CFR 1.16(i))	minus 20 =	*	X $ =		OR	X $ =	
INDEPENDENT CLAIMS (37 CFR 1.16(h))	minus 3 =	*	X $ =			X $ =	
☐ APPLICATION SIZE FEE (37 CFR 1.16(s))	If the specification and drawings exceed 100 sheets of paper, the application size fee due is $250 ($125 for small entity) for each additional 50 sheets or fraction thereof. See 35 U.S.C. 41(a)(1)(G) and 37 CFR 1.16(s).						
☐ MULTIPLE DEPENDENT CLAIM PRESENT (37 CFR 1.16(j))							
* If the difference in column 1 is less than zero, enter "0" in column 2.			TOTAL			TOTAL	

APPLICATION AS AMENDED – PART II

AMENDMENT 10/03/2008	(Column 1) CLAIMS REMAINING AFTER AMENDMENT		(Column 2) HIGHEST NUMBER PREVIOUSLY PAID FOR	(Column 3) PRESENT EXTRA	SMALL ENTITY RATE ($)	SMALL ENTITY ADDITIONAL FEE ($)	OR	OTHER THAN SMALL ENTITY RATE ($)	OTHER THAN SMALL ENTITY ADDITIONAL FEE ($)
Total (37 CFR 1.16(i))	* 66	Minus	** 77	= 0	X $ =		OR	X $52=	0
Independent (37 CFR 1.16(h))	* 4	Minus	***7	= 0	X $ =		OR	X $220=	0
☐ Application Size Fee (37 CFR 1.16(s))									
☐ FIRST PRESENTATION OF MULTIPLE DEPENDENT CLAIM (37 CFR 1.16(j))							OR		
					TOTAL ADD'L FEE		OR	TOTAL ADD'L FEE	0

AMENDMENT	(Column 1) CLAIMS REMAINING AFTER AMENDMENT		(Column 2) HIGHEST NUMBER PREVIOUSLY PAID FOR	(Column 3) PRESENT EXTRA	RATE ($)	ADDITIONAL FEE ($)	OR	RATE ($)	ADDITIONAL FEE ($)
Total (37 CFR 1.16(i))	*	Minus	**	=	X $ =		OR	X $ =	
Independent (37 CFR 1.16(h))	*	Minus	***	=	X $ =		OR	X $ =	
☐ Application Size Fee (37 CFR 1.16(s))									
☐ FIRST PRESENTATION OF MULTIPLE DEPENDENT CLAIM (37 CFR 1.16(j))							OR		
					TOTAL ADD'L FEE		OR	TOTAL ADD'L FEE	

* If the entry in column 1 is less than the entry in column 2, write "0" in column 3.
** If the "Highest Number Previously Paid For" IN THIS SPACE is less than 20, enter "20".
*** If the "Highest Number Previously Paid For" IN THIS SPACE is less than 3, enter "3".
The "Highest Number Previously Paid For" (Total or Independent) is the highest number found in the appropriate box in column 1.

Legal Instrument Examiner:
/GOIGA N. DUCKETT/

This collection of information is required by 37 CFR 1.16. The information is required to obtain or retain a benefit by the public which is to file (and by the USPTO to process) an application. Confidentiality is governed by 35 U.S.C. 122 and 37 CFR 1.14. This collection is estimated to take 12 minutes to complete, including gathering, preparing, and submitting the completed application form to the USPTO. Time will vary depending upon the individual case. Any comments on the amount of time you require to complete this form and/or suggestions for reducing this burden, should be sent to the Chief Information Officer, U.S. Patent and Trademark Office, U.S. Department of Commerce, P.O. Box 1450, Alexandria, VA 22313-1450. DO NOT SEND FEES OR COMPLETED FORMS TO THIS ADDRESS. **SEND TO: Commissioner for Patents, P.O. Box 1450, Alexandria, VA 22313-1450.**
If you need assistance in completing the form, call 1-800-PTO-9199 and select option 2.

UNITED STATES PATENT AND TRADEMARK OFFICE

UNITED STATES DEPARTMENT OF COMMERCE
United States Patent and Trademark Office
Address: COMMISSIONER FOR PATENTS
P.O. Box 1450
Alexandria, Virginia 22313-1450
www.uspto.gov

NOTICE OF ALLOWANCE AND FEE(S) DUE

4955 7590 01/09/2009

WARE FRESSOLA VAN DER SLUYS & ADOLPHSON, LLP
BRADFORD GREEN, BUILDING 5
755 MAIN STREET, P O BOX 224
MONROE, CT 06468

EXAMINER	
NGUYEN, HUY THANH	
ART UNIT	PAPER NUMBER
2621	

DATE MAILED: 01/09/2009

APPLICATION NO.	FILING DATE	FIRST NAMED INVENTOR	ATTORNEY DOCKET NO.	CONFIRMATION NO.
10/390,549	03/14/2003	Jani Lainema	944-001.105	3966

TITLE OF INVENTION: METHOD FOR CODING MOTION IN A VIDEO SEQUENCE

APPLN. TYPE	SMALL ENTITY	ISSUE FEE DUE	PUBLICATION FEE DUE	PREV. PAID ISSUE FEE	TOTAL FEE(S) DUE	DATE DUE
nonprovisional	NO	$1510	$300	$0	$1810	04/09/2009

THE APPLICATION IDENTIFIED ABOVE HAS BEEN EXAMINED AND IS ALLOWED FOR ISSUANCE AS A PATENT. PROSECUTION ON THE MERITS IS CLOSED. THIS NOTICE OF ALLOWANCE IS NOT A GRANT OF PATENT RIGHTS. THIS APPLICATION IS SUBJECT TO WITHDRAWAL FROM ISSUE AT THE INITIATIVE OF THE OFFICE OR UPON PETITION BY THE APPLICANT. SEE 37 CFR 1.313 AND MPEP 1308.

THE ISSUE FEE AND PUBLICATION FEE (IF REQUIRED) MUST BE PAID WITHIN THREE MONTHS FROM THE MAILING DATE OF THIS NOTICE OR THIS APPLICATION SHALL BE REGARDED AS ABANDONED. THIS STATUTORY PERIOD CANNOT BE EXTENDED. SEE 35 U.S.C. 151. THE ISSUE FEE DUE INDICATED ABOVE DOES NOT REFLECT A CREDIT FOR ANY PREVIOUSLY PAID ISSUE FEE IN THIS APPLICATION. IF AN ISSUE FEE HAS PREVIOUSLY BEEN PAID IN THIS APPLICATION (AS SHOWN ABOVE), THE RETURN OF PART B OF THIS FORM WILL BE CONSIDERED A REQUEST TO REAPPLY THE PREVIOUSLY PAID ISSUE FEE TOWARD THE ISSUE FEE NOW DUE.

HOW TO REPLY TO THIS NOTICE:

I. Review the SMALL ENTITY status shown above.

If the SMALL ENTITY is shown as YES, verify your current SMALL ENTITY status:

A. If the status is the same, pay the TOTAL FEE(S) DUE shown above.

B. If the status above is to be removed, check box 5b on Part B - Fee(s) Transmittal and pay the PUBLICATION FEE (if required) and twice the amount of the ISSUE FEE shown above, or

If the SMALL ENTITY is shown as NO:

A. Pay TOTAL FEE(S) DUE shown above, or

B. If applicant claimed SMALL ENTITY status before, or is now claiming SMALL ENTITY status, check box 5a on Part B - Fee(s) Transmittal and pay the PUBLICATION FEE (if required) and 1/2 the ISSUE FEE shown above.

II. PART B - FEE(S) TRANSMITTAL, or its equivalent, must be completed and returned to the United States Patent and Trademark Office (USPTO) with your ISSUE FEE and PUBLICATION FEE (if required). If you are charging the fee(s) to your deposit account, section "4b" of Part B - Fee(s) Transmittal should be completed and an extra copy of the form should be submitted. If an equivalent of Part B is filed, a request to reapply a previously paid issue fee must be clearly made, and delays in processing may occur due to the difficulty in recognizing the paper as an equivalent of Part B.

III. All communications regarding this application must give the application number. Please direct all communications prior to issuance to Mail Stop ISSUE FEE unless advised to the contrary.

IMPORTANT REMINDER: Utility patents issuing on applications filed on or after Dec. 12, 1980 may require payment of maintenance fees. It is patentee's responsibility to ensure timely payment of maintenance fees when due.

PTOL-85 (Rev. 08/07) Approved for use through 08/31/2010.

PART B - FEE(S) TRANSMITTAL

Complete and send this form, together with applicable fee(s), to: Mail **Mail Stop ISSUE FEE**
Commissioner for Patents
P.O. Box 1450
Alexandria, Virginia 22313-1450
or Fax (571)-273-2885

INSTRUCTIONS: This form should be used for transmitting the ISSUE FEE and PUBLICATION FEE (if required). Blocks 1 through 5 should be completed where appropriate. All further correspondence including the Patent, advance orders and notification of maintenance fees will be mailed to the current correspondence address as indicated unless corrected below or directed otherwise in Block 1, by (a) specifying a new correspondence address; and/or (b) indicating a separate "FEE ADDRESS" for maintenance fee notifications.

CURRENT CORRESPONDENCE ADDRESS (Note: Use Block 1 for any change of address)

4955 7590 01/09/2009

WARE FRESSOLA VAN DER SLUYS & ADOLPHSON, LLP
BRADFORD GREEN, BUILDING 5
755 MAIN STREET, P O BOX 224
MONROE, CT 06468

Note: A certificate of mailing can only be used for domestic mailings of the Fee(s) Transmittal. This certificate cannot be used for any other accompanying papers. Each additional paper, such as an assignment or formal drawing, must have its own certificate of mailing or transmission.

Certificate of Mailing or Transmission

I hereby certify that this Fee(s) Transmittal is being deposited with the United States Postal Service with sufficient postage for first class mail in an envelope addressed to the Mail Stop ISSUE FEE address above, or being facsimile transmitted to the USPTO (571) 273-2885, on the date indicated below.

(Depositor's name)

(Signature)

(Date)

APPLICATION NO.	FILING DATE	FIRST NAMED INVENTOR	ATTORNEY DOCKET NO.	CONFIRMATION NO.
10/390,549	03/14/2003	Jani Lainema	944-001.105	3966

TITLE OF INVENTION: METHOD FOR CODING MOTION IN A VIDEO SEQUENCE

APPLN. TYPE	SMALL ENTITY	ISSUE FEE DUE	PUBLICATION FEE DUE	PREV. PAID ISSUE FEE	TOTAL FEE(S) DUE	DATE DUE
nonprovisional	NO	$1510	$300	$0	$1810	04/09/2009

EXAMINER	ART UNIT	CLASS-SUBCLASS
NGUYEN, HUY THANH	2621	386-111000

1. Change of correspondence address or indication of "Fee Address" (37 CFR 1.363).

❑ Change of correspondence address (or Change of Correspondence Address form PTO/SB/122) attached.

❑ "Fee Address" indication (or "Fee Address" Indication form PTO/SB/47; Rev 03-02 or more recent) attached. **Use of a Customer Number is required.**

2. For printing on the patent front page, list

(1) the names of up to 3 registered patent attorneys or agents OR, alternatively,

(2) the name of a single firm (having as a member a registered attorney or agent) and the names of up to 2 registered patent attorneys or agents. If no name is listed, no name will be printed.

1_____

2_____

3_____

3. ASSIGNEE NAME AND RESIDENCE DATA TO BE PRINTED ON THE PATENT (print or type)

PLEASE NOTE: Unless an assignee is identified below, no assignee data will appear on the patent. If an assignee is identified below, the document has been filed for recordation as set forth in 37 CFR 3.11. Completion of this form is NOT a substitute for filing an assignment.

(A) NAME OF ASSIGNEE (B) RESIDENCE: (CITY and STATE OR COUNTRY)

Please check the appropriate assignee category or categories (will not be printed on the patent) : ❑ Individual ❑ Corporation or other private group entity ❑ Government

4a. The following fee(s) are submitted:

❑ Issue Fee

❑ Publication Fee (No small entity discount permitted)

❑ Advance Order - # of Copies _____

4b. Payment of Fee(s): **(Please first reapply any previously paid issue fee shown above)**

❑ A check is enclosed.

❑ Payment by credit card. Form PTO-2038 is attached.

❑ The Director is hereby authorized to charge the required fee(s), any deficiency, or credit any overpayment, to Deposit Account Number _____ (enclose an extra copy of this form).

5. **Change in Entity Status** (from status indicated above)

❑ a. Applicant claims SMALL ENTITY status. See 37 CFR 1.27.

❑ b. Applicant is no longer claiming SMALL ENTITY status. See 37 CFR 1.27(g)(2).

NOTE: The Issue Fee and Publication Fee (if required) will not be accepted from anyone other than the applicant; a registered attorney or agent; or the assignee or other party in interest as shown by the records of the United States Patent and Trademark Office.

Authorized Signature _____ Date _____

Typed or printed name _____ Registration No. _____

This collection of information is required by 37 CFR 1.311. The information is required to obtain or retain a benefit by the public which is to file (and by the USPTO to process) an application. Confidentiality is governed by 35 U.S.C. 122 and 37 CFR 1.14. This collection is estimated to take 12 minutes to complete, including gathering, preparing, and submitting the completed application form to the USPTO. Time will vary depending upon the individual case. Any comments on the amount of time you require to complete this form and/or suggestions for reducing this burden, should be sent to the Chief Information Officer, U.S. Patent and Trademark Office, U.S. Department of Commerce, P.O. Box 1450, Alexandria, Virginia 22313-1450. DO NOT SEND FEES OR COMPLETED FORMS TO THIS ADDRESS. SEND TO: Commissioner for Patents, P.O. Box 1450, Alexandria, Virginia 22313-1450.

Under the Paperwork Reduction Act of 1995, no persons are required to respond to a collection of information unless it displays a valid OMB control number.

UNITED STATES PATENT AND TRADEMARK OFFICE

UNITED STATES DEPARTMENT OF COMMERCE
United States Patent and Trademark Office
Address: COMMISSIONER FOR PATENTS
P.O. Box 1450
Alexandria, Virginia 22313-1450
www.uspto.gov

APPLICATION NO.	FILING DATE	FIRST NAMED INVENTOR	ATTORNEY DOCKET NO.	CONFIRMATION NO.
10/390,549	03/14/2003	Jani Lainema	944-001.105	3966

4955 7590 01/09/2009

WARE FRESSOLA VAN DER SLUYS & ADOLPHSON, LLP
BRADFORD GREEN, BUILDING 5
755 MAIN STREET, P O BOX 224
MONROE, CT 06468

EXAMINER
NGUYEN, HUY THANH

ART UNIT	PAPER NUMBER
2621	

DATE MAILED: 01/09/2009

Determination of Patent Term Adjustment under 35 U.S.C. 154 (b)
(application filed on or after May 29, 2000)

The Patent Term Adjustment to date is 1078 day(s). If the issue fee is paid on the date that is three months after the mailing date of this notice and the patent issues on the Tuesday before the date that is 28 weeks (six and a half months) after the mailing date of this notice, the Patent Term Adjustment will be 1078 day(s).

If a Continued Prosecution Application (CPA) was filed in the above-identified application, the filing date that determines Patent Term Adjustment is the filing date of the most recent CPA.

Applicant will be able to obtain more detailed information by accessing the Patent Application Information Retrieval (PAIR) WEB site (http://pair.uspto.gov).

Any questions regarding the Patent Term Extension or Adjustment determination should be directed to the Office of Patent Legal Administration at (571)-272-7702. Questions relating to issue and publication fee payments should be directed to the Customer Service Center of the Office of Patent Publication at 1-(888)-786-0101 or (571)-272-4200.

PTOL-85 (Rev. 08/07) Approved for use through 08/31/2010.

Notice of Allowability	Application No.	Applicant(s)	
	10/390,549	LAINEMA, JANI	
	Examiner	Art Unit	
	HUY T. NGUYEN	2621	

-- The MAILING DATE of this communication appears on the cover sheet with the correspondence address--

All claims being allowable, PROSECUTION ON THE MERITS IS (OR REMAINS) CLOSED in this application. If not included herewith (or previously mailed), a Notice of Allowance (PTOL-85) or other appropriate communication will be mailed in due course. **THIS NOTICE OF ALLOWABILITY IS NOT A GRANT OF PATENT RIGHTS.** This application is subject to withdrawal from issue at the initiative of the Office or upon petition by the applicant. See 37 CFR 1.313 and MPEP 1308.

1. ☒ This communication is responsive to *03 October 2008*.

2. ☒ The allowed claim(s) is/are *1,3-8,10-12,14-19,21-26 and 28-70 being renumbered as 1-65*.

3. ☐ Acknowledgment is made of a claim for foreign priority under 35 U.S.C. § 119(a)-(d) or (f).
   a) ☐ All b) ☐ Some* c) ☐ None of the:
      1. ☐ Certified copies of the priority documents have been received.
      2. ☐ Certified copies of the priority documents have been received in Application No. _____ .
      3. ☐ Copies of the certified copies of the priority documents have been received in this national stage application from the International Bureau (PCT Rule 17.2(a)).

   * Certified copies not received: _____.

Applicant has THREE MONTHS FROM THE "MAILING DATE" of this communication to file a reply complying with the requirements noted below. Failure to timely comply will result in ABANDONMENT of this application.
THIS THREE-MONTH PERIOD IS NOT EXTENDABLE.

4. ☐ A SUBSTITUTE OATH OR DECLARATION must be submitted. Note the attached EXAMINER'S AMENDMENT or NOTICE OF INFORMAL PATENT APPLICATION (PTO-152) which gives reason(s) why the oath or declaration is deficient.

5. ☐ CORRECTED DRAWINGS (as "replacement sheets") must be submitted.
   (a) ☐ including changes required by the Notice of Draftsperson's Patent Drawing Review (PTO-948) attached
      1) ☐ hereto or 2) ☐ to Paper No./Mail Date _____.
   (b) ☐ including changes required by the attached Examiner's Amendment / Comment or in the Office action of Paper No./Mail Date _____.

   Identifying indicia such as the application number (see 37 CFR 1.84(c)) should be written on the drawings in the front (not the back) of each sheet. Replacement sheet(s) should be labeled as such in the header according to 37 CFR 1.121(d).

6. ☐ DEPOSIT OF and/or INFORMATION about the deposit of BIOLOGICAL MATERIAL must be submitted. Note the attached Examiner's comment regarding REQUIREMENT FOR THE DEPOSIT OF BIOLOGICAL MATERIAL.

Attachment(s)

1. ☐ Notice of References Cited (PTO-892)
2. ☐ Notice of Draftperson's Patent Drawing Review (PTO-948)
3. ☐ Information Disclosure Statements (PTO/SB/08), Paper No./Mail Date _____
4. ☐ Examiner's Comment Regarding Requirement for Deposit of Biological Material
5. ☐ Notice of Informal Patent Application
6. ☐ Interview Summary (PTO-413), Paper No./Mail Date _____ .
7. ☐ Examiner's Amendment/Comment
8. ☐ Examiner's Statement of Reasons for Allowance
9. ☐ Other _____.

/HUY T NGUYEN/
Primary Examiner, Art Unit 2621

Index of Claims	Application/Control No.	Applicant(s)/Patent Under Reexamination
	10390549	LAINEMA, JANI
	Examiner	**Art Unit**
	HUY T NGUYEN	2621

✓	Rejected	-	Cancelled	N	Non-Elected	A	Appeal
=	Allowed	÷	Restricted	I	Interference	O	Objected

☐ Claims renumbered in the same order as presented by applicant ☐ CPA ☐ T.D. ☐ R.1.47

CLAIM		DATE								
Final	Original	06/23/2008	01/02/2009							
	1	=	=							
	2	-	-							
	3	=	=							
	4	=	=							
	5	=	=							
	6	=	=							
	7	=	=							
	8	=	=							
	9	-	-							
	10	=	=							
	11	=	=							
	12	=	=							
	13	-	-							
	14	=	=							
	15	=	=							
	16	=	=							
	17	=	=							
	18	=	=							
	19	=	=							
	20	-	-							
	21	=	=							
	22	=	=							
	23	=	=							
	24	=	=							
	25	=	=							
	26	=	=							
	27	-	-							
	28	=	=							
	29	=	=							
	30	=	=							
	31	=	=							
	32	=	=							
	33	=	=							
	34	=	=							
	35	=	=							
	36	=	=							

Index of Claims	Application/Control No.	Applicant(s)/Patent Under Reexamination
	10390549	LAINEMA, JANI
	Examiner	**Art Unit**
	HUY T NGUYEN	2621

✓	Rejected	-	Cancelled	N	Non-Elected	A	Appeal
=	Allowed	÷	Restricted	I	Interference	O	Objected

☐ Claims renumbered in the same order as presented by applicant ☐ CPA ☐ T.D. ☐ R.1.47

CLAIM		DATE								
Final	Original	06/23/2008	01/02/2009							
	37	=	=							
	38	=	=							
	39	=	=							
	40	=	=							
	41	=	=							
	42	=	=							
	43	=	=							
	44	=	=							
	45	=	=							
	46	=	=							
	47	=	=							
	48	=	=							
	49	=	=							
	50	=	=							
	51	=	=							
	52	=	=							
	53	=	=							
	54	=	=							
	55	=	=							
	56	=	=							
	57	=	=							
	58	=	=							
	59	=	=							
	60	=	=							
	61	=	=							
	62	=	=							
	63	=	=							
	64	=	=							
	65	=	=							
	66	=	=							
	67	=	=							
	68	=	=							
	69	=	=							
	70	=	=							

Issue Classification	Application/Control No.	Applicant(s)/Patent Under Reexamination
	10390549	LAINEMA, JANI
	Examiner	**Art Unit**
	HUY T NGUYEN	2621

ORIGINAL		INTERNATIONAL CLASSIFICATION										
CLASS	SUBCLASS	CLAIMED					NON-CLAIMED					
386	111	H	0	4	N	5 / 91 (2006.01.01)						

CROSS REFERENCE(S)

CLASS	SUBCLASS (ONE SUBCLASS PER BLOCK)				
386	112				

☐ Claims renumbered in the same order as presented by applicant ☐ CPA ☐ T.D. ☐ R.1.47

Final	Original	Final	Original	Final	Original	Final	Original	Final	Original	Final	Original	Final	Original	Final	Original
1	1	17	21	33	38	49	54	65	70						
2	3	18	22	34	39	50	55								
3	4	19	23	35	40	51	56								
4	5	20	24	36	41	52	57								
5	6	21	25	37	42	53	58								
6	7	22	26	38	43	54	59								
7	8	23	28	39	44	55	60								
8	10	24	29	40	45	56	61								
9	11	25	30	41	46	57	62								
10	12	26	31	42	47	58	63								
11	14	27	32	43	48	59	64								
12	15	28	33	44	49	60	65								
13	16	29	34	45	50	61	66								
14	17	30	35	46	51	62	67								
15	18	31	36	47	52	63	68								
16	19	32	37	48	53	64	69								

NONE (Assistant Examiner)	(Date)	**Total Claims Allowed:** 65	
/HUY T NGUYEN/ Primary Examiner.Art Unit 2621 (Primary Examiner)	01/02/2009 (Date)	O.G. Print Claim(s) 1	O.G. Print Figure 8

UNITED STATES PATENT AND TRADEMARK OFFICE

UNITED STATES DEPARTMENT OF COMMERCE
United States Patent and Trademark Office
Address: COMMISSIONER FOR PATENTS
P.O. Box 1450
Alexandria, Virginia 22313-1450
www.uspto.gov

BIB DATA SHEET

CONFIRMATION NO. 3966

SERIAL NUMBER	FILING or 371(c) DATE	CLASS	GROUP ART UNIT	ATTORNEY DOCKET NO.
10/390,549	03/14/2003 RULE	348	2621	944-001.105

APPLICANTS
Jani Lainema, Irving, TX;

**** CONTINUING DATA ***************************
This appln claims benefit of 60/365,072 03/15/2002

**** FOREIGN APPLICATIONS ***************************

**** IF REQUIRED, FOREIGN FILING LICENSE GRANTED ****
05/16/2003

Foreign Priority claimed	35 USC 119(a-d) conditions met	Verified and Acknowledged	Examiner's Signature	Met after Allowance	Initials	STATE OR COUNTRY	SHEETS DRAWINGS	TOTAL CLAIMS	INDEPENDENT CLAIMS
☐ Yes ☑ No	☐ Yes ☑ No		/HUY THANH NGUYEN/	☐		TX	10	27	7

ADDRESS

WARE FRESSOLA VAN DER SLUYS & ADOLPHSON, LLP
BRADFORD GREEN, BUILDING 5
755 MAIN STREET, P O BOX 224
MONROE, CT 06468
UNITED STATES

TITLE

Method for coding motion in a video sequence

FILING FEE RECEIVED		
3242	FEES: Authority has been given in Paper No._____ to charge/credit DEPOSIT ACCOUNT No._____ for following:	☐ All Fees ☐ 1.16 Fees (Filing) ☐ 1.17 Fees (Processing Ext. of time) ☐ 1.18 Fees (Issue) ☐ Other _____ ☐ Credit

BIB (Rev. 05/07).

EAST Search History

Ref #	Hits	Search Query	DBs	Default Operator	Plurals	Time Stamp
L1	1	(((skip$4 near3 (cod$4 or encod$4) near3 mode $1) with (indicat$4 or identif$5)) same ((zero adj2 motion adj2 vector) or (predict$4 adj2 motion)) same assign $4) and (lainema near3 jani)	US-PGPUB; USPAT; USOCR; FPRS; EPO; JPO; DERWENT; IBM_TDB	SAME	ON	2008/12/28 15:11
L2	2	((skip$4 near3 (cod$4 or encod$4) near3 mode $1) with (indicat$4 or identif$5)) same ((zero adj2 motion adj2 vector) or (predict$4 adj2 motion)) same (identif $4 or indicat $4) same frame$1	US-PGPUB; USPAT; USOCR; FPRS; EPO; JPO; DERWENT; IBM_TDB	SAME	ON	2008/12/28 15:12

L3	0	((skip$4 with (cod$4 or encod$4) with mode$1 with fram$1) and (indicat $4 or identif $5 or tag$4) and (zero adj2 motion adj2 vector) and (predict $4 adj2 motion)). CLM.	US-PGPUB; USPAT; USOCR; FPRS; EPO; JPO; DERWENT; IBM_TDB	SAME	ON	2008/12/28 15:13

12/28/08 3:13:36 PM

Search Notes	Application/Control No.	Applicant(s)/Patent Under Reexamination
	10390549	LAINEMA, JANI
	Examiner	**Art Unit**
	HUY T NGUYEN	2621

SEARCHED

Class	Subclass	Date	Examiner

SEARCH NOTES

Search Notes	Date	Examiner
EAST SEARCH	6/23/2008	HN
EAST INTERFERENCE SEARCH. SEE PRINTOUT	12/28/2008	HN

INTERFERENCE SEARCH

Class	Subclass	Date	Examiner
INTERFERENCE SEARCH		12/28/2008	HN

OIPE IAP40
FEB 2 7 2009
PATENT & TRADEMARK OFFICE

1Fw 2614

WARE, FRESSOLA, VAN DER SLUYS & ADOLPHSON LLP
PATENT, TRADEMARK, COPYRIGHT AND COMPUTER LAW COUNSEL
BRADFORD GREEN, BUILDING FIVE
755 MAIN STREET
P. O. BOX 224
MONROE, CONNECTICUT 06468
TELEPHONE: (203) 261-1234
FACSIMILE: (203) 261-5676
E MAIL: mail@wfva.net

ALFRED A. FRESSOLA
K. BRADFORD ADOLPHSON
FRANCIS J. MAGUIRE, JR.
WILLIAM J. BARBER
JAMES R. FREDERICK
JACK M. PASQUALE
ANDREW T. HYMAN
KEITH R. OBERT

OF COUNSEL: ROBERT H. WARE
PETER C. VAN DER SLUYS
(1939-1991)

KENNETH Q. LAO, Ph.D.
PATENT AGENT
ANATOLY FRENKEL, Ph.D.
PATENT AGENT
SHIMING WU, Ph.D.
PATENT AGENT
CATHY A. STURMER
PATENT AGENT

February 25, 2009

United States Patent and Trademark Office
Commissioner for Patents
P. O. Box 1450
Alexandria, VA 22313-1450

Re: Application No. 944-001.105
Examiner: Huy Thanh Nguyen
Inventor: Jani Lainema
Our Ref: 944-001.105

Dear Sirs,

In response to your telephone call regarding the declaration on the above-referenced matter, please find attached documentation showing that the documents were sent to the USPTO on June 10, 2003 and received by your office on June 12, 2003.

If you need anything further please don't hesitate to contact us.

Very truly yours,

Ken Lao

Kenneth Q. Lao

KQL/mef
Enc.

OIPE IAP40 FEB 27 2009 PATENT & TRADEMARK OFFICE

Practitioner's Docket No. 944-001.105 **PATENT**

IN THE UNITED STATES PATENT AND TRADEMARK OFFICE

In re application of: Jani Lainema

Application No.: 10/390,549 Group No.: 2614
Filed: March 14, 2003 Examiner: to be assigned
For: METHOD FOR CODING MOTION IN A VIDEO SEQUENCE

Mail Stop Missing Parts
Commissioner for Patents
P.O. Box 1450
Alexandria, VA 22313-1450

COMPLETION OF FILING REQUIREMENTS
- NONPROVISIONAL APPLICATION

(check and complete this item, if applicable)

I. ☒ This replies to the Notice to File Missing Parts of Application (PTO-1533) mailed May 16, 2003.

NOTE: If these papers are filed before the office letter issues, adequate identification of the original papers should be made, e.g., in addition to the name of the inventor and title of invention, the filing date based on the "Express Mail" procedure, the serial number from the return post card or the attorney's docket number added.

☒ A copy of the Notice to File Missing Parts of Application – Filing Date Granted (Form PTO-1533) is enclosed.

NOTE: The PTO requires that a copy of Form PTO-1533 be returned with the response to the notice to file missing parts to the application.

CERTIFICATE OF MAILING/TRANSMISSION (37 C.F.R. § 1.8(a))

I hereby certify that this correspondence is, on the date shown below, being:

MAILING

☒ deposited with the United States Postal Service with sufficient postage as first class Mail in an envelope addressed to the Mail Stop Missing Parts, Commissioner for Patents, Alexandria, VA 22313-1450.

FACSIMILE

☐ transmitted by facsimile to the Patent and Trademark Office.

Signature

Date: 6.10.03

Cathy Wilcox
(type or print name of person certifying)

DECLARATION OR OATH

II. ☒ No declaration or oath was filed. Enclosed is the original declaration or oath for this application.

NOTE: If the correct inventor or inventors are not named on filing a nonprovisional application under § 1.53(b) without an executed oath or declaration under § 1.63, the later submission of an executed oath or declaration under § 1.63 during the pendency of the application will act to correct the earlier identification of inventorship. 37 C.F.R. § 1.48(f)(1).

OR

☐ The declaration or oath that was filed was determined to be defective. A new original oath or declaration is attached.

NOTE: For surcharge fee for filing declaration after filing date complete item VI(3) below.

NOTE: "The following combinations of information supplied in an oath or declaration filed after the filing date are acceptable as minimums for identifying a specification and compliance with any one of the items below will be accepted as complying with the identification requirement of 37 C.F.R. § 1.63:

"(A) application number (consisting of the series code and the serial number, e.g., 08/123,456;

"(B) serial number and filing date;

"(C) attorney docket number which was on the specification as filed;

"(D) title which was on the specification as filed and reference to an attached specification which is both attached to the oath or declaration at the time of execution and submitted with the oath or declaration; or

"(E) title which was on the specification as filed and accompanied by a cover letter accurately identifying the application for which it was intended by either the application number (consisting of the series code and the serial number, e.g., 08/123,456), or serial number and filing date. Absent any statement(s) to the contrary, it will be presumed that the application filed in the PTO is the application which the inventor(s) executed by signing the oath or declaration."

M.P.E.P. § 601.01(a) 7th Ed.

NOTE: Another minimum found acceptable in the declaration is the filing date (i.e., date of express mail) and the express mail number, useful where the serial number is not yet known. But note the practice where the express mail deposit is a Saturday, Sunday or holiday within the District of Columbia. 37 C.F.R. § 1.10(c).

(complete (c) or (d), if applicable)

Attached is a

(c) ☐ Statement by a registered attorney that the application filed in the PTO is the application that the inventor executed by signing the declaration.

(d) ☐ Statement that the "attached" specification is a copy of the specification and any amendments thereto that were filed in the PTO to obtain the filing date.

AMENDMENT CANCELLING CLAIMS

III. ☐ Cancel claims _____ inclusive.

TRANSMITTAL OF ENGLISH TRANSLATION OF NON-ENGLISH LANGUAGE PAPERS

IV. ☐ Submitted herewith is an English translation of the non-English language application papers as originally filed. Also submitted herewith is a statement by the translator of the accuracy of the translation. It is requested that this translation be used as the copy for examination purposes in the PTO.

NOTE: For fee processing a non-English application, complete item VI(5) below.

NOTE: a non-English oath or declaration in the form provided by the PTO need not be translated. 37 C.F.R. § 1.69(b).

SMALL ENTITY STATUS

V. ☐ A statement that this filing is by a small entity

(check and complete applicable items)

☐ is attached.

☐ A separate refund request accompanies this paper.

☐ was filed on _____ (original).

COMPLETION FEES

VI.

WARNING: *Failure to submit the surcharge fees where required will cause the application to become abandoned. 37 C.F.R. § 1.53.*

NOTE: For effect on fees of failure to establish status, or change status, as a small entity, see 37 C.F.R. § 1.28(a).

1. Filing fee

☒ original patent application
(37 C.F.R. § 1.16(a) - $740.00; small entity - $370.00) $ 750.00

☐ design application
(37 C.F.R. § 1.16(f) - $330.00; small entity - $165.00) $_____

$_____

2. Fees for claims

☒ each independent claim in excess of 3
(37 C.F.R. § 1.16(b) - $84.00; small entity - $42.00) $ 336.00

☒ each claim in excess of 20
(37 C.F.R. § 1.16(c) - $18.00; small entity - $9.00) $ 126.00

☐ multiple dependent claim(s)
(37 C.F.R. § 1.16(d) - $280.00; small entity - $140.00) $_____

3. Surcharge Fees

☒ late payment of filing fee and/or late filing of original declaration or oath (37 C.F.R. § 1.16(e) - $130.00); $ 130.00

NOTE: Even where a facsimile declaration or oath signed by the inventor(s) was part of the originally filed papers, the surcharge fee is required.

NOTE: If both the filing fee and declaration or oath were missing from the original papers, the Office practice under § C.F.R. § 1.16(e) is that only one surcharge Fee need be paid whether the later filed oath or declaration and/or the filing fee are submitted afterwards at the same time or at different times.

4. ☐ Petition and fee for filing by other than all the inventors or a person not the inventor (37 C.F.R. §§ 1.17(i) and 1.47 - $130.00) $_____

☐ Fee for processing an application filed with a specification in a non-English language (37 C.F.R. §§ 1.17(k) and 1.52(d) - $130.00) $_____

☐ Fee for processing and retention of application (37 C.F.R. §§ 1.21(l) and 1.53(d) - $130.00) $_____

☒ Assignment (See "ASSIGNMENT COVER SHEET".) $ 40.00

NOTE: 37 C.F.R. § 1.21(l) establishes a fee for processing and retaining any application which is abandoned for failing to complete the application pursuant to 37 C.F.R. § 1.53(f) and this, as well as the changes to 37 C.F.R. §§ 1.53 and 1.78, indicate that in order to obtain the benefit of a prior U.S. application, either the basic filing fee or the processing and retention fee of § 1.21(l) within 1 year of notification under § 1.53(f) must be paid.

Total completion fees $ 1382.00

VII. EXTENSION OF TIME

(complete (a) or (b), as applicable)

The proceedings herein are for a patent application, and the provisions of 37 C.F.R. § 1.136(a) apply.

(a) ☐ Applicant petitions for an extension of time, the fees for which are set out in 37 C.F.R. § 1.17(a)(1)-(4), for the total number of months checked below:

Extension (months)	Fee for other than small entity	Fee for small entity
☐ one month	$ 110.00	$ 55.00
☐ two months	$ 400.00	$ 200.00
☐ three months	$ 920.00	$ 460.00
☐ four months	$1,440.00	$ 720.00

Fee: $_____

If an additional extension of time is required, please consider this a petition therefor.

(check and complete the next item, if applicable)

☐ An extension for ____ months has already been secured, and the fee paid therefor of $_____ is deducted from the total fee due for the total months of extension now requested.

Extension fee due with this request $_____

or

(b) ☒ Applicant believes that no extension of term is required. However, this condi-tional petition is being made to provide for the possibility that applicant has inadvertently overlooked the need for a petition and fee for extension of time.

TOTAL FEE DUE

VIII.

The total fee due is

Completion fee(s) $ 1382.00

Extension fee (if any) $ _____

Total Fee Due $ 1382.00

PAYMENT OF FEES

IX.

☒ Enclosed is a check in the amount of $ 1382.00

☐ Charge Account No. _____ in the amount of $ _____.
A duplicate of this request is attached.

NOTE: Fees should be itemized in such a manner that it is clear for which purpose the fees are paid. 37 C.F.R. § 1.22(b).

Please charge Account No. _____ for any fees that may be due by this paper.

AUTHORIZATION TO CHARGE ADDITIONAL FEES

X.

WARNING: *Accurately count claims, especially multiple dependant claims, to avoid unexpected high charges if extra claims are authorized.*

NOTE: "Amounts of twenty-five dollars or less will not be returned unless specifically requested within a reasonable time, nor will the payer be notified of such amounts; amounts over twenty-five dollars may be returned by check or, if requested, by credit to a deposit account." 37 C.F.R. § 1.26(a).

☒ The Commissioner is hereby authorized to charge the following additional fees that may be required by this paper and during the pendency of this application to Account No. 23-0442.

☐ 37 C.F.R. § 1.16(a), (f) or (g) (filing fees)

☐ 37 C.F.R. § 1.16(b), (c) and (d) (presentation of extra claims)

NOTE: Because additional fees for excess or multiple dependent claims not paid on filing or on later presentation must only be paid or these claims cancelled by amendment prior to the expiration of the time period set for response by the PTO in any notice of fee deficiency (37 C.F.R. § 1.16(d)), it might be best not to authorize the PTO to charge additional claim fees, except possibly when dealing with amendments after final action.

☐ 37 C.F.R. § 1.16(e) (surcharge for filing the basic filing fee and/or declaration on a date later than the filing date of the application)

☐ 37 C.F.R. § 1.17(a)(1)-(5) (extension fees pursuant to § 1.136(a))

☐ 37 C.F.R. § 1.17 (application processing fees)

NOTE: *"A written request may be submitted in an application that is an authorization to treat any concurrent or future reply, requiring a petition for an extension of time under this paragraph for its timely submission, as incorporating a petition for extension of time for the appropriate length of time. An authorization to charge all required fees, fees under § 1.17, or all required extension of time fees will be treated as a constructive petition for an extension of time in any concurrent or future reply requiring a petition for an extension of time under this paragraph for its timely submission. Submission of the fee set forth in § 1.17(a) will also be treated as a constructive petition for an extension of time in any concurrent reply requiring a petition for an extension of time under this paragraph for its timely submission." 37 C.F.R. § 1.136(a)(3).*

☐ 37 C.F.R. § 1.18 (issue fee at or before mailing of Notice of Allowance, pursuant to 37 C.F.R. § 1.311(b))

NOTE: *Where an authorization to charge the issue fee to a deposit account has been filed before the mailing of a Notice of Allowance, the issue fee will be automatically charged to the deposit account at the time of mailing the notice of allowance. 37 C.F.R. § 1.311(b).*

NOTE: *37 C.F.R. § 1.28(b) requires "Notification of any change in loss of entitlement to small entity status must be filed in the application...prior to paying, or at the time of paying...issue fee..." From the wording of 37 C.F.R. § 1.28(b): (a) notification of change of status must be made even if the fee is paid as "other than a small entity" and (b) no notification is required if the change is to another small entity.*

SIGNATURE OF PRACTITIONER

Reg. No. 40,061

Kenneth Q. Lao
(type or print name of practitioner)

Tel. No.: (203) 261-1234

WARE, FRESSOLA, VAN DER SLUYS & ADOLPHSON LLP
Bradford Green, Bldg. Five
755 Main St., P.O. Box 224
Monroe, CT 06468

Customer No. 04955

OIPE IAP40 FEB 27 2009 PATENT & TRADEMARK OFFICE

UNITED STATES PATENT AND TRADEMARK OFFICE

UNITED STATES DEPARTMENT OF COMMERCE
United States Patent and Trademark Office
Address: COMMISSIONER OF PATENTS AND TRADEMARKS
P.O. Box 1450
Alexandria, Virginia 22313-1450
www.uspto.gov

APPLICATION NUMBER	FILING/RECEIPT DATE	FIRST NAMED APPLICANT	ATTORNEY DOCKET NUMBER
10/390,549	03/14/2003	Jani Lainema	944-001.105

CONFIRMATION NO. 3966

FORMALITIES LETTER

OC000000010055013

004955
WARE FRESSOLA VAN DER SLUYS &
ADOLPHSON, LLP
BRADFORD GREEN BUILDING 5
755 MAIN STREET, P O BOX 224
MONROE, CT 06468

Date Mailed: 05/16/2003

NOTICE TO FILE MISSING PARTS OF NONPROVISIONAL APPLICATION

FILED UNDER 37 CFR 1.53(b)

Filing Date Granted

Items Required To Avoid Abandonment:

An application number and filing date have been accorded to this application. The item(s) indicated below, however, are missing. Applicant is given **TWO MONTHS** from the date of this Notice within which to file all required items and pay any fees required below to avoid abandonment. Extensions of time may be obtained by filing a petition accompanied by the extension fee under the provisions of 37 CFR 1.136(a).

- The statutory basic filing fee is missing.
  Applicant must submit $ **750** *to complete the basic filing fee for a non-small entity. If appropriate, applicant may make a written assertion of entitlement to small entity status and pay the small entity filing fee (37 CFR 1.27).*
- The oath or declaration is missing.
  A properly signed oath or declaration in compliance with 37 CFR 1.63, identifying the application by the above Application Number and Filing Date, is required.
- To avoid abandonment, a late filing fee or oath or declaration surcharge as set forth in 37 CFR 1.16(e) of $130 for a non-small entity, must be submitted with the missing items identified in this letter.

Items Required To Avoid Processing Delays:

The item(s) indicated below are also required and should be submitted with any reply to this notice to avoid further processing delays.

- Additional claim fees of **$462** as a non-small entity, including any required multiple dependent claim fee, are required. Applicant must submit the additional claim fees or cancel the additional claims for which fees are due.

SUMMARY OF FEES DUE:

Total additional fee(s) required for this application is **$1342** for a Large Entity

Applicant Lainema

For: METHOD FOR CODING MOTION IN A VIDEO SEQUENCE

Serial No. 10/390,549 Filed: March 14, 2003

The following papers were received in the U.S. Patent and Trademark Office:

X	Transmittal Compl. & Fil. Reg.		Amendment and/or Response
	Specification - No. of Pages		Info. Disclosure Statement
	Claims - No. of Pages		TM or SM Appl. - No. of Pages
	Abstract - No. of Pages		Specimens - No. of
X	Decl. and Power of Atty.	X	Fee: $1382.00** Enclosed
X	Assignment		Drawings - No. of Sheets
	Small Entity Statement		**Check No. 22371
X	PTO-1595		
X	copy of Notice to File Missing Parts		

OIPE JC10 JUN 12 2003 PATENT & TRADEMARK OFFICE

Attorney: KQL/caw Date Mailed: 6/10/03 Docket No. 944-001.105

Please date stamp and return

RECEIVED
WARE, FRESSOLA, VAN DER SLUYS
& ADOLPHSON
JUN 17 2003
FILE 944.001.105
ANS'D. KQL

OIPE IAP40
FEB 27 2009
PATENT & TRADEMARK OFFICE

COMBINED DECLARATION AND POWER OF ATTORNEY

944-001.105
(Docket Number)

As a below named inventor, I hereby declare that:

- my residence, post office address and citizenship are as stated below next to my name;
- I believe I am the original, first and sole inventor (if only one name is listed below) or an original, first and joint inventor (if plural names are listed below) of the subject matter which is claimed and for which a patent is sought on the invention entitled: METHOD FOR CODING MOTION IN A VIDEO SEQUENCE;
- the specification of which is attached hereto unless the following box is checked: ☒ If the box is checked,

  the application was filed on March 14, 2003,
  as U.S. Application Number 10/390,549,
  or PCT International Application Number
  and was amended on (if applicable).

I hereby state that I have reviewed and understand the contents of the above identified specification, including the claims, as amended by any amendment referred to above.

I acknowledge the duty to disclose information which is material to patentability as defined in 37 CFR §1.56.

I hereby claim foreign priority benefits under 35 U.S.C. §119(a)-(d) or §365(b) of any foreign application(s) for patent or inventor's certificate, or §365(a) of any PCT International application which designated at least one country other than the United States, listed below and have also identified below, by checking the box, any foreign application for patent or inventor's certificate, or PCT International application having a filing date before that of the application on which priority is claimed.

Prior Foreign Application			Priority Not Claimed
(Application Number)	(Country)	(Day/Month/Year Filed)	☐
(Application Number)	(Country)	(Day/Month/Year Filed)	☐

To the extent permitted by rule or law, I hereby incorporate by reference the Prior Foreign Application(s) listed above.

I hereby claim the benefits under 35 U.S.C. §119(e) of any United States provisional application(s) listed below:

60/365,072 (Provisional Application Number)	15/03/2002 (Day/Month/Year Filed)
(Provisional Application Number)	(Day/Month/Year Filed)

I hereby claim the benefit under 35 U.S.C. §120 of any United States application(s), or §365(c) of any PCT International application designating the United States, listed below and, insofar as the subject matter of each of the claims of this application is not disclosed in the prior United States or PCT International application in the manner provided by the first paragraph of 35 U.S.C. §112, I acknowledge the duty to disclose information which is material to patentability, as defined in 37 CFR §1.56, which became available between the filing date of the prior application and the national or PCT International filing date of this application.

(Application Number)	(Day/Month/Year Filed)	(Status: patented, pending, abandoned)
(Application Number)	(Day/Month/Year Filed)	(Status: patented, pending, abandoned)

O.I.P.E. IAP40
FEB 27 2009
PATENT & TRADEMARK OFFICE

Best Available Copy

I hereby appoint the attorney(s) and/or agent(s) assigned to the customer number listed below, as may from time to time be amended, belonging to the firm of Ware, Fressola, Van Der Sluys & Adolphson LLP, to prosecute this application and to transact all business in the Patent and Trademark Office connected therewith.

Customer Number

4955

04955
PATENT TRADEMARK OFFICE

Address all telephone calls to: Ware, Fressola, Van Der Sluys & Adolphson LLP at (203) 261-1234. Address all correspondence to:

Customer Number

4955

04955
PATENT TRADEMARK OFFICE

I hereby declare that all statements made herein of my own knowledge are true and that all statements made on information and belief are believed to be true; and further that these statements were made with the knowledge that willful false statements and the like so made are punishable by fine or imprisonment, or both, under Section 1001 of Title 18 of the United States Code, and that such willful false statements may jeopardize the validity of the application or any patent issued thereon.

Jani LAINEMA Full name of sole or first inventor (given name, middle initial, FAMILY NAME(S) IN UPPER CASE)	
Inventor's Signature	4/14/2003 Date
Irving, Texas USA Residence	Finland Citizenship
Post Office Address: 6000 Connection Drive, Irving, Texas 75039, USA	

Full name of second inventor (given name, middle initial, FAMILY NAME(S) IN UPPER CASE)	
Inventor's Signature	Date
Residence	Citizenship
Post Office Address	

Full name of third inventor (given name, middle initial, FAMILY NAME(S) IN UPPER CASE)	
Inventor's Signature	Date
Residence	Citizenship
Post Office Address	

☐ Additional inventors are being named on separately numbered sheets attached hereto.

Form PTO-1595
(Rev. 6-93)
OMB No. 0651-0011 (exp. 4/94)

RECORDATION FORM COVER SHEET

PATENTS ONLY

U.S. Department of Commerce
Patent and Trademark Office

Attorney Docket No. 944-001.105

To the Honorable Commissioner of Patents and Trademarks: Please record the attached original documents or copy thereof.

1. Name of conveying party(ies):
   Jani Lainema

   Additional name(s) of conveying party(ies) attached?
   ☐ Yes ☒ No

3. Nature of conveyance:
   ☒ Assignment ☐ Merger
   ☐ Security Agreement ☐ Change of Name
   ☐ Other _____
   Execution Date: April 14, 2003

2. Name and address of receiving party(ies):
   Nokia Corporation
   Keilalahdentie 4
   FIN-02150
   Espoo, Finland

   Additional name(s) and address(es) attached?
   ☐ Yes ☒ No

OIPE IAP40 FEB 27 2009 PATENT & TRADEMARK OFFICE

4. Application number(s) or patent number(s):

   If this document is being filed together with a new application, the execution date of the application is: _____

   A. Patent Application No.(s)

   S/N 10/390,549 filed March 14, 2003

   B. Patent No.(s)

   Additional numbers attached? ☐ Yes ☒ No

5. Name and address of party to whom correspondence concerning document should be mailed:

   Kenneth Q. Lao
   Ware Fressola, Van Der Sluys & Adolphson LLP
   Bradford Green, Building 5
   755 Main Street
   P.O. Box 224
   Monroe, CT 06468-0224

6. Total number of applications and patents involved: 1

7. Total fee (37 CFR 3.41) $ 40.00
   ☒ Enclosed
   ☐ Authorized to be charged to deposit account

8. Deposit account number:
   23-0442
   (Attach duplicate copy of this page if paying by deposit account.)

Statement and signature:

To the best of my knowledge and belief, the foregoing information is true and correct and any attachment copy is a true copy of the original document.

Kenneth Q. Lao — Name of Person Signing
Ken Lao — Signature
6/9/2003 — Date

Total number of pages including cover sheet, attachments, and document: 3

Mail documents to be recorded with required cover sheet information to:
Mail Stop Assignment Recordation Services, Commissioner of Patents,
P.O. Box 1450, Alexandria, VA 22313-1450.

ASSIGNMENT AND AGREEMENT

FOR VALUE RECEIVED, I, JANI LAINEMA, a citizen of Finland and residing at 6000 Connection Drive, Irving, Texas 75039, USA, hereby sell, assign and transfer to **NOKIA CORPORATION**, a corporation duly organized and existing under the laws of Finland, and having a principal place of business at Keilalahdentie 4, FIN-02150 Espoo, Finland, as assignee, and its successors, assigns and legal representatives, the entire right, title and interest, for all countries in and to certain inventions relating to improvements in a METHOD FOR CODING MOTION IN A VIDEO SEQUENCE, which is described in an application for Letters Patent of the United States, Serial No. 10/390,549 filed March 14, 2003, and all the rights and privileges under any and all Letters Patent that may be granted therefor.

I request that any and all patents for said inventions be issued to said assignee, its successors, assigns and legal representatives, or to such nominees as it may designate.

I agree that, when requested, I will, without charge to said assignee but at its expense, sign all papers, take all rightful oaths, and do all acts which may be necessary, desirable or convenient for securing and maintaining patents for said inventions in any and all countries and for vesting title thereto in said assignee, its successors, assigns and legal representatives or nominees.

I authorize and empower the said assignee, its successors, assigns and legal representatives or nominees, to invoke and claim for any application for patent or other form of protection for said inventions filed by it or them, the benefit of the right of priority provided by: (a) the International Convention for the Protection of Industrial property, as amended, or by convention which may henceforth be substituted for it; and (b) the Patent Cooperation Treaty, as amended, or by any treaty which may henceforth be substituted for it; and to invoke and claim such right of priority without further written or oral authorization from us.

I hereby consent that a copy of this assignment shall be deemed a full legal and formal equivalent of any assignment, consent to file or like document which may be required in any country for any purpose and more particularly in proof of the right of the said assignee or nominee to claim the aforesaid benefit of the right of priority provided by: (a) the International Convention for the protection of Industrial

Property, as amended, or by any convention which may henceforth be substituted for it; and (b) the Patent Cooperation Treaty, as amended, or by any treaty which may henceforth be substituted for it.

I covenant with said assignee, it successors and assigns and legal representatives, that the rights and property herein conveyed are free and clear of any encumbrance, and that I have full right to convey the same as herein expressed.

Signed at IRVING, TX this 14th day of APRIL, in the year 2003.

Jani Laimema

Signed in our presence and acknowledged to be an assignment of the application (invention) herein above referred to.

Witness: _____ Date 04/14/03

Witness: _____ Date 04/14/03

PART B - FEE(S) TRANSMITTAL

Complete and send this form, together with applicable fee(s), to: Mail **Mail Stop ISSUE FEE**
Commissioner for Patents
P.O. Box 1450
Alexandria, Virginia 22313-1450
or Fax (571)-273-2885

INSTRUCTIONS: This form should be used for transmitting the ISSUE FEE and PUBLICATION FEE (if required). Blocks 1 through 5 should be completed where appropriate. All further correspondence including the Patent, advance orders and notification of maintenance fees will be mailed to the current correspondence address as indicated unless corrected below or directed otherwise in Block 1, by (a) specifying a new correspondence address; and/or (b) indicating a separate "FEE ADDRESS" for maintenance fee notifications.

CURRENT CORRESPONDENCE ADDRESS (Note: Use Block 1 for any change of address)

4955 7590 01/09/2009

WARE FRESSOLA VAN DER SLUYS & ADOLPHSON, LLP
BRADFORD GREEN, BUILDING 5
755 MAIN STREET, P O BOX 224
MONROE, CT 06468

04/07/2009 SSITHIB2 00000069 10390549

01 FC:1501 1510.00 OP
02 FC:1504 300.00 OP

OIPE IAP85 APR 06 2009 PATENT & TRADEMARK OFFICE

Note: A certificate of mailing can only be used for domestic mailings of the Fee(s) Transmittal. This certificate cannot be used for any other accompanying papers. Each additional paper, such as an assignment or formal drawing, must have its own certificate of mailing or transmission.

Certificate of Mailing or Transmission

I hereby certify that this Fee(s) Transmittal is being deposited with the United States Postal Service with sufficient postage for first class mail in an envelope addressed to the Mail Stop ISSUE FEE address above, or being facsimile transmitted to the USPTO (571) 273-2885, on the date indicated below.

Marie E. Forte (Depositor's name)
Marie Forte (Signature)
April 2, 2009 (Date)

APPLICATION NO.	FILING DATE	FIRST NAMED INVENTOR	ATTORNEY DOCKET NO.	CONFIRMATION NO.
10/390,549	03/14/2003	Jani Lainema	944-001.105	3966

TITLE OF INVENTION: METHOD FOR CODING MOTION IN A VIDEO SEQUENCE

APPLN. TYPE	SMALL ENTITY	ISSUE FEE DUE	PUBLICATION FEE DUE	PREV. PAID ISSUE FEE	TOTAL FEE(S) DUE	DATE DUE
nonprovisional	NO	$1510	$300	$0	$1810	04/09/2009

EXAMINER	ART UNIT	CLASS-SUBCLASS
NGUYEN, HUY THANH	2621	386-111000

1. Change of correspondence address or indication of "Fee Address" (37 CFR 1.363).
   - ☐ Change of correspondence address (or Change of Correspondence Address form PTO/SB/122) attached.
   - ☐ "Fee Address" indication (or "Fee Address" Indication form PTO/SB/47; Rev 03-02 or more recent) attached. **Use of a Customer Number is required.**

2. For printing on the patent front page, list
   (1) the names of up to 3 registered patent attorneys or agents OR, alternatively,
   (2) the name of a single firm (having as a member a registered attorney or agent) and the names of up to 2 registered patent attorneys or agents. If no name is listed, no name will be printed.

   1 Ware, Fressola, Van Der Sluys & Adolphson, LLP
   2 755 Main Street P. O. Box 224
   3 Monroe, CT 06468

3. ASSIGNEE NAME AND RESIDENCE DATA TO BE PRINTED ON THE PATENT (print or type)

PLEASE NOTE: Unless an assignee is identified below, no assignee data will appear on the patent. If an assignee is identified below, the document has been filed for recordation as set forth in 37 CFR 3.11. Completion of this form is NOT a substitute for filing an assignment.

(A) NAME OF ASSIGNEE: Nokia Corporation

(B) RESIDENCE: (CITY and STATE OR COUNTRY): Espoo, Finland

Please check the appropriate assignee category or categories (will not be printed on the patent): ☐ Individual ☒ Corporation or other private group entity ☐ Government

4a. The following fee(s) are submitted:
- ☒ Issue Fee
- ☒ Publication Fee (No small entity discount permitted)
- ☐ Advance Order - # of Copies _____

4b. Payment of Fee(s): **(Please first reapply any previously paid issue fee shown above)**
- ☒ A check is enclosed.
- ☐ Payment by credit card. Form PTO-2038 is attached.
- ☒ The Director is hereby authorized to charge the required fee(s), any deficiency, or credit any overpayment, to Deposit Account Number 23-0442 (enclose an extra copy of this form).

5. **Change in Entity Status** (from status indicated above)
- ☐ a. Applicant claims SMALL ENTITY status. See 37 CFR 1.27.
- ☐ b. Applicant is no longer claiming SMALL ENTITY status. See 37 CFR 1.27(g)(2).

NOTE: The Issue Fee and Publication Fee (if required) will not be accepted from anyone other than the applicant; a registered attorney or agent; or the assignee or other party in interest as shown by the records of the United States Patent and Trademark Office.

Authorized Signature: Ken Lao Date: April 1, 2009

Typed or printed name: Kenneth Q. Lao Registration No. 40,061

This collection of information is required by 37 CFR 1.311. The information is required to obtain or retain a benefit by the public which is to file (and by the USPTO to process) an application. Confidentiality is governed by 35 U.S.C. 122 and 37 CFR 1.14. This collection is estimated to take 12 minutes to complete, including gathering, preparing, and submitting the completed application form to the USPTO. Time will vary depending upon the individual case. Any comments on the amount of time you require to complete this form and/or suggestions for reducing this burden, should be sent to the Chief Information Officer, U.S. Patent and Trademark Office, U.S. Department of Commerce, P.O. Box 1450, Alexandria, Virginia 22313-1450. DO NOT SEND FEES OR COMPLETED FORMS TO THIS ADDRESS. SEND TO: Commissioner for Patents, P.O. Box 1450, Alexandria, Virginia 22313-1450.

Under the Paperwork Reduction Act of 1995, no persons are required to respond to a collection of information unless it displays a valid OMB control number.

UNITED STATES PATENT AND TRADEMARK OFFICE

UNITED STATES DEPARTMENT OF COMMERCE
United States Patent and Trademark Office
Address: COMMISSIONER FOR PATENTS
P.O. Box 1450
Alexandria, Virginia 22313-1450
www.uspto.gov

APPLICATION NO.	ISSUE DATE	PATENT NO.	ATTORNEY DOCKET NO.	CONFIRMATION NO.
10/390,549	05/12/2009	7532808	944-001.105	3966

4955 7590 04/22/2009
WARE FRESSOLA VAN DER SLUYS & ADOLPHSON, LLP
BRADFORD GREEN, BUILDING 5
755 MAIN STREET, P O BOX 224
MONROE, CT 06468

ISSUE NOTIFICATION

The projected patent number and issue date are specified above.

Determination of Patent Term Adjustment under 35 U.S.C. 154 (b)
(application filed on or after May 29, 2000)

The Patent Term Adjustment is 1003 day(s). Any patent to issue from the above-identified application will include an indication of the adjustment on the front page.

If a Continued Prosecution Application (CPA) was filed in the above-identified application, the filing date that determines Patent Term Adjustment is the filing date of the most recent CPA.

Applicant will be able to obtain more detailed information by accessing the Patent Application Information Retrieval (PAIR) WEB site (http://pair.uspto.gov).

Any questions regarding the Patent Term Extension or Adjustment determination should be directed to the Office of Patent Legal Administration at (571)-272-7702. Questions relating to issue and publication fee payments should be directed to the Customer Service Center of the Office of Patent Publication at (571)-272-4200.

APPLICANT(s) (Please see PAIR WEB site http://pair.uspto.gov for additional applicants):

Jani Lainema, Irving, TX;

AO 120 (Rev. 08/10)

TO:	Mail Stop 8 Director of the U.S. Patent and Trademark Office P.O. Box 1450 Alexandria, VA 22313-1450	REPORT ON THE FILING OR DETERMINATION OF AN ACTION REGARDING A PATENT OR TRADEMARK

In Compliance with 35 U.S.C. § 290 and/or 15 U.S.C. § 1116 you are hereby advised that a court action has been filed in the U.S. District Court Eastern District of Texas on the following

☐ Trademarks or ☑ Patents. (☐ the patent action involves 35 U.S.C. § 292.):

DOCKET NO.	DATE FILED	U.S. DISTRICT COURT
2:16-cv-1440	12/21/2016	Eastern District of Texas

PLAINTIFF	DEFENDANT
Nokia Technologies OY and Alcatel-Lucent USA Inc.	Apple Inc.

PATENT OR TRADEMARK NO.	DATE OF PATENT OR TRADEMARK	HOLDER OF PATENT OR TRADEMARK
1 6,680,974	1/20/2004	Alcatel-Lucent USA Inc.
2 6,711,211	3/23/2004	Nokia Technologies Oy
3 6,856,701	2/15/2005	Nokia Technologies Oy
4 6,950,469	9/27/2005	Nokia Technologies Oy
5 6,968,005	11/22/2005	Nokia Technologies Oy

In the above—entitled case, the following patent(s)/ trademark(s) have been included:

DATE INCLUDED	INCLUDED BY ☐ Amendment ☐ Answer ☐ Cross Bill ☐ Other Pleading	
PATENT OR TRADEMARK NO.	DATE OF PATENT OR TRADEMARK	HOLDER OF PATENT OR TRADEMARK
1 7,532,808	5/12/2009	Nokia Technologies Oy
2 8,036,273	10/11/2011	Nokia Technologies Oy
3 8,144,764	3/27/2012	Nokia Technologies Oy
4		
5		

In the above—entitled case, the following decision has been rendered or judgement issued:

DECISION/JUDGEMENT

CLERK	(BY) DEPUTY CLERK	DATE

Copy 1—Upon initiation of action, mail this copy to Director **Copy 3—Upon termination of action, mail this copy to Director**
Copy 2—Upon filing document adding patent(s), mail this copy to Director **Copy 4—Case file copy**

AO 120 (Rev. 08/10)

TO: Mail Stop 8 Director of the U.S. Patent and Trademark Office P.O. Box 1450 Alexandria, VA 22313-1450	REPORT ON THE FILING OR DETERMINATION OF AN ACTION REGARDING A PATENT OR TRADEMARK

In Compliance with 35 U.S.C. § 290 and/or 15 U.S.C. § 1116 you are hereby advised that a court action has been filed in the U.S. District Court Eastern District of Texas on the following

☐ Trademarks or ☑ Patents. (☐ the patent action involves 35 U.S.C. § 292.):

DOCKET NO.	DATE FILED	U.S. DISTRICT COURT
2:16-cv-1440	12/21/2016	Eastern District of Texas

PLAINTIFF	DEFENDANT
Nokia Technologies OY and Alcatel-Lucent USA Inc.	Apple Inc.

	PATENT OR TRADEMARK NO.	DATE OF PATENT OR TRADEMARK	HOLDER OF PATENT OR TRADEMARK
1	6,680,974	1/20/2004	Alcatel-Lucent USA Inc.
2	6,711,211	3/23/2004	Nokia Technologies Oy
3	6,856,701	2/15/2005	Nokia Technologies Oy
4	6,950,469	9/27/2005	Nokia Technologies Oy
5	6,968,005	11/22/2005	Nokia Technologies Oy

In the above—entitled case, the following patent(s)/ trademark(s) have been included:

DATE INCLUDED	INCLUDED BY ☐ Amendment ☐ Answer ☐ Cross Bill ☐ Other Pleading	
PATENT OR TRADEMARK NO.	DATE OF PATENT OR TRADEMARK	HOLDER OF PATENT OR TRADEMARK
1 7,532,808	5/12/2009	Nokia Technologies Oy
2 8,036,273	10/11/2011	Nokia Technologies Oy
3 8,144,764	3/27/2012	Nokia Technologies Oy
4		
5		

In the above—entitled case, the following decision has been rendered or judgement issued:

DECISION/JUDGEMENT

CLERK	(BY) DEPUTY CLERK	DATE

Copy 1—Upon initiation of action, mail this copy to Director Copy 3—Upon termination of action, mail this copy to Director
Copy 2—Upon filing document adding patent(s), mail this copy to Director Copy 4—Case file copy

IN THE UNITED STATES PATENT AND TRADEMARK OFFICE

In re:	Jani Lainema	Confirmation No. 3966
Appl. No.:	10/390,549	Patent No.: 7,532,808
Filed:	March 14, 2003	Issue Date: May 12, 2009
For:	METHOD FOR CODING MOTION IN A VIDEO SEQUENCE	

Certificate of Correction Branch
Commissioner for Patents
P.O. Box 1450
Alexandria, VA 22313-1450

REQUEST FOR CERTIFICATE OF CORRECTION

On behalf of the Assignee of the above-referenced patent, Nokia Technologies Oy, it is hereby requested that the Office issue a Certificate of Correction in order to make a correction to claim 43 as set forth in the attached Certificate of Correction. Specifically, claim 43 should be dependent from claim 7 instead of claim 1. The error is due to a typographical error made by the Applicant as explained below.

In the Amendment filed on November 1, 2007, Applicant presented new claim 48 (final claim 43) which claimed dependency from claim 8 (final claim 7). This is correct. However, in the subsequent Amendment filed on September 2, 2008, in original claim 48, the claim dependency was listed as being dependent from claim 1 instead of claim 8, even though the claim was not being amended as confirmed by the claim identifier "previously presented." The change of claim dependency was an inadvertent typographical error, which continued to carry over throughout the remainder of prosecution.

In view of the above, it is respectfully requested that the Examiner approve the requested correction as set forth in the attached Certificate of Correction and as outlined below:

- Final claim 43 (original claim 48) should be dependent from final claim 7 (original claim 8).

The required Certificate of Correction fee of $150 is being paid during e-filing concurrently herewith.

Respectfully submitted,

/Guy R. Gosnell/

Guy R. Gosnell
Registration No. 34,610

ALSTON & BIRD LLP
Bank of America Plaza
101 South Tryon Street, Suite 4000
Charlotte, NC 28280-4000
Tel Charlotte Office (704) 444-1000
Fax Charlotte Office (704) 444-1111

UNITED STATES PATENT AND TRADEMARK OFFICE
CERTIFICATE OF CORRECTION

PATENT NO. : 7,532,808 B2 Page 1 of 1

APPLICATION NO. : 10/390,549

ISSUE DATE : May 12, 2009

INVENTOR(S) : Lainema

It is certified that an error appears or errors appear in the above-identified patent and that said Letters Patent is hereby corrected as shown below:

In the Claims

Column 31,
Line 23, Claim 43, "claim 1" should read --claim 7--.

MAILING ADDRESS OF SENDER

ALSTON & BIRD LLP
Bank of America Plaza
101 South Tryon Street, Suite 4000
Charlotte, NC 28280-4000
Tel Charlotte Office (704) 444-1000

Electronic Patent Application Fee Transmittal

Application Number:	10390549
Filing Date:	14-Mar-2003
Title of Invention:	METHOD FOR CODING MOTION IN A VIDEO SEQUENCE
First Named Inventor/Applicant Name:	Jani Lainema
Filer:	Guy Randall Gosnell/Kimberly Shaul
Attorney Docket Number:	944-001.105

Filed as Large Entity

Filing Fees for Utility under 35 USC 111(a)

Description	Fee Code	Quantity	Amount	Sub-Total in USD($)
Basic Filing:				
Pages:				
Claims:				
Miscellaneous-Filing:				
Petition:				
Patent-Appeals-and-Interference:				
Post-Allowance-and-Post-Issuance:				
CERTIFICATE OF CORRECTION	1811	1	150	150

Description	Fee Code	Quantity	Amount	Sub-Total in USD($)
Extension-of-Time:				
Miscellaneous:				
			Total in USD ($)	**150**

Electronic Acknowledgement Receipt

EFS ID:	37968225
Application Number:	10390549
International Application Number:	
Confirmation Number:	3966
Title of Invention:	METHOD FOR CODING MOTION IN A VIDEO SEQUENCE
First Named Inventor/Applicant Name:	Jani Lainema
Customer Number:	4955
Filer:	Guy Randall Gosnell/Kimberly Shaul
Filer Authorized By:	Guy Randall Gosnell
Attorney Docket Number:	944-001.105
Receipt Date:	09-DEC-2019
Filing Date:	14-MAR-2003
Time Stamp:	13:44:52
Application Type:	Utility under 35 USC 111(a)

Payment information:

Submitted with Payment	yes
Payment Type	DA
Payment was successfully received in RAM	$150
RAM confirmation Number	E2019B9D45180654
Deposit Account	
Authorized User	

The Director of the USPTO is hereby authorized to charge indicated fees and credit any overpayment as follows:

File Listing:

Document Number	Document Description	File Name	File Size(Bytes)/ Message Digest	Multi Part /.zip	Pages (if appl.)
1	Request for Certificate of Correction	NC17605CC.pdf	31573 a9797a561102990ae61171aee4a42cd6ba227258	no	3
Warnings:					
Information:					
2	Fee Worksheet (SB06)	fee-info.pdf	30276 851ab8467e9b6e9ed0b9b6a39ae29ede663d12b3	no	2
Warnings:					
Information:					
		Total Files Size (in bytes):	61849		

This Acknowledgement Receipt evidences receipt on the noted date by the USPTO of the indicated documents, characterized by the applicant, and including page counts, where applicable. It serves as evidence of receipt similar to a Post Card, as described in MPEP 503.

New Applications Under 35 U.S.C. 111
If a new application is being filed and the application includes the necessary components for a filing date (see 37 CFR 1.53(b)-(d) and MPEP 506), a Filing Receipt (37 CFR 1.54) will be issued in due course and the date shown on this Acknowledgement Receipt will establish the filing date of the application.
National Stage of an International Application under 35 U.S.C. 371
If a timely submission to enter the national stage of an international application is compliant with the conditions of 35 U.S.C. 371 and other applicable requirements a Form PCT/DO/EO/903 indicating acceptance of the application as a national stage submission under 35 U.S.C. 371 will be issued in addition to the Filing Receipt, in due course.
New International Application Filed with the USPTO as a Receiving Office
If a new international application is being filed and the international application includes the necessary components for an international filing date (see PCT Article 11 and MPEP 1810), a Notification of the International Application Number and of the International Filing Date (Form PCT/RO/105) will be issued in due course, subject to prescriptions concerning national security, and the date shown on this Acknowledgement Receipt will establish the international filing date of the application.

UNITED STATES PATENT AND TRADEMARK OFFICE

CERTIFICATE OF CORRECTION

PATENT NO. : 7,532,808 B2
APPLICATION NO. : 10/390549
DATED : May 12, 2009
INVENTOR(S) : Lainema

It is certified that error appears in the above-identified patent and that said Letters Patent is hereby corrected as shown below:

In the Claims

Column 31,
Line 23, Claim 43, "claim 1" should read --claim 7--.

Signed and Sealed this
Twenty-first Day of January, 2020

Andrei Iancu
Director of the United States Patent and Trademark Office

AO 120 (Rev. 08/10)

TO: Mail Stop 8 Director of the U.S. Patent and Trademark Office P.O. Box 1450 Alexandria, VA 22313-1450	REPORT ON THE FILING OR DETERMINATION OF AN ACTION REGARDING A PATENT OR TRADEMARK

In Compliance with 35 U.S.C. § 290 and/or 15 U.S.C. § 1116 you are hereby advised that a court action has been filed in the U.S. District Court Eastern District of North Carolina on the following

☐ Trademarks or ☑ Patents. (☐ the patent action involves 35 U.S.C. § 292.):

DOCKET NO.	DATE FILED	U.S. DISTRICT COURT
5:19-CV-427-BO	9/25/2019	Eastern District of North Carolina

PLAINTIFF	DEFENDANT
Nokia Technologies Oy	Lenovo (Shanghai) Electronics Technology Co., Ltd. et al

PATENT OR TRADEMARK NO.	DATE OF PATENT OR TRADEMARK	HOLDER OF PATENT OR TRADEMARK
1 6,856,701		
2 6,950,469		
3 6,968,005		
4 7,263,125		
5 7,280,599		

In the above—entitled case, the following patent(s)/ trademark(s) have been included:

DATE INCLUDED	INCLUDED BY ☐ Amendment ☐ Answer ☐ Cross Bill ☐ Other Pleading	
PATENT OR TRADEMARK NO.	DATE OF PATENT OR TRADEMARK	HOLDER OF PATENT OR TRADEMARK
1 7,532,808		
2 7,724,818		
3 8,036,273		
4 8,144,764		
5 9,800,891		

In the above—entitled case, the following decision has been rendered or judgement issued:

DECISION/JUDGEMENT

CLERK	(BY) DEPUTY CLERK	DATE
PETER A. MOORE, JR.	Joann Rudd, Deputy	9/26/2019

Copy 1—Upon initiation of action, mail this copy to Director **Copy 3—Upon termination of action, mail this copy to Director**
Copy 2—Upon filing document adding patent(s), mail this copy to Director **Copy 4—Case file copy**

AO 120 (Rev. 08/10)

TO: Mail Stop 8 Director of the U.S. Patent and Trademark Office P.O. Box 1450 Alexandria, VA 22313-1450	REPORT ON THE FILING OR DETERMINATION OF AN ACTION REGARDING A PATENT OR TRADEMARK

In Compliance with 35 U.S.C. § 290 and/or 15 U.S.C. § 1116 you are hereby advised that a court action has been filed in the U.S. District Court Eastern District of North Carolina on the following

☐ Trademarks or ☑ Patents. (☐ the patent action involves 35 U.S.C. § 292.):

DOCKET NO.	DATE FILED	U.S. DISTRICT COURT
5:19-CV-427-BO	9/25/2019	Eastern District of North Carolina

PLAINTIFF	DEFENDANT
Nokia Technologies Oy	Lenovo (Shanghai) Electronics Technology Co., Ltd. et al

PATENT OR TRADEMARK NO.	DATE OF PATENT OR TRADEMARK	HOLDER OF PATENT OR TRADEMARK
1 6,856,701		
2 6,950,469		
3 6,968,005		
4 7,263,125		
5 7,280,599		

In the above—entitled case, the following patent(s)/ trademark(s) have been included:

DATE INCLUDED	INCLUDED BY ☐ Amendment ☐ Answer ☐ Cross Bill ☐ Other Pleading	
PATENT OR TRADEMARK NO.	DATE OF PATENT OR TRADEMARK	HOLDER OF PATENT OR TRADEMARK
1 7,532,808		
2 7,724,818		
3 8,036,273		
4 8,144,764		
5 9,800,891		

In the above—entitled case, the following decision has been rendered or judgement issued:

DECISION/JUDGEMENT

CLERK	(BY) DEPUTY CLERK	DATE
PETER A. MOORE, JR.	Joann Rudd, Deputy	9/26/2019

Copy 1—Upon initiation of action, mail this copy to Director **Copy 3—Upon termination of action, mail this copy to Director**
Copy 2—Upon filing document adding patent(s), mail this copy to Director **Copy 4—Case file copy**