Wireless Pers Commun (2014) 79:235–248
DOI 10.1007/s11277-014-1851-7

Dynamic 20/40/60/80 MHz Channel Access for 80 MHz 802.11ac

Andrzej Stelter · Paweł Szulakiewicz · Robert Kotrys · Maciej Krasicki · Piotr Remlein

Published online: 30 May 2014
© The Author(s) 2014. This article is published with open access at Springerlink.com

Abstract This paper is to contribute a new dynamic channel access method for wireless local area networks. It allows a station accessing the 80 or 160 MHz channel to capture every idle non-primary 20 MHz channel along with the primary 20 MHz channel, whereas the number of channel configurations in which the station can transmit according to the 802.11ac standard is strictly limited. Simulation results shown in the paper prove the proposed access method to be superior to the method provided by the 802.11ac standard in terms of average network throughput. What is important for legacy reasons, the proposed method employs the conventional clear channel assessment function to determine which of the 20 MHz channels are idle and which are busy. The paper proposes a new receiver design that is able to reject the adjacent channel interference, arising as a result of the presence of the legacy 802.11a/n station signals inside the 80 or 160 MHz accessed channel.

Keywords 802.11ac · WLAN · Dynamic bandwidth channel access · Adjacent channel interference (ACI) rejection

1 Introduction

The IEEE 802.11ac Task Group (TG) has recently approved an amendment to IEEE 802.11 PHY and MAC layers [1]. The TG has proposed to use 80 MHz or even 160 MHz wide chan-

A. Stelter (✉)· P. Szulakiewicz · R. Kotrys · M. Krasicki · P. Remlein
Poznan University of Technology, Poznan, Poland
e-mail: Andrzej.Stelter@et.put.poznan.pl

P. Szulakiewicz
e-mail: Pawel.Szulakiewicz@et.put.poznan.pl

R. Kotrys
e-mail: Robert.Kotrys@et.put.poznan.pl

M. Krasicki
e-mail: Maciej.Krasicki@et.put.poznan.pl

P. Remlein
e-mail: Piotr.Remlein@et.put.poznan.pl

Wilus Institute of Standards and Technology Inc.,
Ex. 2017, IPR2025-01111
Page 1 of 14

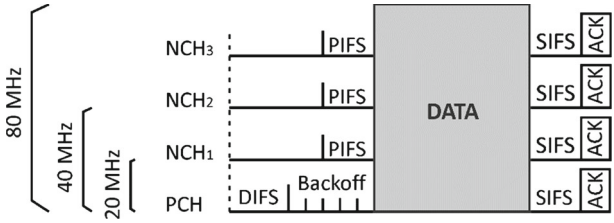

Fig. 1 Channel access procedure in 802.11ac

nels. It is known that to obtain the desired increase of the 80 or 160 MHz channel throughput, the channel has to be efficiently utilized. It is a challenge caused by the coexistence of legacy 802.11a and 802.11n stations, operating in 20 and 40 MHz channels. The legacy stations make a new 802.11ac network less likely to have its 80 MHz or 160 MHz channel clear, as the network has to share its channel with the legacy 802.11a/n networks that operate in the same channel.

Different aspects of the 80 MHz channel access, e.g. the transmission probability for the 80 MHz channel, benefits and drawbacks of transmission over fragmented and not fragmented 80 MHz (and 160 MHz) channels, as well as vertical or horizontal multichannel aggregation, have been studied in the literature [2–4].

The recently approved IEEE 802.11ac standard amendment [1] allows dynamic and static channel access modes. The channel access procedure in 802.11ac (for 80 MHz channel) is illustrated in Fig. 1. The 80 MHz channel consists of four 20 MHz channels: one primary (PCH) and three non-primary (NCH_1, NCH_2, NCH_3).

According to the 80 MHz bandwidth static access mode, the transmission can begin only if the primary 20 MHz channel has been idle for a distributed coordination function inter-frame space (DIFS) interval plus backoff counter time and each of the non-primary channels have been idle for a point coordination function inter-frame space (PIFS) interval immediately preceding the expiration of the backoff counter. The results of simulations [5] show that the utilization of the 80 MHz channel in which legacy 802.11a/n networks operate is very inefficient in the case of the static assignment mode.

The dynamic channel access method allows the physical layer convergence procedure protocol data unit (PPDU) transmission to run:

- over the primary 20 MHz channel (PCH) when the non-primary channel NCH_1, adjacent to the primary channel, is busy,
- over the 40 MHz channel when the primary 20 MHz channel (PCH) and adjacent non-primary channel (NCH_1) are idle, but at least one of the NCH_2 and NCH_3 channels is busy,
- over the 80 MHz channel when there are the same conditions allowing 80 MHz transmission in the static channel access mode.

Results in [5] show that the dynamic 80 MHz channel access improves the efficiency of channel utilization in comparison to the static channel access when legacy 802.11a/n networks are operating in the same channel. It is worth to notice that the dynamic channel access leaves some 20 MHz non-primary idle channels unused, which is a waste of a scarce telecommunication spectrum.

In this paper, we propose a new dynamic 20/40/60/80 MHz bandwidth channel access method which outperforms the static and dynamic methods referred to above in terms

Wilus Institute of Standards and Technology Inc.,
Ex. 2017, IPR2025-01111
Page 2 of 14

of the system throughput. We consider an 802.11ac network operating in the 80 MHz channel but our proposal can be applied to the 160 MHz channel as well. We assume that each station in the network is equipped with a transmitter capable of transmitting over any combination of 20 MHz subchannels the 80 MHz channel consists of, and with a receiver capable of processing 80 MHz wide signals. During the clear channel assessment (CCA) procedure performed by the 80 MHz 802.11ac station, any of the 20 MHz non-primary channels can be occupied by the legacy station's 20 and/or 40 MHz 802.11a/n signals. In such cases, the 802.11ac signal is transmitted in the primary 20 MHz channel and in all idle non-primary channels, not necessary adjacent to the primary channel. The proposed dynamic 20/40/60/80 channel access method is elaborated in Sect. 2.

The legacy station signals occupying non-primary channels are not synchronous with the desired 802.11ac signal, so that the adjacent channel interference (ACI) phenomenon occurs. In Sect. 3, we show how to deal with ACI by means of the successive interference cancellation method delivered in [6–8]. In Sect. 4, the simulation results are presented to display the advantages of the new channel access method. Finally, in Sect. 5, conclusions are drawn.

2 Dynamic Bandwidth Channel Access Method Utilizing Successive Interference Cancellation

In this paper, we propose to grant the 802.11ac station the right to start PPDU transmission in the primary 20 MHz channel, if it has been idle for a DIFS plus the backoff counter time, and simultaneously, in any 20 MHz wide non-primary channel that has been idle for the PIFS immediately preceding the expiration of the primary channel backoff counter. The proposed approach to channel access gives an opportunity to enhance throughput, since, on average, the 802.11ac station would use a wider bandwidth than it is allowed in [1]. Some examples of different channel assignments allowed by the considered 20/40/60/80 MHz dynamic bandwidth channel access are shown in Fig. 2. Note that for the scenarios presented in Fig. 2b, d, both dynamic channel access methods considered in the paper allow transmission in the same 40 and 20 MHz channel, respectively. However, in the scenarios presented in Fig. 2a, c, the dynamic 802.11ac channel access method allows transmission in the 20 MHz channel, whereas the 20/40/60/80 MHz method allows transmission in the 20 + 40 and 20 + 20 MHz channel, respectively.

The OFDM signals transmitted by different stations are asynchronous and, as such, not orthogonal at the 802.11ac station input. Although every 802.11a/n signal must meet the spectral mask requirements, the out-of-band power emission is still relatively high [9]. In practice, the signals transmitted in non-overlapping channels in UNII 5 GHz band do suffer from ACI. The ACI can be caused by one interferer (as in Fig. 2a, b), by two interferers (Fig. 2c) or even by three interferers as is illustrated in Fig. 2d.

Each transmitter uses a passband filter to reduce the out-of-band power emission, regarded as ACI at the receiver input. A conventional receiver passes only that part of the spectrum, which is occupied by the signal of interest, and cuts off the rest. This way, an interference coming from the adjacent channel cannot be eliminated. To reduce ACI, the transmitter may keep a few subcarriers (i.e. guard subcarriers) situated at both ends of the granted spectrum fragment, free from data at the cost of a reasonable throughput loss. Instead of such a rough solution to the ACI problem, we propose to alternatively use a receiver that can reject ACI by means of successive interference cancellation (SIC) [6–8].

Wilus Institute of Standards and Technology Inc.,
Ex. 2017, IPR2025-01111
Page 3 of 14

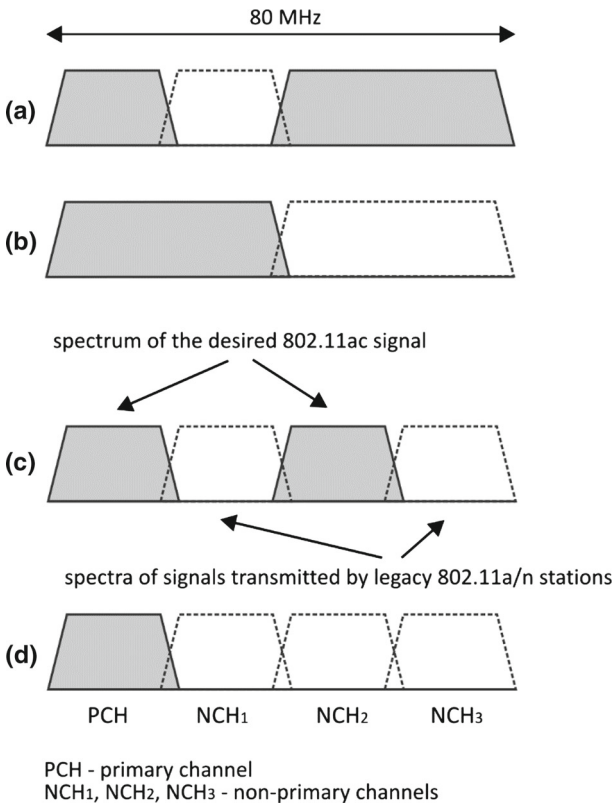

Fig. 2 Different channel assignment scenarios

3 Receiver Design

In the paper, we consider the 802.11ac station which is capable of communicating over the 80 MHz channel utilizing primary 20 MHz channel and any combination of non-primary 20 MHz channels. To enable dynamic 20/40/60/80 MHz channel access, the receiver is equipped with a few additional features in the physical layer to reject ACI.

The station receiver has one radio frequency (RF) module and one intermediate frequency (IF) module to down-convert the entire 80 MHz RF band to the baseband, as shown in Fig. 3. The entire 80 MHz signal is filtered and sampled by the A/D converter at 80 Msps. If the desired 802.11ac signal is 80 MHz wide (no legacy station 802.11a/n signal is transmitted), it is demodulated and decoded in a conventional way. Otherwise, the iterative SIC performs as described below.

Let us assume that one or two non-primary channels are occupied by one interfering 20 or 40 MHz legacy 802.11a/n station signal, as shown in Fig. 2a, b, respectively. In that case, the received signal $y(t)$ consists of the desired signal $s_1(t)$, the interfering signal $s_2(t)$, and noise $n(t)$, i.e. $y(t) = s_1(t) + s_2(t) + n(t)$.

Although the interfering signal transmitted by a legacy transmitter is conformant to the signal of interest, it is not synchronized with it. The lack of orthogonality causes a high level of ACI inside both channels adjacent to the interfering signal channel. To cancel the interfering

Wilus Institute of Standards and Technology Inc.,
Ex. 2017, IPR2025-01111
Page 4 of 14

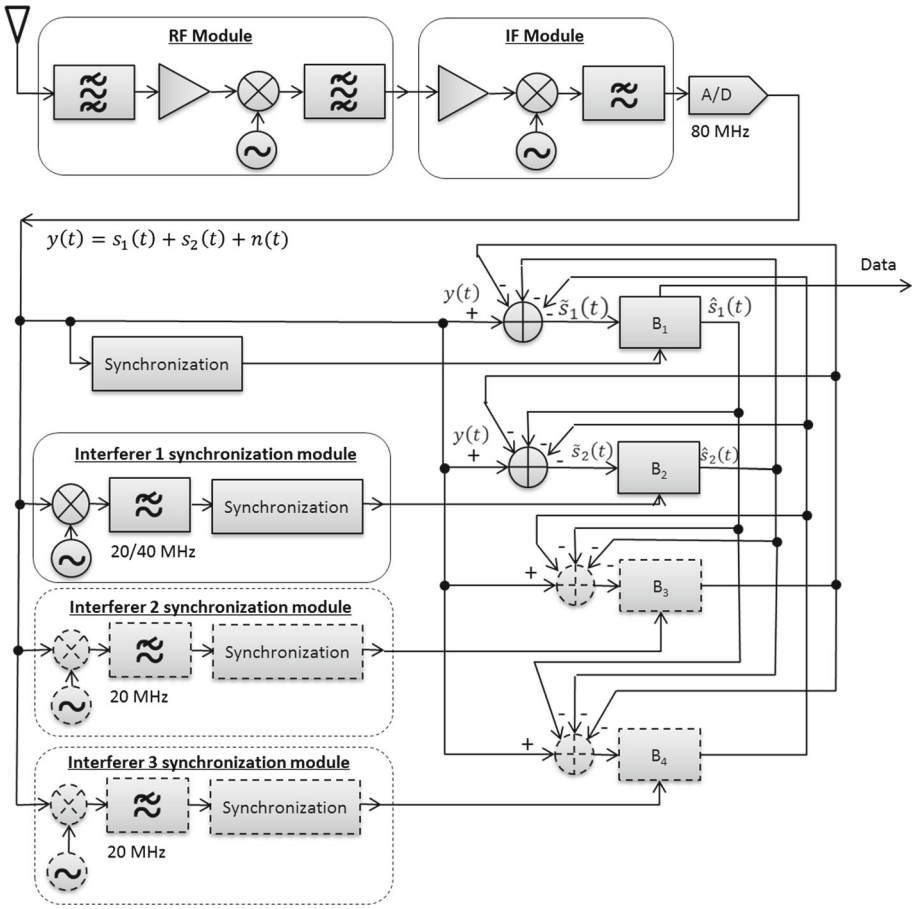

Fig. 3 Block scheme of the proposed 802.11ac receiver with iteration successive ACI rejection circuit

signal and remove ACI affecting the signal of interest, the proposed receiver uses the iterative SIC technique [6–8]. The receiver components for the signal $y(t)$ under consideration are drawn in Fig. 3 with a solid line.

The receiver can easily deal with the situation when there is more than one interfering signal overlapping the 80 MHz 802.11ac channel. In the case of one desired and two interfering signals (see Fig. 2c), block B_3 with a respective synchronization block must be activated. If the compound signal $y(t)$ consists of one desired and three interfering signals (see Fig. 2d), all blocks $B_1 - B_4$ and four synchronization blocks are necessary.

The iterative procedure in the case of one desired 802.11ac signal and one interfering 802.11a/n signal, stronger than the desired signal, runs as follows. The interferer 1 synchronization module retrieves (by conventional filtering) the interfering signal from the compound signal $y(t)$ to read its preamble, adjust timing and set proper modulation and coding mode in the respective demodulator/remodulator unit, denoted by B_2. In B_2, the subcarriers of the interfering signal are demodulated (by means of the Fast Fourier Transform—FFT). Then, the decisions on symbols carried by individual subcarriers are made (in the frequency domain) and such recovered symbols re-modulate the subcarriers (using the Inverse Fast

Springer

Fourier Transform—IFFT). A noiseless estimate $\hat{s}_2(t)$ of the interfering signal is subtracted from the compound signal $y(t)$ to give a noised estimate $\tilde{s}_1(t)$ of the desired signal, from which the ACI component has been erased to a certain extent. After that, the decisions on the symbols carried by the desired 802.11ac signal are made in block B1 (similarly to B2). Next, the resultant noiseless estimates $\hat{s}_1(t)$ of the desired 802.11ac signal are subtracted from $y(t)$ to provide block B2 with the noised estimate $\tilde{s}_2(t)$ of the interfering signal. In $\tilde{s}_2(t)$, the ACI component originating from the desired signal is partially suppressed. The "amount" of ACI remaining in $\tilde{s}_i(t), i = 1, 2$ decreases from one iteration to another.

The order in which individual receiver branches, dedicated for either desired or interfering signal recovery, operate depends on the probability of respective signals to be correctly recovered (a heuristic approach is to deal with the stronger one first). If there are more interfering signals, the recovery routine is performed for each of them, subsequently. To obtain the noised estimate $\tilde{s}_i(t)$ of the ith signal, the sum of noiseless estimates $\sum_{j \neq i} \hat{s}_j(t)$ is subtracted from the compound signal $y(t)$.

All parameters necessary for the proper operation of B_1 and B_2, i.e., channel state, modulation scheme, synchronization parameters, and symbol timing, are delivered by the synchronization blocks. As shown in [6–8], it is possible to completely remove the ACI after a few iterations, even for such a high-rate modulation as 256-QAM.

A conventional receiver, which passes the signal of interest through a lowpass filter, cannot remove the ACI affecting the signal. Therefore, if the adjacent channel is occupied by a strong interfering signal, the signal to interference and noise ratio (SINR) is low and the physical layer transmission rate must be substantially reduced to keep the bit error rate (BER) at the level of demand. The receiver proposed in this paper eliminates this disadvantage for the 802.11ac signal, since it is able to completely remove the adjacent channel interfering signal from the received 802.11ac signal [7]. Even in the presence of a strong signal in the adjacent channel, the ACI canceller will keep a high SINR of the decoded signal. As a result, the 802.11ac system with the proposed receiver can use a modulation rate higher than systems with a conventional receiver.

4 Simulation Results

The performance of the proposed channel access scheme is evaluated by computer simulation using C++. In the simulation, we consider a wireless environment consisting of one 802.11ac network and three 802.11a networks. The 802.11ac network occupies an 80 MHz channel divided into four 20 MHz channels, one of which is the primary channel (PCH), while the three others are non-primary channels (NCH_1, NCH_2, NCH_3)—see Fig. 4. We assume that there is an 802.11a network operating in each non-primary channel. Since the main focus of this paper is to study the influence of legacy 802.11a networks on the throughput of an 802.11ac network, we are not concerned with contention in networks. Therefore, we assume that the 802.11ac network and each of the 802.11a networks consists of one access point and one station. Data are sent from stations to access points.

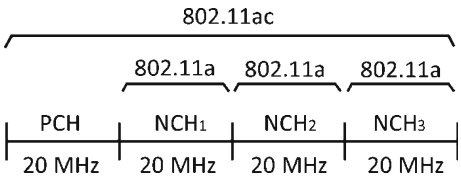

Fig. 4 Channel assignment in the simulation

Wilus Institute of Standards and Technology Inc.,
Ex. 2017, IPR2025-01111
Page 6 of 14

We study three 80 MHz channel access methods implemented in an 802.11ac network:

- *80 MHz channel access method*: Static 80 MHz bandwidth channel access [1], in which an 802.11ac station transmits only in an 80 MHz channel (all four 20 MHz channels must be idle),
- *20/40/80 MHz channel access method*: Dynamic bandwidth channel access [1], in which the 802.11ac station can transmit in a primary 20 MHz channel (PCH), in a 40 MHz channel (PCH, NCH_1), or in an 80 MHz channel (PCH, NCH_1, NCH_2, NCH_3),
- *20/40/60/80 MHz channel access method*: Dynamic bandwidth channel access proposed in this paper, in which an 802.11ac station can transmit in the primary 20 MHz channel and in all concurrently idle non-primary 20 MHz channels.

The static 80 MHz mode and the dynamic 20/40/80 MHz mode, defined in [1] and analyzed in [5], require transmission in contiguous frequency segments, whereas the dynamic 20/40/60/80 MHz mode, proposed in this paper, also allows transmission in noncontiguous frequency segments.

Table 1 lists the amount of bandwidth obtained by the 802.11ac station for data transmission according to different access methods given the status of individual 20 MHz channels at the moment of channel access attempt. Contrary to the dynamic 20/40/80 MHz access method, the proposed 20/40/60/80 MHz method enables a station to take up a continuous 60 MHz wide fragment of the bandwidth in scenario No. 2. Furthermore, only the proposed 20/40/60/80 MHz channel access method lets the 802.11ac station handle the isolated parts of the 80 MHz channel appearing in scenarios No. 3, 5–7. All the 20 MHz channels that are unavailable for the 802.11ac station using the 20/40/80 MHz access method are highlighted as bold in Table 1.

The considered channel access methods can be compared in terms of average bandwidth taken by the 802.11ac station attempting channel access. The obtained average channel bandwidth is given in the last row of Table 1 for all channel access methods (it is assumed that each of the scenarios No. 1–8 is equiprobable).

Table 1 802.11ac station bandwidth availability in an 80 MHz channel

Scenario no.	Status of 20 MHz channels at the moment of channel access attempt (1—busy, 0—idle, x—non important)				Parts of 80 MHz channel obtained by the 802.11ac station for data transmission according to different channel access methods [MHz]		
	PCH	NCH_1	NCH_2	NCH_3	Static (80 MHz)	Dynamic (20/40/80 MHz)	Dynamic (20/40/60/80 MHz)
1	0	0	0	0	80	80	80
2	0	0	**0**	1	0	40	60
3	0	0	1	**0**	0	40	40 + 20
4	0	0	1	1	0	40	40
5	0	1	**0**	**0**	0	20	20 + 40
6	0	1	**0**	1	0	20	20 + 20
7	0	1	1	**0**	0	20	20 + 20
8	0	1	1	1	0	20	20
9	1	×	×	×	0	0	0
Avg. bandwidth obtained by the 802.11ac station during channel access attempt					10	35	50

Wilus Institute of Standards and Technology Inc.,
Ex. 2017, IPR2025-01111
Page 7 of 14

Table 2 802.11 network parameters used in the simulation

Parameter	Value	Parameter	Value
CW_{min}	15	T_{PRE}	16 µs
CW_{max}	1,023	T_{PRE_VHT}	36 µs
T_{slot}	9 µs	T_{SIG}	4 µs
T_{SIFS}	16 µs	T_S	4 µs
T_{PIFS}	25 µs	L_{MO}	36 bytes
T_{DIFS}	34 µs	L_{ACK}	14 bytes

Table 3 802.11ac parameters used in the simulation

Channel width (MHz)	Number of data subcarriers	Number of data bits per symbol (N_{DBPS})	PHY rate (Mb/s)	MPDU length (bytes)
20[a]	52	260	65	1,592.5
20 + 20	104	520	130	3,185
40[a]	108	540	135	3,307.5
20 + 40	160	800	200	4,900
60	170	850	212.5	5,206.25
80[a]	234	1,170	292.5	7,166.25

[a] Channel width specified in 802.11ac [1]

In the simulation, we assume that each 802.11a station generates a stream of MAC service data units (MSDUs) with an intensity ranging from 0 to 33 Mb/s. The MSDUs have the same length of 1,500 bytes and they are generated according to the Poisson arrival process. Data frames and ACK frames are transmitted with a PHY rate equal to 54 Mb/s (64 QAM, R = 3/4, $N_{DBPS} = 216$) and 24 Mb/s (16-QAM, R = 1/2, $N_{DBPS} = 96$), respectively. Table 2 contains 802.11 system parameters used in the simulation. The maximum throughput of the 802.11a network with one 802.11a station transmitting to the access point is approximately 30.5 Mb/s. This value is determined analytically in the appendix. It was also confirmed by the simulator, when 802.11a stations were operating in non-primary channels, while the 802.11ac station was inactive.

The 802.11ac station uses the MCS-7 mode (64-QAM, R = 5/6) and one spatial stream. The 802.11ac station always has data to be sent and it transmits MSDUs of variable length, depending on the width of the transmission channel. This length is chosen in such a way that the channel occupancy time for the 802.11ac station ($T_{DATA} + T_{SIFS} + T_{ACK}$) is similar to the channel occupancy time for the 802.11a station transmitting a 1,500-byte MSDU. Thus, the data frame is transmitted by the same number of OFDM symbols, regardless of the channel bandwidth. Table 3 lists the 802.11ac system parameters. Other simulation parameters are shown in Table 2. The maximum throughput of the 802.11ac network for an 80 MHz channel, calculated as described in appendix, is approximately 145.7 Mb/s. This value was also confirmed by the simulator, when the 802.11ac station was operating in the system, while 802.11a stations were inactive (see Fig. 5).

Figure 5 presents the average throughput of the 802.11ac station, the average aggregate throughput of 802.11a stations (the sum of three 802.11a networks operating in non-primary channels), and the total throughput in the 80 MHz channel, versus the intensity of traffic generated by 802.11a stations in non-primary channels, for the three studied channel access

Wilus Institute of Standards and Technology Inc.,
Ex. 2017, IPR2025-01111
Page 8 of 14

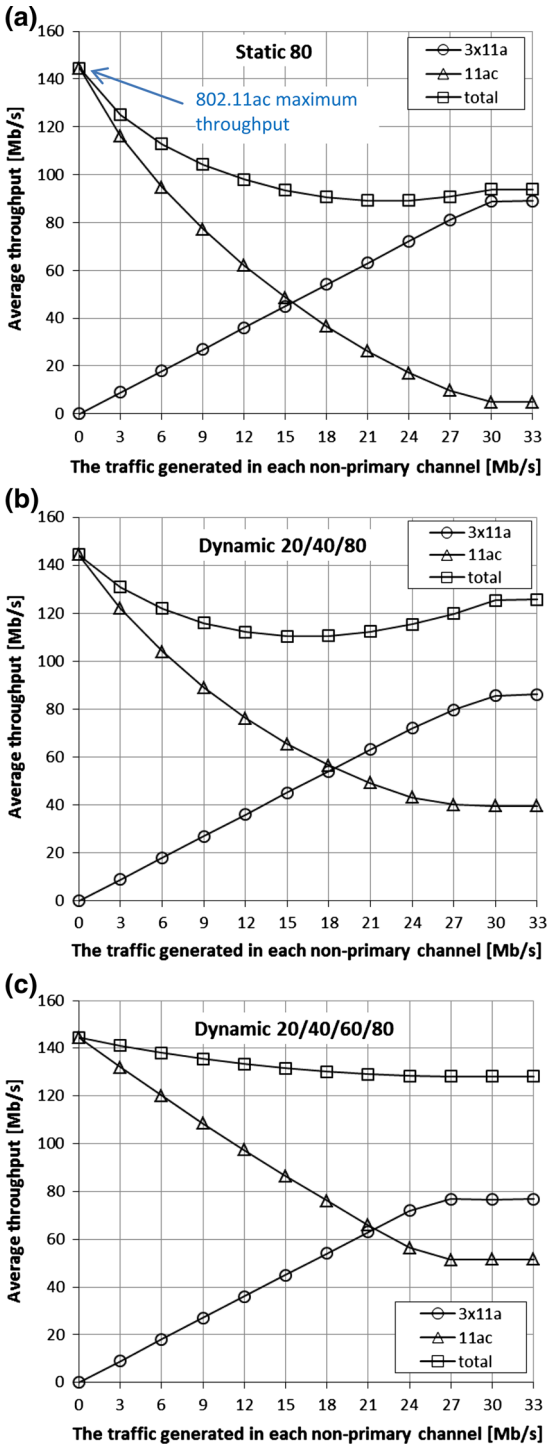

Fig. 5 The average throughput of an 802.11ac station and 802.11a stations: **a** static 80 MHz access, **b** dynamic 20/40/80 MHz access, **c** dynamic 20/40/60/80 MHz access

Wilus Institute of Standards and Technology Inc.,
Ex. 2017, IPR2025-01111
Page 9 of 14

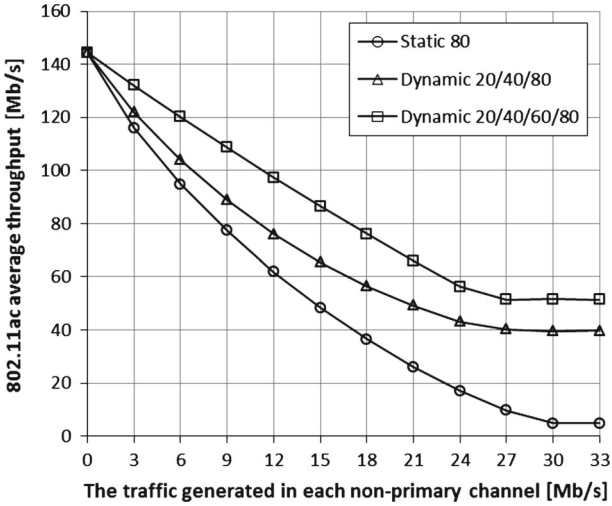

Fig. 6 The average throughput of an 802.11ac station for three studied channel access methods

methods. The average throughput of 802.11ac station decreases along with the increase in the traffic load in non-primary channels, for each method considered. It is worth noting that among the three studied methods, the 20/40/60/80 scheme gives the highest 80 MHz channel utilization, i.e., the total throughput in the 80 MHz channel for this method is the highest.

The comparison of the average throughput of the 802.11ac station for the three studied channel access methods is presented in Fig. 6. The lowest throughput of the 802.11ac station is achieved for the static 80 MHz method because with more data transmitted in non-primary channels, the 802.11ac station has less chance to occupy the entire 80 MHz channel. The dynamic bandwidth channel access methods give better results than static access method, because they allow the 802.11ac station to transmit data even if only some of the 20 MHz channels are idle. The throughput of the 20/40/60/80 channel access method is higher than the throughput of the 20/40/80 channel access method, since the former is more flexible and allows transmission in the 20 + 20, 20 + 40, and 60 MHz channels, not supported by the latter.

5 Conclusions

The results of the work indicate the opportunity for increasing the throughput of an 802.11ac network utilizing 80/160 MHz channels, in which legacy 802.11a/n networks may operate, at the same time. The dynamic channel access method proposed in the paper employs the CCA function specified in the IEEE 802.11ac amendment. Contrary to the 802.11ac specification, which only allows transmission in a restricted number of idle channel configurations, the proposed channel access method is more flexible, as it allows transmission in all idle channels.

The paper proposes a new receiver architecture based on the SIC method utilization [5–7]. Such a receiver has an additional advantage, i.e., it allows a higher speed of transmission, because ACI rejection from the inside of the desired signal improves the SINR in comparison to the receiver rejecting the unwanted signal by filtering, which does not reject the ACI at all.

The results shown in the paper concern 80 MHz channels. The benefits from the proposed channel access method applied in a 160 MHz 802.11ac network are expected to be even

Wilus Institute of Standards and Technology Inc.,
Ex. 2017, IPR2025-01111
Page 10 of 14

better than for the considered 80 MHz case, as the number of idle channel configurations not supported by the 802.11ac specification grows.

Acknowledgments This work has been supported by the Polish National Science Center under the research Grant No. 2011/01/B/ST7/06578.

Open Access This article is distributed under the terms of the Creative Commons Attribution License which permits any use, distribution, and reproduction in any medium, provided the original author(s) and the source are credited.

Appendix

To calculate the theoretical maximum throughput of 802.11a network operating in a 20 MHz channel, and consisting of one station and one access point, we assume that the station always has a packet to send to the access point, and the access point only accepts packets and provides acknowledgment. In such a condition, the maximum throughput is given by:

$$S = \frac{8L_{MSDU}}{T_{DCF}} \tag{1}$$

where L_{MSDU} is the length of the transmitted MSDU, in bytes, and T_{DCF} is the transmission cycle of the distributed coordination function (DCF), in seconds. T_{DCF} is expressed as follows (see Fig. 7):

$$T_{DCF} = T_{DIFS} + T_B + T_{DATA} + T_{SIFS} + T_{ACK} \tag{2}$$

where T_{DATA} and T_{ACK} is the transmission time of the DATA and ACK frames, respectively. T_{DIFS} and T_{SIFS} are the DIFS and SIFS durations, respectively. T_B is the average backoff time.

Since there are no collisions, the backoff period is always drawn from a uniform distribution over the interval [0, CW_{min}], thus the average backoff time is given by:

$$T_B = \frac{CW_{min}T_{slot}}{2} \tag{3}$$

where T_{slot} is the slot time, and CW_{min} is the minimum backoff window size.

The transmission times of the DATA and ACK frames are expressed as follows (see Fig. 8)

$$T_{DATA} = T_{PRE} + T_{SIG} + T_S \left\lceil \frac{16 + 6 + 8L_{MO} + 8L_{MSDU}}{N_{DBPS}} \right\rceil \tag{4}$$

$$T_{ACK} = T_{PRE} + T_{SIG} + T_S \left\lceil \frac{16 + 6 + 8L_{ACK}}{N_{DBPS}} \right\rceil \tag{5}$$

where $\lceil x \rceil$ is the smallest integer not less than x. T_{PRE} is the transmission time of the physical preamble, T_{SIG} is the transmission time of the SIGNAL field, T_S is the OFDM

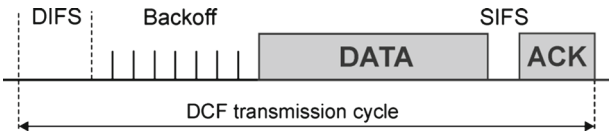

Fig. 7 DCF transmission cycle

Wilus Institute of Standards and Technology Inc.,
Ex. 2017, IPR2025-01111
Page 11 of 14

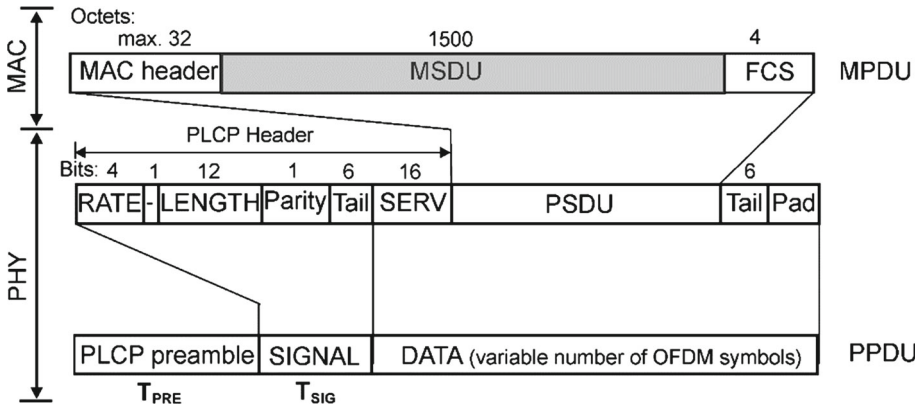

Fig. 8 MPDU and PPDU frame format of the IEEE 802.11a [10]

symbol duration, L_{MO} is the length (in bytes) of the MAC overhead (MAC header and FCS), and N_{DBPS} is the number of data bits per OFDM symbol.

By substituting (3)–(5) in (2), we obtain:

$$T_{DCF} = T_{DIFS} + \frac{CW_{min}T_{slot}}{2} + 2T_{PRE} + 2T_{SIG} + T_S\left\lceil\frac{22 + 8L_{MO} + 8L_{MSDU}}{N_{DBPS}}\right\rceil + T_{SIFS} + T_S\left\lceil\frac{22 + 8L_{ACK}}{N_{DBPS}}\right\rceil \tag{6}$$

Thus, the maximum throughput is given by:

$$S = \frac{8L_{MSDU}}{T_{DIFS} + \frac{CW_{min}T_{slot}}{2} + 2T_{PRE} + 2T_{SIG} + T_S\left\lceil\frac{22+8L_{MO}+8L_{MSDU}}{N_{DBPS}}\right\rceil + T_{SIFS} + T_S\left\lceil\frac{22+8L_{ACK}}{N_{DBPS}}\right\rceil} \tag{7}$$

Finally, for the parameters given in Sect. 4, the maximum throughput of an 802.11a network is given by:

$$S = \frac{8L_{MSDU}}{165.5 + 4\left\lceil\frac{310+8L_{MSDU}}{216}\right\rceil} \text{ [Mb/s]} \tag{8}$$

For MSDU length equal to 1,500 bytes, the maximum throughput equals 30.5 Mb/s.

The maximum throughput of an 802.11ac network operating in an 80 MHz channel can be calculated in a similar way. The only difference is the additional VHT preamble added to the DATA and ACK frames and a different N_{DBPS} parameter for the DATA frame. The maximum throughput of such an 802.11ac network for the parameters given in Sect. 4 is 145.7 Mb/s.

References

1. IEEE. (2013). IEEE standard for information technology: telecommunications and information exchange between systems—local and metropolitan area networks-specific requirements—part 11: wireless LAN medium access control (MAC) and physical layer (PHY) specifications—amendment 4: enhancements for very high throughput for operations in bands below 6 GHz.

Wilus Institute of Standards and Technology Inc.,
Ex. 2017, IPR2025-01111
Page 12 of 14

2. Cariou, L., & Christin, P. (2010). 80 and 160MHz channel access modes. http://mentor.ieee.org/802.11/dcn/10/11-10-0385-01-00ac-80mhz-160mhz-channel-access-modes.ppt. Accessed 22 April 2014.
3. Cariou, L, & Benko, J. (2010). Gains provided by multichannel transmissions. http://mentor.ieee.org/802.11/dcn/10/11-10-0103-01-00ac-gains-provided-by-multichanneltransmissions.ppt. Accessed 22 April 2014.
4. Cariou, L, & Benko, J. (2009). Multi-channel transmissions. http://mentor.ieee.org/802.11/dcn/09/11-09-1022-00-00ac-multi-channeltransmissions.ppt. Accessed 22 April 2014.
5. Park, M. (2011). IEEE 802.11ac: Dynamic bandwidth channel access. In *Proceedings of ICC*.
6. Szulakiewicz, P., Kotrys, R., Krasicki, M., Remlein, P., & Stelter, A. (2012). Iterative rejection of the adjacent channel interference for 802.11n WLANs. In *Proceedings of EW*.
7. Szulakiewicz, P., Kotrys, R., Krasicki, M., Remlein, P., & Stelter, A. (2012). OFDM interfering signal rejection from 802.11ac channel. In *Proceedings of PIMRC*.
8. Szulakiewicz, P., Kotrys, R., Krasicki, M., Remlein, P., & Stelter, A. (2011). A new functionality of 40-MHz IEEE 802.11n WLAN receiver. In *Proceedings of PWT*. http://www.pwt.et.put.poznan.pl/PWT_2011. Accessed 22 April 2014.
9. Tonello, A. M. (2003). Asynchronous multicarrier multiple access: optimal and sub-optimal detection and decoding. *Bell Labs Technical Journal*, *7*(3), 191–217.
10. IEEE. (2012). IEEE standard for information technology-telecommunications and information exchange between systems-local and metropolitan area networks-specific requirements part 11: Wireless LAN medium access control (MAC) and physical layer (PHY) specifications.

Andrzej Stelter received the M.Sc. and the Ph.D. degrees from Poznan University of Technology (PUT), Poznan, Poland in 1993 and 2000, respectively. He has been employed at PUT since 1993, currently as an Assistant Professor at the Chair of Wireless Communications. His research interests include medium access control protocols, cross-layer design, and quality of service in wireless networks.

Paweł Szulakiewicz has been with Poznan University of Technology since the year 1970. He is currently a Professor in the Chair of Wireless Communications and he holds a position of Dean of the Faculty of Electronics and Communications. In the academic years 1989/90 and 1990/91 he was with Polytechnic University in NY as Visiting Associate Professor, working on theory of telecommunications. His research interests are theory of telecommunications, wireless LANs, channel coding and data processing in transmitters and receivers. He is the member of *The Institute of Electrical and Electronics Engineers* (IEEE) Communications Society.

Springer

Robert Kotrys received his M.Sc. and Ph.D. degrees in Telecommunications from the Poznan University of Technology, Poland, in 1992 and 2001, respectively. Since 1992 he has been working in the Faculty of Electronics and Telecommunications, Poznan University of Technology, where he currently is an Assistant Professor. He is engaged in research and teaching in the area of telecommunication mobile systems and wireless networks, Internet and intranet technology and distance learning technique, tools and concepts. He has published several papers which have been published in communication journals and presented at national and international conferences. He participates in research grants funded by national authority as well as in several international projects funded by European Union.

Maciej Krasicki received his M.Sc. and Ph.D. degrees in Telecommunications from the Poznan University of Technology, Poland, in 2006 and 2010, respectively. Since 2006 he has been working in the Faculty of Electronics and Telecommunications, Poznan University of Technology, where he currently is an Assistant Professor. He is engaged in research and teaching in the area of telecommunication mobile systems and wireless networks. He is an author of more than 20 papers published in communication journals and presented at national and international conferences.

Piotr Remlein received the M.Sc. and the Ph.D. degrees from Poznan University of Technology (PUT), Poznan, Poland in 1991 and 2002 respectively. He has been employed at PUT since 1992, currently as an Assistant Professor at the Chair of Wireless Communications. His scientific interests cover wireless networks, communication theory, error control coding, cryptography, digital modulation, trellis coded modulation, continuous phase modulation, mobile communications, digital circuits design.

P. Remlein is the author of more than 70 papers, which have been presented at national and international conferences, and published in the communication journals. He also acts as a reviewer for international and national conference and journal papers. He is the member of *The Institute of Electrical and Electronics Engineers* (IEEE) Communications Society and IEEE Information Theory Society.

Wilus Institute of Standards and Technology Inc.,
Ex. 2017, IPR2025-01111
Page 14 of 14