US 20060005009A1

(19) United States

(12) Patent Application Publication

(10) Pub. No.: US 2006/0005009 A1

(43) Pub. Date: Jan. 5, 2006

Ball et al.

(54) METHOD, SYSTEM AND PROGRAM PRODUCT FOR VERIFYING AN ATTRIBUTE OF A COMPUTING DEVICE

(75) Inventors: **Charles D. Ball**, Raleigh, NC (US); **Ryan C. Catherman**, Raleigh, NC (US); **James P. Hoff**, Raleigh, NC (US); **James P. Ward**, Apex, NC (US)

Correspondence Address:
HOFFMAN, WARNICK & D'ALESSANDRO LLC
75 STATE ST
14 FL
ALBANY, NY 12207 (US)

(73) Assignee: **International Business Machines Corporation**, Armonk, NY (US)

(21) Appl. No.: 10/881,870

(22) Filed: Jun. 30, 2004

Publication Classification

(51) Int. Cl.
H04L 9/00 (2006.01)

(52) U.S. Cl. 713/155

(57) ABSTRACT

A solution for verifying an attribute of a computing device. In particular, a computing device can obtain an attribute from another computing device. The attribute can be measure by, for example, a Trusted Platform Module integrated on the other computing device. The computing device can then use an attestation server to determine whether the attribute reflects a desirable value or indicates that the other computing device may have been compromised.

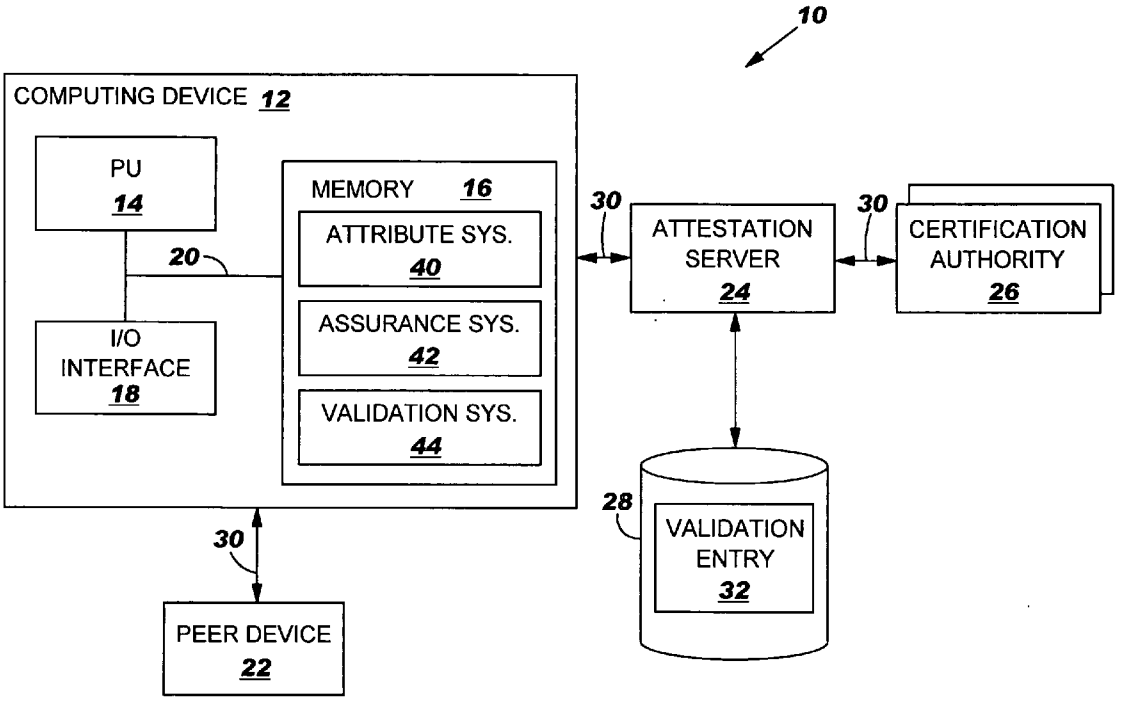

FIG. 1

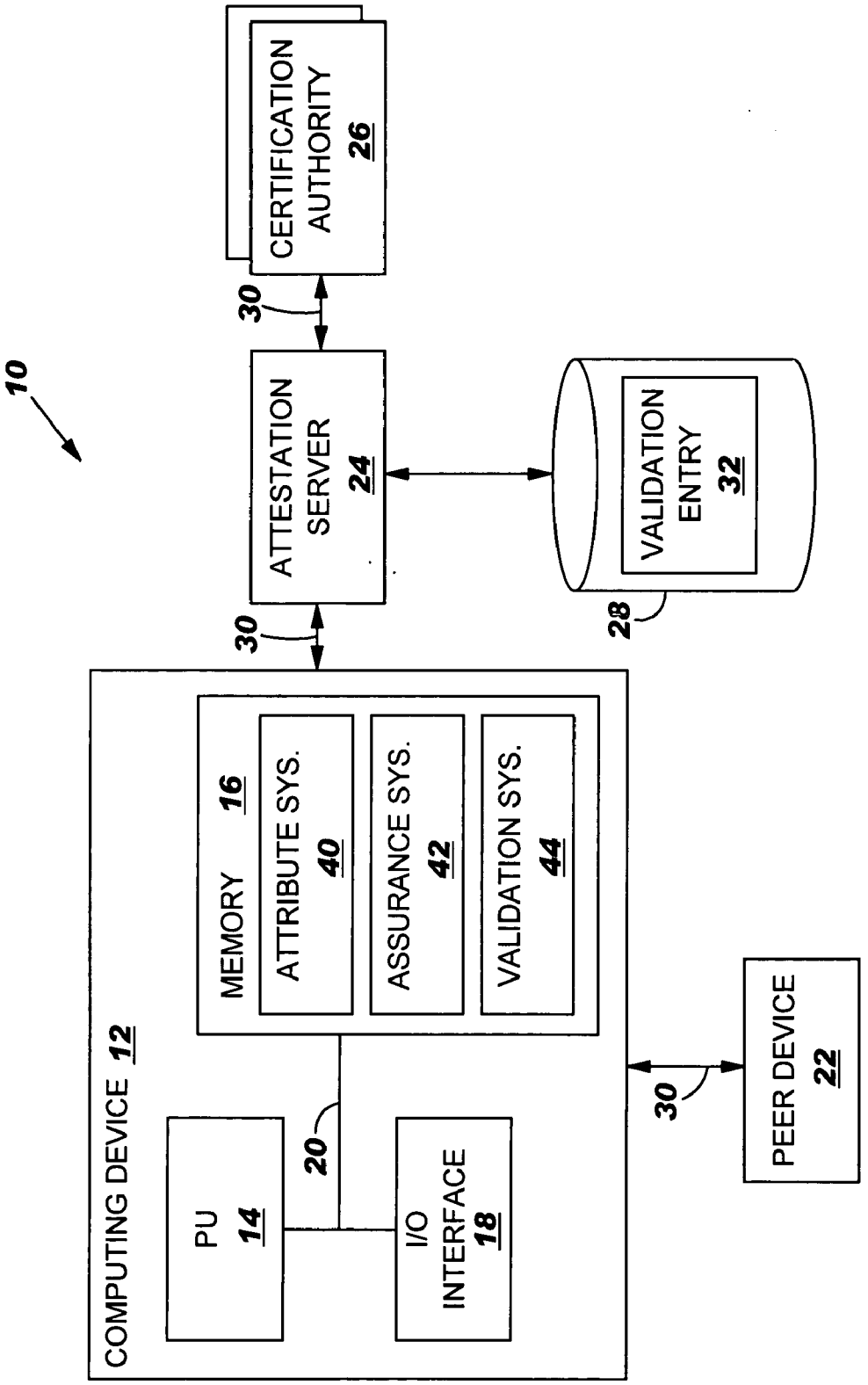
10
CERTIFICATION AUTHORITY 26
30
ATTESTATION SERVER 24
30
VALIDATION ENTRY 32
28
COMPUTING DEVICE 12
MEMORY 16
ATTRIBUTE SYS. 40
ASSURANCE SYS. 42
VALIDATION SYS. 44
PU 14
20
I/O INTERFACE 18
30
PEER DEVICE 22

FIG. 2

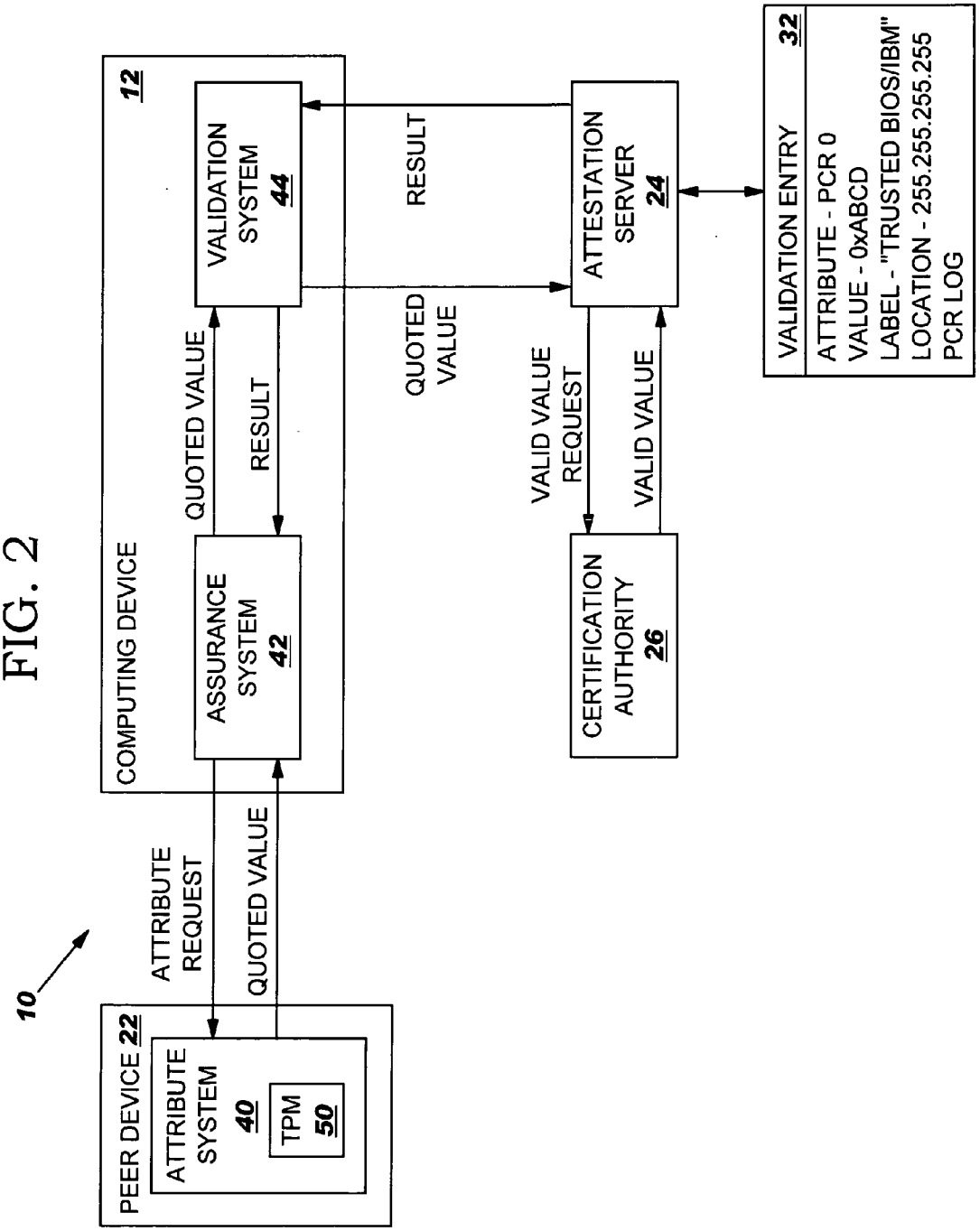
10
PEER DEVICE 22
ATTRIBUTE SYSTEM 40
TPM 50
ATTRIBUTE REQUEST
QUOTED VALUE
COMPUTING DEVICE 12
ASSURANCE SYSTEM 42
QUOTED VALUE
RESULT
VALIDATION SYSTEM 44
RESULT
QUOTED VALUE
ATTESTATION SERVER 24
VALID VALUE REQUEST
VALID VALUE
CERTIFICATION AUTHORITY 26
VALIDATION ENTRY 32
ATTRIBUTE - PCR 0
VALUE - 0xABCD
LABEL - "TRUSTED BIOS/IBM"
LOCATION - 255.255.255.255
PCR LOG

FIG. 3

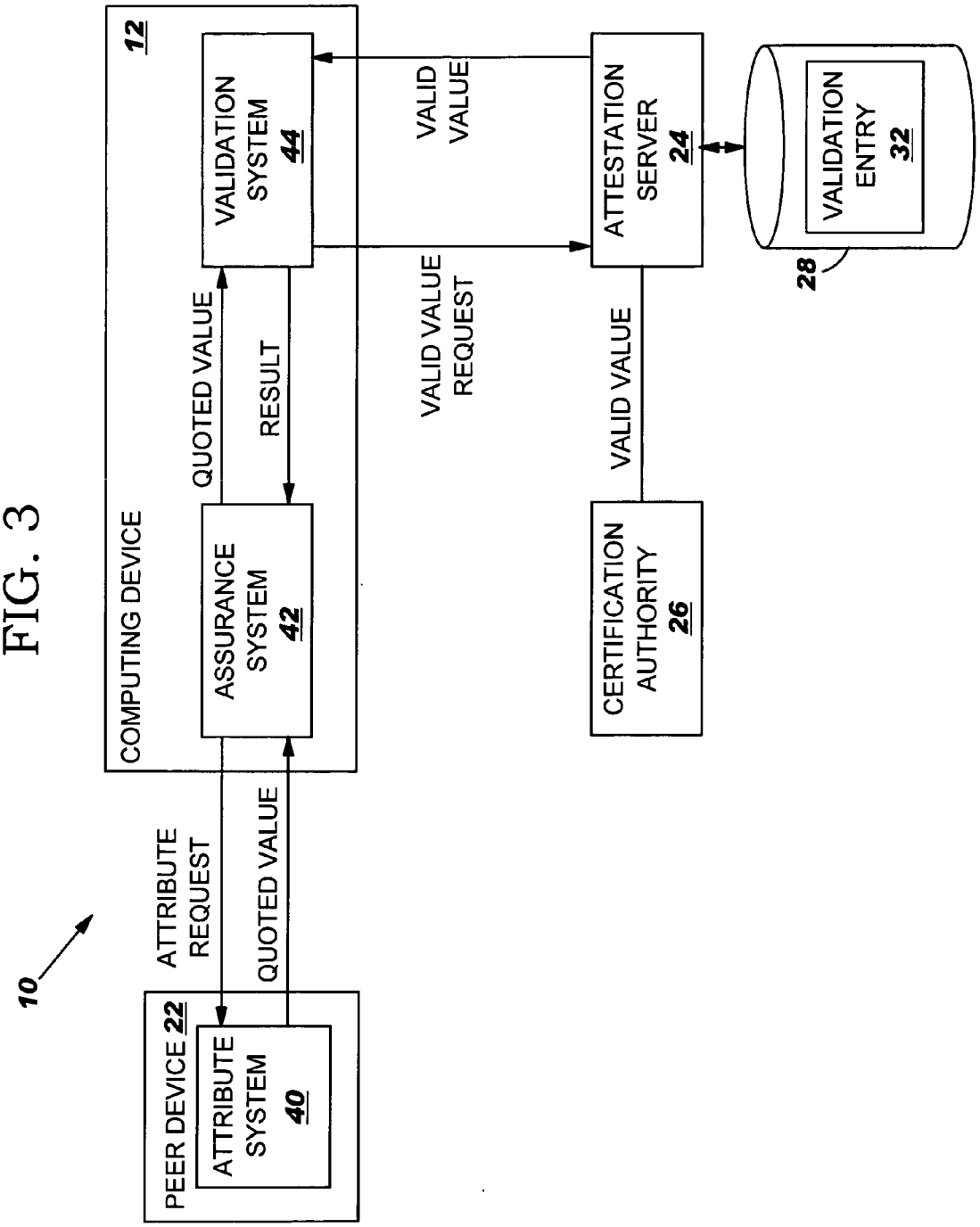
10
COMPUTING DEVICE
12
VALIDATION SYSTEM 44
ASSURANCE SYSTEM 42
QUOTED VALUE
RESULT
ATTRIBUTE REQUEST
QUOTED VALUE
PEER DEVICE 22
ATTRIBUTE SYSTEM 40
VALID VALUE
VALID VALUE REQUEST
ATTESTATION SERVER 24
VALID VALUE
CERTIFICATION AUTHORITY 26
VALIDATION ENTRY 32
28

FIG. 4

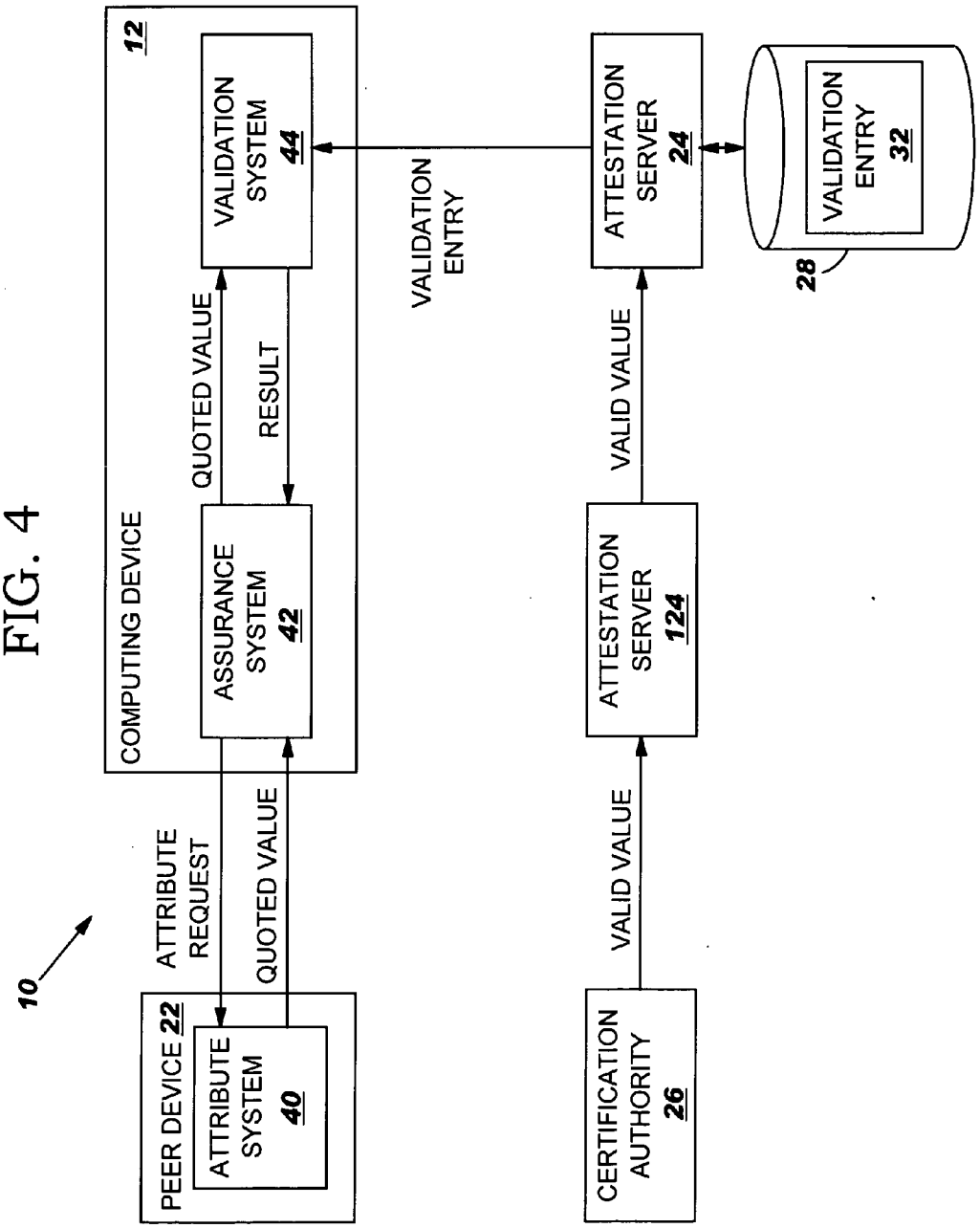
10
COMPUTING DEVICE
12
ASSURANCE SYSTEM 42
VALIDATION SYSTEM 44
QUOTED VALUE
RESULT
ATTRIBUTE REQUEST
QUOTED VALUE
PEER DEVICE 22
ATTRIBUTE SYSTEM 40
VALIDATION ENTRY
ATTESTATION SERVER 24
VALID VALUE
ATTESTATION SERVER 124
VALID VALUE
CERTIFICATION AUTHORITY 26
VALIDATION ENTRY 32
28

METHOD, SYSTEM AND PROGRAM PRODUCT FOR VERIFYING AN ATTRIBUTE OF A COMPUTING DEVICE

BACKGROUND OF THE INVENTION

[0001] 1. Technical Field

[0002] The invention relates generally to verifying an attribute of a computing device, and more particularly to verifying an attribute provided by the computing device which indicates that the computing device is a trusted device.

[0003] 2. Background Art

[0004] As business transactions and sensitive information are increasingly communicated over public computer networks such as the Internet, security concerns have also increased. As a result, these communications are frequently encrypted using a security protocol such as secure sockets layer (SSL) or the like to help ensure that the information is not intercepted during transmission. Further, many security protocols incorporate public/private keys that can be used to authenticate the identity of the computing device that is sending/receiving the encrypted information.

[0005] However, these security solutions remain insufficient for some applications. In particular, it may be desired to obtain some assurance that the computing device, such as a personal computer, mobile telephone, personal digital assistant (PDA), etc., has not been corrupted with a virus, accessed by an unauthorized user, or the like, i.e., that the computing device is a "trusted computer system." For example, a computing device may seek to obtain information on one or more attributes of another computing device such as its hardware configuration, firmware, operating system, services, applications, integrity metrics, etc. Using this information, the computing device can then make an informed decision as to whether the other computing device can be trusted.

[0006] As a result, a group of manufacturers have formed the Trusted Computing Group (TCG), which is seeking to define a specification that will enable a computing device to provide attribute information in a secure manner to another computing device. The specification, as currently defined, is described in detail in a document entitled "TCG Specification Architecture Overview," Rev. 1.2, 28 Apr. 2004, which is hereby incorporated herein by reference. In general, the specification calls for a computing device to be built with an integrated Trusted Platform Module (TPM). The TPM comprises a passive device that is installed in a computing device, and which can accurately measure, securely store, and securely communicate information on one or more attributes of the computing device. To this extent, the TPM can create an Attestation Identity Key (AIK) that is used to encrypt the attribute information and authenticate identification when the attribute information is communicated to another computing device. In this manner, the receiving computing device can be assured of the sender's identity as well as the accuracy of the attribute information that was communicated.

[0007] Once a computing device is confident that it has received accurate attribute information, it still may be necessary to determine the relevance of the attribute information, e.g., whether the attribute information makes the other computing device a "trusted computer system." In particular, the computing device may need to verify the attribute information with an appropriate certification authority (CA). However, there are potentially millions of attributes and thousands of CAs for various computing device attributes. As a result, it is not desirable to require that each computing device interact with each CA and/or store valid values for each attribute that may require verification.

[0008] To date, there is no infrastructure protocol for addressing the interaction between a computing device and an appropriate CA for verifying attribute information. In particular, an infrastructure protocol is required that enables a computing device that has received attribute information from another computing device to determine from a vendor, CA, or the like, whether the attribute information makes the other computing device a trusted computer system.

[0009] As a result, a need exists for a solution for verifying an attribute of a computing device. In particular, a need exists for a method, system and program product that verify whether a quoted value for the attribute is a valid value using an attestation server.

SUMMARY OF THE INVENTION

[0010] The invention provides a method, system and program product for verifying an attribute of a computing device. Specifically, under the present invention, a quoted value that defines the attribute can be obtained by another computing device and verified using an attestation server. The attestation server can store a set of validation entries that each include a valid value that has been verified by a certification authority for a corresponding attribute. Various configurations are possible for communications between the computing device, attestation server, and/or certification authority that propagate new valid values and/or compare a quoted value with known valid values.

[0011] A first aspect of the invention provides a method of verifying an attribute of a computing device, the method comprising: receiving a quoted value that defines the attribute from the computing device; obtaining a valid value from an attestation server, wherein the valid value has been verified by a certification authority; and comparing the quoted value to the valid value.

[0012] A second aspect of the invention provides a method of verifying an attribute of a first computing device, the method comprising: obtaining a valid value that has been verified by a certification authority; receiving a quoted value that defines the attribute from a second computing device; and comparing the quoted value to the valid value.

[0013] A third aspect of the invention provides a system for verifying an attribute of a computing device, the system comprising: an attestation server for storing a set of valid values, wherein each valid value has been certified by a certification authority; an assurance system for receiving an attestation identity key (AIK) and a quoted value from the computing device and verifying the quoted value using the AIK; and a validation system for validating the quoted value using the attestation server.

[0014] A fourth aspect of the invention provides a program product stored on a recordable medium for verifying an attribute of a computing device, which when executed comprises: program code for receiving a quoted value that

defines the attribute from the computing device; program code for obtaining a valid value from an attestation server, wherein the valid value has been verified by a certification authority; and program code for comparing the quoted value to the valid value.

[0015] A fifth aspect of the invention provides a system for deploying an application for verifying an attribute of a first computing device, the system comprising a computer infrastructure being operable to: obtain a valid value that has been verified by a certification authority; receive a quoted value that defines the attribute from a second computing device; compare the quoted value to the valid value; and provide a result of the comparison to the second computing device.

[0016] A sixth aspect of the invention provides computer software embodied in a propagated signal for verifying an attribute of a computing device, the computer software comprising instructions to cause a computer system to perform the following functions: receive an attestation identity key (AIK) and a quoted value from the computing device; verify the quoted value using the AIK; and validate the quoted value using an attestation server that comprises a set of valid values, wherein each valid value has been certified by a certification authority.

[0017] The illustrative aspects of the present invention are designed to solve the problems herein described and other problems not discussed, which are discoverable by a skilled artisan.

BRIEF DESCRIPTION OF THE DRAWINGS

[0018] These and other features of this invention will be more readily understood from the following detailed description of the various aspects of the invention taken in conjunction with the accompanying drawings that depict various embodiments of the invention, in which:

[0019] **FIG. 1** shows an illustrative system for verifying an attribute of a computing device;

[0020] **FIG. 2** shows an illustrative data flow diagram for the system shown in **FIG. 1** according to one embodiment of the invention;

[0021] **FIG. 3** shows an illustrative data flow diagram for the system shown in **FIG. 1** according to another embodiment of the invention; and

[0022] **FIG. 4** shows an illustrative data flow diagram for the system shown in **FIG. 1** according to still another embodiment of the invention.

[0023] It is noted that the drawings of the invention are not to scale. The drawings are intended to depict only typical aspects of the invention, and therefore should not be considered as limiting the scope of the invention. In the drawings, like numbering represents like elements between the drawings.

DETAILED DESCRIPTION OF THE INVENTION

[0024] As indicated above, the invention provides a method, system and program product for verifying an attribute of a computing device. Specifically, under the present invention, a quoted value that defines the attribute can be obtained by another computing device and verified using an attestation server. The attestation server can store a set of validation entries that each include a valid value that has been verified by a certification authority for a corresponding attribute. Various configurations are possible for communications between the computing device, attestation server, and/or certification authority that propagate new valid values and/or compare a quoted value with known valid values.

[0025] Turning to the drawings, **FIG. 1** shows an illustrative system **10** for verifying an attribute of a computing device, e.g., peer device **22**. In particular, computing device **12** can obtain an attribute from peer device **22**. Computing device **12** can use attestation server **24** to determine the relevance of the attribute. Attestation server **24** can communicate with a certification authority **26** to obtain valid value(s) for the attribute, and attestation server **24** can store the valid values in a set (one or more) of validation entries **32**. The set of validation entries **32** can be used to verify the attribute of peer device **22**.

[0026] As shown, communications between computing device **12**, peer device **22**, attestation server **24**, and/or certification authority **26** can occur over one or more networks **30**. To this extent, each network **30** can comprise any type of communications link. For example, network **30** can comprise an addressable connection in a client-server (or server-server) environment that may utilize any combination of wireline and/or wireless transmission methods. In this instance, computing device **12**, peer device **22**, attestation server **24**, and/or certification authority **26** may utilize conventional network connectivity, such as Token Ring, Ethernet, WiFi or other conventional communications standards. Further, network **30** can comprise any type of network, including the Internet, a wide area network (WAN), a local area network (LAN), a virtual private network (VPN), etc. Where network **30** comprises the Internet, connectivity could be provided by conventional TCP/IP sockets-based protocol, and a computer system, e.g., computing device **12** could utilize an Internet service provider to establish connectivity.

[0027] As shown, computing device **12** generally includes a processing unit (PU) **14**, a memory **16**, an input/output (I/O) interface **18**, and a bus **20**. As is known in the art, PU **14** uses bus **20** to access computer program code stored in memory **16** and process and/or generate data that is stored in memory **16** and/or input/output using I/O interface **18**. To this extent, PU **14** may comprise a single processing unit, or be distributed across one or more processing units in one or more locations, e.g., on a client and server. Memory **16** may comprise any known type of data storage and/or transmission media, including magnetic media, optical media, random access memory (RAM), read-only memory (ROM), a data cache, a data object, etc. I/O interface **18** may comprise any system for exchanging information to/from one or more other computing devices (e.g., peer device **22**) and/or one or more users (not shown). Bus **20** provides a communication link between each of the components in computing device **12** and likewise may comprise any known type of transmission link, including electrical, optical, wireless, etc. In addition, although not shown, additional components, such as system software, may be incorporated into computing device **12** as are known in the art.

[0028] Further, attestation server **24** is also shown in communication with a storage unit **28**, which may comprise any type of data storage for providing storage for information, e.g., set of validation entries **32**, necessary to carry out the invention as described herein. As such, storage unit **28** may include one or more storage devices, such as a magnetic disk drive or an optical disk drive. Moreover, similar to PU **14**, memory **16** and/or storage unit **28** may reside at a single physical location, comprising one or more types of data storage, or be distributed across a plurality of physical systems in various forms. Further, memory **16** and/or storage unit **28** can include data distributed across, for example, a LAN, WAN or a storage area network (SAN) (not shown).

[0029] It is understood that computing device **12** comprises any type of computer system capable of communicating with one or more other computing devices (e.g., attestation server **24**). Similarly, peer device **22**, attestation server **24**, and certification authority **26** each can comprise any type of computer system, such as a server, a desktop computer, a laptop, a handheld device, a mobile phone, a pager, a personal data assistant, etc. To this extent, peer device **22**, attestation server **24**, and certification authority **26** typically include the sane elements as shown in computing device **12** (e.g., PU, memory, I/O interface, etc.). These have not been separately shown and discussed for brevity.

[0030] Computing device **12** is shown including various systems stored in memory **16** as computer program code. In general, attribute system **40** can obtain and communicate one or more attributes of computing device **12** to another computing device, e.g., peer device **22**. To this extent, it is understood that all or a portion of attribute system **40** could be implemented as hardware such as a Trusted Platform Module (TPM) as described above. Assurance system **42** can communicate with another computing device, such as peer device **22**, and obtain one or more attributes therefrom. Validation system **44** can verify a received attribute using attestation server **24**. It is understood that some of the various systems shown in **FIG. 1** can be implemented independently, combined, and/or stored in memory for one or more separate computing devices **12** that communicate over a network. Further, it is understood that some of the systems and/or functionality may not be implemented, or additional systems and/or functionality may be included as part of system **10**.

[0031] In general, computing device **12** obtains an attribute from peer device **22** and verifies the attribute using attestation server **24**. As used herein, an "attribute" can comprise any aspect of peer device **22** that another computing device (e.g., computing device **12**) may desire to know. To this extent, the attribute may reflect the operational state of peer device **22**, and could comprise any software configuration, hardware configuration, event, and/or any combination thereof. For example, the attribute could comprise a particular type and/or version of a basic input output system (BIOS), an operating system, application, or the like. Further, the attribute could comprise security measures in place for peer device **22**, processor and/or memory configuration, etc. Still further, the attribute could comprise events such as a login/logout, a failed login, a virus detection, etc.

[0032] In any event, an application (not shown) on computing device **12** may desire to perform a transaction with peer device **22** (e.g., electronic funds transfer). In this case, the application may desire to obtain some assurance that peer device **22** can be trusted. As a result, the application can initiate assurance system **42** to determine if peer device **22** can be trusted. **FIG. 2** shows an illustrative data flow diagram for system **10** according to one embodiment of the invention. Initially, as shown, assurance system **42** on computing device **12** can generate an attribute request that is communicated to peer device **22**. Peer device **22** also can comprise an attribute system **40** that processes the attribute request and returns a quoted value that defines the requested attribute to assurance system **42** of computing device **12**.

[0033] In one embodiment, attribute system **40** comprises a TPM **50**. As discussed above, TPM **50** can accurately determine and communicate a quoted value that defines a desired attribute. For example, TPM **50** can measure various measurement events for peer system **22** and store a sequence of related measurement values in one or more Platform Configuration Registers (PCRs). One or more PCR values can be requested and communicated as the quoted value to assurance system **42**. To ensure that the quoted value is not corrupted during communication, TPM **50** also can generate an attestation identity key (AIK) that is used to encrypt some or all of the quoted value. Attribute system **40** can communicate the encrypted quoted value and AIK to assurance system **42**.

[0034] After receiving the quoted value and AIK from attribute system **40** (peer device **22**), assurance system **42** can verify an accuracy of the quoted value using the AIK. In particular, as is known in the art, assurance system **42** can decrypt the quoted value using the AIK. Further, attribute system **40** at peer device **22** can provide credentials to assurance system **42** that vouch for the accuracy of the quoted value, e.g., the validity of TPM **50**. Assurance system **42** can then verify the credentials, AIK, etc., to ensure that the quoted value comprises an accurate measurement of the requested attribute of peer device **22**.

[0035] Once assurance system **42** trusts the accuracy of the quoted value, computing device **12** must determine if the quoted value means that peer device **22** can be trusted. In other words, computing device **12** must determine if the quoted value comprises a desirable value (e.g., proper operating system type/version), or if the quoted value indicates that peer device **22** may have been compromised by a virus, unauthorized user, or the like. This may comprise a formidable task due to potentially millions of valid measurements. As a result, validation system **44** can validate the quoted value using attestation server **24**.

[0036] Attestation server **24** can manage a set of validation entries **32**. Each validation entry **32** can comprise, for example, a valid value, a label, and/or a location of a source certification authority **26**. In general, the valid value has been generated/verified by certification authority **26**, which represents that the valid value comprises a known valid measurement of a particular attribute. The label within validation entry **32** can comprise a text string that describes the valid value, e.g., the attribute measured, identification of certification authority **26**, etc., and the location can comprise a network address that enables communication with certification authority **26**, if desired. It is understood that validation entry **32** is only illustrative, and numerous configurations for validation entry **32** that may contain more/less information in varying formats are possible.

[0037] In any event, validation system **44** validates the quoted value using attestation server **24**. In one embodiment, validation system **44** can provide the quoted value to attestation server **24**, and receive a result that indicates whether the quoted value comprises a valid value. In this case, attestation server **24** can compare the quoted value with the set of validation entries **32** to determine if one or more of the valid values for the corresponding attribute matches the quoted value. If so, attestation server **24** can return a result indicating that the quoted value comprises a valid value. Further, the result could comprise some or all of the validation entry **32** that was used to verify the quoted value, e.g., the location of certification authority **26**.

[0038] However, when the quoted value does not match any validation entry **32**, attestation server **24** can return a result indicating that the quoted value could not be validated. In this case, validation system **44** can provide the quoted value to another attestation server **24** and/or certification authority **26** to attempt to validate the quoted value. Should validation fail for each attestation server **24** and/or certification authority **26**, validation system **44** can return a result to assurance system **42** indicating that the quoted value could not be validated. In this case, assurance system **42** could attempt to validate another attribute of peer device **22**, indicate to a calling application that the attribute could not be verified, etc. The application can then determine whether to trust peer device **22**.

[0039] Various alternatives for validating a quoted value using attestation server **24** are possible. For example, **FIG. 3** shows an alternative data flow diagram for system **10** in which validation system **44** sends a valid value request to attestation server **24** and receives one or more valid values based on the request. For example, validation system **44** can receive a quoted value for the attribute "PCR 0" from assurance system **42**. In this case, validation system **44** can request valid value(s) from attestation server **24** for the attribute "PCR 0." Attestation server **24** can obtain all validation entries **32** corresponding to "PCR 0" and provide the valid values and/or validation entries **32** to validation system **44**. Validation system **44** can then compare the quoted value to the set of valid values received from attestation server **24** and return a result to assurance system **42**.

[0040] Validation system **44** can store valid values received from attestation server **24** at computing device **12**. In one embodiment, validation system **44** can receive validation entries **32** from attestation server **24** and store them locally. In any event, when a quoted value is received from assurance system **42**, validation system **44** can first determine if a corresponding valid value is stored at computing device **12** before querying attestation server **24** for any valid values. Attestation server **24** can provide a set of valid values to validation system **44** in response to a request from validation system **44** or periodically. For example, attestation server **24** may receive a new valid value for a particular attribute from certification authority **26** and automatically forward it to validation system **44**.

[0041] Further, validation system **44** may periodically (e.g., once a day) request valid values for the particular attribute in order to maintain a relatively current local set of valid values. In response, attestation server **24** can provide the set of valid values (or validation entries **32**) for the attribute to validation system **44**. Alternatively, as shown in **FIG. 4**, attestation server **24** can periodically "push" newly created validation entries **32** to validation system **44** without having received any request from validation system **44**. In this case, all validation entries **32** can be provided to validation system **44**, or a subset of validation entries **32** that correspond to a particular attribute can be provided to validation system **44**.

[0042] As noted previously, attestation server **24** maintains a set of validation entries **32** that each comprise a valid value that has been verified by certification authority **26**. Several solutions for updating set of validation entries **32** with new and/or revised valid values are possible. For example, as shown in **FIG. 2**, attestation server **24** could send a valid value request to certification authority **26** in response to a quoted value received from validation system **44** that has no corresponding validation entry **32**. In response, attestation server **24** can receive one or more valid values from certification authority **26**. A validation entry **32** for each received valid value can then be generated and stored in storage unit **28** (**FIG. 1**).

[0043] Alternatively, as shown in **FIG. 3**, certification authority **26** can periodically send one or more new valid values to attestation server **24**. For example, certification authority **26** could comprise a software vendor that has released a new version of a software product. As a result of the release, additional valid values for the software product are generated by certification authority **26**. In this case, certification authority **26** can propagate the new valid values to one or more attestation servers **24** for use when verifying attributes of peer devices **22**.

[0044] Still further, as shown in **FIG. 4**, new valid values can be propagated using a scalable architecture. For example, an architecture similar to the domain name system (DNS) can be used to propagate new valid values/validation entries **32**. In this case, a certification authority **26** can propagate a new valid value to a few attestation servers **124** that subsequently propagate the new valid value to other attestation servers **24**. In one embodiment, attestation servers **24** propagate new valid values in a hierarchical fashion. In any event, the new valid values can be pushed to the attestation servers **24**, as shown in **FIG. 4**, or provided in response to a request from an attestation server **24** as shown in **FIG. 3**. In either case, new valid values can be efficiently and scaleably propagated to attestation servers **24** for use in verifying attributes.

[0045] As noted previously, it is important that computing device **12** receive a quoted value from peer device **22** that comprises an accurate measurement of the attribute. Similarly, computing device **12** must also receive accurate valid values from attestation server **24**, and attestation server **24** must receive accurate valid values from certification authority **26** and/or another attestation server **124** (**FIG. 4**). To this extent, communications between the various computer systems of system **10** can be encrypted using, for example, the public key infrastructure (PKI) or the like.

[0046] Returning to **FIG. 2**, as discussed above, one embodiment of the invention uses quoted values that comprise one or more PCR values. As is known, TPM **50** can update each PCR value by combining (e.g., hashing) a newly extended value with a previous PCR value. Each extended value is related to an event that occured on peer device **22**.

As a result, using a PCR value, it can be confirmed that a series of events has occured in a desired order on peer device **22**. However, one or more additional events may occur on peer device **22**, thereby altering the PCR value. As a result, the actual PCR value may not reflect the valid value stored in validation entry **32**, even though all the specified events have occured.

[**0047**] To address this situation, the quoted value can further comprise a peer PCR log for each PCR value. The peer PCR log can comprise a series of extended values (and therefore events) that were used to generate the PCR value. When determining whether the PCR value comprises a valid value, the peer PCR log can be used to confirm that each relevant extended value (event) was logged in a proper sequence by TPM **50**. In particular, when the PCR value does not match the valid value, the peer PCR log can be compared to a valid PCR log stored in validation entry **32**. If each extended value stored in the valid PCR log is present in the peer PCR log, then the quoted value could comprise a valid value.

[**0048**] It is understood that various alternative solutions are possible for determining whether the quoted value comprises a valid value using the peer PCR log. For example, it may be specified that no additional events occur on peer device **22**, that one or more of the events occur without an intervening event, that one or more specific events not have occured, that one or more events can occur in any order, etc. In any case, use of the peer PCR log and the valid PCR log enables fewer validation entries **32** to be used to store valid values for each PCR. It is also understood that while **FIG. 2** shows the comparison of the quoted value and valid value as occuring on attestation server **24**, similar data can be used when the comparison is performed by validation system **44**. In this case, attestation server **24** can provide one or more validation entries **32** to computing device **12** for use in comparing a quoted value with a valid value.

[**0049**] While the discussion is generally limited to interactions between a single computing device **12** and a single attestation server **24**, it is understood that each computing device **12** could have a plurality of attestation servers **24** that it trusts to verify attributes. To this extent, each attestation server **24** could be serially queried when attempting to verify a quoted value, or multiple attestation servers **24** could be concurrently queried and the corresponding results compared. Based on the results, computing device **12** can determine whether to trust peer device **22** or not. Similarly, it is understood that a plurality of certification authorities **26** may exist that generate and/or provide valid values for use in verifying attributes.

[**0050**] The current invention can be implemented over a public network **30 (FIG. 1)** such as the Internet or an intra net for a company. In the latter case, the certification authority **26** could comprise a system manager of the company that has set up various computing devices **12** in the company in a particular manner (e.g., operating system, software configuration, BIOS, etc.). When multiple computing devices **12** seek to communicate, they can first verify the configurations in order to help prevent the spread of a virus or the like over the company's intra net.

[**0051**] Still yet, it should be appreciated that the teachings of the present invention could be offered as a business method on a subscription or fee basis. For example, attestation server **24** could be created, maintained and/or deployed by a service provider that offers the functions described herein for customers. That is, a service provider could offer to verify attributes for a customer as described above. It is understood that the present invention can be realized in hardware, software, a propagated signal, or any combination thereof. Any kind of computer/server system(s)—or other apparatus adapted for carrying out the methods described herein—is suited. A typical combination of hardware and software could be a general purpose computer system with a computer program that, when loaded and executed, carries out the respective methods described herein. Alternatively, a specific use computer, containing specialized hardware for carrying out one or more of the functional tasks of the invention, could be utilized.

[**0052**] The present invention can also be embedded in a computer program product or a propagated signal, which comprises all the respective features enabling the implementation of the methods described herein, and which—when loaded in a computer system—is able to carry out these methods. Computer program, propagated signal, software program, program, or software, in the present context mean any expression, in any language, code or notation, of a set of instructions intended to cause a system having an information processing capability to perform a particular function either directly or after either or both of the following: (a) conversion to another language, code or notation; and/or (b) reproduction in a different material form.

[**0053**] The foregoing description of various aspects of the invention has been presented for purposes of illustration and description. It is not intended to be exhaustive or to limit the invention to the precise form disclosed, and obviously, many modifications and variations are possible. Such modifications and variations that may be apparent to a person skilled in the art are intended to be included within the scope of the invention as defined by the accompanying claims.

1. A method of verifying an attribute of a computing device, the method comprising:

receiving a quoted value that defines the attribute from the computing device;

obtaining a valid value from an attestation server, wherein the valid value has been verified by a certification authority; and

comparing the quoted value to the valid value.

2. The method of claim 1, further comprising:

receiving an attestation identity key (AIK) from the computing device; and

verifying an accuracy of the quoted value using the AIK.

3. The method of claim 1, further comprising receiving a validation entry from the attestation server, wherein the validation entry includes the valid value and a location for a source certification authority.

4. The method of claim 1, further comprising querying the attestation server for the valid value based on the quoted value.

5. The method of claim 1, wherein the obtaining step comprises periodically receiving a set of valid values from the attestation server.

6. The method of claim 1, wherein the quoted value comprises a PCR value and a peer PCR log, and wherein the comparing step comprises comparing a valid PCR log with the peer PCR log.

7. A method of verifying an attribute of a first computing device, the method comprising:

obtaining a valid value that has been verified by a certification authority;

receiving a quoted value that defines the attribute from a second computing device; and

comparing the quoted value to the valid value.

8. The method of claim 7, wherein the obtaining step comprises periodically receiving a set of valid values from at least one of the certification authority and an attestation server.

9. The method of claim 7, further comprising providing the second computing device with a result of the comparing step.

10. The method of claim 7, further comprising storing the valid value in a validation entry that includes a location of the certification authority.

11. The method of claim 10, further comprising providing the second computing device with the location of the certification authority.

12. The method of claim 7, further comprising:

receiving an attestation identity key (AIK) and the quoted value from the first computing device at the second computing device; and

verifying an accuracy of the quoted value using the AIK.

13. The method of claim 7, wherein the quoted value comprises a PCR value and a peer PCR log, and wherein the comparing step comprises comparing a valid PCR log with the peer PCR log.

14. A system for verifying an attribute of a computing device, the system comprising:

an attestation server for storing a set of valid values, wherein each valid value has been certified by a certification authority;

an assurance system for receiving an attestation identity key (AIK) and a quoted value from the computing device and verifying the quoted value using the AIK; and

a validation system for validating the quoted value using the attestation server.

15. The system of claim 14, wherein the validation system obtains a valid value from the attestation server based on the quoted value.

16. The system of claim 14, wherein the validation system provides the quoted value to the attestation server for validation.

17. The system of claim 14, wherein the attestation server periodically receives a set of new valid values from at least one of another attestation server and the certification authority.

18. A program product stored on a recordable medium for verifying an attribute of a computing device, which when executed comprises:

program code for receiving a quoted value that defines the attribute from the computing device;

program code for obtaining a valid value from an attestation server, wherein the valid value has been verified by a certification authority; and

program code for comparing the quoted value to the valid value.

19. The program product of claim 18, further comprising:

program code for receiving an attestation identity key (AIK) from the computing device; and

program code for verifying an accuracy of the quoted value using the AIK.

20. The program product of claim 18, wherein the program code for obtaining includes:

program code for periodically receiving a set of validation entries from the attestation server; and

program code for verifying an accuracy of the set of validation entries, wherein each validation entry includes a valid value for an attribute.

21. The program product of claim 18, further comprising program code for querying the attestation server for the valid value based on the quoted value.

22. A system for deploying an application for verifying an attribute of a first computing device, the system comprising a computer infrastructure being operable to:

obtain a valid value that has been verified by a certification authority;

receive a quoted value that defines the attribute from a second computing device;

compare the quoted value to the valid value; and

provide a result of the comparison to the second computing device.

23. Computer software embodied in a propagated signal for verifying an attribute of a computing device, the computer software comprising instructions to cause a computer system to perform the following functions:

receive an attestation identity key (AIK) and a quoted value from the computing device;

verify the quoted value using the AIK; and

validate the quoted value using an attestation server that comprises a set of valid values, wherein each valid value has been certified by a certification authority.

* * * * *