UNITED STATES PATENT AND TRADEMARK OFFICE

UNITED STATES DEPARTMENT OF COMMERCE
United States Patent and Trademark Office
Address: COMMISSIONER FOR PATENTS
P.O. Box 1450
Alexandria, Virginia 22313-1450
www.uspto.gov

APPLICATION NO.	ISSUE DATE	PATENT NO.	ATTORNEY DOCKET NO.	CONFIRMATION NO.
15/875,605	05/04/2021	10996418	02316.2584US23/ADC003176	4897

142510 7590 04/14/2021

M&G CommScope
P.O. Box 2903
Minneapolis, MN 55402

ISSUE NOTIFICATION

The projected patent number and issue date are specified above.

Determination of Patent Term Adjustment under 35 U.S.C. 154 (b)
(application filed on or after May 29, 2000)

The Patent Term Adjustment is 0 day(s). Any patent to issue from the above-identified application will include an indication of the adjustment on the front page.

If a Continued Prosecution Application (CPA) was filed in the above-identified application, the filing date that determines Patent Term Adjustment is the filing date of the most recent CPA.

Applicant will be able to obtain more detailed information by accessing the Patent Application Information Retrieval (PAIR) WEB site (http://pair.uspto.gov).

Any questions regarding the Patent Term Extension or Adjustment determination should be directed to the Office of Patent Legal Administration at (571)-272-7702. Questions relating to issue and publication fee payments should be directed to the Application Assistance Unit (AAU) of the Office of Data Management (ODM) at (571)-272-4200.

APPLICANT(s) (Please see PAIR WEB site http://pair.uspto.gov for additional applicants):

Scott C. Kowalczyk, Savage, MN;
CommScope Technologies LLC, Hickory, NC;
Jonathan Walter Coan, Savage, MN;
Jonathan R. Kaml, Shakopee, MN;

The United States represents the largest, most dynamic marketplace in the world and is an unparalleled location for business investment, innovation, and commercialization of new technologies. The USA offers tremendous resources and advantages for those who invest and manufacture goods here. Through SelectUSA, our nation works to encourage and facilitate business investment. To learn more about why the USA is the best country in the world to develop technology, manufacture products, and grow your business, visit SelectUSA.gov.

UNITED STATES PATENT AND TRADEMARK OFFICE

UNITED STATES DEPARTMENT OF COMMERCE
United States Patent and Trademark Office
Address: COMMISSIONER FOR PATENTS
P.O. Box 1450
Alexandria, Virginia 22313-1450
www.uspto.gov

APPLICATION NO.	FILING DATE	FIRST NAMED INVENTOR	ATTORNEY DOCKET NO.	CONFIRMATION NO.
15/875,605	01/19/2018	Scott C. Kowalczyk	02316.2584US23/ ADC003176	4897

142510 7590 04/05/2021
M&G CommScope
P.O. Box 2903
Minneapolis, MN 55402

EXAMINER
CONNELLY, MICHELLE R

ART UNIT	PAPER NUMBER
2874	

NOTIFICATION DATE	DELIVERY MODE
04/05/2021	ELECTRONIC

Please find below and/or attached an Office communication concerning this application or proceeding.

The time period for reply, if any, is set in the attached communication.

Notice of the Office communication was sent electronically on above-indicated "Notification Date" to the following e-mail address(es):

uspto142510@merchantgould.com

Response to Rule 312 Communication	Application No.	Applicant(s)	
	15/875,605	Kowalczyk et al.	
	Examiner	Art Unit	AIA (FITF) Status
	MICHELLE R CONNELLY	2874	No

-- The MAILING DATE of this communication appears on the cover sheet with the correspondence address --

1. ☑ The amendment filed on 24 February 2021 under 37 CFR 1.312 has been considered, and has been:

a) ☐ entered.

b) ☑ entered as directed to matters of form not affecting the scope of the invention.

c) ☐ disapproved because the amendment was filed after the payment of the issue fee.

Any amendment filed after the date the issue fee is paid must be accompanied by a petition under 37 CFR 1.313(c)(1) and the required fee to withdraw the application from issue.

d) ☐ disapproved. See explanation below.

e) ☐ entered in part. See explanation below.

/MICHELLE R CONNELLY/ Primary Examiner, Art Unit 2874	

OK TO ENTER: /M.R.C/

A/N 15/875,605 PATENT

IN THE UNITED STATES PATENT AND TRADEMARK OFFICE

Inventor:	Kowalczyk et al.	Examiner:	Ullah, Akm E.
Application No.:	15/875,605	Group Art Unit:	2874
Filed:	January 19, 2018	Docket No.:	02316.2584US23/ADC003176
Title:	Connecting Subscribers to a Fiber Optic Network Using a Cable Spool (as amended)		

Filed via EFS-Web

AMENDMENT UNDER 37 C.F.R. §1.312

Commissioner for Patents
P.O. Box 1450
Alexandria, Virginia 22313-1450

Pursuant to 37 C.F.R. § 1.312, Applicants hereby request that the above-identified application be amended as follows

Amendments to the Specification begin on page 2 of this paper.

Amendments to the Claims begin on page 3 of this paper.

Remarks begin on page 9 of this paper.

IN THE UNITED STATES PATENT AND TRADEMARK OFFICE

Inventor:	Kowalczyk et al.	Examiner:	Ullah, Akm E.
Application No.:	15/875,605	Group Art Unit:	2874
Filed:	January 19, 2018	Docket No.:	02316.2584US23/ADC003176
Title:	Connecting Subscribers to a Fiber Optic Network Using a Cable Spool (as amended)		

Filed via EFS-Web

AMENDMENT UNDER 37 C.F.R. §1.312

Commissioner for Patents
P.O. Box 1450
Alexandria, Virginia 22313-1450

Pursuant to 37 C.F.R. § 1.312, Applicants hereby request that the above-identified application be amended as follows

Amendments to the Specification begin on page 2 of this paper.

Amendments to the Claims begin on page 3 of this paper.

Remarks begin on page 9 of this paper.

IN THE UNITED STATES PATENT AND TRADEMARK OFFICE

Inventor:	Kowalczyk et al.	Examiner:	Ullah, Akm E.
Application No.:	15/875,605	Group Art Unit:	2874
Filed:	January 19, 2018	Docket No.:	02316.2584US23/ADC003176
Title:	Connecting Subscribers to a Fiber Optic Network Using a Cable Spool (as amended)		

Filed via EFS-Web

COMMENTS ON THE EXAMINER'S REASONS FOR ALLOWANCE

Commissioner for Patents
P.O. Box 1450
Alexandria, Virginia 22313-1450

Applicant thanks the Examiner for allowing the claims and acknowledges the Examiner's Reasons for Allowance provided in the Notice of Allowance mailed November 24, 2020.

Entry of the Statement into the record should not be construed as any agreement with or acquiescence in the reasoning stated by the Examiner. Applicant points out the reasons for allowance set forth by the Examiner are not the only reasons the claims are allowable. Each of the claims stands on its own merits and is patentable because of the recited combination of elements and not because of the presence or absence of any one particular element.

Respectfully submitted,

MERCHANT & GOULD P. C
P. O. Box 2903
Minneapolis, Minnesota 55402-0903
(612) 332-5300

142510
PATENT TRADEMARK OFFICE

Date: _February 24, 2021_____

By_/Julie K. Skoge/_____
Julie K. Skoge
Reg. No. 63,431
JKS:rlk

PART B - FEE(S) TRANSMITTAL

Complete and send this form, together with applicable fee(s), by mail or fax, or via EFS-Web.

By mail, send to: Mail Stop ISSUE FEE
Commissioner for Patents
P.O. Box 1450
Alexandria, Virginia 22313-1450

By fax, send to: (571)-273-2885

INSTRUCTIONS: This form should be used for transmitting the ISSUE FEE and PUBLICATION FEE (if required). Blocks 1 through 5 should be completed where appropriate. All further correspondence including the Patent, advance orders and notification of maintenance fees will be mailed to the current correspondence address as indicated unless corrected below or directed otherwise in Block 1, by (a) specifying a new correspondence address; and/or (b) indicating a separate "FEE ADDRESS" for maintenance fee notifications.

CURRENT CORRESPONDENCE ADDRESS (Note: Use Block 1 for any change of address)

142510 7590 11/24/2020
M&G CommScope
P.O. Box 2903
Minneapolis, MN 55402

Note: A certificate of mailing can only be used for domestic mailings of the Fee(s) Transmittal. This certificate cannot be used for any other accompanying papers. Each additional paper, such as an assignment or formal drawing, must have its own certificate of mailing or transmission.

Certificate of Mailing or Transmission

I hereby certify that this Fee(s) Transmittal is being deposited with the United States Postal Service with sufficient postage for first class mail in an envelope addressed to the Mail Stop ISSUE FEE address above, or being transmitted to the USPTO via EFS-Web or by facsimile to (571) 273-2885, on the date below.

Rebecca Krueger	(Typed or printed name)
/Rebecca Krueger/	(Signature)
February 24, 2021	(Date)

APPLICATION NO.	FILING DATE	FIRST NAMED INVENTOR	ATTORNEY DOCKET NO.	CONFIRMATION NO.
15/875,605	01/19/2018	Scott C. Kowalczyk	02316.2584US23/ ADC003176	4897

TITLE OF INVENTION: CONNECTING SUBSCRIBERS TO A FIBER OPTIC NETWORK USING A CABLE SPOOL

APPLN. TYPE	ENTITY STATUS	ISSUE FEE DUE	PUBLICATION FEE DUE	PREV. PAID ISSUE FEE	TOTAL FEE(S) DUE	DATE DUE
nonprovisional	UNDISCOUNTED	$1200	$0.00	$0.00	$1200	02/24/2021

EXAMINER	ART UNIT	CLASS-SUBCLASS
ULLAH, AKM E	2874	385-135000

1. Change of correspondence address or indication of "Fee Address" (37 CFR 1.363).

❑ Change of correspondence address (or Change of Correspondence Address form PTO/SB/122) attached.

❑ "Fee Address" indication (or "Fee Address" Indication form PTO/SB/47; Rev 03-09 or more recent) attached. **Use of a Customer Number is required.**

2. For printing on the patent front page, list
(1) The names of up to 3 registered patent attorneys or agents OR, alternatively,
(2) The name of a single firm (having as a member a registered attorney or agent) and the names of up to 2 registered patent attorneys or agents. If no name is listed, no name will be printed.

1 Merchant & Gould P.C.
2
3

3. ASSIGNEE NAME AND RESIDENCE DATA TO BE PRINTED ON THE PATENT (print or type)

PLEASE NOTE: Unless an assignee is identified below, no assignee data will appear on the patent. If an assignee is identified below, the document must have been previously recorded, or filed for recordation, as set forth in 37 CFR 3.11 and 37 CFR 3.81(a). Completion of this form is NOT a substitute for filing an assignment.

(A) NAME OF ASSIGNEE: CommScope Technologies LLC

(B) RESIDENCE: (CITY and STATE OR COUNTRY): Hickory, NC

Please check the appropriate assignee category or categories (will not be printed on the patent) : ❑ Individual ☒ Corporation or other private group entity ❑ Government

4a. Fees submitted: ☒ Issue Fee ❑ Publication Fee (if required) ❑ Advance Order - # of Copies _____

4b. Method of Payment: *(Please first reapply any previously paid fee shown above)*

☒ Electronic Payment via EFS-Web ❑ Enclosed check ❑ Non-electronic payment by credit card (Attach form PTO-2038)

☒ The Director is hereby authorized to charge the required fee(s), any deficiency, or credit any overpayment to Deposit Account No. 132725

5. **Change in Entity Status** (from status indicated above)

❑ Applicant certifying micro entity status. See 37 CFR 1.29

❑ Applicant asserting small entity status. See 37 CFR 1.27

❑ Applicant changing to regular undiscounted fee status.

NOTE: Absent a valid certification of Micro Entity Status (see forms PTO/SB/15A and 15B), issue fee payment in the micro entity amount will not be accepted at the risk of application abandonment.
NOTE: If the application was previously under micro entity status, checking this box will be taken to be a notification of loss of entitlement to micro entity status.
NOTE: Checking this box will be taken to be a notification of loss of entitlement to small or micro entity status, as applicable.

NOTE: This form must be signed in accordance with 37 CFR 1.31 and 1.33. See 37 CFR 1.4 for signature requirements and certifications.

Authorized Signature /Julie K. Skoge/ Date February 24, 2021

Typed or printed name Julie K. Skoge Registration No. 63,431

Electronic Patent Application Fee Transmittal

Application Number:	15875605
Filing Date:	19-Jan-2018
Title of Invention:	CONNECTING SUBSCRIBERS TO A FIBER OPTIC NETWORK USING A CABLE SPOOL
First Named Inventor/Applicant Name:	Scott C. Kowalczyk
Filer:	Mark L. Gleason/Rebecca Krueger
Attorney Docket Number:	02316.2584US23/ADC003176

Filed as Large Entity

Filing Fees for Utility under 35 USC 111(a)

Description	Fee Code	Quantity	Amount	Sub-Total in USD($)
Basic Filing:				
Pages:				
Claims:				
Miscellaneous-Filing:				
Petition:				
Patent-Appeals-and-Interference:				
Post-Allowance-and-Post-Issuance:				
UTILITY APPL ISSUE FEE	1501	1	1200	1200

Description	Fee Code	Quantity	Amount	Sub-Total in USD($)
Extension-of-Time:				
Miscellaneous:				
			Total in USD ($)	**1200**

Electronic Acknowledgement Receipt

EFS ID:	42010327
Application Number:	15875605
International Application Number:	
Confirmation Number:	4897
Title of Invention:	CONNECTING SUBSCRIBERS TO A FIBER OPTIC NETWORK USING A CABLE SPOOL
First Named Inventor/Applicant Name:	Scott C. Kowalczyk
Customer Number:	142510
Filer:	Mark L. Gleason/Rebecca Krueger
Filer Authorized By:	Mark L. Gleason
Attorney Docket Number:	02316.2584US23/ADC003176
Receipt Date:	24-FEB-2021
Filing Date:	19-JAN-2018
Time Stamp:	14:33:48
Application Type:	Utility under 35 USC 111(a)

Payment information:

Submitted with Payment	yes
Payment Type	CARD
Payment was successfully received in RAM	$1200
RAM confirmation Number	E20212NE34194624
Deposit Account	132725
Authorized User	Rebecca Krueger

The Director of the USPTO is hereby authorized to charge indicated fees and credit any overpayment as follows:

37 CFR 1.21 (Miscellaneous fees and charges)

File Listing:

Document Number	Document Description	File Name	File Size(Bytes)/ Message Digest	Multi Part /.zip	Pages (if appl.)
1		2021-02-24-312-Amendment.PDF	98748 d544648d0fb4233dcc002b3d9d9ab80682bfd51a	yes	9

Multipart Description/PDF files in .zip description

Document Description	Start	End
Applicant Arguments/Remarks Made in an Amendment	9	9
Claims	3	8
Specification	2	2
Amendment after Notice of Allowance (Rule 312)	1	1

Warnings:

Information:

2	Post Allowance Communication - Incoming	2021-02-24-Comments-Reasons-Allowance.PDF	79145 a6ffbc5f0e30f55afb9650223b1ed5f8f1aed752	no	1

Warnings:

Information:

3	Issue Fee Payment (PTO-85B)	2021-02-24-Issue-Fee.PDF	121955 8d1c021a21ef1914fa017de8eca5ba77aa6676ec	no	1

Warnings:

Information:

4	Fee Worksheet (SB06)	fee-info.pdf	30816 042c78cded993e3ef1f3d6dc2450b06871ac1151	no	2

Warnings:

Information:

Total Files Size (in bytes):	330664

This Acknowledgement Receipt evidences receipt on the noted date by the USPTO of the indicated documents, characterized by the applicant, and including page counts, where applicable. It serves as evidence of receipt similar to a Post Card, as described in MPEP 503.

New Applications Under 35 U.S.C. 111
If a new application is being filed and the application includes the necessary components for a filing date (see 37 CFR 1.53(b)-(d) and MPEP 506), a Filing Receipt (37 CFR 1.54) will be issued in due course and the date shown on this Acknowledgement Receipt will establish the filing date of the application.
National Stage of an International Application under 35 U.S.C. 371
If a timely submission to enter the national stage of an international application is compliant with the conditions of 35 U.S.C. 371 and other applicable requirements a Form PCT/DO/EO/903 indicating acceptance of the application as a national stage submission under 35 U.S.C. 371 will be issued in addition to the Filing Receipt, in due course.
New International Application Filed with the USPTO as a Receiving Office
If a new international application is being filed and the international application includes the necessary components for an international filing date (see PCT Article 11 and MPEP 1810), a Notification of the International Application Number and of the International Filing Date (Form PCT/RO/105) will be issued in due course, subject to prescriptions concerning national security, and the date shown on this Acknowledgement Receipt will establish the international filing date of the application.

REMARKS

The present application was allowed on November 24, 2020. Editorial revisions are made to claims 1, 4, and 17. The specification also is amended to update the cross reference paragraph. Support for these changes can be found throughout the specification and figures. No new matter has been added. No additional search or examination is necessitated by the amendments, nor is any substantial amount of additional work required on the part of the Patent Office or the Examiner.

The Examiner is invited to contact Applicants' attorneys, at the below-listed telephone number, if there are any questions regarding this communication.

Please charge any additional fees or credit any overpayment to Deposit Account No. 13-2725. If the Examiner has any questions, please contact the undersigned at the below-listed telephone number.

Respectfully submitted,

MERCHANT & GOULD P.C.
P.O. Box 2903
Minneapolis, Minnesota 55402-0903
(612) 332-5300

Date: _February 24, 2021_____

__/Julie K. Skoge/_____
Julie K. Skoge
Reg. No. 63,431

142510
PATENT TRADEMARK OFFICE

Amendments to the Claims:

This listing of claims will replace all prior versions and listings of claims in the application.

Listing of Claims:

1. (Currently Amended) A method of connecting a subscriber to a fiber optic network using a fiber optic enclosure, the fiber optic enclosure including a main housing, a cable spool disposed within an interior of the main housing, an adapter disposed within the interior of the main housing, and a cover that selectively provides and blocks access to the interior of the main housing, the cable spool holding at least a portion of an optical cable that includes an optical fiber extending between a first end and a second end, the first end being terminated at a first optical connector and the second end being terminated at a second optical connector, the method comprising:

paying out a portion of the optical cable from the cable spool by rotating the cable spool while the second optical connector rotates in concert with the cable spool; ~~and~~

opening the cover to provide access to the interior of the main housing;

routing a connectorized end of a subscriber cable into the interior of the main housing so that a plug connector terminating the subscriber cable is disposed fully inside the main housing, the subscriber cable being different from the optical cable held on the cable spool;

plugging the connectorized end of the subscriber cable into the adapter while the plug connector remains fully inside the main housing; and

closing the cover to block access to the interior of the main housing after the subscriber cable is plugged into the adapter, wherein the adapter, the second optical connector, and the connectorized end of the subscriber cable remain disposed within the interior of the main housing when the cover is closed.

2. (Original) The method of claim 1, wherein the adapter rotates in concert with the cable spool.

3. (Original) The method of claim 1, further comprising mounting the main housing to a surface.

4. (Currently Amended) The method of claim 1, wherein paying out ~~a~~ the portion of the optical cable includes pulling on the optical cable at the first optical connector

5. (Original) The method of claim 1, wherein the second optical connector is plugged into the adapter before paying out the portion of the optical cable.

6. (Original) The method of claim 1, further comprising optically coupling the first optical connector to the fiber optic network at a location remote from the fiber optic enclosure.

7. (Previously Presented) The method of claim 3, wherein optically coupling the first optical connector to the fiber optic network is performed before mounting the main housing to the surface.

8. (Previously Presented) The method of claim 3, wherein optically coupling the first optical connector to the fiber optic network is performed after mounting the main housing to the surface.

9. (Original) The method of claim 1, wherein opening the cover comprises pivoting the cover relative to the main housing.

10. (Original) The method of claim 1, wherein routing the connectorized end of the subscriber cable into the interior of the main housing comprises routing the connectorized end through a cable port.

11. (Original) The method of claim 10, wherein the main housing and the cover cooperate to define the cable port.

12. (Original) The method of claim 10, wherein the cable port is environmentally sealed.

13. (Original) The method of claim 12, wherein the cable port is sealed using a slitted sealing member.

14. (Original) The method of claim 12, wherein the cable port is sealed using a slitted foam member.

15. (Original) The method of claim 1, wherein the optical fiber is one of a plurality of optical fibers of the optical cable, and wherein a respective first end of each of the plurality of optical fibers is terminated at the first optical connector.

16. (Original) The method of claim 15, wherein a respective second end of each of the plurality of optical fibers is separately terminated at a respective second optical connector, each of the respective second optical connectors rotating in concert with the cable spool when the optical cable is paid out from the cable spool.

17. (Currently Amended) The method of claim 16, wherein the adapter is one of a plurality of adapters disposed within the interior of the main housing; and wherein each of the respective second optical connectors ~~are~~ is plugged into one of the plurality of adapters.

18. (Original) The method of claim 17, wherein connectorized ends of additional subscriber cables are routed into the interior of the main housing and plugged into respective ones of the plurality of adapters when the cover is open.

19. (Original) The method of claim 1, wherein the cable spool rotates about an axis of rotation oriented to intersect the cover when the cover blocks access to the interior of the main housing.

20. (Previously Presented) A method of connecting a subscriber to a fiber optic network using a fiber optic enclosure, the fiber optical enclosure including a main housing and a cover, the main housing having opposite rear and front sides, the cover being movable relative to the main housing between an open position and a closed position, the cover blocking access to an

interior of the main housing through the front side when in the closed position and allowing access to the interior through the front side when in the open position, the method comprising:

paying out an optical cable from a cable spool disposed within the interior of the main housing, the optical cable extending between a first end and a second end, the first end being routed away from the interior of the main housing while the optical cable is being paid out, the second end rotating in unison with the cable spool within the interior of the main housing while the optical cable is being paid out;

routing an end of a subscriber cable into the interior of the main housing while the cover is in the open position;

optically coupling the end of the subscriber cable to the second end of the optical cable at an optical adapter disposed within the interior of the main housing while the cover is in the open position, the optical adapter being inwardly spaced from sidewalls bounding the main housing; and

moving the cover to the closed position to enclose the optical adapter, the end of the subscriber cable, and the second end of the cable within the interior of the main housing.

21. (Original) The method of claim 20, wherein paying out the optical cable includes pulling on the first end of the optical cable.

22. (Original) The method of claim 20, wherein the optical cable includes a plurality of optical fibers, wherein the plurality of optical fibers are connectorized at a multi-fiber connector at the first end of the optical cable; and wherein the plurality of optical fibers are individually connectorized at single-fiber connectors at the second end of the optical cable.

23. (Original) The method of claim 22, wherein the subscriber cable is one of a plurality of subscriber cables and the optical adapter is one of a plurality of optical adapters, and wherein the method further comprises:

plugging each of the single-fiber connectors into respective ones of the plurality of optical adapters within the interior of the main housing while the cover is in the open position; and

plugging connectorized ends of the subscriber cables into respective ones of the plurality of optical adapters while the cover is in the open position;

wherein moving the cover to the closed position encloses the plurality of optical adapters, the single-fiber connectors, and the connectorized ends of the plurality of subscriber cables.

24. (Original) The method of claim 20, further comprising mounting the rear side of the main housing to a wall.

25. (Previously Presented) A method of connecting a subscriber to a fiber optic network using a fiber optic enclosure, the fiber optical enclosure including a main housing and a cover, the main housing having opposite rear and front sides, the cover being movable relative to the main housing between an open position and a closed position, the cover blocking access to an interior of the main housing through the front side when in the closed position and allowing access to the interior through the front side when in the open position, the method comprising:

paying out an optical cable from a cable spool disposed within the interior of the main housing, the optical cable extending between a first end and a second end, the first end being routed away from the interior of the main housing while the optical cable is being paid out, the second end rotating in unison with the cable spool within the interior of the main housing while the optical cable is being paid out;

routing an end of a subscriber cable into the interior of the main housing while the cover is in the open position;

optically coupling the end of the subscriber cable to the second end of the optical cable at an optical adapter disposed within the interior of the main housing while the cover is in the open position; and

moving the cover to the closed position to enclose the optical adapter, the end of the subscriber cable, and the second end of the cable within the interior of the main housing;

wherein the optical cable includes a plurality of optical fibers, wherein the plurality of optical fibers are connectorized at a multi-fiber connector at the first end of the optical cable; and wherein the plurality of optical fibers are individually connectorized at single-fiber connectors at the second end of the optical cable;

wherein the subscriber cable is one of a plurality of subscriber cables and the optical adapter is one of a plurality of optical adapters, and

wherein the method further comprises:

plugging each of the single-fiber connectors into respective ones of the plurality of optical adapters within the interior of the main housing while the cover is in the open position; and

plugging connectorized ends of the subscriber cables into respective ones of the plurality of optical adapters while the cover is in the open position;

wherein moving the cover to the closed position encloses the plurality of optical adapters, the single-fiber connectors, and the connectorized ends of the plurality of subscriber cables.

Amendments to the Specification:

Please amend the specification beginning at page 1, line 5 as follows:

This application is a continuation of application Serial No. 15/470,311, filed March 27, 2017, now U.S. Patent No. 10,712,518, which is a continuation of application Serial No. 14/979,870, filed December 28, 2015, now U.S. Patent No. 9,606,319, which is a continuation of application Serial No. 14/539,459, filed November 12, 2014, now U.S. Patent No. 9,261,666, which is a continuation of application Serial No. 14/132,691, filed December 18, 2013, now U.S. Patent No. 8,891,931, which is a continuation of application Serial No. 13/924,191, filed June 21, 2013, now U.S. Patent No. 8,705,929, which is a continuation of application Serial No. 13/479,015, filed May 23, 2012, now U.S. Patent No. 8,494,333, which is a continuation of application Serial No. 13/032,337, filed February 22, 2011, now U.S. Patent No. 8,189,984, which is a continuation of application Serial No. 12/793,556, filed June 3, 2010, now U.S. Patent No. 7,894,701, which is a continuation of application Serial No. 12/182,705, filed July 30, 2008, now U.S. Patent No. 7,756,379, which application claims the benefit of provisional application Serial Nos. 61/029,248, filed February 15, 2008 and 60/954,214, filed August 6, 2007, which applications are incorporated herein by reference in their entirety.

UNITED STATES PATENT AND TRADEMARK OFFICE

UNITED STATES DEPARTMENT OF COMMERCE
United States Patent and Trademark Office
Address: COMMISSIONER FOR PATENTS
P.O. Box 1450
Alexandria, Virginia 22313-1450
www.uspto.gov

NOTICE OF ALLOWANCE AND FEE(S) DUE

142510 7590 11/24/2020
M&G CommScope
P.O. Box 2903
Minneapolis, MN 55402

EXAMINER
ULLAH, AKM E

ART UNIT	PAPER NUMBER
2874	

DATE MAILED: 11/24/2020

APPLICATION NO.	FILING DATE	FIRST NAMED INVENTOR	ATTORNEY DOCKET NO.	CONFIRMATION NO.
15/875,605	01/19/2018	Scott C. Kowalczyk	02316.2584US23/ ADC003176	4897

TITLE OF INVENTION: CONNECTING SUBSCRIBERS TO A FIBER OPTIC NETWORK USING A CABLE SPOOL

APPLN. TYPE	ENTITY STATUS	ISSUE FEE DUE	PUBLICATION FEE DUE	PREV. PAID ISSUE FEE	TOTAL FEE(S) DUE	DATE DUE
nonprovisional	UNDISCOUNTED	$1200	$0.00	$0.00	$1200	02/24/2021

THE APPLICATION IDENTIFIED ABOVE HAS BEEN EXAMINED AND IS ALLOWED FOR ISSUANCE AS A PATENT. PROSECUTION ON THE MERITS IS CLOSED. THIS NOTICE OF ALLOWANCE IS NOT A GRANT OF PATENT RIGHTS. THIS APPLICATION IS SUBJECT TO WITHDRAWAL FROM ISSUE AT THE INITIATIVE OF THE OFFICE OR UPON PETITION BY THE APPLICANT. SEE 37 CFR 1.313 AND MPEP 1308.

THE ISSUE FEE AND PUBLICATION FEE (IF REQUIRED) MUST BE PAID WITHIN THREE MONTHS FROM THE MAILING DATE OF THIS NOTICE OR THIS APPLICATION SHALL BE REGARDED AS ABANDONED. THIS STATUTORY PERIOD CANNOT BE EXTENDED. SEE 35 U.S.C. 151. THE ISSUE FEE DUE INDICATED ABOVE DOES NOT REFLECT A CREDIT FOR ANY PREVIOUSLY PAID ISSUE FEE IN THIS APPLICATION. IF AN ISSUE FEE HAS PREVIOUSLY BEEN PAID IN THIS APPLICATION (AS SHOWN ABOVE), THE RETURN OF PART B OF THIS FORM WILL BE CONSIDERED A REQUEST TO REAPPLY THE PREVIOUSLY PAID ISSUE FEE TOWARD THE ISSUE FEE NOW DUE.

HOW TO REPLY TO THIS NOTICE:

I. Review the ENTITY STATUS shown above. If the ENTITY STATUS is shown as SMALL or MICRO, verify whether entitlement to that entity status still applies.

If the ENTITY STATUS is the same as shown above, pay the TOTAL FEE(S) DUE shown above.

If the ENTITY STATUS is changed from that shown above, on PART B - FEE(S) TRANSMITTAL, complete section number 5 titled "Change in Entity Status (from status indicated above)".

For purposes of this notice, small entity fees are 1/2 the amount of undiscounted fees, and micro entity fees are 1/2 the amount of small entity fees.

II. PART B - FEE(S) TRANSMITTAL, or its equivalent, must be completed and returned to the United States Patent and Trademark Office (USPTO) with your ISSUE FEE and PUBLICATION FEE (if required). If you are charging the fee(s) to your deposit account, section "4b" of Part B - Fee(s) Transmittal should be completed and an extra copy of the form should be submitted. If an equivalent of Part B is filed, a request to reapply a previously paid issue fee must be clearly made, and delays in processing may occur due to the difficulty in recognizing the paper as an equivalent of Part B.

III. All communications regarding this application must give the application number. Please direct all communications prior to issuance to Mail Stop ISSUE FEE unless advised to the contrary.

IMPORTANT REMINDER: Maintenance fees are due in utility patents issuing on applications filed on or after Dec. 12, 1980. It is patentee's responsibility to ensure timely payment of maintenance fees when due. More information is available at www.uspto.gov/PatentMaintenanceFees.

PART B - FEE(S) TRANSMITTAL

Complete and send this form, together with applicable fee(s), by mail or fax, or via EFS-Web.

By mail, send to: Mail Stop ISSUE FEE
Commissioner for Patents
P.O. Box 1450
Alexandria, Virginia 22313-1450

By fax, send to: (571)-273-2885

INSTRUCTIONS: This form should be used for transmitting the ISSUE FEE and PUBLICATION FEE (if required). Blocks 1 through 5 should be completed where appropriate. All further correspondence including the Patent, advance orders and notification of maintenance fees will be mailed to the current correspondence address as indicated unless corrected below or directed otherwise in Block 1, by (a) specifying a new correspondence address; and/or (b) indicating a separate "FEE ADDRESS" for maintenance fee notifications.

CURRENT CORRESPONDENCE ADDRESS (Note: Use Block 1 for any change of address)

142510 7590 11/24/2020
M&G CommScope
P.O. Box 2903
Minneapolis, MN 55402

Note: A certificate of mailing can only be used for domestic mailings of the Fee(s) Transmittal. This certificate cannot be used for any other accompanying papers. Each additional paper, such as an assignment or formal drawing, must have its own certificate of mailing or transmission.

Certificate of Mailing or Transmission

I hereby certify that this Fee(s) Transmittal is being deposited with the United States Postal Service with sufficient postage for first class mail in an envelope addressed to the Mail Stop ISSUE FEE address above, or being transmitted to the USPTO via EFS-Web or by facsimile to (571) 273-2885, on the date below.

(Typed or printed name)

(Signature)

(Date)

APPLICATION NO.	FILING DATE	FIRST NAMED INVENTOR	ATTORNEY DOCKET NO.	CONFIRMATION NO.
15/875,605	01/19/2018	Scott C. Kowalczyk	02316.2584US23/ ADC003176	4897

TITLE OF INVENTION: CONNECTING SUBSCRIBERS TO A FIBER OPTIC NETWORK USING A CABLE SPOOL

APPLN. TYPE	ENTITY STATUS	ISSUE FEE DUE	PUBLICATION FEE DUE	PREV. PAID ISSUE FEE	TOTAL FEE(S) DUE	DATE DUE
nonprovisional	UNDISCOUNTED	$1200	$0.00	$0.00	$1200	02/24/2021

EXAMINER	ART UNIT	CLASS-SUBCLASS
ULLAH, AKM E	2874	385-135000

1. Change of correspondence address or indication of "Fee Address" (37 CFR 1.363).

❑ Change of correspondence address (or Change of Correspondence Address form PTO/SB/122) attached.

❑ "Fee Address" indication (or "Fee Address" Indication form PTO/SB/47; Rev 03-09 or more recent) attached. **Use of a Customer Number is required.**

2. For printing on the patent front page, list
(1) The names of up to 3 registered patent attorneys or agents OR, alternatively,
(2) The name of a single firm (having as a member a registered attorney or agent) and the names of up to 2 registered patent attorneys or agents. If no name is listed, no name will be printed.

1_____
2_____
3_____

3. ASSIGNEE NAME AND RESIDENCE DATA TO BE PRINTED ON THE PATENT (print or type)

PLEASE NOTE: Unless an assignee is identified below, no assignee data will appear on the patent. If an assignee is identified below, the document must have been previously recorded, or filed for recordation, as set forth in 37 CFR 3.11 and 37 CFR 3.81(a). Completion of this form is NOT a substitute for filing an assignment.

(A) NAME OF ASSIGNEE (B) RESIDENCE: (CITY and STATE OR COUNTRY)

Please check the appropriate assignee category or categories (will not be printed on the patent) : ❑ Individual ❑ Corporation or other private group entity ❑ Government

4a. Fees submitted: ❑Issue Fee ❑Publication Fee (if required) ❑Advance Order - # of Copies _____

4b. Method of Payment: *(Please first reapply any previously paid fee shown above)*

❑ Electronic Payment via EFS-Web ❑ Enclosed check ❑ Non-electronic payment by credit card (Attach form PTO-2038)

❑ The Director is hereby authorized to charge the required fee(s), any deficiency, or credit any overpayment to Deposit Account No. _____

5. **Change in Entity Status** (from status indicated above)

❑ Applicant certifying micro entity status. See 37 CFR 1.29

❑ Applicant asserting small entity status. See 37 CFR 1.27

❑ Applicant changing to regular undiscounted fee status.

NOTE: Absent a valid certification of Micro Entity Status (see forms PTO/SB/15A and 15B), issue fee payment in the micro entity amount will not be accepted at the risk of application abandonment.
NOTE: If the application was previously under micro entity status, checking this box will be taken to be a notification of loss of entitlement to micro entity status.
NOTE: Checking this box will be taken to be a notification of loss of entitlement to small or micro entity status, as applicable.

NOTE: This form must be signed in accordance with 37 CFR 1.31 and 1.33. See 37 CFR 1.4 for signature requirements and certifications.

Authorized Signature _____ Date _____

Typed or printed name _____ Registration No. _____

UNITED STATES PATENT AND TRADEMARK OFFICE

UNITED STATES DEPARTMENT OF COMMERCE
United States Patent and Trademark Office
Address: COMMISSIONER FOR PATENTS
P.O. Box 1450
Alexandria, Virginia 22313-1450
www.uspto.gov

APPLICATION NO.	FILING DATE	FIRST NAMED INVENTOR	ATTORNEY DOCKET NO.	CONFIRMATION NO.
15/875,605	01/19/2018	Scott C. Kowalczyk	02316.2584US23/ ADC003176	4897

142510 7590 11/24/2020
M&G CommScope
P.O. Box 2903
Minneapolis, MN 55402

EXAMINER
ULLAH, AKM E

ART UNIT	PAPER NUMBER
2874	

DATE MAILED: 11/24/2020

Determination of Patent Term Adjustment under 35 U.S.C. 154 (b)
(Applications filed on or after May 29, 2000)

The Office has discontinued providing a Patent Term Adjustment (PTA) calculation with the Notice of Allowance.

Section 1(h)(2) of the AIA Technical Corrections Act amended 35 U.S.C. 154(b)(3)(B)(i) to eliminate the requirement that the Office provide a patent term adjustment determination with the notice of allowance. See Revisions to Patent Term Adjustment, 78 Fed. Reg. 19416, 19417 (Apr. 1, 2013). Therefore, the Office is no longer providing an initial patent term adjustment determination with the notice of allowance. The Office will continue to provide a patent term adjustment determination with the Issue Notification Letter that is mailed to applicant approximately three weeks prior to the issue date of the patent, and will include the patent term adjustment on the patent. Any request for reconsideration of the patent term adjustment determination (or reinstatement of patent term adjustment) should follow the process outlined in 37 CFR 1.705.

Any questions regarding the Patent Term Extension or Adjustment determination should be directed to the Office of Patent Legal Administration at (571)-272-7702. Questions relating to issue and publication fee payments should be directed to the Customer Service Center of the Office of Patent Publication at 1-(888)-786-0101 or (571)-272-4200.

OMB Clearance and PRA Burden Statement for PTOL-85 Part B

The Paperwork Reduction Act (PRA) of 1995 requires Federal agencies to obtain Office of Management and Budget approval before requesting most types of information from the public. When OMB approves an agency request to collect information from the public, OMB (i) provides a valid OMB Control Number and expiration date for the agency to display on the instrument that will be used to collect the information and (ii) requires the agency to inform the public about the OMB Control Number's legal significance in accordance with 5 CFR 1320.5(b).

The information collected by PTOL-85 Part B is required by 37 CFR 1.311. The information is required to obtain or retain a benefit by the public which is to file (and by the USPTO to process) an application. Confidentiality is governed by 35 U.S.C. 122 and 37 CFR 1.14. This collection is estimated to take 30 minutes to complete, including gathering, preparing, and submitting the completed application form to the USPTO. Time will vary depending upon the individual case. Any comments on the amount of time you require to complete this form and/or suggestions for reducing this burden, should be sent to the Chief Information Officer, U.S. Patent and Trademark Office, U.S. Department of Commerce, P.O. Box 1450, Alexandria, Virginia 22313-1450. DO NOT SEND FEES OR COMPLETED FORMS TO THIS ADDRESS. SEND TO: Commissioner for Patents, P.O. Box 1450, Alexandria, Virginia 22313-1450. Under the Paperwork Reduction Act of 1995, no persons are required to respond to a collection of information unless it displays a valid OMB control number.

Privacy Act Statement

The Privacy Act of 1974 (P.L. 93-579) requires that you be given certain information in connection with your submission of the attached form related to a patent application or patent. Accordingly, pursuant to the requirements of the Act, please be advised that: (1) the general authority for the collection of this information is 35 U.S.C. 2(b)(2); (2) furnishing of the information solicited is voluntary; and (3) the principal purpose for which the information is used by the U.S. Patent and Trademark Office is to process and/or examine your submission related to a patent application or patent. If you do not furnish the requested information, the U.S. Patent and Trademark Office may not be able to process and/or examine your submission, which may result in termination of proceedings or abandonment of the application or expiration of the patent.

The information provided by you in this form will be subject to the following routine uses:

1. The information on this form will be treated confidentially to the extent allowed under the Freedom of Information Act (5 U.S.C. 552) and the Privacy Act (5 U.S.C 552a). Records from this system of records may be disclosed to the Department of Justice to determine whether disclosure of these records is required by the Freedom of Information Act.
2. A record from this system of records may be disclosed, as a routine use, in the course of presenting evidence to a court, magistrate, or administrative tribunal, including disclosures to opposing counsel in the course of settlement negotiations.
3. A record in this system of records may be disclosed, as a routine use, to a Member of Congress submitting a request involving an individual, to whom the record pertains, when the individual has requested assistance from the Member with respect to the subject matter of the record.
4. A record in this system of records may be disclosed, as a routine use, to a contractor of the Agency having need for the information in order to perform a contract. Recipients of information shall be required to comply with the requirements of the Privacy Act of 1974, as amended, pursuant to 5 U.S.C. 552a(m).
5. A record related to an International Application filed under the Patent Cooperation Treaty in this system of records may be disclosed, as a routine use, to the International Bureau of the World Intellectual Property Organization, pursuant to the Patent Cooperation Treaty.
6. A record in this system of records may be disclosed, as a routine use, to another federal agency for purposes of National Security review (35 U.S.C. 181) and for review pursuant to the Atomic Energy Act (42 U.S.C. 218(c)).
7. A record from this system of records may be disclosed, as a routine use, to the Administrator, General Services, or his/her designee, during an inspection of records conducted by GSA as part of that agency's responsibility to recommend improvements in records management practices and programs, under authority of 44 U.S.C. 2904 and 2906. Such disclosure shall be made in accordance with the GSA regulations governing inspection of records for this purpose, and any other relevant (i.e., GSA or Commerce) directive. Such disclosure shall not be used to make determinations about individuals.
8. A record from this system of records may be disclosed, as a routine use, to the public after either publication of the application pursuant to 35 U.S.C. 122(b) or issuance of a patent pursuant to 35 U.S.C. 151. Further, a record may be disclosed, subject to the limitations of 37 CFR 1.14, as a routine use, to the public if the record was filed in an application which became abandoned or in which the proceedings were terminated and which application is referenced by either a published application, an application open to public inspection or an issued patent.
9. A record from this system of records may be disclosed, as a routine use, to a Federal, State, or local law enforcement agency, if the USPTO becomes aware of a violation or potential violation of law or regulation.

IPR2025-01119
Belden EX1023

Notice of Allowability	Application No. 15/875,605	Applicant(s) Kowalczyk et al.	
	Examiner Akm E Ullah	Art Unit 2874	AIA (FITF) Status No

-- The MAILING DATE of this communication appears on the cover sheet with the correspondence address--

All claims being allowable, PROSECUTION ON THE MERITS IS (OR REMAINS) CLOSED in this application. If not included herewith (or previously mailed), a Notice of Allowance (PTOL-85) or other appropriate communication will be mailed in due course. **THIS NOTICE OF ALLOWABILITY IS NOT A GRANT OF PATENT RIGHTS.** This application is subject to withdrawal from issue at the initiative of the Office or upon petition by the applicant. See 37 CFR 1.313 and MPEP 1308.

1. ☑ This communication is responsive to 8/24/2020.
   ☐ A declaration(s)/affidavit(s) under **37 CFR 1.130(b)** was/were filed on _____.

2. ☐ An election was made by the applicant in response to a restriction requirement set forth during the interview on _____; the restriction requirement and election have been incorporated into this action.

3. ☑ The allowed claim(s) is/are 1-25 . As a result of the allowed claim(s), you may be eligible to benefit from the **Patent Prosecution Highway** program at a participating intellectual property office for the corresponding application. For more information, please see **http://www.uspto.gov/patents/init_events/pph/index.jsp** or send an inquiry to **PPHfeedback@uspto.gov.**

4. ☐ Acknowledgment is made of a claim for foreign priority under 35 U.S.C. § 119(a)-(d) or (f).

   Certified copies:

   a) ☐ All b) ☐ Some *c) ☐ None of the:

   1. ☐ Certified copies of the priority documents have been received.
   2. ☐ Certified copies of the priority documents have been received in Application No. _____ .
   3. ☐ Copies of the certified copies of the priority documents have been received in this national stage application from the International Bureau (PCT Rule 17.2(a)).

   * Certified copies not received: _____ .

Applicant has THREE MONTHS FROM THE "MAILING DATE" of this communication to file a reply complying with the requirements noted below. Failure to timely comply will result in ABANDONMENT of this application.
THIS THREE-MONTH PERIOD IS NOT EXTENDABLE.

5. ☐ CORRECTED DRAWINGS (as "replacement sheets") must be submitted.
   ☐ including changes required by the attached Examiner's Amendment / Comment or in the Office action of Paper No./Mail Date _____ .

   Identifying indicia such as the application number (see 37 CFR 1.84(c)) should be written on the drawings in the front (not the back) of each sheet. Replacement sheet(s) should be labeled as such in the header according to 37 CFR 1.121(d).

6. ☐ DEPOSIT OF and/or INFORMATION about the deposit of BIOLOGICAL MATERIAL must be submitted. Note the attached Examiner's comment regarding REQUIREMENT FOR THE DEPOSIT OF BIOLOGICAL MATERIAL.

Attachment(s)

1. ☑ Notice of References Cited (PTO-892)
2. ☑ Information Disclosure Statements (PTO/SB/08), Paper No./Mail Date _____.
3. ☐ Examiner's Comment Regarding Requirement for Deposit of Biological Material _____.
4. ☐ Interview Summary (PTO-413), Paper No./Mail Date. _____.
5. ☐ Examiner's Amendment/Comment
6. ☑ Examiner's Statement of Reasons for Allowance
7. ☐ Other _____.

/AKM E ULLAH/
Primary Examiner, Art Unit 2874

Notice of Pre-AIA or AIA Status

The present application is being examined under the pre-AIA first to invent provisions.

The following is an examiner's statement of reasons for allowance:

None of the reference disclose alone or in combination or suggest routing a connectorized end of a subscriber cable into the interior of the main housing so that a plug connector terminating the subscriber cable is disposed fully inside the main housing; and plugging the connectorized end of the subscriber cable into the adapter while the plug connector remains fully inside the main housing in combination with the other features recited in claim 1.

Any comments considered necessary by applicant must be submitted no later than the payment of the issue fee and, to avoid processing delays, should preferably accompany the issue fee. Such submissions should be clearly labeled "Comments on Statement of Reasons for Allowance."

Conclusion

Any inquiry concerning this communication or earlier communications from the examiner should be directed to Akm Enayet Ullah whose telephone number is (571)272-2361. The examiner can normally be reached on M-TH: 6AM - 10 PM.

Examiner interviews are available via telephone, in-person, and video conferencing using a USPTO supplied web-based collaboration tool. To schedule an interview, applicant is encouraged to use the USPTO Automated Interview Request (AIR) at http://www.uspto.gov/interviewpractice.

If attempts to reach the examiner by telephone are unsuccessful, the examiner's supervisor, Uyen-Chau Le can be reached on 571-272-2397. The fax phone number for the organization where this application or proceeding is assigned is 571-273-8300.

Information regarding the status of an application may be obtained from the Patent Application Information Retrieval (PAIR) system. Status information for published applications may be obtained from either Private PAIR or Public PAIR. Status information for unpublished applications is available through Private PAIR only. For more information about the PAIR system, see https://ppair-my.uspto.gov/pair/PrivatePair. Should you have questions on access to the Private PAIR system, contact the Electronic Business Center (EBC) at 866-217-9197 (toll-free). If you would like assistance from a USPTO Customer Service Representative or access to the automated information system, call 800-786-9199 (IN USA OR CANADA) or 571-272-1000.

/AKM E ULLAH/
Primary Examiner, Art Unit 2874

Notice of References Cited	Application/Control No. 15/875,605	Applicant(s)/Patent Under Reexamination Kowalczyk et al.	
	Examiner Akm E Ullah	Art Unit 2874	Page 1 of 1

U.S. PATENT DOCUMENTS

*		Document Number Country Code-Number-Kind Code	Date MM-YYYY	Name	CPC Classification	US Classification
*	A	US-7120349-B2	10-2006	Elliott; Stephen J.	G02B6/4457	385/137
*	B	US-8428419-B2	04-2013	LeBlanc; Thomas G.	G02B6/4441	385/135
*	C	US-10033463-B2	07-2018	Hubbard; Paul David	G02B6/4472	1/1
*	D	US-20080131132-A1	06-2008	Solheid; James J.	G02B6/4441	398/117
*	E	US-20180143386-A1	05-2018	Coan; Jonathan Walter	G02B6/3897	1/1
*	F	US-20180299632-A1	10-2018	VAN BAELEN; David Jan Irma	G02B6/4466	1/1
	G					
	H					
	I					
	J					
	K					
	L					
	M					

FOREIGN PATENT DOCUMENTS

*		Document Number Country Code-Number-Kind Code	Date MM-YYYY	Country	Name	CPC Classification
	N					
	O					
	P					
	Q					
	R					
	S					
	T					

NON-PATENT DOCUMENTS

*		Include as applicable: Author, Title Date, Publisher, Edition or Volume, Pertinent Pages)
	U	
	V	
	W	
	X	

*A copy of this reference is not being furnished with this Office action. (See MPEP § 707.05(a).)
Dates in MM-YYYY format are publication dates. Classifications may be US or foreign.

Index of Claims	Application/Control No.	Applicant(s)/Patent Under Reexamination
	15/875,605	Kowalczyk et al.
	Examiner	**Art Unit**
	Akm E Ullah	2874

✓	Rejected	-	Cancelled	N	Non-Elected	A	Appeal
=	Allowed	÷	Restricted	I	Interference	O	Objected

CLAIMS

☑ Claims renumbered in the same order as presented by applicant ☐ CPA ☐ T.D. ☐ R.1.47

CLAIM		DATE								
Final	Original	05/02/2019	11/06/2019	06/18/2020	11/16/2020					
1	1	=	✓	✓	=					
2	2	=	✓	✓	=					
3	3	=	✓	✓	=					
4	4	=	✓	✓	=					
5	5	=	✓	✓	=					
6	6	=	✓	✓	=					
7	7	=	✓	✓	=					
8	8	=	✓	✓	=					
9	9	=	✓	✓	=					
10	10	=	✓	✓	=					
11	11	=	✓	✓	=					
12	12	=	✓	✓	=					
13	13	=	✓	✓	=					
14	14	=	✓	✓	=					
15	15	=	✓	✓	=					
16	16	=	✓	✓	=					
17	17	=	✓	✓	=					
18	18	=	✓	✓	=					
19	19	=	✓	✓	=					
20	20	=	✓	✓	=					
21	21	=	✓	✓	=					
22	22	=	✓	✓	=					
23	23	=	✓	O	=					
24	24	=	✓	✓	=					
25	25				=					

Search Notes	Application/Control No.	Applicant(s)/Patent Under Reexamination
	15/875,605	Kowalczyk et al.
	Examiner	**Art Unit**
	Akm E Ullah	2874

CPC - Searched*		
Symbol	**Date**	**Examiner**
G02B 6/46, 445, 4441, 4457, 4446, 4471, 3897, 4452, 4453, 4453	05/02/2019	AU
G02B6/$.cpc.	05/02/2019	AU
Updated above	11/06/2019	AU
Updated above	06/17/2020	AU
Updated above	11/16/2020	AU

CPC Combination Sets - Searched*		
Symbol	**Date**	**Examiner**

US Classification - Searched*			
Class	**Subclass**	**Date**	**Examiner**
395	130 -135	05/02/2019	AU

* See search history printout included with this form or the SEARCH NOTES box below to determine the scope of the search.

Search Notes		
Search Notes	**Date**	**Examiner**
EAST, INVENTOR and ASSIGNEE	05/02/2019	AU
Updated above	11/06/2019	AU
Updated above	06/17/2020	AU

/AKM E ULLAH/ Primary Examiner, Art Unit 2874	

Search Notes	Application/Control No.	Applicant(s)/Patent Under Reexamination
	15/875,605	Kowalczyk et al.
	Examiner	**Art Unit**
	Akm E Ullah	2874

Interference Search			
US Class/CPC Symbol	**US Subclass/CPC Group**	**Date**	**Examiner**
G02B	limited text along with it	05/02/2019	AU

/AKM E ULLAH/ Primary Examiner, Art Unit 2874	

Issue Classification	Application/Control No.	Applicant(s)/Patent Under Reexamination
	15/875,605	Kowalczyk et al.
	Examiner	**Art Unit**
	Akm E Ullah	2874

CPC						
Symbol					**Type**	**Version**
G02B	/	6	/	4457	F	2013-01-01
G02B	/	6	/	445	I	2013-01-01
G02B	/	6	/	4441	I	2013-01-01
G02B	/	6	/	4446	I	2013-01-01
G02B	/	6	/	4471	I	2013-01-01
G02B	/	6	/	3897	I	2013-01-01
G02B	/	6	/	4452	I	2013-01-01
G02B	/	6	/	4453	I	2013-01-01
G02B	/	6	/	4454	I	2013-01-01
G02B	/	6	/	46	I	2013-01-01

CPC Combination Sets								
Symbol					**Type**	**Set**	**Ranking**	**Version**
	/		/					

NONE (Assistant Examiner) (Date)		Total Claims Allowed: 25	
/AKM E ULLAH/ Primary Examiner, Art Unit 2874 (Primary Examiner) (Date)	16 November 2020	O.G. Print Claim(s) 1	O.G. Print Figure 3

U.S. Patent and Trademark Office

Part of Paper No.: 20201116

Issue Classification	Application/Control No.	Applicant(s)/Patent Under Reexamination
	15/875,605	Kowalczyk et al.
	Examiner	**Art Unit**
	Akm E Ullah	2874

INTERNATIONAL CLASSIFICATION				
CLAIMED				
G02B	/	6	/	46
G02B	/	6	/	44
G02B	/	6	/	38

NON-CLAIMED				
	/		/	

US ORIGINAL CLASSIFICATION	
CLASS	**SUBCLASS**

CROSS REFERENCES(S)						
CLASS	**SUBCLASS (ONE SUBCLASS PER BLOCK)**					

NONE (Assistant Examiner)	(Date)	**Total Claims Allowed:** 25	
/AKM E ULLAH/ Primary Examiner, Art Unit 2874 (Primary Examiner)	16 November 2020 (Date)	O.G. Print Claim(s) 1	O.G. Print Figure 3

U.S. Patent and Trademark Office

Part of Paper No.: 20201116

Issue Classification	Application/Control No.	Applicant(s)/Patent Under Reexamination
	15/875,605	Kowalczyk et al.
	Examiner	**Art Unit**
	Akm E Ullah	2874

☑ Claims renumbered in the same order as presented by applicant ☐ CPA ☐ T.D. ☐ R.1.47

CLAIMS

Final	Original	Final	Original	Final	Original	Final	Original	Final	Original	Final	Original	Final	Original	Final	Original
1	1	10	10	19	19										
2	2	11	11	20	20										
3	3	12	12	21	21										
4	4	13	13	22	22										
5	5	14	14	23	23										
6	6	15	15	24	24										
7	7	16	16	25	25										
8	8	17	17												
9	9	18	18												

NONE (Assistant Examiner)	(Date)	**Total Claims Allowed:** 25	
/AKM E ULLAH/ Primary Examiner, Art Unit 2874 (Primary Examiner)	16 November 2020 (Date)	O.G. Print Claim(s) 1	O.G. Print Figure 3

U.S. Patent and Trademark Office

Part of Paper No.: 20201116

EAST Search History

EAST Search History (Interference)

Ref #	Hits	Search Query	DBs	Default Operator	Plurals	Time Stamp
L13	1,777	(cable adj3 spool)and(rotat$4).clm.	USPAT	OR	OFF	2020/11/16 15:53
L14	161	(first adj2 optic adj2 connector)and (second adj2 optic adj2 connector).clm.	USPAT	OR	OFF	2020/11/16 15:53
L15	1,665	(cable adj3 spool)and(rotat$4)and (connect$4).clm.	USPAT	OR	OFF	2020/11/16 15:53
L16	3	(optical adj2 connector)same(rotat$4)same(cable adj5 spool).clm.	USPAT	OR	OFF	2020/11/16 15:54
L17	60	(fiber adj3 optic$4 adj5 network) and (fiber adj2 optic$2 adj3 enclosure) and (cable adj5 spool)and (adapter)and(cable with spool).clm.	USPAT	OR	OFF	2020/11/16 15:54
L18	1,088	13 and 15	USPAT	OR	OFF	2020/11/16 15:56
L19	4	14 and 18	USPAT	OR	OFF	2020/11/16 15:56
L20	2	14 and 17	USPAT	OR	OFF	2020/11/16 15:56

11/16/2020 3:58:10 PM

Bibliographic Data

Application No: 15/875,605

Foreign Priority claimed: ○ Yes ◉ No

35 USC 119 (a-d) conditions met: ☐ Yes ☑ No ☐ Met After Allowance

Verified and Acknowledged: /AKM E ULLAH/ (Examiner's Signature) [ ] (Initials)

Title: CONNECTING SUBSCRIBERS TO A FIBER OPTIC NETWORK USING A CABLE SPOOL

FILING or 371(c) DATE	CLASS	GROUP ART UNIT	ATTORNEY DOCKET NO.
01/19/2018 **RULE**	385	2874	02316.2584US23/ADC003176

APPLICANTS

CommScope Technologies LLC, Hickory, NC, UNITED STATES

INVENTORS

Scott C. Kowalczyk, Savage, MN, UNITED STATES

Jonathan Walter Coan, Savage, MN, UNITED STATES

Jonathan R. Kaml, Shakopee, MN, UNITED STATES

CONTINUING DATA

This application is a CON of 15470311 03/27/2017 PAT 10712518

15470311 is a CON of 14979870 12/28/2015 PAT 9606319

14979870 is a CON of 14539459 11/12/2014 PAT 9261666

14539459 is a CON of 14132691 12/18/2013 PAT 8891931

14132691 is a CON of 13924191 06/21/2013 PAT 8705929

13924191 is a CON of 13479015 05/23/2012 PAT 8494333

13479015 is a CON of 13032337 02/22/2011 PAT 8189984

13032337 is a CON of 12793556 06/03/2010 PAT 7894701

12793556 is a CON of 12182705 07/30/2008 PAT 7756379

12182705 has PRO of 61029248 02/15/2008

12182705 has PRO of 60954214 08/06/2007

FOREIGN APPLICATIONS

IF REQUIRED, FOREIGN LICENSE GRANTED**

02/12/2018

STATE OR COUNTRY

UNITED STATES

ADDRESS

M&G CommScope
P.O. Box 2903
Minneapolis, MN 55402
UNITED STATES

FILING FEE RECEIVED

$2,120

EAST Search History

EAST Search History (Prior Art)

Ref #	Hits	Search Query	DBs	Default Operator	Plurals	Time Stamp
L1	3	"15875605"	US-PGPUB; USPAT; USOCR; FPRS; EPO; JPO; DERWENT; IBM_TDB	OR	OFF	2020/11/16 15:13
L2	34,480	(G02B6/3897; G02B6/4441; G02B6/4446; G02B6/445; G02B6/4452; G02B6/4453; G02B6/4454; G02B6/4457; G02B6/4471; G02B6/46).cpc.	US-PGPUB; USPAT; USOCR; FPRS; EPO; JPO; DERWENT; IBM_TDB	OR	OFF	2020/11/16 15:14
L3	1,306	((("COMMSCOPE") near3 ("TECHNOLOGIES") near3 ("LLC"))).AS,AANM.	USPAT	OR	OFF	2020/11/16 15:16
L4	157	(fiber adj3 optic$4 adj5 network) and (fiber adj2 optic$2 adj3 enclosure) and (cable adj5 spool)and (adapter)and(cable with spool)	US-PGPUB; USPAT; USOCR; FPRS; EPO; JPO; DERWENT; IBM_TDB	OR	OFF	2020/11/16 15:23
L5	21	(optical adj2 connector)same(rotat$4)same(cable adj5 spool)	US-PGPUB; USPAT; USOCR; FPRS; EPO; JPO; DERWENT; IBM_TDB	OR	OFF	2020/11/16 15:25
L6	6,230	(cable adj3 spool)and(rotat$4)and (connect$4)	US-PGPUB; USPAT; USOCR; FPRS; EPO; JPO; DERWENT; IBM_TDB	OR	OFF	2020/11/16 15:27
L7	708	(first adj2 optic adj2 connector)and (second adj2 optic adj2 connector)	US-PGPUB; USPAT; USOCR; FPRS; EPO; JPO;	OR	OFF	2020/11/16 15:29

			DERWENT; IBM_TDB			
L8	7,136	(cable adj3 spool)and(rotat$4)	US-PGPUB; USPAT; USOCR; FPRS; EPO; JPO; DERWENT; IBM_TDB	OR	OFF	2020/11/16 15:31
L9	0	4 and 5 and 6 and 7 and 8	US-PGPUB; USPAT; USOCR; FPRS; EPO; JPO; DERWENT; IBM_TDB	OR	OFF	2020/11/16 15:40
L10	642	2 and 6	US-PGPUB; USPAT; USOCR; FPRS; EPO; JPO; DERWENT; IBM_TDB	OR	OFF	2020/11/16 15:47
L11	20	2 and 6 and 7	US-PGPUB; USPAT; USOCR; FPRS; EPO; JPO; DERWENT; IBM_TDB	OR	OFF	2020/11/16 15:47
L12	20	8 and 11	US-PGPUB; USPAT; USOCR; FPRS; EPO; JPO; DERWENT; IBM_TDB	OR	OFF	2020/11/16 15:48

11/16/2020 3:52:28 PM

EAST Search History

EAST Search History (Prior Art)

Ref #	Hits	Search Query	DBs	Default Operator	Plurals	Time Stamp
L1	3	"15875605"	US-PGPUB; USPAT; USOCR; FPRS; EPO; JPO; DERWENT; IBM_TDB	OR	OFF	2020/11/16 15:13
L2	34,480	(G02B6/3897; G02B6/4441; G02B6/4446; G02B6/445; G02B6/4452; G02B6/4453; G02B6/4454; G02B6/4457; G02B6/4471; G02B6/46).cpc.	US-PGPUB; USPAT; USOCR; FPRS; EPO; JPO; DERWENT; IBM_TDB	OR	OFF	2020/11/16 15:14
L3	1,306	((("COMMSCOPE") near3 ("TECHNOLOGIES") near3 ("LLC"))).AS,AANM.	USPAT	OR	OFF	2020/11/16 15:16
L4	157	(fiber adj3 optic$4 adj5 network) and (fiber adj2 optic$2 adj3 enclosure) and (cable adj5 spool)and (adapter)and(cable with spool)	US-PGPUB; USPAT; USOCR; FPRS; EPO; JPO; DERWENT; IBM_TDB	OR	OFF	2020/11/16 15:23
L5	21	(optical adj2 connector)same(rotat$4)same(cable adj5 spool)	US-PGPUB; USPAT; USOCR; FPRS; EPO; JPO; DERWENT; IBM_TDB	OR	OFF	2020/11/16 15:25
L6	6,230	(cable adj3 spool)and(rotat$4)and (connect$4)	US-PGPUB; USPAT; USOCR; FPRS; EPO; JPO; DERWENT; IBM_TDB	OR	OFF	2020/11/16 15:27
L7	708	(first adj2 optic adj2 connector)and (second adj2 optic adj2 connector)	US-PGPUB; USPAT; USOCR; FPRS; EPO; JPO;	OR	OFF	2020/11/16 15:29

			DERWENT; IBM_TDB			
L8	7,136	(cable adj3 spool)and(rotat$4)	US-PGPUB; USPAT; USOCR; FPRS; EPO; JPO; DERWENT; IBM_TDB	OR	OFF	2020/11/16 15:31
L9	0	4 and 5 and 6 and 7 and 8	US-PGPUB; USPAT; USOCR; FPRS; EPO; JPO; DERWENT; IBM_TDB	OR	OFF	2020/11/16 15:40
L10	642	2 and 6	US-PGPUB; USPAT; USOCR; FPRS; EPO; JPO; DERWENT; IBM_TDB	OR	OFF	2020/11/16 15:47
L11	20	2 and 6 and 7	US-PGPUB; USPAT; USOCR; FPRS; EPO; JPO; DERWENT; IBM_TDB	OR	OFF	2020/11/16 15:47
L12	20	8 and 11	US-PGPUB; USPAT; USOCR; FPRS; EPO; JPO; DERWENT; IBM_TDB	OR	OFF	2020/11/16 15:48
L21	19	("20020117571" | "20020125800" | "20040129522" | "20050036587" | "20060006038" | "20060126883" | "3585324" | "4138177" | "4880182" | "4989582" | "5641067" | "5733141" | "6243526" | "6442240" | "6456773" | "6631237" | "6926130" | "7190767" | "7399198").PN.	US-PGPUB; USPAT	OR	OFF	2020/11/16 16:01
L22	21	("2006/0006038").URPN.	USPAT	OR	OFF	2020/11/16 16:02
L23	18	("2004/0129522").URPN.	USPAT	OR	OFF	2020/11/16 16:03

L24	3	("2006/0126883").URPN.	USPAT	OR	OFF	2020/11/16 16:04

11/16/2020 4:05:38 PM

Doc code: IDS
Doc description: Information Disclosure Statement (IDS) Filed

PTO/SB/08a (02-18)
Approved for use through 11/30/2020. OMB 0651-0031
U.S. Patent and Trademark Office; U.S. DEPARTMENT OF COMMERCE
Under the Paperwork Reduction Act of 1995, no persons are required to respond to a collection of information unless it contains a valid OMB control number.

INFORMATION DISCLOSURE STATEMENT BY APPLICANT

(Not for submission under 37 CFR 1.99)

Application Number	15875605
Filing Date	2018-01-19
First Named Inventor	Scott C. Kowalczyk
Art Unit	2874
Examiner Name	Ullah, Akm E.
Attorney Docket Number	02316.2584US23/ADC003176

U.S.PATENTS Remove

Examiner Initial*	Cite No	Patent Number	Kind Code[1]	Issue Date	Name of Patentee or Applicant of cited Document	Pages,Columns,Lines where Relevant Passages or Relevant Figures Appear
	1	3585324		1971-06-15	Renndorfer et al.	
	2	4138177		1979-02-06	van Valer	
	3	4880182		1989-11-14	Gelfman	
	4	4989582		1991-02-05	Sakiyama et al.	
	5	5641067		1997-06-24	Ellis	
	6	5733141		1998-03-31	Penrod	
	7	6243526	B1	2001-06-05	Garibay et al.	
	8	6442240	B1	2002-08-27	Otto	

INFORMATION DISCLOSURE STATEMENT BY APPLICANT (Not for submission under 37 CFR 1.99)		
	Application Number	15875605
	Filing Date	2018-01-19
	First Named Inventor	Scott C. Kowalczyk
	Art Unit	2874
	Examiner Name	Ullah, Akm E.
	Attorney Docket Number	02316.2584US23/ADC003176

	9	6456773	B1	2002-09-24	Keys	
	10	6631237	B2	2003-10-07	Knudsen et al.	
	11	6926130	B2	2005-08-09	Skowronski	
	12	7190767	B2	2007-03-13	Kracker et al.	
	13	7399198	B2	2008-07-15	Thalheimer et al.	

If you wish to add additional U.S. Patent citation information please click the Add button. Add

U.S.PATENT APPLICATION PUBLICATIONS Remove

Examiner Initial*	Cite No	Publication Number	Kind Code[1]	Publication Date	Name of Patentee or Applicant of cited Document	Pages,Columns,Lines where Relevant Passages or Relevant Figures Appear
	1	20020117571	A1	2002-08-29	Scott et al.	
	2	20020125800	A1	2002-09-12	Knudsen et al.	
	3	20040129522	A1	2004-07-08	Skowronski	
	4	20050036587	A1	2005-02-17	Kracker et al.	

INFORMATION DISCLOSURE STATEMENT BY APPLICANT (Not for submission under 37 CFR 1.99)		
	Application Number	15875605
	Filing Date	2018-01-19
	First Named Inventor	Scott C. Kowalczyk
	Art Unit	2874
	Examiner Name	Ullah, Akm E.
	Attorney Docket Number	02316.2584US23/ADC003176

	5	20060006038	A1	2006-01-12	Beverlin	
	6	20060126883	A1	2006-06-15	Thalheimer et al.	

If you wish to add additional U.S. Published Application citation information please click the Add button. Add

FOREIGN PATENT DOCUMENTS Remove

Examiner Initial*	Cite No	Foreign Document Number[3]	Country Code[2]	Kind Code[4]	Publication Date	Name of Patentee or Applicant of cited Document	Pages,Columns,Lines where Relevant Passages or Relevant Figures Appear	T[5]
	1							

If you wish to add additional Foreign Patent Document citation information please click the Add button Add

NON-PATENT LITERATURE DOCUMENTS Remove

Examiner Initials*	Cite No	Include name of the author (in CAPITAL LETTERS), title of the article (when appropriate), title of the item (book, magazine, journal, serial, symposium, catalog, etc), date, pages(s), volume-issue number(s), publisher, city and/or country where published.	T[5]
	1		

If you wish to add additional non-patent literature document citation information please click the Add button Add

EXAMINER SIGNATURE

Examiner Signature	/AKM E ULLAH/	Date Considered	11/16/2020

*EXAMINER: Initial if reference considered, whether or not citation is in conformance with MPEP 609. Draw line through a citation if not in conformance and not considered. Include copy of this form with next communication to applicant.

[1] See Kind Codes of USPTO Patent Documents at www.USPTO.GOV or MPEP 901.04. [2] Enter office that issued the document, by the two-letter code (WIPO Standard ST.3). [3] For Japanese patent documents, the indication of the year of the reign of the Emperor must precede the serial number of the patent document. [4] Kind of document by the appropriate symbols as indicated on the document under WIPO Standard ST.16 if possible. [5] Applicant is to place a check mark here if English language translation is attached.

INFORMATION DISCLOSURE STATEMENT BY APPLICANT (Not for submission under 37 CFR 1.99)		
	Application Number	15875605
	Filing Date	2018-01-19
	First Named Inventor	Scott C. Kowalczyk
	Art Unit	2874
	Examiner Name	Ullah, Akm E.
	Attorney Docket Number	02316.2584US23/ADC003176

CERTIFICATION STATEMENT

Please see 37 CFR 1.97 and 1.98 to make the appropriate selection(s):

That each item of information contained in the information disclosure statement was first cited in any communication from a foreign patent office in a counterpart foreign application not more than three months prior to the filing of the information disclosure statement. See 37 CFR 1.97(e)(1).

OR

☐ That no item of information contained in the information disclosure statement was cited in a communication from a foreign patent office in a counterpart foreign application, and, to the knowledge of the person signing the certification after making reasonable inquiry, no item of information contained in the information disclosure statement was known to any individual designated in 37 CFR 1.56(c) more than three months prior to the filing of the information disclosure statement. See 37 CFR 1.97(e)(2).

See attached certification statement.

The fee set forth in 37 CFR 1.17 (p) has been submitted herewith.

A certification statement is not submitted herewith.

SIGNATURE

A signature of the applicant or representative is required in accordance with CFR 1.33, 10.18. Please see CFR 1.4(d) for the form of the signature.

Signature	/Julie K. Skoge/	Date (YYYY-MM-DD)	2020-08-24
Name/Print	Julie K. Skoge	Registration Number	63,431

This collection of information is required by 37 CFR 1.97 and 1.98. The information is required to obtain or retain a benefit by the public which is to file (and by the USPTO to process) an application. Confidentiality is governed by 35 U.S.C. 122 and 37 CFR 1.14. This collection is estimated to take 1 hour to complete, including gathering, preparing and submitting the completed application form to the USPTO. Time will vary depending upon the individual case. Any comments on the amount of time you require to complete this form and/or suggestions for reducing this burden, should be sent to the Chief Information Officer, U.S. Patent and Trademark Office, U.S. Department of Commerce, P.O. Box 1450, Alexandria, VA 22313-1450. DO NOT SEND FEES OR COMPLETED FORMS TO THIS ADDRESS. **SEND TO: Commissioner for Patents, P.O. Box 1450, Alexandria, VA 22313-1450.**

Privacy Act Statement

The Privacy Act of 1974 (P.L. 93-579) requires that you be given certain information in connection with your submission of the attached form related to a patent application or patent. Accordingly, pursuant to the requirements of the Act, please be advised that: (1) the general authority for the collection of this information is 35 U.S.C. 2(b)(2); (2) furnishing of the information solicited is voluntary; and (3) the principal purpose for which the information is used by the U.S. Patent and Trademark Office is to process and/or examine your submission related to a patent application or patent. If you do not furnish the requested information, the U.S. Patent and Trademark Office may not be able to process and/or examine your submission, which may result in termination of proceedings or abandonment of the application or expiration of the patent.

The information provided by you in this form will be subject to the following routine uses:

1. The information on this form will be treated confidentially to the extent allowed under the Freedom of Information Act (5 U.S.C. 552) and the Privacy Act (5 U.S.C. 552a). Records from this system of records may be disclosed to the Department of Justice to determine whether the Freedom of Information Act requires disclosure of these record s.

2. A record from this system of records may be disclosed, as a routine use, in the course of presenting evidence to a court, magistrate, or administrative tribunal, including disclosures to opposing counsel in the course of settlement negotiations.

3. A record in this system of records may be disclosed, as a routine use, to a Member of Congress submitting a request involving an individual, to whom the record pertains, when the individual has requested assistance from the Member with respect to the subject matter of the record.

4. A record in this system of records may be disclosed, as a routine use, to a contractor of the Agency having need for the information in order to perform a contract. Recipients of information shall be required to comply with the requirements of the Privacy Act of 1974, as amended, pursuant to 5 U.S.C. 552a(m).

5. A record related to an International Application filed under the Patent Cooperation Treaty in this system of records may be disclosed, as a routine use, to the International Bureau of the World Intellectual Property Organization, pursuant to the Patent Cooperation Treaty.

6. A record in this system of records may be disclosed, as a routine use, to another federal agency for purposes of National Security review (35 U.S.C. 181) and for review pursuant to the Atomic Energy Act (42 U.S.C. 218(c)).

7. A record from this system of records may be disclosed, as a routine use, to the Administrator, General Services, or his/her designee, during an inspection of records conducted by GSA as part of that agency's responsibility to recommend improvements in records management practices and programs, under authority of 44 U.S.C. 2904 and 2906. Such disclosure shall be made in accordance with the GSA regulations governing inspection of records for this purpose, and any other relevant (i.e., GSA or Commerce) directive. Such disclosure shall not be used to make determinations about individuals.

8. A record from this system of records may be disclosed, as a routine use, to the public after either publication of the application pursuant to 35 U.S.C. 122(b) or issuance of a patent pursuant to 35 U.S.C. 151. Further, a record may be disclosed, subject to the limitations of 37 CFR 1.14, as a routine use, to the public if the record was filed in an application which became abandoned or in which the proceedings were terminated and which application is referenced by either a published application, an application open to public inspections or an issued patent.

9. A record from this system of records may be disclosed, as a routine use, to a Federal, State, or local law enforcement agency, if the USPTO becomes aware of a violation or potential violation of law or regulation.

PTO/SB/08a (02-18)
Approved for use through 11/30/2020. OMB 0651-0031
U.S. Patent and Trademark Office; U.S. DEPARTMENT OF COMMERCE
Under the Paperwork Reduction Act of 1995, no persons are required to respond to a collection of information unless it contains a valid OMB control number.

INFORMATION DISCLOSURE STATEMENT BY APPLICANT

(Not for submission under 37 CFR 1.99)

Application Number	15875605
Filing Date	2018-01-19
First Named Inventor	Scott C. Kowalczyk
Art Unit	2874
Examiner Name	Ullah, Akm E.
Attorney Docket Number	02316.2584US23/ADC003176

U.S.PATENTS Remove

Examiner Initial*	Cite No	Patent Number	Kind Code[1]	Issue Date	Name of Patentee or Applicant of cited Document	Pages,Columns,Lines where Relevant Passages or Relevant Figures Appear
	1	3585324		1971-06-15	Renndorfer et al.	
	2	4138177		1979-02-06	van Valer	
	3	4880182		1989-11-14	Gelfman	
	4	4989582		1991-02-05	Sakiyama et al.	
	5	5641067		1997-06-24	Ellis	
	6	5733141		1998-03-31	Penrod	
	7	6243526	B1	2001-06-05	Garibay et al.	
	8	6442240	B1	2002-08-27	Otto	

INFORMATION DISCLOSURE STATEMENT BY APPLICANT (Not for submission under 37 CFR 1.99)	Application Number	15875605
	Filing Date	2018-01-19
	First Named Inventor	Scott C. Kowalczyk
	Art Unit	2874
	Examiner Name	Ullah, Akm E.
	Attorney Docket Number	02316.2584US23/ADC003176

	9	6456773	B1	2002-09-24	Keys	
	10	6631237	B2	2003-10-07	Knudsen et al.	
	11	6926130	B2	2005-08-09	Skowronski	
	12	7190767	B2	2007-03-13	Kracker et al.	
	13	7399198	B2	2008-07-15	Thalheimer et al.	

If you wish to add additional U.S. Patent citation information please click the Add button. Add

U.S.PATENT APPLICATION PUBLICATIONS Remove

Examiner Initial*	Cite No	Publication Number	Kind Code[1]	Publication Date	Name of Patentee or Applicant of cited Document	Pages,Columns,Lines where Relevant Passages or Relevant Figures Appear
	1	20020117571	A1	2002-08-29	Scott et al.	
	2	20020125800	A1	2002-09-12	Knudsen et al.	
	3	20040129522	A1	2004-07-08	Skowronski	
	4	20050036587	A1	2005-02-17	Kracker et al.	

INFORMATION DISCLOSURE STATEMENT BY APPLICANT (Not for submission under 37 CFR 1.99)	Application Number	15875605
	Filing Date	2018-01-19
	First Named Inventor	Scott C. Kowalczyk
	Art Unit	2874
	Examiner Name	Ullah, Akm E.
	Attorney Docket Number	02316.2584US23/ADC003176

	5	20060006038	A1	2006-01-12	Beverlin	
	6	20060126883	A1	2006-06-15	Thalheimer et al.	

If you wish to add additional U.S. Published Application citation information please click the Add button. Add

FOREIGN PATENT DOCUMENTS Remove

Examiner Initial*	Cite No	Foreign Document Number[3]	Country Code[2] i	Kind Code[4]	Publication Date	Name of Patentee or Applicant of cited Document	Pages,Columns,Lines where Relevant Passages or Relevant Figures Appear	T[5]
	1							

If you wish to add additional Foreign Patent Document citation information please click the Add button Add

NON-PATENT LITERATURE DOCUMENTS Remove

Examiner Initials*	Cite No	Include name of the author (in CAPITAL LETTERS), title of the article (when appropriate), title of the item (book, magazine, journal, serial, symposium, catalog, etc), date, pages(s), volume-issue number(s), publisher, city and/or country where published.	T[5]
	1		

If you wish to add additional non-patent literature document citation information please click the Add button Add

EXAMINER SIGNATURE

Examiner Signature		Date Considered	

*EXAMINER: Initial if reference considered, whether or not citation is in conformance with MPEP 609. Draw line through a citation if not in conformance and not considered. Include copy of this form with next communication to applicant.

[1] See Kind Codes of USPTO Patent Documents at www.USPTO.GOV or MPEP 901.04. [2] Enter office that issued the document, by the two-letter code (WIPO Standard ST.3). [3] For Japanese patent documents, the indication of the year of the reign of the Emperor must precede the serial number of the patent document. [4] Kind of document by the appropriate symbols as indicated on the document under WIPO Standard ST.16 if possible. [5] Applicant is to place a check mark here if English language translation is attached.

INFORMATION DISCLOSURE STATEMENT BY APPLICANT (Not for submission under 37 CFR 1.99)	Application Number	15875605
	Filing Date	2018-01-19
	First Named Inventor	Scott C. Kowalczyk
	Art Unit	2874
	Examiner Name	Ullah, Akm E.
	Attorney Docket Number	02316.2584US23/ADC003176

CERTIFICATION STATEMENT

Please see 37 CFR 1.97 and 1.98 to make the appropriate selection(s):

That each item of information contained in the information disclosure statement was first cited in any communication from a foreign patent office in a counterpart foreign application not more than three months prior to the filing of the information disclosure statement. See 37 CFR 1.97(e)(1).

OR

☐ That no item of information contained in the information disclosure statement was cited in a communication from a foreign patent office in a counterpart foreign application, and, to the knowledge of the person signing the certification after making reasonable inquiry, no item of information contained in the information disclosure statement was known to any individual designated in 37 CFR 1.56(c) more than three months prior to the filing of the information disclosure statement. See 37 CFR 1.97(e)(2).

See attached certification statement.

The fee set forth in 37 CFR 1.17 (p) has been submitted herewith.

A certification statement is not submitted herewith.

SIGNATURE

A signature of the applicant or representative is required in accordance with CFR 1.33, 10.18. Please see CFR 1.4(d) for the form of the signature.

Signature	/Julie K. Skoge/	Date (YYYY-MM-DD)	2020-08-24
Name/Print	Julie K. Skoge	Registration Number	63,431

This collection of information is required by 37 CFR 1.97 and 1.98. The information is required to obtain or retain a benefit by the public which is to file (and by the USPTO to process) an application. Confidentiality is governed by 35 U.S.C. 122 and 37 CFR 1.14. This collection is estimated to take 1 hour to complete, including gathering, preparing and submitting the completed application form to the USPTO. Time will vary depending upon the individual case. Any comments on the amount of time you require to complete this form and/or suggestions for reducing this burden, should be sent to the Chief Information Officer, U.S. Patent and Trademark Office, U.S. Department of Commerce, P.O. Box 1450, Alexandria, VA 22313-1450. DO NOT SEND FEES OR COMPLETED FORMS TO THIS ADDRESS. **SEND TO: Commissioner for Patents, P.O. Box 1450, Alexandria, VA 22313-1450.**

Privacy Act Statement

The Privacy Act of 1974 (P.L. 93-579) requires that you be given certain information in connection with your submission of the attached form related to a patent application or patent. Accordingly, pursuant to the requirements of the Act, please be advised that: (1) the general authority for the collection of this information is 35 U.S.C. 2(b)(2); (2) furnishing of the information solicited is voluntary; and (3) the principal purpose for which the information is used by the U.S. Patent and Trademark Office is to process and/or examine your submission related to a patent application or patent. If you do not furnish the requested information, the U.S. Patent and Trademark Office may not be able to process and/or examine your submission, which may result in termination of proceedings or abandonment of the application or expiration of the patent.

The information provided by you in this form will be subject to the following routine uses:

1. The information on this form will be treated confidentially to the extent allowed under the Freedom of Information Act (5 U.S.C. 552) and the Privacy Act (5 U.S.C. 552a). Records from this system of records may be disclosed to the Department of Justice to determine whether the Freedom of Information Act requires disclosure of these record s.

2. A record from this system of records may be disclosed, as a routine use, in the course of presenting evidence to a court, magistrate, or administrative tribunal, including disclosures to opposing counsel in the course of settlement negotiations.

3. A record in this system of records may be disclosed, as a routine use, to a Member of Congress submitting a request involving an individual, to whom the record pertains, when the individual has requested assistance from the Member with respect to the subject matter of the record.

4. A record in this system of records may be disclosed, as a routine use, to a contractor of the Agency having need for the information in order to perform a contract. Recipients of information shall be required to comply with the requirements of the Privacy Act of 1974, as amended, pursuant to 5 U.S.C. 552a(m).

5. A record related to an International Application filed under the Patent Cooperation Treaty in this system of records may be disclosed, as a routine use, to the International Bureau of the World Intellectual Property Organization, pursuant to the Patent Cooperation Treaty.

6. A record in this system of records may be disclosed, as a routine use, to another federal agency for purposes of National Security review (35 U.S.C. 181) and for review pursuant to the Atomic Energy Act (42 U.S.C. 218(c)).

7. A record from this system of records may be disclosed, as a routine use, to the Administrator, General Services, or his/her designee, during an inspection of records conducted by GSA as part of that agency's responsibility to recommend improvements in records management practices and programs, under authority of 44 U.S.C. 2904 and 2906. Such disclosure shall be made in accordance with the GSA regulations governing inspection of records for this purpose, and any other relevant (i.e., GSA or Commerce) directive. Such disclosure shall not be used to make determinations about individuals.

8. A record from this system of records may be disclosed, as a routine use, to the public after either publication of the application pursuant to 35 U.S.C. 122(b) or issuance of a patent pursuant to 35 U.S.C. 151. Further, a record may be disclosed, subject to the limitations of 37 CFR 1.14, as a routine use, to the public if the record was filed in an application which became abandoned or in which the proceedings were terminated and which application is referenced by either a published application, an application open to public inspections or an issued patent.

9. A record from this system of records may be disclosed, as a routine use, to a Federal, State, or local law enforcement agency, if the USPTO becomes aware of a violation or potential violation of law or regulation.

Electronic Patent Application Fee Transmittal

Application Number:	15875605
Filing Date:	19-Jan-2018
Title of Invention:	CONNECTING SUBSCRIBERS TO A FIBER OPTIC NETWORK USING A CABLE SPOOL
First Named Inventor/Applicant Name:	Scott C. Kowalczyk
Filer:	Julie Katherine Skoge/Aimee Stevens
Attorney Docket Number:	02316.2584US23/ADC003176

Filed as Large Entity

Filing Fees for Utility under 35 USC 111(a)

Description	Fee Code	Quantity	Amount	Sub-Total in USD($)
Basic Filing:				
Pages:				
Claims:				
CLAIMS IN EXCESS OF 20	1202	1	100	100
Miscellaneous-Filing:				
Petition:				
Patent-Appeals-and-Interference:				
Post-Allowance-and-Post-Issuance:				

Description	Fee Code	Quantity	Amount	Sub-Total in USD($)
Extension-of-Time:				
Miscellaneous:				
RCE- 2ND AND SUBSEQUENT REQUEST	1820	1	1900	1900
		Total in USD ($)		**2000**

Electronic Acknowledgement Receipt

EFS ID:	40365100
Application Number:	15875605
International Application Number:	
Confirmation Number:	4897
Title of Invention:	CONNECTING SUBSCRIBERS TO A FIBER OPTIC NETWORK USING A CABLE SPOOL
First Named Inventor/Applicant Name:	Scott C. Kowalczyk
Customer Number:	142510
Filer:	Julie Katherine Skoge/Aimee Stevens
Filer Authorized By:	Julie Katherine Skoge
Attorney Docket Number:	02316.2584US23/ADC003176
Receipt Date:	24-AUG-2020
Filing Date:	19-JAN-2018
Time Stamp:	15:32:51
Application Type:	Utility under 35 USC 111(a)

Payment information:

Submitted with Payment	yes
Payment Type	CARD
Payment was successfully received in RAM	$2000
RAM confirmation Number	E20208NF33122532
Deposit Account	132725
Authorized User	Aimee Stevens

The Director of the USPTO is hereby authorized to charge indicated fees and credit any overpayment as follows:

37 CFR 1.16 (National application filing, search, and examination fees)

37 CFR 1.17 (Patent application and reexamination processing fees)

37 CFR 1.21 (Miscellaneous fees and charges)

File Listing:

Document Number	Document Description	File Name	File Size(Bytes)/ Message Digest	Multi Part /.zip	Pages (if appl.)
1	Request for Continued Examination (RCE)	2020-08-24-RCE-02316-2584US23.PDF	1349946 01666d42fc13f6eb50552e6315829bcdeb2dbf30	no	3
Warnings:					
Information:					
2		2020-08-24-AMENDMENT-02316-2584US23.PDF	426031 2f09f86654d37f4f23574c019984dd6786b7f1f8	yes	12
	Multipart Description/PDF files in .zip description				
	Document Description		**Start**	**End**	
	Applicant Arguments/Remarks Made in an Amendment		8	12	
	Claims		2	7	
	Amendment Submitted/Entered with Filing of CPA/RCE		1	1	
Warnings:					
Information:					
3	Information Disclosure Statement (IDS) Form (SB08)	2020-08-24-IDS-5-02316-2584US23.PDF	1035063 b4947e57d7e7e3608095733aa1c843e05846e677	no	5
Warnings:					
Information:					
4	Fee Worksheet (SB06)	fee-info.pdf	32669 5758169ce650e409906b465f0d2d8d0d17f076c0	no	2
Warnings:					
Information:					
		Total Files Size (in bytes):	2843709		

This Acknowledgement Receipt evidences receipt on the noted date by the USPTO of the indicated documents, characterized by the applicant, and including page counts, where applicable. It serves as evidence of receipt similar to a Post Card, as described in MPEP 503.

New Applications Under 35 U.S.C. 111
If a new application is being filed and the application includes the necessary components for a filing date (see 37 CFR 1.53(b)-(d) and MPEP 506), a Filing Receipt (37 CFR 1.54) will be issued in due course and the date shown on this Acknowledgement Receipt will establish the filing date of the application.
National Stage of an International Application under 35 U.S.C. 371
If a timely submission to enter the national stage of an international application is compliant with the conditions of 35 U.S.C. 371 and other applicable requirements a Form PCT/DO/EO/903 indicating acceptance of the application as a national stage submission under 35 U.S.C. 371 will be issued in addition to the Filing Receipt, in due course.
New International Application Filed with the USPTO as a Receiving Office
If a new international application is being filed and the international application includes the necessary components for an international filing date (see PCT Article 11 and MPEP 1810), a Notification of the International Application Number and of the International Filing Date (Form PCT/RO/105) will be issued in due course, subject to prescriptions concerning national security, and the date shown on this Acknowledgement Receipt will establish the international filing date of the application.

PTO/SB/30EFS (02-18)
Approved for use through 11/30/2020. OMB 0651-0031
U.S. Patent and Trademark Office; U.S. DEPARTMENT OF COMMERCE
Under the Paperwork Reduction Act of 1995, no persons are required to respond to a collection of information unless it contains a valid OMB control number.

REQUEST FOR CONTINUED EXAMINATION(RCE)TRANSMITTAL
(Submitted Only via EFS-Web)

Application Number	15875605	Filing Date	2018-01-19	Docket Number (if applicable)	02316.2584US23/ADC00317	Art Unit	2874
First Named Inventor	Kowalczyk			Examiner Name	Ullah, Akm E.		

This is a Request for Continued Examination (RCE) under 37 CFR 1.114 of the above-identified application.
Request for Continued Examination (RCE) practice under 37 CFR 1.114 does not apply to any utility or plant application filed prior to June 8, 1995, or to any design application. The Instruction Sheet for this form is located at WWW.USPTO.GOV

SUBMISSION REQUIRED UNDER 37 CFR 1.114

Note: If the RCE is proper, any previously filed unentered amendments and amendments enclosed with the RCE will be entered in the order in which they were filed unless applicant instructs otherwise. If applicant does not wish to have any previously filed unentered amendment(s) entered, applicant must request non-entry of such amendment(s).

☐ Previously submitted. If a final Office action is outstanding, any amendments filed after the final Office action may be considered as a submission even if this box is not checked.

- ☐ Consider the arguments in the Appeal Brief or Reply Brief previously filed on _____
- ☐ Other _____

☒ Enclosed

- ☒ Amendment/Reply
- ☒ Information Disclosure Statement (IDS)
- ☐ Affidavit(s)/ Declaration(s)
- ☐ Other _____

MISCELLANEOUS

☐ Suspension of action on the above-identified application is requested under 37 CFR 1.103(c) for a period of months _____
(Period of suspension shall not exceed 3 months; Fee under 37 CFR 1.17(i) required)

☐ Other _____

FEES

The RCE fee under 37 CFR 1.17(e) is required by 37 CFR 1.114 when the RCE is filed.
☒ The Director is hereby authorized to charge any underpayment of fees, or credit any overpayments, to Deposit Account No 132725

SIGNATURE OF APPLICANT, ATTORNEY, OR AGENT REQUIRED

X Patent Practitioner Signature
Applicant Signature

IPR2025-01119
Belden EX1023

PTO/SB/30EFS (02-18)
Approved for use through 11/30/2020. OMB 0651-0031
U.S. Patent and Trademark Office; U.S. DEPARTMENT OF COMMERCE
Under the Paperwork Reduction Act of 1995, no persons are required to respond to a collection of information unless it contains a valid OMB control number.

Signature of Registered U.S. Patent Practitioner			
Signature	/Julie K. Skoge/	Date (YYYY-MM-DD)	2020-08-24
Name	Julie K. Skoge	Registration Number	63431

This collection of information is required by 37 CFR 1.114. The information is required to obtain or retain a benefit by the public which is to file (and by the USPTO to process) an application. Confidentiality is governed by 35 U.S.C. 122 and 37 CFR 1.11 and 1.14. This collection is estimated to take 12 minutes to complete, including gathering, preparing, and submitting the completed application form to the USPTO. Time will vary depending upon the individual case. Any comments on the amount of time you require to complete this form and/or suggestions for reducing this burden, should be sent to the Chief Information Officer, U.S. Patent and Trademark Office, U.S. Department of Commerce, P.O. Box 1450, Alexandria, VA 22313-1450.

If you need assistance in completing the form, call 1-800-PTO-9199 and select option 2.

Privacy Act Statement

The Privacy Act of 1974 (P.L. 93-579) requires that you be given certain information in connection with your submission of the attached form related to a patent application or patent. Accordingly, pursuant to the requirements of the Act, please be advised that: (1) the general authority for the collection of this information is 35 U.S.C. 2(b)(2); (2) furnishing of the information solicited is voluntary; and (3) the principal purpose for which the information is used by the U.S. Patent and Trademark Office is to process and/or examine your submission related to a patent application or patent. If you do not furnish the requested information, the U.S. Patent and Trademark Office may not be able to process and/or examine your submission, which may result in termination of proceedings or abandonment of the application or expiration of the patent.

The information provided by you in this form will be subject to the following routine uses:

1. The information on this form will be treated confidentially to the extent allowed under the Freedom of Information Act (5 U.S.C. 552) and the Privacy Act (5 U.S.C. 552a). Records from this system of records may be disclosed to the Department of Justice to determine whether the Freedom of Information Act requires disclosure of these records.

2. A record from this system of records may be disclosed, as a routine use, in the course of presenting evidence to a court, magistrate, or administrative tribunal, including disclosures to opposing counsel in the course of settlement negotiations.

3. A record in this system of records may be disclosed, as a routine use, to a Member of Congress submitting a request involving an individual, to whom the record pertains, when the individual has requested assistance from the Member with respect to the subject matter of the record.

4. A record in this system of records may be disclosed, as a routine use, to a contractor of the Agency having need for the information in order to perform a contract. Recipients of information shall be required to comply with the requirements of the Privacy Act of 1974, as amended, pursuant to 5 U.S.C. 552a(m).

5. A record related to an International Application filed under the Patent Cooperation Treaty in this system of records may be disclosed, as a routine use, to the International Bureau of the World Intellectual Property Organization, pursuant to the Patent Cooperation Treaty.

6. A record in this system of records may be disclosed, as a routine use, to another federal agency for purposes of National Security review (35 U.S.C. 181) and for review pursuant to the Atomic Energy Act (42 U.S.C. 218(c)).

7. A record from this system of records may be disclosed, as a routine use, to the Administrator, General Services, or his/her designee, during an inspection of records conducted by GSA as part of that agency's responsibility to recommend improvements in records management practices and programs, under authority of 44 U.S.C. 2904 and 2906. Such disclosure shall be made in accordance with the GSA regulations governing inspection of records for this purpose, and any other relevant (i.e., GSA or Commerce) directive. Such disclosure shall not be used to make determinations about individuals.

8. A record from this system of records may be disclosed, as a routine use, to the public after either publication of the application pursuant to 35 U.S.C. 122(b) or issuance of a patent pursuant to 35 U.S.C. 151. Further, a record may be disclosed, subject to the limitations of 37 CFR 1.14, as a routine use, to the public if the record was filed in an application which became abandoned or in which the proceedings were terminated and which application is referenced by either a published application, an application open to public inspections or an issued patent.

9. A record from this system of records may be disclosed, as a routine use, to a Federal, State, or local law enforcement agency, if the USPTO becomes aware of a violation or potential violation of law or regulation.

REMARKS

This paper responds to the Office Action mailed November 18, 2019. Claims 1-24 remain pending in the application; claim 25 is newly added to accept allowable subject matter. Claims 1, 7, 8, and 20 are amended. Support for these changes can be found throughout the specification and figures. No new matter is added.

Reexamination and allowance of the pending claims are respectfully requested.

Allowable Subject Matter

Applicant thanks the Examiner for indicating that claim 23 would be allowable if rewritten in independent form including all features of the base claim and any intervening claim. Claim 23 has been so rewritten as new claim 25.

Information Disclosure Statement

Objection is made to the Information Disclosure Statements submitted in this case for not including an explanation of relevance of the cited art.

In response, Applicant notes that all submitted non-English references include either an English language abstract or a machine translation. Of course, Applicant will be happy to supply another copy of the abstract or translation if needed.

Applicant is not in possession of a chart or other document analyzing the relevance of each individual cited document. Further, Applicant notes that no such detailed analysis is required under 37 CFR 1.56. However, Applicant is open to discussing any reference on which the Examiner has questions in a telephone interview.

In general, Applicant notes that the majority of the art cited in the pending case was previously cited in the parent cases. Applicant further notes that the underlying technology, a rotatable cable spool within an enclosure, was subject to litigation and Inter Partes Review (IPR) proceedings. In an effort to comply with Applicant's duty of disclosure, the documents from these proceedings have been submitted. In further compliance with Applicant's duty of disclosure, Applicant is attempting to cite art from co-pending related prosecution. For example, the art cited in the Information Disclosure Statement being filed herewith was cited in a Notice of Allowance in copending U.S. Application No. 16/196,166.

Claim Rejection - § 103

Claims 1-24 are rejected under 35 U.S.C. 103 as being unpatentable over U.S. Patent No. 6,220,413 to Walters et al. (hereinafter "Walters") in view of U.S. Publication No. 2005/0103515 to Fuller (hereinafter "Fuller"). Applicant respectfully traverse the rejection.

Claims 1-19

The combination of Walters and Fuller does not disclose or suggest routing a connectorized end of a subscriber cable into the interior of the main housing so that a plug connector terminating the subscriber cable is disposed fully inside the main housing; and plugging the connectorized end of the subscriber cable into the adapter while the plug connector remains fully inside the main housing in combination with the other features recited in claim 1.

In Walters, a connector panel 53 is adapted to fit selectively on frame docking station 43 as shown in FIG. 6 (reproduced below) or reel docking station 47 as shown in FIG. 5 (reproduced below). See Walters, column 2, lines 57-59.

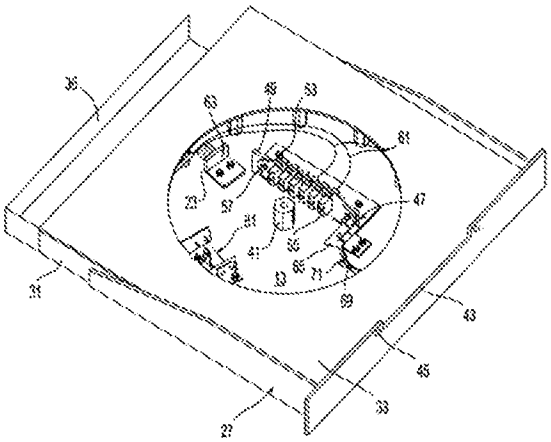

Fig. 5

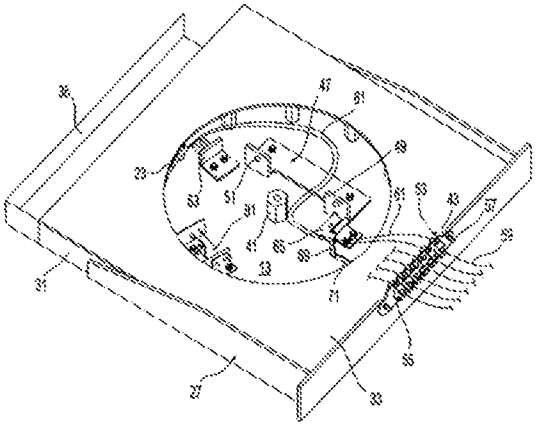

Fig. 6

At no point during the operation of Walters is a plug connector terminating line 59 ever disposed fully within the frame 27. Rather, Walter discloses that the lines 59 **must** first be removed when the connector panel 53 is placed at the reel docking station 47. See Walters, column 3, lines 22-24 (emphasis added). Accordingly, Walters teaches away from plugging the connectorized end of a line 59 into the connector panel 53 while a plug connector terminating line 59 remains fully inside the frame 27 of Walters. Further, the plug connector terminating the line 59 also is not

fully inside the frame 27 when the connector panel 53 is mounted to the frame docking station 43. See Walters, FIG. 6.

Fuller does not overcome the shortcomings of Walters. Fuller discloses a cable extending from a first coupler 39 to a second coupler 45. See Fuller, paragraph [0064]; and FIG. 4 (reproduced below). The first coupler 39 engages a receptor 15 disposed in the faceplate 17 of an enclosure 13. See Fuller, paragraph [0064]; and FIG. 3 (reproduced below). Accordingly, any subscriber line would be routed to an *exterior* of the faceplate 17 to plug into the other side of receptor 15. The plug connector terminating the subscriber line would not be disposed fully inside the enclosure 13 at any point during operation of Fuller.

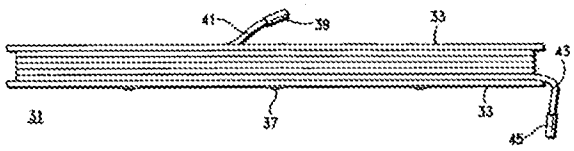

FIG.—4

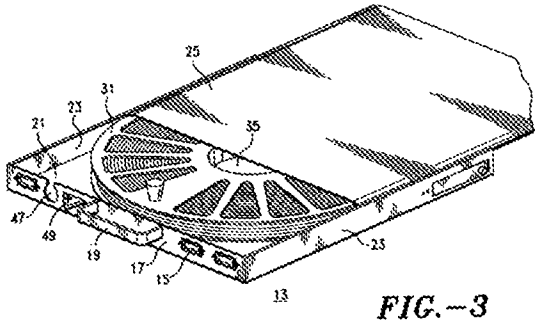

FIG.—3

For at least these reasons, Walters would not lead a person skilled in the art to the invention of claim 1, even in view of Fuller. Claims 2-19 depend from claim 1 and are allowable for at least the same reasons. Withdrawal of the rejection is respectfully requested. Applicant does not otherwise concede the correctness of the rejection and reserves the right to make additional arguments if necessary.

Claims 20-24

The combination of Walters and Fuller does not disclose or suggest optically coupling the end of the subscriber cable to the second end of the optical cable at an optical adapter disposed within the interior of the main housing while the cover is in the open position, the optical adapter being inwardly spaced from sidewalls bounding the main housing in combination with the other features recited in claim 20.

Rather, Walters discloses a connector panel 53 that is adapted to fit selectively on frame docking station 43 as shown in FIG. 6 (above) or reel docking station 47 as shown in FIG. 5 (above). See Walters, column 2, lines 57-59. According to Walters, the lines 59 **must** first be removed when the connector panel 53 is placed at the reel docking station 47. See Walters,

column 3, lines 22-24 (emphasis added). Accordingly, Walters teaches away from optically coupling the end of the subscriber cable to the second end of the optical cable at an optical adapter that is inwardly spaced from sidewalls bounding a main housing. The lines 59 of Walters are only connected to the connector panel 53 when the connector panel 53 is mounted at the sidewall of the frame 27. See Walters, FIG. 6 (above).

Fuller does not overcome the shortcomings of Walters. Fuller discloses a cable extending from a first coupler 39 to a second coupler 45. See Fuller, paragraph [0064]; and FIG. 4 (reproduced above). The first coupler 39 engages a receptor 15 disposed in the faceplate 17 of an enclosure 13. See Fuller, paragraph [0064]; and FIG. 3 (reproduced above). No reason is provided in Fuller or elsewhere to space the receptor 15 inwardly from the faceplate 17.

For at least these reasons, Walters would not lead a person skilled in the art to the invention of claim 20, even in view of Fuller. Claims 21-24 depend from claim 20 and are allowable for at least the same reasons. Withdrawal of the rejection is respectfully requested. Applicant does not otherwise concede the correctness of the rejection and reserves the right to make additional arguments if necessary.

Conclusion

In view of the above amendments and remarks, Applicant respectfully requests a Notice of Allowance. If the Examiner believes a telephone conference would advance the prosecution of this application, the Examiner is invited to telephone the undersigned at the below-listed telephone number.

Respectfully submitted,

MERCHANT & GOULD P.C.
P.O. Box 2903
Minneapolis, Minnesota 55402-0903
(612) 332-5300

Date: August 24, 2020

__/Julie K. Skoge/_____
Julie K. Skoge
Reg. No. 63,431

142510
PATENT TRADEMARK OFFICE

Amendments to the Claims:

This listing of claims will replace all prior versions and listings of claims in the application.

Listing of Claims:

1. (Currently Amended) A method of connecting a subscriber to a fiber optic network using a fiber optic enclosure, the fiber optic enclosure including a main housing, a cable spool disposed within an interior of the main housing, an adapter disposed within the interior of the main housing, and a cover that selectively provides and blocks access to the interior of the main housing, the cable spool holding at least a portion of an optical cable that includes an optical fiber extending between a first end and a second end, the first end being terminated at a first optical connector and the second end being terminated at a second optical connector, the method comprising:

paying out a portion of the optical cable from the cable spool by rotating the cable spool while the second optical connector rotates in concert with the cable spool; and

opening the cover to provide access to the interior of the main housing;

routing a connectorized end of a subscriber cable into the interior of the main housing so that a plug connector terminating the subscriber cable is disposed fully inside the main housing, the subscriber cable being different from the optical cable held on the cable spool;

plugging the connectorized end of the subscriber cable into the adapter while the plug connector remains fully inside the main housing; and

closing the cover to block access to the interior of the main housing after the subscriber cable is plugged into the adapter, wherein the adapter, the second optical connector, and the connectorized end of the subscriber cable remain disposed within the interior of the main housing when the cover is closed.

2. (Original) The method of claim 1, wherein the adapter rotates in concert with the cable spool.

3. (Original) The method of claim 1, further comprising mounting the main housing to a surface.

4. (Original) The method of claim 1, wherein paying out a portion of the optical cable includes pulling on the optical cable at the first optical connector

5. (Original) The method of claim 1, wherein the second optical connector is plugged into the adapter before paying out the portion of the optical cable.

6. (Original) The method of claim 1, further comprising optically coupling the first optical connector to the fiber optic network at a location remote from the fiber optic enclosure.

7. (Currently Amended) The method of claim [[1]]3, wherein optically coupling the first optical connector to the fiber optic network is performed before mounting the main housing to the surface.

8. (Currently Amended) The method of claim [[1]]3, wherein optically coupling the first optical connector to the fiber optic network is performed after mounting the main housing to the surface.

9. (Original) The method of claim 1, wherein opening the cover comprises pivoting the cover relative to the main housing.

10. (Original) The method of claim 1, wherein routing the connectorized end of the subscriber cable into the interior of the main housing comprises routing the connectorized end through a cable port.

11. (Original) The method of claim 10, wherein the main housing and the cover cooperate to define the cable port.

12. (Original) The method of claim 10, wherein the cable port is environmentally sealed.

13. (Original) The method of claim 12, wherein the cable port is sealed using a slitted sealing member.

14. (Original) The method of claim 12, wherein the cable port is sealed using a slitted foam member.

15. (Original) The method of claim 1, wherein the optical fiber is one of a plurality of optical fibers of the optical cable, and wherein a respective first end of each of the plurality of optical fibers is terminated at the first optical connector.

16. (Original) The method of claim 15, wherein a respective second end of each of the plurality of optical fibers is separately terminated at a respective second optical connector, each of the respective second optical connectors rotating in concert with the cable spool when the optical cable is paid out from the cable spool.

17. (Original) The method of claim 16, wherein the adapter is one of a plurality of adapters disposed within the interior of the main housing; and wherein each of the respective second optical connectors are plugged into one of the plurality of adapters.

18. (Original) The method of claim 17, wherein connectorized ends of additional subscriber cables are routed into the interior of the main housing and plugged into respective ones of the plurality of adapters when the cover is open.

19. (Original) The method of claim 1, wherein the cable spool rotates about an axis of rotation oriented to intersect the cover when the cover blocks access to the interior of the main housing.

20. (Currently Amended) A method of connecting a subscriber to a fiber optic network using a fiber optic enclosure, the fiber optical enclosure including a main housing and a cover, the main housing having opposite rear and front sides, the cover being movable relative to the main housing between an open position and a closed position, the cover blocking access to an interior

of the main housing through the front side when in the closed position and allowing access to the interior through the front side when in the open position, the method comprising:

paying out an optical cable from a cable spool disposed within the interior of the main housing, the optical cable extending between a first end and a second end, the first end being routed away from the interior of the main housing while the optical cable is being paid out, the second end rotating in unison with the cable spool within the interior of the main housing while the optical cable is being paid out;

routing an end of a subscriber cable into the interior of the main housing while the cover is in the open position;

optically coupling the end of the subscriber cable to the second end of the optical cable at an optical adapter disposed within the interior of the main housing while the cover is in the open position, the optical adapter being inwardly spaced from sidewalls bounding the main housing; and

moving the cover to the closed position to enclose the optical adapter, the end of the subscriber cable, and the second end of the cable within the interior of the main housing.

21. (Original) The method of claim 20, wherein paying out the optical cable includes pulling on the first end of the optical cable.

22. (Original) The method of claim 20, wherein the optical cable includes a plurality of optical fibers, wherein the plurality of optical fibers are connectorized at a multi-fiber connector at the first end of the optical cable; and wherein the plurality of optical fibers are individually connectorized at single-fiber connectors at the second end of the optical cable.

23. (Original) The method of claim 22, wherein the subscriber cable is one of a plurality of subscriber cables and the optical adapter is one of a plurality of optical adapters, and wherein the method further comprises:

plugging each of the single-fiber connectors into respective ones of the plurality of optical adapters within the interior of the main housing while the cover is in the open position; and

plugging connectorized ends of the subscriber cables into respective ones of the plurality of optical adapters while the cover is in the open position;

wherein moving the cover to the closed position encloses the plurality of optical adapters, the single-fiber connectors, and the connectorized ends of the plurality of subscriber cables.

24. (Original) The method of claim 20, further comprising mounting the rear side of the main housing to a wall.

25. (NEW) A method of connecting a subscriber to a fiber optic network using a fiber optic enclosure, the fiber optical enclosure including a main housing and a cover, the main housing having opposite rear and front sides, the cover being movable relative to the main housing between an open position and a closed position, the cover blocking access to an interior of the main housing through the front side when in the closed position and allowing access to the interior through the front side when in the open position, the method comprising:

paying out an optical cable from a cable spool disposed within the interior of the main housing, the optical cable extending between a first end and a second end, the first end being routed away from the interior of the main housing while the optical cable is being paid out, the second end rotating in unison with the cable spool within the interior of the main housing while the optical cable is being paid out;

routing an end of a subscriber cable into the interior of the main housing while the cover is in the open position;

optically coupling the end of the subscriber cable to the second end of the optical cable at an optical adapter disposed within the interior of the main housing while the cover is in the open position; and

moving the cover to the closed position to enclose the optical adapter, the end of the subscriber cable, and the second end of the cable within the interior of the main housing;

wherein the optical cable includes a plurality of optical fibers, wherein the plurality of optical fibers are connectorized at a multi-fiber connector at the first end of the optical cable; and wherein the plurality of optical fibers are individually connectorized at single-fiber connectors at the second end of the optical cable;

wherein the subscriber cable is one of a plurality of subscriber cables and the optical adapter is one of a plurality of optical adapters, and

wherein the method further comprises:

plugging each of the single-fiber connectors into respective ones of the plurality of optical adapters within the interior of the main housing while the cover is in the open position; and

plugging connectorized ends of the subscriber cables into respective ones of the plurality of optical adapters while the cover is in the open position;

wherein moving the cover to the closed position encloses the plurality of optical adapters, the single-fiber connectors, and the connectorized ends of the plurality of subscriber cables.

IN THE UNITED STATES PATENT AND TRADEMARK OFFICE

Inventor:	Kowalczyk et al.	Examiner:	Ullah, Akm E.
Application No.:	15/875,605	Group Art Unit:	2874
Filed:	January 19, 2018	Docket No.:	02316.2584US23/ADC003176
Title:	Connecting Subscribers to a Fiber Optic Network Using a Cable Spool (as amended)		

Filed via EFS-Web

AMENDMENT AND RESPONSE

Commissioner for Patents
P.O. Box 1450
Alexandria, Virginia 22313-1450

In response to the Office Action mailed November 18, 2019, please amend the above-identified application as follows:

Amendments to the Claims begin on page 2 of this paper.

Remarks begin on page 8 of this paper.

PTO/SB/06 (09-11)
Approved for use through 1/31/2014. OMB 0651-0032
U.S. Patent and Trademark Office; U.S. DEPARTMENT OF COMMERCE
Under the Paperwork Reduction Act of 1995, no persons are required to respond to a collection of information unless it displays a valid OMB control number.

PATENT APPLICATION FEE DETERMINATION RECORD Substitute for Form PTO-875	Application or Docket Number 15/875,605	Filing Date 01/19/2018	☐ To be Mailed

ENTITY: ☑ LARGE ☐ SMALL ☐ MICRO

APPLICATION AS FILED - PART I

FOR	(Column 1) NUMBER FILED	(Column 2) NUMBER EXTRA		RATE ($)	FEE ($)
☐ BASIC FEE (37 CFR 1.16(a), (b), or (c))	N/A	N/A		N/A	
☐ SEARCH FEE (37 CFR 1.16(k), (i), or (m))	N/A	N/A		N/A	
☐ EXAMINATION FEE (37 CFR 1.16(o), (p), or (q))	N/A	N/A		N/A	
TOTAL CLAIMS (37 CFR 1.16(i))	minus 20 =	*		x $100 =	
INDEPENDENT CLAIMS (37 CFR 1.16(h))	minus 3 =	*		x $460 =	
☐ APPLICATION SIZE FEE (37 CFR 1.16(s))	If the specification and drawings exceed 100 sheets of paper, the application size fee due is $310 ($155 for small entity) for each additional 50 sheets or fraction thereof. See 35 U.S.C. 41(a)(1)(G) and 37 CFR 1.16(s).				
☐ MULTIPLE DEPENDENT CLAIM PRESENT (37 CFR 1.16(j))					
* If the difference in column 1 is less than zero, enter "0" in column 2.				TOTAL	

APPLICATION AS AMENDED - PART II

AMENDMENT	08/24/2020	(Column 1) CLAIMS REMAINING AFTER AMENDMENT		(Column 2) HIGHEST NUMBER PREVIOUSLY PAID FOR	(Column 3) PRESENT EXTRA		RATE ($)	ADDITIONAL FEE ($)
	Total (37 CFR 1.16(i))	* 25	Minus	** 24	= 1		x $100 =	100
	Independent (37 CFR 1.16(h))	* 3	Minus	*** 3	= 0		x $460 =	0
	☐ Application Size Fee (37 CFR 1.16(s))							
	☐ FIRST PRESENTATION OF MULTIPLE DEPENDENT CLAIM (37 CFR 1.16(j))							
							TOTAL ADD'L FEE	100

AMENDMENT		(Column 1) CLAIMS REMAINING AFTER AMENDMENT		(Column 2) HIGHEST NUMBER PREVIOUSLY PAID FOR	(Column 3) PRESENT EXTRA		RATE ($)	ADDITIONAL FEE ($)
	Total (37 CFR 1.16(i))	*	Minus	**	=		x $0 =	
	Independent (37 CFR 1.16(h))	*	Minus	***	=		x $0 =	
	☐ Application Size Fee (37 CFR 1.16(s))							
	☐ FIRST PRESENTATION OF MULTIPLE DEPENDENT CLAIM (37 CFR 1.16(j))							
							TOTAL ADD'L FEE	

* If the entry in column 1 is less than the entry in column 2, write "0" in column 3.	LIE
** If the "Highest Number Previously Paid For" IN THIS SPACE is less than 20, enter "20".	/DAMALI A BERRY/
*** If the "Highest Number Previously Paid For" IN THIS SPACE is less than 3, enter "3".	
The "Highest Number Previously Paid For" (Total or Independent) is the highest number found in the appropriate box in column 1.	

This collection of information is required by 37 CFR 1.16. The information is required to obtain or retain a benefit by the public which is to file (and by the USPTO to process) an application. Confidentiality is governed by 35 U.S.C. 122 and 37 CFR 1.14. This collection is estimated to take 12 minutes to complete, including gathering, preparing, and submitting the completed application form to the USPTO. Time will vary depending upon the individual case. Any comments on the amount of time you require to complete this form and/or suggestions for reducing this burden, should be sent to the Chief Information Officer, U.S. Patent and Trademark Office, U.S. Department of Commerce, P.O. Box 1450, Alexandria, VA 22313-1450. DO NOT SEND FEES OR COMPLETED FORMS TO THIS ADDRESS. **SEND TO: Commissioner for Patents, P.O. Box 1450, Alexandria, VA 22313-1450.**

If you need assistance in completing the form, call 1-800-PTO-9199 and select option 2.

UNITED STATES PATENT AND TRADEMARK OFFICE

UNITED STATES DEPARTMENT OF COMMERCE
United States Patent and Trademark Office
Address: COMMISSIONER FOR PATENTS
P.O. Box 1450
Alexandria, Virginia 22313-1450
www.uspto.gov

APPLICATION NO.	FILING DATE	FIRST NAMED INVENTOR	ATTORNEY DOCKET NO.	CONFIRMATION NO.
15/875,605	01/19/2018	Scott C. Kowalczyk	02316.2584US23/ ADC003176	4897

142510 7590 06/23/2020
M&G CommScope
P.O. Box 2903
Minneapolis, MN 55402

EXAMINER
ULLAH, AKM E

ART UNIT	PAPER NUMBER
2874	

NOTIFICATION DATE	DELIVERY MODE
06/23/2020	ELECTRONIC

Please find below and/or attached an Office communication concerning this application or proceeding.

The time period for reply, if any, is set in the attached communication.

Notice of the Office communication was sent electronically on above-indicated "Notification Date" to the following e-mail address(es):

uspto142510@merchantgould.com

Office Action Summary	Application No. 15/875,605	Applicant(s) Kowalczyk et al.	
	Examiner Akm E Ullah	Art Unit 2874	AIA (FITF) Status No

-- The MAILING DATE of this communication appears on the cover sheet with the correspondence address --

Period for Reply

A SHORTENED STATUTORY PERIOD FOR REPLY IS SET TO EXPIRE 3 MONTHS FROM THE MAILING DATE OF THIS COMMUNICATION.

- Extensions of time may be available under the provisions of 37 CFR 1.136(a). In no event, however, may a reply be timely filed after SIX (6) MONTHS from the mailing date of this communication.
- If NO period for reply is specified above, the maximum statutory period will apply and will expire SIX (6) MONTHS from the mailing date of this communication.
- Failure to reply within the set or extended period for reply will, by statute, cause the application to become ABANDONED (35 U.S.C. § 133). Any reply received by the Office later than three months after the mailing date of this communication, even if timely filed, may reduce any earned patent term adjustment. See 37 CFR 1.704(b).

Status

1)☑ Responsive to communication(s) filed on 03/18/2019.

☐ A declaration(s)/affidavit(s) under **37 CFR 1.130(b)** was/were filed on _____.

2a)☑ This action is **FINAL.** 2b) ☐ This action is non-final.

3)☐ An election was made by the applicant in response to a restriction requirement set forth during the interview on _____; the restriction requirement and election have been incorporated into this action.

4)☐ Since this application is in condition for allowance except for formal matters, prosecution as to the merits is closed in accordance with the practice under *Ex parte Quayle*, 1935 C.D. 11, 453 O.G. 213.

Disposition of Claims*

5) ☑ Claim(s) 1-24 is/are pending in the application.

5a) Of the above claim(s) _____ is/are withdrawn from consideration.

6) ☐ Claim(s) _____ is/are allowed.

7) ☑ Claim(s) 1-22 and 24 is/are rejected.

8) ☑ Claim(s) 23 is/are objected to.

9) ☐ Claim(s) _____ are subject to restriction and/or election requirement

* If any claims have been determined allowable, you may be eligible to benefit from the **Patent Prosecution Highway** program at a participating intellectual property office for the corresponding application. For more information, please see http://www.uspto.gov/patents/init_events/pph/index.jsp or send an inquiry to **PPHfeedback@uspto.gov.**

Application Papers

10)☐ The specification is objected to by the Examiner.

11)☐ The drawing(s) filed on _____ is/are: a)☐ accepted or b)☐ objected to by the Examiner.

Applicant may not request that any objection to the drawing(s) be held in abeyance. See 37 CFR 1.85(a).

Replacement drawing sheet(s) including the correction is required if the drawing(s) is objected to. See 37 CFR 1.121(d).

Priority under 35 U.S.C. § 119

12)☐ Acknowledgment is made of a claim for foreign priority under 35 U.S.C. § 119(a)-(d) or (f).

Certified copies:

a)☐ All b)☐ Some** c)☐ None of the:

1.☐ Certified copies of the priority documents have been received.

2.☐ Certified copies of the priority documents have been received in Application No. _____.

3.☐ Copies of the certified copies of the priority documents have been received in this National Stage application from the International Bureau (PCT Rule 17.2(a)).

** See the attached detailed Office action for a list of the certified copies not received.

Attachment(s)

1) ☐ Notice of References Cited (PTO-892)

2) ☑ Information Disclosure Statement(s) (PTO/SB/08a and/or PTO/SB/08b) Paper No(s)/Mail Date _____.

3) ☐ Interview Summary (PTO-413) Paper No(s)/Mail Date _____.

4) ☐ Other: _____.

Notice of Pre-AIA or AIA Status

The present application is being examined under the pre-AIA first to invent provisions.

Detailed Action

Applicant cooperation is requested in correcting any errors of which applicant may become aware in the specification.

Status of the Application

Parent Data:

This instant US application serial number 15875605, filed 01/19/2018 and having 1 RCE-type filing therein is a continuation of 15470311, filed 03/27/2017 and having 1 RCE-type filing therein 15470311 is a continuation of 14979870, filed 12/28/2015 ,now U.S. Patent #9606319 **and having 1 RCE-type filing therein 14979870 is a continuation of 14539459, filed 11/12/2014** ,now U.S. Patent #9261666 **14539459 is a continuation of 14132691, filed 12/18/2013** ,now U.S. Patent #8891931 **14132691 is a continuation of 13924191, filed 06/21/2013** ,now U.S. Patent #8705929 **13924191 is a continuation of 13479015, filed 05/23/2012** ,now U.S. Patent #8494333 **13479015 is a continuation of 13032337, filed 02/22/2011** ,now U.S. Patent #8189984 **and having 2 RCE-type filings therein 13032337 is a continuation of 12793556, filed 06/03/2010** ,now U.S. Patent #7894701 **12793556 is a continuation of 12182705, filed 07/30/2008** ,now U.S. Patent #7756379 **and having 1 RCE-type filing therein 12182705 Claims Priority from Provisional Application 61029248, filed 02/15/2008 12182705 Claims Priority from Provisional Application 60954214, filed 08/06/2007.**

Child Data:

The application serial number 16153421, filed on 10/05/2018 and having 2 RCE-type filings therein, is a continuation of 15875605 , filed on 01/19/2018 and having 1 RCE-type filing therein.

Claims 1- 24 are pending in this application.

The Title Of The Invention is Descriptive

The new title of the invention filed on March 18, 2020 is accepted & recorded in file.

Abstract of the Disclosure

The new abstract filed on March 18, 2020 is accepted & recorded in file.

Notice re prior art available under both Pre-AIA and AIA

In the event the determination of the status of the application as subject to AIA 35 U.S.C. 102 and 103 (or as subject to pre-AIA 35 U.S.C. 102 and 103) is incorrect, any correction of the statutory basis for the rejection will not be considered a new ground of rejection if the prior art relied upon, and the rationale supporting the rejection, would be the same under either status.

Information Disclosure Statement

No Explanation of Relevance

The information disclosure statement filed 01/19/2018, 09/26/2018, 05/13/2019, 05/13/2019 and 08-05-2019 fails to include a concise explanation of the relevance.

Applicant Cited Numerous Prior Art

Applicant provided numerous prior arts in this instant application. It is requested to make a chart to distinguish over the prior and the instant claims. It is also requested to explain each reference and how it distinct form the instant application.

Objection, Allowable Subject Matter

Claim 23 is objected to as being dependent upon a rejected base claim, but would be allowable if rewritten in independent form including all of the limitations of the base claim (claim 20) and any intervening claims (intervening claim 22).

Claim Rejections - 35 USC § 103

The following is a quotation of 35 U.S.C. 103 which forms the basis for all obviousness rejections set forth in this Office action:

> A patent for a claimed invention may not be obtained, notwithstanding that the claimed invention is not identically disclosed as set forth in section 102, if the differences between the claimed invention and the prior art are such that the claimed invention as a whole would have been obvious before the effective filing date of the claimed invention to a person having ordinary skill in the art to which the claimed invention pertains. Patentability shall not be negated by the manner in which the invention was made.

This application currently names joint inventors. In considering patentability of the claims the examiner presumes that the subject matter of the various claims was

commonly owned as of the effective filing date of the claimed invention(s) absent any evidence to the contrary. Applicant is advised of the obligation under 37 CFR 1.56 to point out the inventor and effective filing dates of each claim that was not commonly owned as of the effective filing date of the later invention in order for the examiner to consider the applicability of 35 U.S.C. 102(b)(2)(C) for any potential 35 U.S.C. 102(a)(2) prior art against the later invention.

Claims 1- 22 and 24 are rejected under 35 U.S.C. 103 as being unpatentable over Walters et al.(USPNO. 6,220,413) in view of Fuller (USPub.no. 2005/ 0,103,515).

Regarding claims 1 and 20, a method of connecting a subscriber to a fiber optic network using a fiber optic enclosure (figure 5, column 1, and lines 23-31), the fiber optic enclosure including:

a main housing (27) , a cable spool (11) disposed within an interior of the main housing (27) , an adapter (connector sleeve 55 also a fiber optic adapter, see column 2, lines 57 -61) disposed within the interior of the main housing, and a cover (33) that selectively provides and blocks access to the interior of the main housing (27) , the cable spool (11) holding at least a portion of an optical cable (23) that includes an optical fiber (61) extending between a first end and a second end, the first end being terminated at a first optical connector and the second end being terminated at a second optical connector,

the method comprising: paying out a portion of the optical cable (23) from the cable spool (11) by rotating the cable spool (11) while the second optical connector

rotates in concert with the cable spool (11) ; and opening the cover (33) to provide access to the interior of the main housing (27);

routing a connectorized end of a subscriber cable into the interior of the main housing (27) ; plugging the connectorized end of the subscriber cable into the adapter ((connector sleeve 55 also a fiber optic adapter, see column 2, lines 57 -61)

; and closing the cover (33) to block access to the interior of the main housing (27) after the subscriber cable is plugged into the adapter(see paragraphs 58-61) , wherein the adapter (connector sleeve 55 also a fiber optic adapter, see column 2, lines 57 -61) , the second optical connector, and the connectorized end of the subscriber cable remain disposed within the interior of the main housing (27) when the cover(33) is closed.

Fuller disclose a fiber optic cable enclosure (13, figure 3), a cable reel/spool 31 which is disposed for rotation on the enclosure 13 with a vertical axis of rotation that can rotate with a predetermined spacing from the walls of surrounding enclosure. Note that the reel (31) includes a pair of horizontally oriented parallel side plates (33) extending from opposite sides of a central circular hub (35).

Fuller also discloses a coupler (39) secured to a first end (41) of the cable(see column 11, lines 1-12) that is disposed proximate to the central circular hub (35) of the reel when the cable is wound on the reel around the hub. The first end (41) is “secured within the central hub when the cable is wound on the reel.” The coupler (39) is “formed to engage a receptor 15 disposed on the faceplate 17 of the enclosure 13. The opposite end of the cable from the first end, i.e., the second end (43) of the cable, has a coupler (45) secured thereto for engaging a remotely located receptor.

Fuller further teaches (see under summary of the invention, column 11, lines 13-37) at least one coupler is secured to a first or fixed end of a cable disposed proximate to the central hub of the reel when cable is wound on the reel around the hub. The coupler is formed to engage a receptor disposed in the face plate of the enclosure. The opposite end of the cable from the first fixed end is a second or free end of the cable and has a coupler secured thereto for engaging a remotely located receptor and at least one receptor is disposed in the faceplate panel for receiving male and female couplers. An opening is formed in the faceplate panel within which the second free end of the cable can be disposed for extraction therethrough.

It would have been obvious to one of ordinary skill in the art before the effective filling date of the claimed invention to modify the invention **of Walter et al in view of Fuller et al.** by including applying out an optical cable spool disposed within the interior of the main housing the optical cable extending between a first end and a second end, the first end being routed away from the interior of the main housing while the optical cable is paying out, **since** the invention provides a new method, apparatus, and design of construction for an improved every day, special application, or emergency fiber optic cable reel enclosure, wherein the same can be utilized to more perfectly perform its function. The **reel system** can also be used for non-emergency deployment and a new and improved emergency fiber optic cable storage enclosure which has many of the advantages of the prior art of cable reel enclosures mentioned and described above, and many novel features and advantages that result in a new emergency fiber optic cable enclosure for adoption, which meets the existing design criteria and is not anticipated, rendered obvious, suggested, or even implied by any of

the prior art of cable reel enclosures heretofore known, either alone or in any combination thereof.

Regarding claim 2, . The method of claim 1, wherein the adapter (column 2, lines 57 – 61) rotates in concert with the cable spool (11).

Regarding claim 3, further comprising mounting the main housing to a surface.

It would have been an obvious matter of design choice to mount the main housing to a surface since applicant has not disclose that gives/ solves any stated problem or is for any particular purpose and it appears that the invention would perform equally well with the fiber optic network in the fiber optic cable enclosure.

Regarding claim 4, wherein paying out a portion of the optical cable includes pulling on the optical cable at the first optical connector.

Regarding claim 5, wherein the second optical connector is plugged into the adapter before paying out the portion of the optical cable.

Regarding claim 6, further comprising optically coupling the first optical connector to the fiber optic network at a location remote from the fiber optic enclosure.

It would have been obvious to one of ordinary skill in the art at the time the invention was made to use further optically coupling the first optical connector to the fiber optic network at a location remote from the fiber optic enclosure, since it has been held that constructing a formerly integral structure in various elements involves only routine skill in the art. *In re Dulberg, 289 F.2d 522, 523, 129 USPQ 348, 349 (CCPA 1961); Nerwin v. Erlichman,* 168 USPQ 177, 179.

Regarding claim 7, the method of claim 7, wherein optically coupling the first optical connector to the fiber optic network is performed before mounting the main housing to the surface.
It would have been obvious to one of ordinary skill in the art at the time the invention was made to use further optically coupling the first optical connector to the fiber optic network performed before mounting the main housing to the surface , since it has been held that constructing a formerly integral structure in various elements involves only routine skill in the art. *In re Dulberg, 289 F.2d 522, 523, 129 USPQ 348, 349 (CCPA 1961); Nerwin v. Erlichman,* 168 USPQ 177, 179.

Regarding claim 8, wherein optically coupling the first optical connector to the fiber optic network is performed after mounting the main housing to the surface.

It would have been obvious to one of ordinary skill in the art at the time the invention was made to an optically coupling the first optical connector to the fiber optic network is performed after mounting the main housing to the surface, since it has been held that making a such fiber optic enclosure without producing any new and unexpected result involves only routine skill in the art. In re Lindberg, 93 USPQ 23 (CCPA1952).

Regarding claim 9, wherein opening the cover comprises pivoting the cover relative to the main housing.
It would have been obvious to one of ordinary skill in the art at the time the invention was made to open the cover comprises pivoting the cover relative to the main housing, since it has been held that making a such fiber optic enclosure without producing any new and unexpected result involves only routine skill in the art. In re Lindberg, 93 USPQ 23 (CCPA1952).

Regarding claim 10, wherein routing the connectorized end of the subscriber cable into the interior of the main housing comprises routing the connectorized end through a cable port.

It is an inherent teachings of the Walters et al and Fuller et al. references.

Regarding claim 11 wherein the main housing and the cover cooperate to define the cable port. It is an inherent teachings of the Walters et al and Fuller et al. references.

Regarding claim 13, wherein the cable port is environmentally sealed.
It would have been obvious to one of ordinary skill in the art at the time of the invention was made to use the teachings of Fuller et al (USPNO. 6,933,441) in Walter et al (USPNO. 6,220,413) since it is considered to be an obvious design choice to any such cable port is environmentally sealed . In re Rose, 105 USPQ 237 (CCPA 1955).

Regarding claim 14, wherein the cable port is sealed using a slitted sealing member.

It would have been obvious to one of ordinary skill in the art at the time of the invention was made to use the teachings of Fuller et al (USPNO. 6,933,441) in Walter et al (USPNO. 6,220,413) since it is considered to be an obvious design choice to any such cable port is sealed using a slitted sealing member. In re Rose, 105 USPQ 237 (CCPA 1955).

Regarding claim 15, wherein the cable port is sealed using a slitted foam member.
It would have been obvious to one of ordinary skill in the art at the time of the invention was made to use the teachings of Fuller et al (USPNO. 6,933,441) in Walter et al (USPNO. 6,220,413) since it is considered to be an obvious design choice to any such cable port is sealed using a slitted foam member . In re Rose, 105 USPQ 237 (CCPA 1955).

Regarding claim 16, wherein the optical fiber is one of a plurality of optical fibers of the optical cable, and wherein a respective first end of each of the plurality of optical fibers is terminated at the first optical connector.

Regarding claim 17, wherein a respective second end of each of the plurality of optical fibers is separately terminated at a respective second optical connector, each of the respective second optical connectors rotating in concert with the cable spool when the optical cable is paid out from the cable spool.

Regarding claim 16, wherein the adapter is one of a plurality of adapters disposed within the interior of the main housing; and wherein each of the respective second optical connectors are plugged into one of the plurality of adapters.

Regarding claim 17, wherein connectorized ends of additional subscriber cables are routed into the interior of the main housing and plugged into respective ones of the plurality of adapters when the cover is open.

Regarding claim 18, wherein the cable spool rotates about an axis of rotation oriented to intersect the cover when the cover blocks access to the interior of the main housing.

Regarding claim 19, a method of connecting a subscriber to a fiber optic network using a fiber optic enclosure, the fiber optical enclosure including a main housing and a cover, the main housing having opposite rear and front sides, the cover being movable relative to the main housing between an open position and a closed position, the cover blocking access to an interior of the main housing through the front side when in the closed position and allowing access to the interior through the front side when in the open position, the method comprising: paying out an optical cable from a cable spool disposed within the interior of the main housing, the optical cable extending between a first end and a second end, the first end being routed away from the interior of the main housing while the optical cable is being paid out, the second end rotating in unison with the cable spool within the interior of the main housing while the optical cable is being paid out; routing an end of a subscriber cable into the interior of the main housing while the cover is in the open position; optically coupling the end of the subscriber cable to the second end of the optical cable at an optical adapter disposed within the interior of the main housing while the cover is in the open position; and moving the cover to the closed position to enclose the optical adapter, the end of the subscriber cable, and the second end of the cable within the interior of the main housing.

See above explanation as explained for claim 1 and 20

Regarding claim 21, wherein paying out the optical cable includes pulling on the first end of the optical cable.

Regarding claim 22, as to claim 20 wherein the optical cable includes a plurality of optical fibers, wherein the plurality of optical fibers are connectorized at a multi-fiber connector at the first end of the optical cable; and wherein the plurality of optical fibers are individually connectorized at single-fiber connectors at the second end of the optical cable.

Regarding claim 24, as to claim 20 further comprising mounting the rear side of the main housing to a wall.

It is an inherent teachings of the Walters et al and Fuller et al. references.

EXAMINERS NOTE: A reference to specific paragraphs, columns, pages, or figures in a cited prior art reference is not limited to preferred embodiments or any specific examples. It is well settled that a prior art reference, in its entirety, must be considered for all that it expressly teaches and fairly suggests to one having ordinary skill in the art. Stated differently, a prior art disclosure reading on a limitation of Applicant's claim cannot be ignored on the ground that other embodiments disclosed were instead cited. Therefore, the Examiner's citation to a specific portion of a single prior art reference is not intended to exclusively dictate, but rather, to demonstrate an exemplary disclosure commensurate with the specific limitations being addressed. In re Heck, 699 F.2d 1331, 1332-33,216 USPQ 1038, 1039 (Fed. Cir. 1983) (quoting In re Lemelson, 397 F.2d 1006, 1009, 158 USPQ 275, 277 (CCPA 1968)). In re: Upsher-Smith Labs. v. Pamlab, LLC, 412 F.3d 1319, 1323, 75 USPQ2d 1213, 1215 (Fed. Cir. 2005); In re Fritch, 972 F.2d 1260, 1264, 23 USPQ2d 1780, 1782 (Fed. Cir. 1992); Merck & Co. v. Biocraft Labs., Inc., 874 F.2d 804,807, 10 USPQ2d 1843, 1846 (Fed. Cir. 1989); In re Fracalossi, 681 F.2d 792,794 n.1,215 USPQ 569, 570 n.1 (CCPA 1982); In re Lamberti, 545 F.2d 747, 750, 192 USPQ 278,280 (CCPA 1976); In re Bozek, 416 F.2d 1385, 1390, 163 USPQ 545, 549 (CCPA 1969).

Arguments Are Not Persuasive

Applicant's arguments filed March 18 - 2020 have been fully considered but they are not persuasive.

(1) Applicant argues that

The combination of Walters and Fuller does not disclose or suggest routing a connectorized end of a subscriber cable into the interior of the main housing; plugging the connectorized end of the subscriber cable into the adapter in combination with the other features recited in claim 1.

Examiner respectfully disagree:

Examiner has met all requirements establishing a *prima facie* case: all factual findings required by *Graham* were supplied in the previous and present Actions; the references are related art, and Applicant has supplied no evidence that there is no reasonable expectation of success; all claim limitations were met in the previous and present Actions, and Applicant has merely made the allegation that the limitations are not met, and thus has not provided any evidence or argument directed to how the identified elements in the first action fail to meet the claimed limitations or to how the identified elements are otherwise distinguishable from the claimed limitations. Neither has Applicant supplied any evidence or argument addressing any failure of Examiner's application of the TSM test, pursuant to current governing law (see *KSR International Co. v. Teleflex Inc.*, 82 USPQ2d 1385 (U.S. 2007)).

(2) Applicant argues that

Fig. 6 Fuller does not overcome the shortcomings of Walters. Fuller discloses a cable extending from a first coupler 39 to a second coupler 45. See Fuller, paragraph [0064]; and FIG. 4 (reproduced below). The first coupler 39 engages a receptor 15 disposed in the faceplate 17 of an enclosure 13. See

Fuller, paragraph [0064]; and FIG. 3 (reproduced below). Accordingly, any subscriber line would be routed to an exterior of the faceplate 17 to plug into the other side of receptor 15. Accordingly, Fuller also does not disclose or suggest routing a connectorized end of a subscriber cable into the interior of a main housing.

Examiners respectfully disagree:

According to MPEP Guidelines: MPEP 2141 III. RATIONALES TO SUPPORT REJECTIONS UNDER 35 U.S.C. 103. - In determining obviousness, neither the particular motivation to make the claimed invention nor the problem the inventor is solving controls. The proper analysis is whether the claimed invention would have been obvious to one of ordinary skill in the art after consideration of all the facts. See 35 U.S.C. 103 or pre-AIA 35 U.S.C. 103(a). **Factors other than the disclosures of the cited prior art may provide a basis for concluding that it would have been obvious to one of ordinary skill in the art at the time the invention was to use any** subscriber line would be routed to an exterior of the faceplate 17 to plug into the other side of receptor 15. Thus, Fuller would have been obvious to include a routing a connectorized end of a subscriber cable into the interior of a main housing.

Applicant argues that

For at least these reasons, Walters would not lead a person skilled in the art to the invention of claim 1, even in view of Fuller. Claims 2 - 19 depend from claim 1 and are allowable for at least the same reasons. Withdrawal of the rejection is respectfully requested. Applicant does not otherwise concede the correctness of the rejection and reserves the right to make additional arguments if necessary.

Examiner respectfully disagree:

Since, applicant fails to argue in detailed for claims 2 -19. Thus, claims 2-19 would have been obvious to one of ordinary skill in the art at the time of the invention was made to use Walters in view of Fuller.

Applicant argues (regarding claims 20 - 24) as follows:

The combination of Walters and Fuller does not disclose or suggest routing an end of a subscriber cable into the interior of a main housing while a cover is in the open position; and optically coupling the end of the subscriber cable to the second end of an optical cable at an optical adapter disposed within the interior of the main housing in combination with the other features recited in claim 20.

Walters teaches away from suggest routing an end of a subscriber cable into the interior of a main housing. Further, Walters teaches away from optically coupling the end of the subscriber cable to the second end of an optical cable at an optical adapter disposed within the interior of the main housing. Fuller does not overcome the shortcomings of Walters.

Examiner respectfully disagree:

It would have been obvious to one of ordinary skill in the art before the effective filling date of the claimed invention to modify the invention **of Walter et al in view of Fuller et al.** by including applying out an optical cable spool disposed within the interior of the main housing the optical cable extending between a first end and a second end, the first end being routed away from the interior of the main housing while the optical cable is paying out, **since** the invention provides a new method, apparatus, and design of construction for an improved every day, special application, or emergency fiber optic cable reel enclosure, wherein the same can be utilized to more perfectly perform its function.

Although a specific motivation may not have been explicitly stated within one of the references, the motivation was not improper, and provided in accordance with the Teaching-Suggestion-Motivation Test (TSM). As such, Examiner's use of these facts as a motivation statement is in compliance with the requirements of the TSM test, since the Teaching-Suggestion-Motivation (TSM) test should be flexibly applied and the teaching, suggestion, or motivation need not be written within the reference. See *KSR Int'l Co. v. Teleflex Inc.*, 82 USPQ2d 1385 (US 2007); *Ortho-McNeil Pharm., Inc. v. Mylan Lab.,*

Inc., 520 F.3d 1358, 86 U.S.P.Q.2d 1196 (Fed. Cir. 2008); *Ex Parte Kubin*, 83 USPQ2d 1410 (Bd. Pat. App. & Int. 2007). **It is further noted** that "[a] person of ordinary skill in the art is also a person of ordinary creativity, not an automaton." *KSR International Co. v. Teleflex Inc.*, 82 USPQ2d 1385 (U.S. 2007).

Applicant argues that any subscriber line would be routed to an exterior of the faceplate 17 to plug into the other side of receptor 15. Accordingly, Fuller also does not disclose or suggest routing a connectorized end of a subscriber cable into the interior of a main housing. For at least these reasons, Walters would not lead a person skilled in the art to the invention of claim 20, even in view of Fuller.

Examiners respectfully disagree:

Note that applicant fails to particularly point out the limitations of claims 21 – 24. Thus, the rejection Walters in view of Fuller stand outstanding.

Action Is Final

THIS ACTION IS MADE FINAL. Applicant is reminded of the extension of time policy as set forth in 37 CFR 1.136(a).

A shortened statutory period for reply to this final action is set to expire THREE MONTHS from the mailing date of this action. In the event a first reply is filed within TWO MONTHS of the mailing date of this final action and the advisory action is not mailed until after the end of the THREE-MONTH shortened statutory period, then the

shortened statutory period will expire on the date the advisory action is mailed, and any extension fee pursuant to 37 CFR 1.136(a) will be calculated from the mailing date of the advisory action. In no event, however, will the statutory period for reply expire later than SIX MONTHS from the mailing date of this final action.

Contact Information

Any inquiry concerning this communication or earlier communications from the examiner should be directed to Akm Enayet Ullah whose telephone number is 571-272-2361. The examiner can normally be reached on Monday through Thursday from 6:30 am to 5 pm.

If attempts to reach the examiner by telephone are unsuccessful, the examiner's supervisor, Uyen-Chau Le, can be reached on 571-272-2397. The fax phone number for the organization where this application or proceeding is assigned is 571-273-8300.

Information regarding the status of an application may be obtained from the Patent Application Information Retrieval (PAIR) system. Status information for published applications may be obtained from either Private PAIR or Public PAIR. Status information for unpublished applications is available through Private PAIR only. For more information about the PAIR system, see http://pair-direct.uspto.gov. Should you have questions on access to the Private PAIR system, contact the Electronic Business Center (EBC) at 866-217-9197 (toll-free).

/**AKM E ULLAH**/
Primary Examiner, Art Unit 2874

Search Notes	Application/Control No.	Applicant(s)/Patent Under Reexamination
	15/875,605	Kowalczyk et al.
	Examiner	**Art Unit**
	Akm E Ullah	2874

CPC - Searched*		
Symbol	**Date**	**Examiner**
G02B 6/46, 445, 4441, 4457, 4446, 4471, 3897, 4452, 4453, 4453	05/02/2019	AU
G02B6/$.cpc.	05/02/2019	AU
Updated above	11/06/2019	AU
Updated above	06/17/2020	AU

CPC Combination Sets - Searched*		
Symbol	**Date**	**Examiner**

US Classification - Searched*			
Class	**Subclass**	**Date**	**Examiner**
395	130 -135	05/02/2019	AU

* See search history printout included with this form or the SEARCH NOTES box below to determine the scope of the search.

Search Notes		
Search Notes	**Date**	**Examiner**
EAST, INVENTOR and ASSIGNEE	05/02/2019	AU
Updated above	11/06/2019	AU
Updated above	06/17/2020	AU

/AKM E ULLAH/ Primary Examiner, Art Unit 2874	

Search Notes	Application/Control No.	Applicant(s)/Patent Under Reexamination
	15/875,605	Kowalczyk et al.
	Examiner	**Art Unit**
	Akm E Ullah	2874

Interference Search			
US Class/CPC Symbol	**US Subclass/CPC Group**	**Date**	**Examiner**
G02B	limited text along with it	05/02/2019	AU

/AKM E ULLAH/ Primary Examiner, Art Unit 2874	

Index of Claims	Application/Control No.	Applicant(s)/Patent Under Reexamination
	15/875,605	Kowalczyk et al.
	Examiner	**Art Unit**
	Akm E Ullah	2874

✓	Rejected	-	Cancelled	N	Non-Elected	A	Appeal
=	Allowed	÷	Restricted	I	Interference	O	Objected

CLAIMS

☑ Claims renumbered in the same order as presented by applicant ☐ CPA ☐ T.D. ☐ R.1.47

CLAIM		DATE								
Final	Original	05/02/2019	11/06/2019	06/18/2020						
	1	=	✓	✓						
	2	=	✓	✓						
	3	=	✓	✓						
	4	=	✓	✓						
	5	=	✓	✓						
	6	=	✓	✓						
	7	=	✓	✓						
	8	=	✓	✓						
	9	=	✓	✓						
	10	=	✓	✓						
	11	=	✓	✓						
	12	=	✓	✓						
	13	=	✓	✓						
	14	=	✓	✓						
	15	=	✓	✓						
	16	=	✓	✓						
	17	=	✓	✓						
	18	=	✓	✓						
	19	=	✓	✓						
	20	=	✓	✓						
	21	=	✓	✓						
	22	=	✓	✓						
	23	=	✓	O						
	24	=	✓	✓						

Doc code: IDS
Doc description: Information Disclosure Statement (IDS) Filed

PTO/SB/08a (02-18)
Approved for use through 11/30/2020. OMB 0651-0031
U.S. Patent and Trademark Office; U.S. DEPARTMENT OF COMMERCE
Under the Paperwork Reduction Act of 1995, no persons are required to respond to a collection of information unless it contains a valid OMB control number.

INFORMATION DISCLOSURE STATEMENT BY APPLICANT

(Not for submission under 37 CFR 1.99)

Application Number	15875605
Filing Date	2018-01-19
First Named Inventor	Scott C. Kowalczyk
Art Unit	2874
Examiner Name	Ullah, Akm E.
Attorney Docket Number	02316.2584US23/ADC003176

U.S.PATENTS Remove

Examiner Initial*	Cite No	Patent Number	Kind Code[1]	Issue Date	Name of Patentee or Applicant of cited Document	Pages,Columns,Lines where Relevant Passages or Relevant Figures Appear
	1	5069523		1991-12-03	Finzel et al.	
	2	6795633	B2	2004-09-21	Joseph, II	
	3	6889701	B2	2005-05-10	Kovacik et al.	

If you wish to add additional U.S. Patent citation information please click the Add button. Add

U.S.PATENT APPLICATION PUBLICATIONS Remove

Examiner Initial*	Cite No	Publication Number	Kind Code[1]	Publication Date	Name of Patentee or Applicant of cited Document	Pages,Columns,Lines where Relevant Passages or Relevant Figures Appear
	1					

If you wish to add additional U.S. Published Application citation information please click the Add button. Add

FOREIGN PATENT DOCUMENTS Remove

Examiner Initial*	Cite No	Foreign Document Number[3]	Country Code[2] i	Kind Code[4]	Publication Date	Name of Patentee or Applicant of cited Document	Pages,Columns,Lines where Relevant Passages or Relevant Figures Appear	T[5]
	1							

INFORMATION DISCLOSURE STATEMENT BY APPLICANT (Not for submission under 37 CFR 1.99)		
	Application Number	15875605
	Filing Date	2018-01-19
	First Named Inventor	Scott C. Kowalczyk
	Art Unit	2874
	Examiner Name	Ullah, Akm E.
	Attorney Docket Number	02316.2584US23/ADC003176

If you wish to add additional Foreign Patent Document citation information please click the Add button Add

NON-PATENT LITERATURE DOCUMENTS Remove

Examiner Initials*	Cite No	Include name of the author (in CAPITAL LETTERS), title of the article (when appropriate), title of the item (book, magazine, journal, serial, symposium, catalog, etc), date, pages(s), volume-issue number(s), publisher, city and/or country where published.	T[5]
	1		

If you wish to add additional non-patent literature document citation information please click the Add button Add

EXAMINER SIGNATURE

Examiner Signature	/AKM E ULLAH/	Date Considered	06/17/2020

*EXAMINER: Initial if reference considered, whether or not citation is in conformance with MPEP 609. Draw line through a citation if not in conformance and not considered. Include copy of this form with next communication to applicant.

[1] See Kind Codes of USPTO Patent Documents at www.USPTO.GOV or MPEP 901.04. [2] Enter office that issued the document, by the two-letter code (WIPO Standard ST.3). [3] For Japanese patent documents, the indication of the year of the reign of the Emperor must precede the serial number of the patent document. [4] Kind of document by the appropriate symbols as indicated on the document under WIPO Standard ST.16 if possible. [5] Applicant is to place a check mark here if English language translation is attached.

INFORMATION DISCLOSURE STATEMENT BY APPLICANT (Not for submission under 37 CFR 1.99)		
	Application Number	15875605
	Filing Date	2018-01-19
	First Named Inventor	Scott C. Kowalczyk
	Art Unit	2874
	Examiner Name	Ullah, Akm E.
	Attorney Docket Number	02316.2584US23/ADC003176

CERTIFICATION STATEMENT

Please see 37 CFR 1.97 and 1.98 to make the appropriate selection(s):

That each item of information contained in the information disclosure statement was first cited in any communication from a foreign patent office in a counterpart foreign application not more than three months prior to the filing of the information disclosure statement. See 37 CFR 1.97(e)(1).

OR

☐ That no item of information contained in the information disclosure statement was cited in a communication from a foreign patent office in a counterpart foreign application, and, to the knowledge of the person signing the certification after making reasonable inquiry, no item of information contained in the information disclosure statement was known to any individual designated in 37 CFR 1.56(c) more than three months prior to the filing of the information disclosure statement. See 37 CFR 1.97(e)(2).

See attached certification statement.

☒ The fee set forth in 37 CFR 1.17 (p) has been submitted herewith.

A certification statement is not submitted herewith.

SIGNATURE

A signature of the applicant or representative is required in accordance with CFR 1.33, 10.18. Please see CFR 1.4(d) for the form of the signature.

Signature	/Julie K. Skoge/	Date (YYYY-MM-DD)	2020-03-18
Name/Print	Julie K. Skoge	Registration Number	63,431

This collection of information is required by 37 CFR 1.97 and 1.98. The information is required to obtain or retain a benefit by the public which is to file (and by the USPTO to process) an application. Confidentiality is governed by 35 U.S.C. 122 and 37 CFR 1.14. This collection is estimated to take 1 hour to complete, including gathering, preparing and submitting the completed application form to the USPTO. Time will vary depending upon the individual case. Any comments on the amount of time you require to complete this form and/or suggestions for reducing this burden, should be sent to the Chief Information Officer, U.S. Patent and Trademark Office, U.S. Department of Commerce, P.O. Box 1450, Alexandria, VA 22313-1450. DO NOT SEND FEES OR COMPLETED FORMS TO THIS ADDRESS. **SEND TO: Commissioner for Patents, P.O. Box 1450, Alexandria, VA 22313-1450.**

Privacy Act Statement

The Privacy Act of 1974 (P.L. 93-579) requires that you be given certain information in connection with your submission of the attached form related to a patent application or patent. Accordingly, pursuant to the requirements of the Act, please be advised that: (1) the general authority for the collection of this information is 35 U.S.C. 2(b)(2); (2) furnishing of the information solicited is voluntary; and (3) the principal purpose for which the information is used by the U.S. Patent and Trademark Office is to process and/or examine your submission related to a patent application or patent. If you do not furnish the requested information, the U.S. Patent and Trademark Office may not be able to process and/or examine your submission, which may result in termination of proceedings or abandonment of the application or expiration of the patent.

The information provided by you in this form will be subject to the following routine uses:

1. The information on this form will be treated confidentially to the extent allowed under the Freedom of Information Act (5 U.S.C. 552) and the Privacy Act (5 U.S.C. 552a). Records from this system of records may be disclosed to the Department of Justice to determine whether the Freedom of Information Act requires disclosure of these record s.

2. A record from this system of records may be disclosed, as a routine use, in the course of presenting evidence to a court, magistrate, or administrative tribunal, including disclosures to opposing counsel in the course of settlement negotiations.

3. A record in this system of records may be disclosed, as a routine use, to a Member of Congress submitting a request involving an individual, to whom the record pertains, when the individual has requested assistance from the Member with respect to the subject matter of the record.

4. A record in this system of records may be disclosed, as a routine use, to a contractor of the Agency having need for the information in order to perform a contract. Recipients of information shall be required to comply with the requirements of the Privacy Act of 1974, as amended, pursuant to 5 U.S.C. 552a(m).

5. A record related to an International Application filed under the Patent Cooperation Treaty in this system of records may be disclosed, as a routine use, to the International Bureau of the World Intellectual Property Organization, pursuant to the Patent Cooperation Treaty.

6. A record in this system of records may be disclosed, as a routine use, to another federal agency for purposes of National Security review (35 U.S.C. 181) and for review pursuant to the Atomic Energy Act (42 U.S.C. 218(c)).

7. A record from this system of records may be disclosed, as a routine use, to the Administrator, General Services, or his/her designee, during an inspection of records conducted by GSA as part of that agency's responsibility to recommend improvements in records management practices and programs, under authority of 44 U.S.C. 2904 and 2906. Such disclosure shall be made in accordance with the GSA regulations governing inspection of records for this purpose, and any other relevant (i.e., GSA or Commerce) directive. Such disclosure shall not be used to make determinations about individuals.

8. A record from this system of records may be disclosed, as a routine use, to the public after either publication of the application pursuant to 35 U.S.C. 122(b) or issuance of a patent pursuant to 35 U.S.C. 151. Further, a record may be disclosed, subject to the limitations of 37 CFR 1.14, as a routine use, to the public if the record was filed in an application which became abandoned or in which the proceedings were terminated and which application is referenced by either a published application, an application open to public inspections or an issued patent.

9. A record from this system of records may be disclosed, as a routine use, to a Federal, State, or local law enforcement agency, if the USPTO becomes aware of a violation or potential violation of law or regulation.

EAST Search History

EAST Search History (Prior Art)

Ref #	Hits	Search Query	DBs	Default Operator	Plurals	Time Stamp
L1	996	((("COMMSCOPE") near3 ("TECHNOLOGIES") near3 ("LLC"))).AS,AANM.	USPAT	OR	OFF	2019/11/12 11:55
L2	228	((("KOWALCZYK") near3 ("Scott")) OR (("COAN") near3 ("Jonathan")) OR (("KAML") near3 ("Jonathan"))).INV.	US-PGPUB; USPAT; USOCR; EPO; JPO; DERWENT	OR	OFF	2019/11/12 11:59
L3	26	("1276825" | "1442999" | "1446410" | "1474580" | "2502496" | "2521226" | "2727703" | "3131729" | "3657491" | "3667417" | "3920308" | "3940086" | "4053118" | "4081258" | "4201278" | "4384688" | "4587801" | "4635875" | "4657140" | "4666237" | "4767073" | "4869437" | "4883337" | "4913369" | "4939798" | "RE20995").PN.	US-PGPUB; USPAT	OR	OFF	2019/11/12 12:03
L4	26	("2282156" | "2767426" | "3346705" | "3433579" | "3612424" | "3837448" | "3983977" | "4143746" | "4470558" | "4520239" | "4953810" | "5172841" | "5246377" | "5310356" | "5528453" | "5773757" | "5957401" | "6035032" | "6135254" | "6176559" | "6220762" | "6223675" | "6286777" | "6300877" | "6349893" | "6361360").PN.	US-PGPUB; USPAT	OR	OFF	2019/11/12 12:12
L5	26	("1276825" | "1442999" | "1446410" | "1474580" | "2502496" | "2521226" | "2727703" | "3131729" | "3657491" | "3667417" | "3920308" | "3940086" | "4053118" | "4081258" | "4201278" | "4384688" | "4587801" | "4635875" | "4657140" | "4666237" | "4767073" | "4869437" | "4883337" | "4913369" | "4939798" | "RE20995").PN.	US-PGPUB; USPAT	OR	OFF	2019/11/12 12:14
L6	20	("10234648" | "20050002633" | "20060153516" | "20140219622" | "20170235079" | "4379615" | "7065282" | "8265447" | "8818157" | "9223103" | "9310578" | "9429728" | "9453971" | "9664871" | "9684142" | "9703063" | "9766414" | "9885846" | "9995898" | "RE47307").PN.	US-PGPUB; USPAT	OR	OFF	2019/11/12 12:18

11/12/2019 12:24:05 PM

PTO/SB/06 (09-11)
Approved for use through 1/31/2014. OMB 0651-0032
U.S. Patent and Trademark Office; U.S. DEPARTMENT OF COMMERCE
Under the Paperwork Reduction Act of 1995, no persons are required to respond to a collection of information unless it displays a valid OMB control number.

PATENT APPLICATION FEE DETERMINATION RECORD Substitute for Form PTO-875	Application or Docket Number 15/875,605	Filing Date 01/19/2018	☐ To be Mailed

ENTITY: ☑ LARGE ☐ SMALL ☐ MICRO

APPLICATION AS FILED - PART I

FOR	(Column 1) NUMBER FILED	(Column 2) NUMBER EXTRA		RATE ($)	FEE ($)
☐ BASIC FEE (37 CFR 1.16(a), (b), or (c))	N/A	N/A		N/A	
☐ SEARCH FEE (37 CFR 1.16(k), (i), or (m))	N/A	N/A		N/A	
☐ EXAMINATION FEE (37 CFR 1.16(o), (p), or (q))	N/A	N/A		N/A	
TOTAL CLAIMS (37 CFR 1.16(i))	minus 20 =	*		x $100 =	
INDEPENDENT CLAIMS (37 CFR 1.16(h))	minus 3 =	*		x $460 =	
☐ APPLICATION SIZE FEE (37 CFR 1.16(s))	If the specification and drawings exceed 100 sheets of paper, the application size fee due is $310 ($155 for small entity) for each additional 50 sheets or fraction thereof. See 35 U.S.C. 41(a)(1)(G) and 37 CFR 1.16(s).				
☐ MULTIPLE DEPENDENT CLAIM PRESENT (37 CFR 1.16(j))					
* If the difference in column 1 is less than zero, enter "0" in column 2.				TOTAL	

APPLICATION AS AMENDED - PART II

AMENDMENT	03/18/2020	(Column 1) CLAIMS REMAINING AFTER AMENDMENT		(Column 2) HIGHEST NUMBER PREVIOUSLY PAID FOR	(Column 3) PRESENT EXTRA		RATE ($)	ADDITIONAL FEE ($)
	Total (37 CFR 1.16(i))	* 24	Minus	** 24	= 0		x $100 =	0
	Independent (37 CFR 1.16(h))	* 2	Minus	*** 3	= 0		x $460 =	0
	☐ Application Size Fee (37 CFR 1.16(s))							
	☐ FIRST PRESENTATION OF MULTIPLE DEPENDENT CLAIM (37 CFR 1.16(j))							
							TOTAL ADD'L FEE	0

AMENDMENT		(Column 1) CLAIMS REMAINING AFTER AMENDMENT		(Column 2) HIGHEST NUMBER PREVIOUSLY PAID FOR	(Column 3) PRESENT EXTRA		RATE ($)	ADDITIONAL FEE ($)
	Total (37 CFR 1.16(i))	*	Minus	**	=		x $0 =	
	Independent (37 CFR 1.16(h))	*	Minus	***	=		x $0 =	
	☐ Application Size Fee (37 CFR 1.16(s))							
	☐ FIRST PRESENTATION OF MULTIPLE DEPENDENT CLAIM (37 CFR 1.16(j))							
							TOTAL ADD'L FEE	

* If the entry in column 1 is less than the entry in column 2, write "0" in column 3.	LIE
** If the "Highest Number Previously Paid For" IN THIS SPACE is less than 20, enter "20".	/VINCENT S BUTLER/
*** If the "Highest Number Previously Paid For" IN THIS SPACE is less than 3, enter "3".	
The "Highest Number Previously Paid For" (Total or Independent) is the highest number found in the appropriate box in column 1.	

This collection of information is required by 37 CFR 1.16. The information is required to obtain or retain a benefit by the public which is to file (and by the USPTO to process) an application. Confidentiality is governed by 35 U.S.C. 122 and 37 CFR 1.14. This collection is estimated to take 12 minutes to complete, including gathering, preparing, and submitting the completed application form to the USPTO. Time will vary depending upon the individual case. Any comments on the amount of time you require to complete this form and/or suggestions for reducing this burden, should be sent to the Chief Information Officer, U.S. Patent and Trademark Office, U.S. Department of Commerce, P.O. Box 1450, Alexandria, VA 22313-1450. DO NOT SEND FEES OR COMPLETED FORMS TO THIS ADDRESS. **SEND TO: Commissioner for Patents, P.O. Box 1450, Alexandria, VA 22313-1450.**

If you need assistance in completing the form, call 1-800-PTO-9199 and select option 2.

PTO/SB/08a (02-18)
Approved for use through 11/30/2020. OMB 0651-0031
U.S. Patent and Trademark Office; U.S. DEPARTMENT OF COMMERCE
Under the Paperwork Reduction Act of 1995, no persons are required to respond to a collection of information unless it contains a valid OMB control number.

INFORMATION DISCLOSURE STATEMENT BY APPLICANT

(Not for submission under 37 CFR 1.99)

Application Number	15875605
Filing Date	2018-01-19
First Named Inventor	Scott C. Kowalczyk
Art Unit	2874
Examiner Name	Ullah, Akm E.
Attorney Docket Number	02316.2584US23/ADC003176

U.S.PATENTS Remove

Examiner Initial*	Cite No	Patent Number	Kind Code[1]	Issue Date	Name of Patentee or Applicant of cited Document	Pages,Columns,Lines where Relevant Passages or Relevant Figures Appear
	1	5069523		1991-12-03	Finzel et al.	
	2	6795633	B2	2004-09-21	Joseph, II	
	3	6889701	B2	2005-05-10	Kovacik et al.	

If you wish to add additional U.S. Patent citation information please click the Add button. Add

U.S.PATENT APPLICATION PUBLICATIONS Remove

Examiner Initial*	Cite No	Publication Number	Kind Code[1]	Publication Date	Name of Patentee or Applicant of cited Document	Pages,Columns,Lines where Relevant Passages or Relevant Figures Appear
	1					

If you wish to add additional U.S. Published Application citation information please click the Add button. Add

FOREIGN PATENT DOCUMENTS Remove

Examiner Initial*	Cite No	Foreign Document Number[3]	Country Code[2] i	Kind Code[4]	Publication Date	Name of Patentee or Applicant of cited Document	Pages,Columns,Lines where Relevant Passages or Relevant Figures Appear	T[5]
	1							

INFORMATION DISCLOSURE STATEMENT BY APPLICANT (Not for submission under 37 CFR 1.99)	Application Number	15875605
	Filing Date	2018-01-19
	First Named Inventor	Scott C. Kowalczyk
	Art Unit	2874
	Examiner Name	Ullah, Akm E.
	Attorney Docket Number	02316.2584US23/ADC003176

If you wish to add additional Foreign Patent Document citation information please click the Add button Add

NON-PATENT LITERATURE DOCUMENTS Remove

Examiner Initials*	Cite No	Include name of the author (in CAPITAL LETTERS), title of the article (when appropriate), title of the item (book, magazine, journal, serial, symposium, catalog, etc), date, pages(s), volume-issue number(s), publisher, city and/or country where published.	T[5]
	1		

If you wish to add additional non-patent literature document citation information please click the Add button Add

EXAMINER SIGNATURE

Examiner Signature		Date Considered	

*EXAMINER: Initial if reference considered, whether or not citation is in conformance with MPEP 609. Draw line through a citation if not in conformance and not considered. Include copy of this form with next communication to applicant.

[1] See Kind Codes of USPTO Patent Documents at www.USPTO.GOV or MPEP 901.04. [2] Enter office that issued the document, by the two-letter code (WIPO Standard ST.3). [3] For Japanese patent documents, the indication of the year of the reign of the Emperor must precede the serial number of the patent document. [4] Kind of document by the appropriate symbols as indicated on the document under WIPO Standard ST.16 if possible. [5] Applicant is to place a check mark here if English language translation is attached.

INFORMATION DISCLOSURE STATEMENT BY APPLICANT (Not for submission under 37 CFR 1.99)	Application Number	15875605
	Filing Date	2018-01-19
	First Named Inventor	Scott C. Kowalczyk
	Art Unit	2874
	Examiner Name	Ullah, Akm E.
	Attorney Docket Number	02316.2584US23/ADC003176

CERTIFICATION STATEMENT

Please see 37 CFR 1.97 and 1.98 to make the appropriate selection(s):

That each item of information contained in the information disclosure statement was first cited in any communication from a foreign patent office in a counterpart foreign application not more than three months prior to the filing of the information disclosure statement. See 37 CFR 1.97(e)(1).

OR

☐ That no item of information contained in the information disclosure statement was cited in a communication from a foreign patent office in a counterpart foreign application, and, to the knowledge of the person signing the certification after making reasonable inquiry, no item of information contained in the information disclosure statement was known to any individual designated in 37 CFR 1.56(c) more than three months prior to the filing of the information disclosure statement. See 37 CFR 1.97(e)(2).

See attached certification statement.

☒ The fee set forth in 37 CFR 1.17 (p) has been submitted herewith.

A certification statement is not submitted herewith.

SIGNATURE

A signature of the applicant or representative is required in accordance with CFR 1.33, 10.18. Please see CFR 1.4(d) for the form of the signature.

Signature	/Julie K. Skoge/	Date (YYYY-MM-DD)	2020-03-18
Name/Print	Julie K. Skoge	Registration Number	63,431

This collection of information is required by 37 CFR 1.97 and 1.98. The information is required to obtain or retain a benefit by the public which is to file (and by the USPTO to process) an application. Confidentiality is governed by 35 U.S.C. 122 and 37 CFR 1.14. This collection is estimated to take 1 hour to complete, including gathering, preparing and submitting the completed application form to the USPTO. Time will vary depending upon the individual case. Any comments on the amount of time you require to complete this form and/or suggestions for reducing this burden, should be sent to the Chief Information Officer, U.S. Patent and Trademark Office, U.S. Department of Commerce, P.O. Box 1450, Alexandria, VA 22313-1450. DO NOT SEND FEES OR COMPLETED FORMS TO THIS ADDRESS. **SEND TO: Commissioner for Patents, P.O. Box 1450, Alexandria, VA 22313-1450.**

Privacy Act Statement

The Privacy Act of 1974 (P.L. 93-579) requires that you be given certain information in connection with your submission of the attached form related to a patent application or patent. Accordingly, pursuant to the requirements of the Act, please be advised that: (1) the general authority for the collection of this information is 35 U.S.C. 2(b)(2); (2) furnishing of the information solicited is voluntary; and (3) the principal purpose for which the information is used by the U.S. Patent and Trademark Office is to process and/or examine your submission related to a patent application or patent. If you do not furnish the requested information, the U.S. Patent and Trademark Office may not be able to process and/or examine your submission, which may result in termination of proceedings or abandonment of the application or expiration of the patent.

The information provided by you in this form will be subject to the following routine uses:

1. The information on this form will be treated confidentially to the extent allowed under the Freedom of Information Act (5 U.S.C. 552) and the Privacy Act (5 U.S.C. 552a). Records from this system of records may be disclosed to the Department of Justice to determine whether the Freedom of Information Act requires disclosure of these record s.

2. A record from this system of records may be disclosed, as a routine use, in the course of presenting evidence to a court, magistrate, or administrative tribunal, including disclosures to opposing counsel in the course of settlement negotiations.

3. A record in this system of records may be disclosed, as a routine use, to a Member of Congress submitting a request involving an individual, to whom the record pertains, when the individual has requested assistance from the Member with respect to the subject matter of the record.

4. A record in this system of records may be disclosed, as a routine use, to a contractor of the Agency having need for the information in order to perform a contract. Recipients of information shall be required to comply with the requirements of the Privacy Act of 1974, as amended, pursuant to 5 U.S.C. 552a(m).

5. A record related to an International Application filed under the Patent Cooperation Treaty in this system of records may be disclosed, as a routine use, to the International Bureau of the World Intellectual Property Organization, pursuant to the Patent Cooperation Treaty.

6. A record in this system of records may be disclosed, as a routine use, to another federal agency for purposes of National Security review (35 U.S.C. 181) and for review pursuant to the Atomic Energy Act (42 U.S.C. 218(c)).

7. A record from this system of records may be disclosed, as a routine use, to the Administrator, General Services, or his/her designee, during an inspection of records conducted by GSA as part of that agency's responsibility to recommend improvements in records management practices and programs, under authority of 44 U.S.C. 2904 and 2906. Such disclosure shall be made in accordance with the GSA regulations governing inspection of records for this purpose, and any other relevant (i.e., GSA or Commerce) directive. Such disclosure shall not be used to make determinations about individuals.

8. A record from this system of records may be disclosed, as a routine use, to the public after either publication of the application pursuant to 35 U.S.C. 122(b) or issuance of a patent pursuant to 35 U.S.C. 151. Further, a record may be disclosed, subject to the limitations of 37 CFR 1.14, as a routine use, to the public if the record was filed in an application which became abandoned or in which the proceedings were terminated and which application is referenced by either a published application, an application open to public inspections or an issued patent.

9. A record from this system of records may be disclosed, as a routine use, to a Federal, State, or local law enforcement agency, if the USPTO becomes aware of a violation or potential violation of law or regulation.

Electronic Patent Application Fee Transmittal

Application Number:	15875605
Filing Date:	19-Jan-2018
Title of Invention:	FIBER OPTIC ENCLOSURE WITH INTERNAL CABLE SPOOL
First Named Inventor/Applicant Name:	Scott C. Kowalczyk
Filer:	Julie Katherine Skoge/Rebecca Krueger
Attorney Docket Number:	02316.2584US23/ADC003176

Filed as Large Entity

Filing Fees for **Utility under 35 USC 111(a)**

Description	Fee Code	Quantity	Amount	Sub-Total in USD($)
Basic Filing:				
Pages:				
Claims:				
Miscellaneous-Filing:				
Petition:				
Patent-Appeals-and-Interference:				
Post-Allowance-and-Post-Issuance:				
Extension-of-Time:				

Description	Fee Code	Quantity	Amount	Sub-Total in USD($)
Miscellaneous:				
SUBMISSION- INFORMATION DISCLOSURE STMT	1806	1	240	240
		Total in USD ($)		**240**

Electronic Acknowledgement Receipt

EFS ID:	38900942
Application Number:	15875605
International Application Number:	
Confirmation Number:	4897
Title of Invention:	FIBER OPTIC ENCLOSURE WITH INTERNAL CABLE SPOOL
First Named Inventor/Applicant Name:	Scott C. Kowalczyk
Customer Number:	142510
Filer:	Julie Katherine Skoge/Rebecca Krueger
Filer Authorized By:	Julie Katherine Skoge
Attorney Docket Number:	02316.2584US23/ADC003176
Receipt Date:	18-MAR-2020
Filing Date:	19-JAN-2018
Time Stamp:	14:14:56
Application Type:	Utility under 35 USC 111(a)

Payment information:

Submitted with Payment	yes
Payment Type	CARD
Payment was successfully received in RAM	$240
RAM confirmation Number	E20203HE16150322
Deposit Account	132725
Authorized User	Rebecca Krueger

The Director of the USPTO is hereby authorized to charge indicated fees and credit any overpayment as follows:

37 CFR 1.21 (Miscellaneous fees and charges)

File Listing:

Document Number	Document Description	File Name	File Size(Bytes)/ Message Digest	Multi Part /.zip	Pages (if appl.)
1	Information Disclosure Statement (IDS) Form (SB08)	2020-03-18-IDS-4-02316-2584US23.PDF	1034382 767d274eedddbf28286c13f88601c0eaf8e62aeb	no	4
Warnings:					
Information:					
2	Fee Worksheet (SB06)	fee-info.pdf	30814 b043c1f3948753f6076c7f092f0131a21ab1d5ac	no	2
Warnings:					
Information:					
		Total Files Size (in bytes):	1065196		

This Acknowledgement Receipt evidences receipt on the noted date by the USPTO of the indicated documents, characterized by the applicant, and including page counts, where applicable. It serves as evidence of receipt similar to a Post Card, as described in MPEP 503.

New Applications Under 35 U.S.C. 111
If a new application is being filed and the application includes the necessary components for a filing date (see 37 CFR 1.53(b)-(d) and MPEP 506), a Filing Receipt (37 CFR 1.54) will be issued in due course and the date shown on this Acknowledgement Receipt will establish the filing date of the application.
National Stage of an International Application under 35 U.S.C. 371
If a timely submission to enter the national stage of an international application is compliant with the conditions of 35 U.S.C. 371 and other applicable requirements a Form PCT/DO/EO/903 indicating acceptance of the application as a national stage submission under 35 U.S.C. 371 will be issued in addition to the Filing Receipt, in due course.
New International Application Filed with the USPTO as a Receiving Office
If a new international application is being filed and the international application includes the necessary components for an international filing date (see PCT Article 11 and MPEP 1810), a Notification of the International Application Number and of the International Filing Date (Form PCT/RO/105) will be issued in due course, subject to prescriptions concerning national security, and the date shown on this Acknowledgement Receipt will establish the international filing date of the application.

IN THE UNITED STATES PATENT AND TRADEMARK OFFICE

Inventor:	Kowalczyk et al.	Examiner:	Ullah, Akm E.
Application No.:	15/875,605	Group Art Unit:	2874
Filed:	January 19, 2018	Docket No.:	02316.2584US23/ADC003176
Title:	Connecting Subscribers to a Fiber Optic Network Using a Cable Spool (as amended)		

Filed via EFS-Web

AMENDMENT AND RESPONSE

Commissioner for Patents
P.O. Box 1450
Alexandria, Virginia 22313-1450

In response to the Office Action mailed November 18, 2019, please amend the above-identified application as follows:

Amendments to the Specification begin on page 2 of this paper.

Amendments to the Abstract begin on page 3 of this paper.

A **Listing of Claims** begins on page 4 of this paper.

Remarks begin on page 9 of this paper.

Amendments to the Specification:

Please replace the title with the following new title:

CONNECTING SUBSCRIBERS TO A FIBER OPTIC NETWORK USING A CABLE SPOOL

IPR2025-01119
Page 111 of 348
Belden EX1023

Amendments to the Abstract

Please replace the Abstract with the following new Abstract:

An enclosure for connecting a subscriber to a fiber optic network includes a rotatable cable spool disposed within a main housing. A connectorized end of a subscriber cable is routed into the main housing and plugged into an adapter disposed within the enclosure. A cover of the enclosure is closed after the subscriber cable is plugged into the adapter. Prior to connecting the subscriber cable to the adapter, an optical cable can be paid out from the cable spool. One end of the optical cable rotates in unison with the cable spool while the other end is pulled from the enclosure.

Listing of Claims:

1. (Original) A method of connecting a subscriber to a fiber optic network using a fiber optic enclosure, the fiber optic enclosure including a main housing, a cable spool disposed within an interior of the main housing, an adapter disposed within the interior of the main housing, and a cover that selectively provides and blocks access to the interior of the main housing, the cable spool holding at least a portion of an optical cable that includes an optical fiber extending between a first end and a second end, the first end being terminated at a first optical connector and the second end being terminated at a second optical connector, the method comprising:

paying out a portion of the optical cable from the cable spool by rotating the cable spool while the second optical connector rotates in concert with the cable spool; and

opening the cover to provide access to the interior of the main housing;

routing a connectorized end of a subscriber cable into the interior of the main housing;

plugging the connectorized end of the subscriber cable into the adapter; and

closing the cover to block access to the interior of the main housing after the subscriber cable is plugged into the adapter, wherein the adapter, the second optical connector, and the connectorized end of the subscriber cable remain disposed within the interior of the main housing when the cover is closed.

2. (Original) The method of claim 1, wherein the adapter rotates in concert with the cable spool.

3. (Original) The method of claim 1, further comprising mounting the main housing to a surface.

4. (Original) The method of claim 1, wherein paying out a portion of the optical cable includes pulling on the optical cable at the first optical connector

5. (Original) The method of claim 1, wherein the second optical connector is plugged into the adapter before paying out the portion of the optical cable.

6. (Original) The method of claim 1, further comprising optically coupling the first optical connector to the fiber optic network at a location remote from the fiber optic enclosure.

7. (Original) The method of claim 1, wherein optically coupling the first optical connector to the fiber optic network is performed before mounting the main housing to the surface.

8. (Original) The method of claim 1, wherein optically coupling the first optical connector to the fiber optic network is performed after mounting the main housing to the surface.

9. (Original) The method of claim 1, wherein opening the cover comprises pivoting the cover relative to the main housing.

10. (Original) The method of claim 1, wherein routing the connectorized end of the subscriber cable into the interior of the main housing comprises routing the connectorized end through a cable port.

11. (Original) The method of claim 10, wherein the main housing and the cover cooperate to define the cable port.

12. (Original) The method of claim 10, wherein the cable port is environmentally sealed.

13. (Original) The method of claim 12, wherein the cable port is sealed using a slitted sealing member.

14. (Original) The method of claim 12, wherein the cable port is sealed using a slitted foam member.

15. (Original) The method of claim 1, wherein the optical fiber is one of a plurality of optical fibers of the optical cable, and wherein a respective first end of each of the plurality of optical fibers is terminated at the first optical connector.

16. (Original) The method of claim 15, wherein a respective second end of each of the plurality of optical fibers is separately terminated at a respective second optical connector, each of the respective second optical connectors rotating in concert with the cable spool when the optical cable is paid out from the cable spool.

17. (Original) The method of claim 16, wherein the adapter is one of a plurality of adapters disposed within the interior of the main housing; and wherein each of the respective second optical connectors are plugged into one of the plurality of adapters.

18. (Original) The method of claim 17, wherein connectorized ends of additional subscriber cables are routed into the interior of the main housing and plugged into respective ones of the plurality of adapters when the cover is open.

19. (Original) The method of claim 1, wherein the cable spool rotates about an axis of rotation oriented to intersect the cover when the cover blocks access to the interior of the main housing.

20. (Original) A method of connecting a subscriber to a fiber optic network using a fiber optic enclosure, the fiber optical enclosure including a main housing and a cover, the main housing having opposite rear and front sides, the cover being movable relative to the main housing between an open position and a closed position, the cover blocking access to an interior of the main housing through the front side when in the closed position and allowing access to the interior through the front side when in the open position, the method comprising:

paying out an optical cable from a cable spool disposed within the interior of the main housing, the optical cable extending between a first end and a second end, the first end being

routed away from the interior of the main housing while the optical cable is being paid out, the second end rotating in unison with the cable spool within the interior of the main housing while the optical cable is being paid out;

routing an end of a subscriber cable into the interior of the main housing while the cover is in the open position;

optically coupling the end of the subscriber cable to the second end of the optical cable at an optical adapter disposed within the interior of the main housing while the cover is in the open position; and

moving the cover to the closed position to enclose the optical adapter, the end of the subscriber cable, and the second end of the cable within the interior of the main housing.

21. (Original) The method of claim 20, wherein paying out the optical cable includes pulling on the first end of the optical cable.

22. (Original) The method of claim 20, wherein the optical cable includes a plurality of optical fibers, wherein the plurality of optical fibers are connectorized at a multi-fiber connector at the first end of the optical cable; and wherein the plurality of optical fibers are individually connectorized at single-fiber connectors at the second end of the optical cable.

23. (Original) The method of claim 22, wherein the subscriber cable is one of a plurality of subscriber cables and the optical adapter is one of a plurality of optical adapters, and wherein the method further comprises:

plugging each of the single-fiber connectors into respective ones of the plurality of optical adapters within the interior of the main housing while the cover is in the open position; and

plugging connectorized ends of the subscriber cables into respective ones of the plurality of optical adapters while the cover is in the open position;

wherein moving the cover to the closed position encloses the plurality of optical adapters, the single-fiber connectors, and the connectorized ends of the plurality of subscriber cables.

24. (Original) The method of claim 20, further comprising mounting the rear side of the main housing to a wall.

REMARKS

This paper responds to the Office Action mailed November 18, 2019. Claims 1-24 remain pending in the application. No claims are amended. A new title and Abstract are being submitted per the Examiner's request. Support for these changes can be found throughout the specification and figures. No new matter is added.

Reexamination and allowance of the pending claims are respectfully requested.

Objections to Title

Formal objection is made to the title. In response, a new title is submitted herewith to enhance consistency between the title and the claims. Support for this change is provided throughout the specification and figures. No new matter has been added.

Withdrawal of the objection is respectfully requested.

Objections to Abstract

Formal objection is made to the Abstract. In response, Applicant submits a new Abstract above. Support for this change is provided throughout the specification and figures. No new matter has been added.

Withdrawal of the objection is respectfully requested.

Information Disclosure Statement

Objection is made to the Information Disclosure Statements submitted in this case for not including an explanation of relevance of the cited art.

In response, Applicant notes that all submitted non-English references include either an English language abstract or a machine translation. Of course, Applicant will be happy to supply another copy of the abstract or translation if needed.

Applicant is not in possession of a chart or other document analyzing the relevance of each individual cited document. Further, Applicant notes that no such detailed analysis is required under 37 CFR 1.56. However, Applicant is open to discussing any reference on which the Examiner has questions in a telephone interview.

In general, Applicant notes that the majority of the art cited in the pending case was previously cited in the parent cases. Applicant further notes that the underlying technology, a rotatable cable spool within an enclosure, was subject to litigation and Inter Partes Review (IPR) proceedings. In an effort to comply with Applicant's duty of disclosure, the documents from these proceedings have been submitted. In further compliance with Applicant's duty of disclosure, Applicant is attempting to cite art from co-pending related prosecution. For example, the art cited in the Information Disclosure Statement being filed herewith was cited in Office Actions in copending U.S. Application Nos. 15/388,874 and 15/470,311.

Claim Rejection - § 103

Claims 1-24 are rejected under 35 U.S.C. 103 as being unpatentable over U.S. Patent No. 6,220,413 to Walters et al. (hereinafter "Walters") in view of U.S. Publication No. 2005/0103515 to Fuller (hereinafter "Fuller"). Applicant respectfully traverse the rejection.

Claims 1-19

The combination of Walters and Fuller does not disclose or suggest routing a connectorized end of a subscriber cable into the interior of the main housing; plugging the connectorized end of the subscriber cable into the adapter in combination with the other features recited in claim 1.

In Walters, a connector panel 53 is adapted to fit selectively on frame docking station 43 as shown in FIG. 6 (reproduced below) or reel docking station 47 as shown in FIG. 5 (reproduced below). See Walters, column 2, lines 57-59. When the connector panel 53 is placed at the reel docking station 47, the lines 59 **must** first be removed. See Walters, column 3, lines 22-24 (emphasis added). Accordingly, Walters teaches away from routing a connectorized end of a subscriber cable *into* the interior of a main housing; and plugging the connectorized end of the subscriber cable into an adapter.

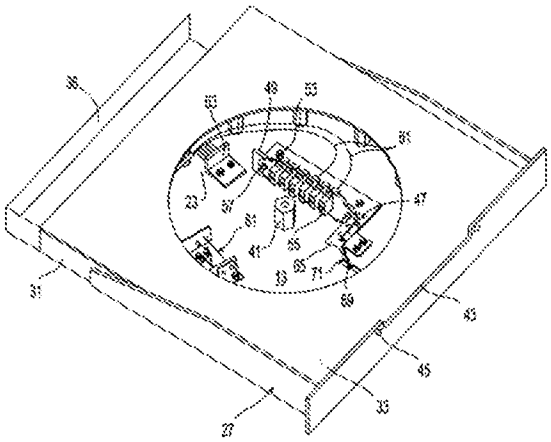

Fig. 5

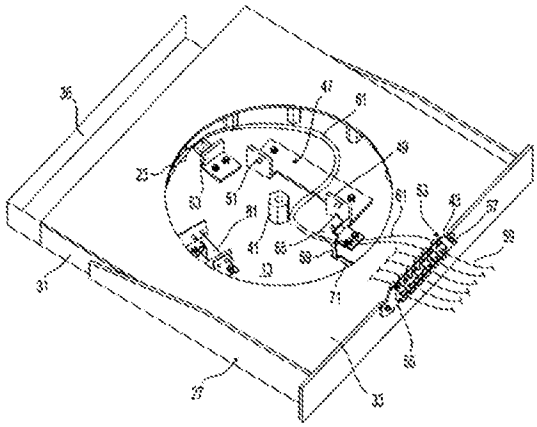

Fig. 6

Fuller does not overcome the shortcomings of Walters. Fuller discloses a cable extending from a first coupler 39 to a second coupler 45. See Fuller, paragraph [0064]; and FIG. 4 (reproduced below). The first coupler 39 engages a receptor 15 disposed in the faceplate 17 of an enclosure 13. See Fuller, paragraph [0064]; and FIG. 3 (reproduced below). Accordingly, any subscriber line would be routed to an *exterior* of the faceplate 17 to plug into the other side of receptor 15. Accordingly, Fuller also does not disclose or suggest routing a connectorized end of a subscriber cable *into the interior* of a main housing.

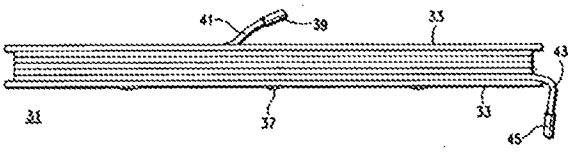

FIG.–4

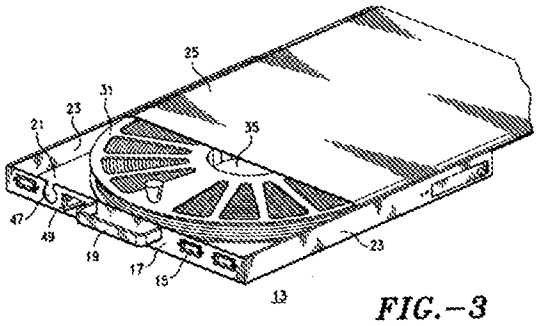

FIG.–3

For at least these reasons, Walters would not lead a person skilled in the art to the invention of claim 1, even in view of Fuller. Claims 2-19 depend from claim 1 and are allowable for at least the same reasons. Withdrawal of the rejection is respectfully requested. Applicant does not otherwise concede the correctness of the rejection and reserves the right to make additional arguments if necessary.

Claims 20-24

The combination of Walters and Fuller does not disclose or suggest routing an end of a subscriber cable into the interior of a main housing while a cover is in the open position; and optically coupling the end of the subscriber cable to the second end of an optical cable at an optical adapter disposed within the interior of the main housing in combination with the other features recited in claim 20.

Rather, Walters discloses a connector panel 53 that is adapted to fit selectively on frame docking station 43 as shown in FIG. 6 or reel docking station 47 as shown in FIG. 5. See Walters, column 2, lines 57-59. When the connector panel 53 is placed at the reel docking station 47, the lines 59 **must** first be removed. See Walters, column 3, lines 22-24 (emphasis added). Accordingly, Walters teaches away from suggest routing an end of a subscriber cable *into the interior* of a main housing. Further, Walters teaches away from optically coupling the end of the subscriber cable to the second end of an optical cable at an optical adapter disposed *within the interior* of the main housing.

Fuller does not overcome the shortcomings of Walters. Fuller discloses a cable extending from a first coupler 39 to a second coupler 45. See Fuller, paragraph [0064]; and FIG. 4 (reproduced above). The first coupler 39 engages a receptor 15 disposed in the faceplate 17 of an enclosure 13. See Fuller, paragraph [0064]; and FIG. 3 (reproduced above). Accordingly, any subscriber line would be routed to an *exterior* of the faceplate 17 to plug into the other side of receptor 15. Accordingly, Fuller also does not disclose or suggest routing a connectorized end of a subscriber cable *into the interior* of a main housing.

For at least these reasons, Walters would not lead a person skilled in the art to the invention of claim 20, even in view of Fuller. Claims 21-24 depend from claim 20 and are allowable for at least the same reasons. Withdrawal of the rejection is respectfully requested. Applicant does not otherwise concede the correctness of the rejection and reserves the right to make additional arguments if necessary.

Conclusion

In view of the above amendments and remarks, Applicant respectfully requests a Notice of Allowance. If the Examiner believes a telephone conference would advance the prosecution of this application, the Examiner is invited to telephone the undersigned at the below-listed telephone number.

Respectfully submitted,

MERCHANT & GOULD P.C.
P.O. Box 2903
Minneapolis, Minnesota 55402-0903
(612) 332-5300

Date: March 18, 2020

__/Julie K. Skoge/_____
Julie K. Skoge
Reg. No. 63,431

142510
PATENT TRADEMARK OFFICE

Electronic Patent Application Fee Transmittal

Application Number:	15875605
Filing Date:	19-Jan-2018
Title of Invention:	FIBER OPTIC ENCLOSURE WITH INTERNAL CABLE SPOOL
First Named Inventor/Applicant Name:	Scott C. Kowalczyk
Filer:	Julie Katherine Skoge/Rebecca Krueger
Attorney Docket Number:	02316.2584US23/ADC003176

Filed as Large Entity

Filing Fees for Utility under 35 USC 111(a)

Description	Fee Code	Quantity	Amount	Sub-Total in USD($)
Basic Filing:				
Pages:				
Claims:				
Miscellaneous-Filing:				
Petition:				
Patent-Appeals-and-Interference:				
Post-Allowance-and-Post-Issuance:				
Extension-of-Time:				

Description	Fee Code	Quantity	Amount	Sub-Total in USD($)
Extension - 1 month with $0 paid	1251	1	200	200
Miscellaneous:				
			Total in USD ($)	**200**

Electronic Acknowledgement Receipt

EFS ID:	38900818
Application Number:	15875605
International Application Number:	
Confirmation Number:	4897
Title of Invention:	FIBER OPTIC ENCLOSURE WITH INTERNAL CABLE SPOOL
First Named Inventor/Applicant Name:	Scott C. Kowalczyk
Customer Number:	142510
Filer:	Julie Katherine Skoge/Rebecca Krueger
Filer Authorized By:	Julie Katherine Skoge
Attorney Docket Number:	02316.2584US23/ADC003176
Receipt Date:	18-MAR-2020
Filing Date:	19-JAN-2018
Time Stamp:	14:09:07
Application Type:	Utility under 35 USC 111(a)

Payment information:

Submitted with Payment	yes
Payment Type	CARD
Payment was successfully received in RAM	$200
RAM confirmation Number	E20203HE09350214
Deposit Account	132725
Authorized User	Rebecca Krueger

The Director of the USPTO is hereby authorized to charge indicated fees and credit any overpayment as follows:

37 CFR 1.21 (Miscellaneous fees and charges)

File Listing:

Document Number	Document Description	File Name	File Size(Bytes)/ Message Digest	Multi Part /.zip	Pages (if appl.)
1	Extension of Time	2020-03-18-Ext-Time.PDF	153446 91064dc0f008bd94257de0537453f2dfa7a0bee5	no	2
Warnings:					
Information:					
2		2020-03-18-Amendment.PDF	426846 e762442307141d615088e0d09c3853f10af10b7e	yes	13

Multipart Description/PDF files in .zip description

Document Description	Start	End
Amendment/Req. Reconsideration-After Non-Final Reject	1	1
Specification	2	2
Abstract	3	3
Claims	4	8
Applicant Arguments/Remarks Made in an Amendment	9	13

Warnings:					
Information:					
3	Fee Worksheet (SB06)	fee-info.pdf	31113 289b9df33e8d8b663afe5db9182bc34939eef4ac	no	2
Warnings:					
Information:					
			Total Files Size (in bytes):	611405	

This Acknowledgement Receipt evidences receipt on the noted date by the USPTO of the indicated documents, characterized by the applicant, and including page counts, where applicable. It serves as evidence of receipt similar to a Post Card, as described in MPEP 503.

New Applications Under 35 U.S.C. 111
If a new application is being filed and the application includes the necessary components for a filing date (see 37 CFR 1.53(b)-(d) and MPEP 506), a Filing Receipt (37 CFR 1.54) will be issued in due course and the date shown on this Acknowledgement Receipt will establish the filing date of the application.
National Stage of an International Application under 35 U.S.C. 371
If a timely submission to enter the national stage of an international application is compliant with the conditions of 35 U.S.C. 371 and other applicable requirements a Form PCT/DO/EO/903 indicating acceptance of the application as a national stage submission under 35 U.S.C. 371 will be issued in addition to the Filing Receipt, in due course.
New International Application Filed with the USPTO as a Receiving Office
If a new international application is being filed and the international application includes the necessary components for an international filing date (see PCT Article 11 and MPEP 1810), a Notification of the International Application Number and of the International Filing Date (Form PCT/RO/105) will be issued in due course, subject to prescriptions concerning national security, and the date shown on this Acknowledgement Receipt will establish the international filing date of the application.

PTO/AIA/22 (03-13)
Approved for use through 11/30/2020. OMB 0651-0031
U.S. Patent and Trademark Office; U.S. DEPARTMENT OF COMMERCE
Under the Paperwork Reduction Act of 1995, no persons are required to respond to a collection of information unless it displays a valid OMB control number.

PETITION FOR EXTENSION OF TIME UNDER 37 CFR 1.136(a)

Docket Number (Optional): 02316.2584US23/ADC003176

Application Number: 15/875,605

Filed: January 19, 2018

For: Connecting Subscribers to a Fiber Optic Network Using a Cable Spool (as amended)

Art Unit: 2874

Examiner: Ullah, Akm E.

This is a request under the provisions of 37 CFR 1.136(a) to extend the period for filing a reply in the above-identified application.

The requested extension and fee are as follows (check time period desired and enter the appropriate fee below):

		Fee	Small Entity Fee	Micro Entity Fee	
☑	One month (37 CFR 1.17(a)(1))	$200	$100	$50	$ 200
☐	Two months (37 CFR 1.17(a)(2))	$600	$300	$150	$
☐	Three months (37 CFR 1.17(a)(3))	$1,400	$700	$350	$
☐	Four months (37 CFR 1.17(a)(4))	$2,200	$1,100	$550	$
☐	Five months (37 CFR 1.17(a)(5))	$3,000	$1,500	$750	$

☐ Applicant asserts small entity status. See 37 CFR 1.27.

☐ Applicant certifies micro entity status. See 37 CFR 1.29.
Form PTO/SB/15A or B or equivalent must either be enclosed or have been submitted previously.

☐ A check in the amount of the fee is enclosed.

☐ Payment by credit card. Form PTO-2038 is attached.

☐ The Director has already been authorized to charge fees in this application to a Deposit Account.

☑ The Director is hereby authorized to charge any fees which may be required, or credit any overpayment, to Deposit Account Number 132725.

☑ Payment made via EFS-Web.

WARNING: Information on this form may become public. Credit card information should not be included on this form. Provide credit card information and authorization on PTO-2038.

I am the

☐ applicant.

☑ attorney or agent of record. Registration number 63,431.

☐ attorney or agent acting under 37 CFR 1.34. Registration number _____.

/Julie K. Skoge/
Signature

2020-03-18
Date

Julie K. Skoge
Typed or printed name

612.332.5300
Telephone Number

NOTE: This form must be signed in accordance with 37 CFR 1.33. See 37 CFR 1.4 for signature requirements and certifications. Submit multiple forms if more than one signature is required, see below*.

☑ * Total of 1 forms are submitted.

This collection of information is required by 37 CFR 1.136(a). The information is required to obtain or retain a benefit by the public, which is to file (and by the USPTO to process) an application. Confidentiality is governed by 35 U.S.C. 122 and 37 CFR 1.11 and 1.14. This collection is estimated to take 6 minutes to complete, including gathering, preparing, and submitting the completed application form to the USPTO. Time will vary depending upon the individual case. Any comments on the amount of time you require to complete this form and/or suggestions for reducing this burden should be sent to the Chief Information Officer, U.S. Patent and Trademark Office, U.S. Department of Commerce, P.O. Box 1450, Alexandria, VA 22313-1450. DO NOT SEND FEES OR COMPLETED FORMS TO THIS ADDRESS. SEND TO: Mail Stop PCT, Commissioner for Patents, P.O. Box 1450, Alexandria, VA 22313-1450.

Privacy Act Statement

The **Privacy Act of 1974 (P.L. 93-579)** requires that you be given certain information in connection with your submission of the attached form related to a patent application or patent. Accordingly, pursuant to the requirements of the Act, please be advised that: (1) the general authority for the collection of this information is 35 U.S.C. 2(b)(2); (2) furnishing of the information solicited is voluntary; and (3) the principal purpose for which the information is used by the U.S. Patent and Trademark Office is to process and/or examine your submission related to a patent application or patent. If you do not furnish the requested information, the U.S. Patent and Trademark Office may not be able to process and/or examine your submission, which may result in termination of proceedings or abandonment of the application or expiration of the patent.

The information provided by you in this form will be subject to the following routine uses:

1. The information on this form will be treated confidentially to the extent allowed under the Freedom of Information Act (5 U.S.C. 552) and the Privacy Act (5 U.S.C 552a). Records from this system of records may be disclosed to the Department of Justice to determine whether disclosure of these records is required by the Freedom of Information Act.
2. A record from this system of records may be disclosed, as a routine use, in the course of presenting evidence to a court, magistrate, or administrative tribunal, including disclosures to opposing counsel in the course of settlement negotiations.
3. A record in this system of records may be disclosed, as a routine use, to a Member of Congress submitting a request involving an individual, to whom the record pertains, when the individual has requested assistance from the Member with respect to the subject matter of the record.
4. A record in this system of records may be disclosed, as a routine use, to a contractor of the Agency having need for the information in order to perform a contract. Recipients of information shall be required to comply with the requirements of the Privacy Act of 1974, as amended, pursuant to 5 U.S.C. 552a(m).
5. A record related to an International Application filed under the Patent Cooperation Treaty in this system of records may be disclosed, as a routine use, to the International Bureau of the World Intellectual Property Organization, pursuant to the Patent Cooperation Treaty.
6. A record in this system of records may be disclosed, as a routine use, to another federal agency for purposes of National Security review (35 U.S.C. 181) and for review pursuant to the Atomic Energy Act (42 U.S.C. 218(c)).
7. A record from this system of records may be disclosed, as a routine use, to the Administrator, General Services, or his/her designee, during an inspection of records conducted by GSA as part of that agency's responsibility to recommend improvements in records management practices and programs, under authority of 44 U.S.C. 2904 and 2906. Such disclosure shall be made in accordance with the GSA regulations governing inspection of records for this purpose, and any other relevant (*i.e.*, GSA or Commerce) directive. Such disclosure shall not be used to make determinations about individuals.
8. A record from this system of records may be disclosed, as a routine use, to the public after either publication of the application pursuant to 35 U.S.C. 122(b) or issuance of a patent pursuant to 35 U.S.C. 151. Further, a record may be disclosed, subject to the limitations of 37 CFR 1.14, as a routine use, to the public if the record was filed in an application which became abandoned or in which the proceedings were terminated and which application is referenced by either a published application, an application open to public inspection or an issued patent.
9. A record from this system of records may be disclosed, as a routine use, to a Federal, State, or local law enforcement agency, if the USPTO becomes aware of a violation or potential violation of law or regulation.

UNITED STATES PATENT AND TRADEMARK OFFICE

UNITED STATES DEPARTMENT OF COMMERCE
United States Patent and Trademark Office
Address: COMMISSIONER FOR PATENTS
P.O. Box 1450
Alexandria, Virginia 22313-1450
www.uspto.gov

APPLICATION NO.	FILING DATE	FIRST NAMED INVENTOR	ATTORNEY DOCKET NO.	CONFIRMATION NO.
15/875,605	01/19/2018	Scott C. Kowalczyk	02316.2584US23/ ADC003176	4897

142510 7590 11/18/2019
M&G CommScope
P.O. Box 2903
Minneapolis, MN 55402

EXAMINER
ULLAH, AKM E

ART UNIT	PAPER NUMBER
2874	

NOTIFICATION DATE	DELIVERY MODE
11/18/2019	ELECTRONIC

Please find below and/or attached an Office communication concerning this application or proceeding.

The time period for reply, if any, is set in the attached communication.

Notice of the Office communication was sent electronically on above-indicated "Notification Date" to the following e-mail address(es):

uspto142510@merchantgould.com

Office Action Summary	Application No. 15/875,605	Applicant(s) Kowalczyk et al.	
	Examiner Akm E Ullah	Art Unit 2874	AIA (FITF) Status No

-- The MAILING DATE of this communication appears on the cover sheet with the correspondence address --

Period for Reply

A SHORTENED STATUTORY PERIOD FOR REPLY IS SET TO EXPIRE 3 MONTHS FROM THE MAILING DATE OF THIS COMMUNICATION.

- Extensions of time may be available under the provisions of 37 CFR 1.136(a). In no event, however, may a reply be timely filed after SIX (6) MONTHS from the mailing date of this communication.
- If NO period for reply is specified above, the maximum statutory period will apply and will expire SIX (6) MONTHS from the mailing date of this communication.
- Failure to reply within the set or extended period for reply will, by statute, cause the application to become ABANDONED (35 U.S.C. § 133). Any reply received by the Office later than three months after the mailing date of this communication, even if timely filed, may reduce any earned patent term adjustment. See 37 CFR 1.704(b).

Status

1)☐ Responsive to communication(s) filed on _____.

☐ A declaration(s)/affidavit(s) under **37 CFR 1.130(b)** was/were filed on _____.

2a)☐ This action is **FINAL.** 2b) ☑ This action is non-final.

3)☐ An election was made by the applicant in response to a restriction requirement set forth during the interview on _____; the restriction requirement and election have been incorporated into this action.

4)☐ Since this application is in condition for allowance except for formal matters, prosecution as to the merits is closed in accordance with the practice under *Ex parte Quayle*, 1935 C.D. 11, 453 O.G. 213.

Disposition of Claims*

5) ☑ Claim(s) 1-24 is/are pending in the application.

5a) Of the above claim(s) _____ is/are withdrawn from consideration.

6) ☐ Claim(s) _____ is/are allowed.

7) ☑ Claim(s) 1-24 is/are rejected.

8) ☐ Claim(s) _____ is/are objected to.

9) ☐ Claim(s) _____ are subject to restriction and/or election requirement

* If any claims have been determined allowable, you may be eligible to benefit from the **Patent Prosecution Highway** program at a participating intellectual property office for the corresponding application. For more information, please see http://www.uspto.gov/patents/init_events/pph/index.jsp or send an inquiry to **PPHfeedback@uspto.gov.**

Application Papers

10)☐ The specification is objected to by the Examiner.

11)☑ The drawing(s) filed on 01/19/2018 is/are: a)☑ accepted or b)☐ objected to by the Examiner.

Applicant may not request that any objection to the drawing(s) be held in abeyance. See 37 CFR 1.85(a).

Replacement drawing sheet(s) including the correction is required if the drawing(s) is objected to. See 37 CFR 1.121(d).

Priority under 35 U.S.C. § 119

12)☐ Acknowledgment is made of a claim for foreign priority under 35 U.S.C. § 119(a)-(d) or (f).

Certified copies:

a)☐ All b)☐ Some** c)☐ None of the:

1.☐ Certified copies of the priority documents have been received.

2.☐ Certified copies of the priority documents have been received in Application No. _____.

3.☐ Copies of the certified copies of the priority documents have been received in this National Stage application from the International Bureau (PCT Rule 17.2(a)).

** See the attached detailed Office action for a list of the certified copies not received.

Attachment(s)

1) ☑ Notice of References Cited (PTO-892)

2) ☑ Information Disclosure Statement(s) (PTO/SB/08a and/or PTO/SB/08b) Paper No(s)/Mail Date _____.

3) ☐ Interview Summary (PTO-413) Paper No(s)/Mail Date _____.

4) ☐ Other: _____.

Notice of Pre-AIA or AIA Status

The present application is being examined under the pre-AIA first to invent provisions.

Detailed Action

Applicant cooperation is requested in correcting any errors of which applicant may become aware in the specification.

Status of the Application

Parent Data:

This instant US application serial number 15875605, filed 01/19/2018 and having 1 RCE-type filing therein is a continuation of 15470311, filed 03/27/2017 and having 1 RCE-type filing therein 15470311 is a continuation of 14979870, filed 12/28/2015 ,now U.S. Patent #9606319 **and having 1 RCE-type filing therein 14979870 is a continuation of 14539459, filed 11/12/2014** ,now U.S. Patent #9261666 **14539459 is a continuation of 14132691, filed 12/18/2013** ,now U.S. Patent #8891931 **14132691 is a continuation of 13924191, filed 06/21/2013** ,now U.S. Patent #8705929 **13924191 is a continuation of 13479015, filed 05/23/2012** ,now U.S. Patent #8494333 **13479015 is a continuation of 13032337, filed 02/22/2011** ,now U.S. Patent #8189984 **and having 2 RCE-type filings therein 13032337 is a continuation of 12793556, filed 06/03/2010** ,now U.S. Patent #7894701 **12793556 is a continuation of 12182705, filed 07/30/2008** ,now U.S. Patent #7756379 **and having 1 RCE-type filing therein 12182705 Claims Priority from Provisional Application 61029248, filed 02/15/2008 12182705 Claims Priority from Provisional Application 60954214, filed 08/06/2007.**

Child Data:

The application serial number 16153421, filed on 10/05/2018 and having 2 RCE-type filings therein, is a continuation of 15875605 , filed on 01/19/2018 and having 1 RCE-type filing therein.

Claims 1- 24 are pending in this application.

The Title Of The Invention is Not Descriptive

The title of the invention is not descriptive. A new title is required that is clearly indicative of the invention to which the claims are directed.

Abstract of the Disclosure

Applicant is reminded of the proper content of an abstract of the disclosure.

A patent abstract is a concise statement of the technical disclosure of the patent and should include that which is new in the art to which the invention pertains. The abstract should not refer to purported merits or speculative applications of the invention and should not compare the invention with the prior art.

The abstract should be in narrative form and generally limited to a single paragraph on a separate sheet within the range of 50 to 150 words in length. The abstract should describe the disclosure sufficiently to assist readers in deciding whether there is a need for consulting the full patent text for details.

The language should be clear and concise and should not repeat information given in the title. It should avoid using phrases which can be implied, such as, “The

disclosure concerns," "The disclosure defined by this invention," "The disclosure describes," etc. In addition, the form and legal phraseology often used in patent claims, such as "means" and "said," should be avoided.

If the patent is of a basic nature, the entire technical disclosure may be new in the art, and the abstract should be directed to the entire disclosure. If the patent is in the nature of an improvement in an old apparatus, process, product, or composition, the abstract should include the technical disclosure of the improvement. The abstract should also mention by way of example any preferred modifications or alternatives.

Where applicable, the abstract should include the following: (1) if a machine or apparatus, its organization and operation; (2) if an article, its method of making; (3) if a chemical compound, its identity and use; (4) if a mixture, its ingredients; (5) if a process, the steps.

Extensive mechanical and design details of an apparatus should not be included in the abstract. The abstract should be in narrative form and generally limited to a single paragraph within the range of 50 to 150 words in length.

See MPEP § 608.01(b) for guidelines for the preparation of patent abstracts.

Notice re prior art available under both Pre-AIA and AIA

In the event the determination of the status of the application as subject to AIA 35 U.S.C. 102 and 103 (or as subject to pre-AIA 35 U.S.C. 102 and 103) is incorrect, any correction of the statutory basis for the rejection will not be considered a new ground of

rejection if the prior art relied upon, and the rationale supporting the rejection, would be the same under either status.

Information Disclosure Statement

No Explanation of Relevance

The information disclosure statement filed 01/19/2018, 09/26/2018, 05/13/2019, 05/13/2019 and 08-05-2019 fails to include a concise explanation of the relevance.

Applicant Cited Numerous Prior Art

Applicant provided numerous prior arts in this instant application. It is requested to make a chart to distinguish over the prior and the instant claims. It is also requested to explain each reference and how it distinct form the instant application.

Claim Rejections - 35 USC § 103

The following is a quotation of 35 U.S.C. 103 which forms the basis for all obviousness rejections set forth in this Office action:

> A patent for a claimed invention may not be obtained, notwithstanding that the claimed invention is not identically disclosed as set forth in section 102, if the differences between the claimed invention and the prior art are such that the claimed invention as a whole would have been obvious before the effective filing date of the claimed invention to a person having ordinary skill in the art to which the claimed invention pertains. Patentability shall not be negated by the manner in which the invention was made.

This application currently names joint inventors. In considering patentability of the claims the examiner presumes that the subject matter of the various claims was commonly owned as of the effective filing date of the claimed invention(s) absent any evidence to the contrary. Applicant is advised of the obligation under 37 CFR 1.56 to

point out the inventor and effective filing dates of each claim that was not commonly owned as of the effective filing date of the later invention in order for the examiner to consider the applicability of 35 U.S.C. 102(b)(2)(C) for any potential 35 U.S.C. 102(a)(2) prior art against the later invention.

Claims 1- 24 are rejected under 35 U.S.C. 103 as being unpatentable over Walters et al.(USPNO. 6,220,413) in view of Fuller (USPub.no. 2005/ 0,103,515).

Regarding claims 1 and 19, a method of connecting a subscriber to a fiber optic network using a fiber optic enclosure (figure 5, column 1, and lines 23-31), the fiber optic enclosure including:

a main housing (27) , a cable spool (11) disposed within an interior of the main housing (27) , an adapter (connector sleeve 55 also a fiber optic adapter, see column 2, lines 57 -61) disposed within the interior of the main housing, and a cover (33) that selectively provides and blocks access to the interior of the main housing (27) , the cable spool (11) holding at least a portion of an optical cable (23) that includes an optical fiber (61) extending between a first end and a second end, the first end being terminated at a first optical connector and the second end being terminated at a second optical connector,

the method comprising: paying out a portion of the optical cable (23) from the cable spool (11) by rotating the cable spool (11) while the second optical connector rotates in concert with the cable spool (11) ; and opening the cover (33) to provide access to the interior of the main housing (27);

routing a connectorized end of a subscriber cable into the interior of the main housing (27) ; plugging the connectorized end of the subscriber cable into the adapter ((connector sleeve 55 also a fiber optic adapter, see column 2, lines 57 -61)

; and closing the cover (33) to block access to the interior of the main housing (27) after the subscriber cable is plugged into the adapter(see paragraphs 58-61) , wherein the adapter (connector sleeve 55 also a fiber optic adapter, see column 2, lines 57 -61) , the second optical connector, and the connectorized end of the subscriber cable remain disposed within the interior of the main housing (27) when the cover(33) is closed.

Fuller disclose a fiber optic cable enclosure (13, figure 3), a cable reel/spool 31 which is disposed for rotation on the enclosure 13 with a vertical axis of rotation that can rotate with a predetermined spacing from the walls of surrounding enclosure. Note that the reel (31) includes a pair of horizontally oriented parallel side plates (33) extending from opposite sides of a central circular hub (35).

Fuller also discloses a coupler (39) secured to a first end (41) of the cable(see column 11, lines 1-12) that is disposed proximate to the central circular hub (35) of the reel when the cable is wound on the reel around the hub. The first end (41) is “secured within the central hub when the cable is wound on the reel.” The coupler (39) is “formed to engage a receptor 15 disposed on the faceplate 17 of the enclosure 13. The opposite end of the cable from the first end, i.e., the second end (43) of the cable, has a coupler (45) secured thereto for engaging a remotely located receptor.

Fuller further teaches (see under summary of the invention, column 11, lines 13-37) at least one coupler is secured to a first or fixed end of a cable disposed proximate

to the central hub of the reel when cable is wound on the reel around the hub. The coupler is formed to engage a receptor disposed in the face plate of the enclosure. The opposite end of the cable from the first fixed end is a second or free end of the cable and has a coupler secured thereto for engaging a remotely located receptor and at least one receptor is disposed in the faceplate panel for receiving male and female couplers. An opening is formed in the faceplate panel within which the second free end of the cable can be disposed for extraction therethrough.

It would have been obvious to one of ordinary skill in the art before the effective filling date of the claimed invention to modify the invention **of Walter et al in view of Fuller et al.** by including applying out an optical cable spool disposed within the interior of the main housing the optical cable extending between a first end and a second end, the first end being routed away from the interior of the main housing while the optical cable is paying out, **since** the invention provides a new method, apparatus, and design of construction for an improved every day, special application, or emergency fiber optic cable reel enclosure, wherein the same can be utilized to more perfectly perform its function. The **reel system** can also be used for non-emergency deployment and a new and improved emergency fiber optic cable storage enclosure which has many of the advantages of the prior art of cable reel enclosures mentioned and described above, and many novel features and advantages that result in a new emergency fiber optic cable enclosure for adoption, which meets the existing design criteria and is not anticipated, rendered obvious, suggested, or even implied by any of the prior art of cable reel enclosures heretofore known, either alone or in any combination thereof.

Regarding claim 2, . The method of claim 1, wherein the adapter (column 2, lines 57 – 61) rotates in concert with the cable spool (11).

Regarding claim 3, further comprising mounting the main housing to a surface.

It would have been an obvious matter of design choice to mount the main housing to a surface since applicant has not disclose that gives/ solves any stated problem or is for any particular purpose and it appears that the invention would perform equally well with the fiber optic network in the fiber optic cable enclosure.

Regarding claim 4, wherein paying out a portion of the optical cable includes pulling on the optical cable at the first optical connector.

Regarding claim 5, wherein the second optical connector is plugged into the adapter before paying out the portion of the optical cable.

Regarding claim 6, further comprising optically coupling the first optical connector to the fiber optic network at a location remote from the fiber optic enclosure.

It would have been obvious to one of ordinary skill in the art at the time the invention was made to use further optically coupling the first optical connector to the fiber optic network at a location remote from the fiber optic enclosure, since it has been held that constructing a formerly integral structure in various elements involves only routine skill in the art. *In re Dulberg, 289 F.2d 522, 523, 129 USPQ 348, 349 (CCPA 1961); Nerwin v. Erlichman,* 168 USPQ 177, 179.

Regarding claim 7, the method of claim 7, wherein optically coupling the first optical connector to the fiber optic network is performed before mounting the main housing to the surface.

It would have been obvious to one of ordinary skill in the art at the time the invention was made to use further optically coupling the first optical connector to the fiber optic network performed before mounting the main housing to the surface , since it has been held that constructing a formerly integral structure in various elements involves only routine skill in the art. *In re Dulberg, 289 F.2d 522, 523, 129 USPQ 348, 349 (CCPA 1961); Nerwin v. Erlichman,* 168 USPQ 177, 179.

Regarding claim 8, wherein optically coupling the first optical connector to the fiber optic network is performed after mounting the main housing to the surface.

It would have been obvious to one of ordinary skill in the art at the time the invention was made to an optically coupling the first optical connector to the fiber optic network is performed after mounting the main housing to the surface, since it has been held that making a such fiber optic enclosure without producing any new and unexpected result involves only routine skill in the art. In re Lindberg, 93 USPQ 23 (CCPA1952).

Regarding claim 9, wherein opening the cover comprises pivoting the cover relative to the main housing.
It would have been obvious to one of ordinary skill in the art at the time the invention was made to open the cover comprises pivoting the cover relative to the main housing, since it has been held that making a such fiber optic enclosure without producing any new and unexpected result involves only routine skill in the art. In re Lindberg, 93 USPQ 23 (CCPA1952).

Regarding claim 10, wherein routing the connectorized end of the subscriber cable into the interior of the main housing comprises routing the connectorized end through a cable port.

It is an inherent teachings of the Walters et al and Fuller et al. references.

Regarding claim 11 wherein the main housing and the cover cooperate to define the cable port. It is an inherent teachings of the Walters et al and Fuller et al. references.

Regarding claim 13, wherein the cable port is environmentally sealed.

It would have been obvious to one of ordinary skill in the art at the time of the invention was made to use the teachings of Fuller et al (USPNO. 6,933,441) in Walter et al (USPNO. 6,220,413) since it is considered to be an obvious design choice to any such cable port is environmentally sealed . In re Rose, 105 USPQ 237 (CCPA 1955).

Regarding claim 14, wherein the cable port is sealed using a slitted sealing member.

It would have been obvious to one of ordinary skill in the art at the time of the invention was made to use the teachings of Fuller et al (USPNO. 6,933,441) in Walter et al (USPNO. 6,220,413) since it is considered to be an obvious design choice to any such cable port is sealed using a slitted sealing member. In re Rose, 105 USPQ 237 (CCPA 1955).

Regarding claim 15, wherein the cable port is sealed using a slitted foam member.
It would have been obvious to one of ordinary skill in the art at the time of the invention was made to use the teachings of Fuller et al (USPNO. 6,933,441) in Walter et al (USPNO. 6,220,413) since it is considered to be an obvious design choice to any such cable port is sealed using a slitted foam member . In re Rose, 105 USPQ 237 (CCPA 1955).

Regarding claim 16, wherein the optical fiber is one of a plurality of optical fibers of the optical cable, and wherein a respective first end of each of the plurality of optical fibers is terminated at the first optical connector.

Regarding claim 17, wherein a respective second end of each of the plurality of optical fibers is separately terminated at a respective second optical connector, each of the respective second optical connectors rotating in concert with the cable spool when the optical cable is paid out from the cable spool.

Regarding claim 16, wherein the adapter is one of a plurality of adapters disposed within the interior of the main housing; and wherein each of the respective second optical connectors are plugged into one of the plurality of adapters.

Regarding claim 17, wherein connectorized ends of additional subscriber cables are routed into the interior of the main housing and plugged into respective ones of the plurality of adapters when the cover is open.

Regarding claim 18, wherein the cable spool rotates about an axis of rotation oriented to intersect the cover when the cover blocks access to the interior of the main housing.

Regarding claim 19, a method of connecting a subscriber to a fiber optic network using a fiber optic enclosure, the fiber optical enclosure including a main housing and a cover, the main housing having opposite rear and front sides, the cover being movable relative to the main housing between an open position and a closed position, the cover blocking access to an interior of the main housing through the front side when in the closed position and allowing access to the interior through the front side when in the open position, the method comprising: paying out an optical cable from a cable spool disposed within the interior of the main housing, the optical cable extending between a first end and a second end, the first end being routed away from the interior of the main housing while the optical cable is being paid out, the second end rotating in unison with the cable spool within the interior of the main housing while the optical cable is being paid out; routing an end of a subscriber cable into the interior of the main housing while the cover is in the open position; optically coupling the end of the subscriber cable to the second end of the optical cable at an optical adapter disposed within the interior of the main housing while the cover is in the open position; and moving the cover to the closed position to enclose the optical adapter, the end of the subscriber cable, and the second end of the cable within the interior of the main housing.

See above explanation as explained for claim 1 and 19

Regarding claim 20, wherein paying out the optical cable includes pulling on the first end of the optical cable.

Regarding claim 21, wherein the optical cable includes a plurality of optical fibers, wherein the plurality of optical fibers are connectorized at a multi-fiber connector at the first end of the optical cable; and wherein the plurality of optical fibers are individually connectorized at single-fiber connectors at the second end of the optical cable.

Regarding claim 23, wherein the subscriber cable is one of a plurality of subscriber cables and the optical adapter is one of a plurality of optical adapters, and wherein the method further comprises: plugging each of the single-fiber connectors into respective ones of the plurality of optical adapters within the interior of the main housing while the cover is in the

open position; and plugging connectorized ends of the subscriber cables into respective ones of the plurality of optical adapters while the cover is in the open position; wherein moving the cover to the closed position encloses the plurality of optical adapters, the single-fiber connectors, and the connectorized ends of the plurality of subscriber cables.

Regarding claim 24, further comprising mounting the rear side of the main housing to a wall.
It is an inherent teachings of the Walters et al and Fuller et al. references.

EXAMINERS NOTE: A reference to specific paragraphs, columns, pages, or figures in a cited prior art reference is not limited to preferred embodiments or any specific examples. It is well settled that a prior art reference, in its entirety, must be considered for all that it expressly teaches and fairly suggests to one having ordinary skill in the art. Stated differently, a prior art disclosure reading on a limitation of Applicant's claim cannot be ignored on the ground that other embodiments disclosed were instead cited. Therefore, the Examiner's citation to a specific portion of a single prior art reference is not intended to exclusively dictate, but rather, to demonstrate an exemplary disclosure commensurate with the specific limitations being addressed. In re Heck, 699 F.2d 1331, 1332-33,216 USPQ 1038, 1039 (Fed. Cir. 1983) (quoting In re Lemelson, 397 F.2d 1006, 1009, 158 USPQ 275, 277 (CCPA 1968)). In re: Upsher-Smith Labs. v. Pamlab, LLC, 412 F.3d 1319, 1323, 75 USPQ2d 1213, 1215 (Fed. Cir. 2005); In re Fritch, 972 F.2d 1260, 1264, 23 USPQ2d 1780, 1782 (Fed. Cir. 1992); Merck & Co. v. Biocraft Labs., Inc., 874 F.2d 804,807, 10 USPQ2d 1843, 1846 (Fed. Cir. 1989); In re Fracalossi, 681 F.2d 792,794 n.1,215 USPQ 569, 570 n.1 (CCPA 1982); In re Lamberti, 545 F.2d 747, 750, 192 USPQ 278,280 (CCPA 1976); In re Bozek, 416 F.2d 1385, 1390, 163 USPQ 545, 549 (CCPA 1969).

Citation Prior Art

Prior art made of record and not relied upon is considered pertinent to applicants disclosure. In accordance with MPEP 707.05 the following references are pertinent in rejection of this application since they provide substantially the same information disclosure as this patent does.

These references are:

USP NOS. Elliot (USPNO. 7,120,349) and Showronski (2003/0000788).

Contact Information

Any inquiry concerning this communication or earlier communications from the examiner should be directed to Akm Enayet Ullah whose telephone number is 571-272-2361. The examiner can normally be reached on Monday through Thursday from 6:30 am to 5 pm.

If attempts to reach the examiner by telephone are unsuccessful, the examiner's supervisor, Uyen-Chau Le, can be reached on 571-272-2397. The fax phone number for the organization where this application or proceeding is assigned is 571-273-8300.

Information regarding the status of an application may be obtained from the Patent Application Information Retrieval (PAIR) system. Status information for published applications may be obtained from either Private PAIR or Public PAIR. Status information for unpublished applications is available through Private PAIR only. For more information about the PAIR system, see http://pair-direct.uspto.gov. Should you have questions on access to the Private PAIR

system, contact the Electronic Business Center (EBC) at 866-217-9197 (toll-free).

/AKM E ULLAH/
Primary Examiner, Art Unit 2874

Notice of References Cited	Application/Control No. 15/875,605	Applicant(s)/Patent Under Reexamination Kowalczyk et al.	
	Examiner Akm E Ullah	Art Unit 2874	Page 1 of 1

U.S. PATENT DOCUMENTS

*		Document Number Country Code-Number-Kind Code	Date MM-YYYY	Name	CPC Classification	US Classification
*	A	US-7120349-B2	10-2006	Elliott; Stephen J.	G02B6/4457	385/137
*	B	US-20030000788-A1	01-2003	Skowronski, Richard E	H01B7/40	191/12.2R
*	C	US-20050103515-A1	05-2005	Fuller, Denise E.	G02B6/4453	174/50
*	D	US-6220413-B1	04-2001	Walters; Mark D.	G02B6/4457	191/12.4
	E					
	F					
	G					
	H					
	I					
	J					
	K					
	L					
	M					

FOREIGN PATENT DOCUMENTS

*		Document Number Country Code-Number-Kind Code	Date MM-YYYY	Country	Name	CPC Classification
	N					
	O					
	P					
	Q					
	R					
	S					
	T					

NON-PATENT DOCUMENTS

*		Include as applicable: Author, Title Date, Publisher, Edition or Volume, Pertinent Pages)
	U	
	V	
	W	
	X	

*A copy of this reference is not being furnished with this Office action. (See MPEP § 707.05(a).)
Dates in MM-YYYY format are publication dates. Classifications may be US or foreign.

Search Notes	Application/Control No.	Applicant(s)/Patent Under Reexamination
	15/875,605	Kowalczyk et al.
	Examiner	**Art Unit**
	Akm E Ullah	2874

CPC - Searched*		
Symbol	**Date**	**Examiner**
G02B 6/46, 445, 4441, 4457, 4446, 4471, 3897, 4452, 4453, 4453	05/02/2019	AU
G02B6/$.cpc.	05/02/2019	AU
Updated above	11/06/2019	AU

CPC Combination Sets - Searched*		
Symbol	**Date**	**Examiner**

US Classification - Searched*			
Class	**Subclass**	**Date**	**Examiner**
395	130 -135	05/02/2019	AU

* See search history printout included with this form or the SEARCH NOTES box below to determine the scope of the search.

Search Notes		
Search Notes	**Date**	**Examiner**
EAST, INVENTOR and ASSIGNEE	05/02/2019	AU
Updated above	11/06/2019	AU

Interference Search			
US Class/CPC Symbol	**US Subclass/CPC Group**	**Date**	**Examiner**
G02B	6/$; text search limited	05/02/2019	AU

/AKM E ULLAH/ Primary Examiner, Art Unit 2874	

Index of Claims	Application/Control No.	Applicant(s)/Patent Under Reexamination
	15/875,605	Kowalczyk et al.
	Examiner	**Art Unit**
	Akm E Ullah	2874

✓	Rejected	-	Cancelled	N	Non-Elected	A	Appeal
=	Allowed	÷	Restricted	I	Interference	O	Objected

CLAIMS

☑ Claims renumbered in the same order as presented by applicant ☐ CPA ☐ T.D. ☐ R.1.47

CLAIM		DATE								
Final	Original	05/02/2019	11/06/2019							
	1	=	✓							
	2	=	✓							
	3	=	✓							
	4	=	✓							
	5	=	✓							
	6	=	✓							
	7	=	✓							
	8	=	✓							
	9	=	✓							
	10	=	✓							
	11	=	✓							
	12	=	✓							
	13	=	✓							
	14	=	✓							
	15	=	✓							
	16	=	✓							
	17	=	✓							
	18	=	✓							
	19	=	✓							
	20	=	✓							
	21	=	✓							
	22	=	✓							
	23	=	✓							
	24	=	✓							

EAST Search History

EAST Search History (Prior Art)

Ref #	Hits	Search Query	DBs	Default Operator	Plurals	Time Stamp
L1	2	"15875605"	US-PGPUB; USPAT; USOCR; FPRS; EPO; JPO; DERWENT; IBM_TDB	OR	OFF	2019/11/05 15:04
L2	172	(fiber adj3 optic with network)and(fiber adj3 optic with enclosure)and (cable adj5 spool)and adapter and cover	US-PGPUB; USPAT; USOCR; FPRS; EPO; JPO; DERWENT; IBM_TDB	OR	OFF	2019/11/05 15:09
L3	31	(cable adj3 spool with rotat$4 with connector adj5 rotat$3)	US-PGPUB; USPAT; USOCR; FPRS; EPO; JPO; DERWENT; IBM_TDB	OR	OFF	2019/11/05 15:10
L4	109	(cable adj3 spool with rotat$4 with adapter)	US-PGPUB; USPAT; USOCR; FPRS; EPO; JPO; DERWENT; IBM_TDB	OR	OFF	2019/11/05 15:12
L5	9	2 and 3 and 4	US-PGPUB; USPAT; USOCR; FPRS; EPO; JPO; DERWENT; IBM_TDB	OR	OFF	2019/11/05 15:20
L6	75	2 and 4	US-PGPUB; USPAT; USOCR; FPRS; EPO; JPO; DERWENT; IBM_TDB	OR	OFF	2019/11/05 15:39
L7	2	2 and @pd< "20070806"	US-PGPUB; USPAT; USOCR; FPRS; EPO; JPO; DERWENT; IBM_TDB	OR	OFF	2019/11/05 16:28
L8	2	4 and @pd< "20070806"	US-PGPUB; USPAT; USOCR; FPRS; EPO; JPO; DERWENT; IBM_TDB	OR	OFF	2019/11/05 16:28

11/5/2019 4:33:53 PM

EAST Search History

EAST Search History (Prior Art)

Ref #	Hits	Search Query	DBs	Default Operator	Plurals	Time Stamp
L1	2	"15875605"	US-PGPUB; USPAT; USOCR; FPRS; EPO; JPO; DERWENT; IBM_TDB	OR	OFF	2019/11/05 15:04
L2	172	(fiber adj3 optic with network)and(fiber adj3 optic with enclosure)and (cable adj5 spool)and adapter and cover	US-PGPUB; USPAT; USOCR; FPRS; EPO; JPO; DERWENT; IBM_TDB	OR	OFF	2019/11/05 15:09
L3	31	(cable adj3 spool with rotat$4 with connector adj5 rotat$3)	US-PGPUB; USPAT; USOCR; FPRS; EPO; JPO; DERWENT; IBM_TDB	OR	OFF	2019/11/05 15:10
L4	109	(cable adj3 spool with rotat$4 with adapter)	US-PGPUB; USPAT; USOCR; FPRS; EPO; JPO; DERWENT; IBM_TDB	OR	OFF	2019/11/05 15:12
L5	9	2 and 3 and 4	US-PGPUB; USPAT; USOCR; FPRS; EPO; JPO; DERWENT; IBM_TDB	OR	OFF	2019/11/05 15:20
L6	75	2 and 4	US-PGPUB; USPAT; USOCR; FPRS; EPO; JPO; DERWENT; IBM_TDB	OR	OFF	2019/11/05 15:39

11/ 5/ 2019 4:01:59 PM

Doc code: IDS
Doc description: Information Disclosure Statement (IDS) Filed

PTO/SB/08a (02-18)
Approved for use through 11/30/2020. OMB 0651-0031
U.S. Patent and Trademark Office; U.S. DEPARTMENT OF COMMERCE
Under the Paperwork Reduction Act of 1995, no persons are required to respond to a collection of information unless it contains a valid OMB control number.

INFORMATION DISCLOSURE STATEMENT BY APPLICANT

(Not for submission under 37 CFR 1.99)

Application Number	15875605
Filing Date	2018-01-19
First Named Inventor	Scott C. Kowalczyk
Art Unit	2874
Examiner Name	Ullah, Akm E.
Attorney Docket Number	02316.2584US23/ADC003176

U.S.PATENTS Remove

Examiner Initial*	Cite No	Patent Number	Kind Code[1]	Issue Date	Name of Patentee or Applicant of cited Document	Pages,Columns,Lines where Relevant Passages or Relevant Figures Appear
	1	4379615		1983-04-12	Toda et al.	
	2	7065282	B2	2006-06-20	Sasaki et al.	
	3	8265447	B2	2012-09-11	Loeffelholz et al.	
	4	8818157	B2	2014-08-26	Burek et al.	
	5	9223103	B2	2015-12-29	Kachmar	
	6	9310578	B2	2016-04-12	Vastmans et al.	
	7	9429728	B2	2016-08-30	Puetz et al.	
	8	9453971	B2	2016-09-27	Anderson et al.	

ALL REFERENCES CONSIDERED EXCEPT WHERE LINED THROUGH. /A.E.U./

INFORMATION DISCLOSURE STATEMENT BY APPLICANT

(Not for submission under 37 CFR 1.99)

Application Number	15875605
Filing Date	2018-01-19
First Named Inventor	Scott C. Kowalczyk
Art Unit	2874
Examiner Name	Ullah, Akm E.
Attorney Docket Number	02316.2584US23/ADC003176

	9	9664871	B1	2017-05-30	Galvan Mijangos et al.	
	10	9684142	B2	2017-06-20	Collart et al.	
	11	9703063	B2	2017-07-11	Van Baelen et al.	
	12	9766414	B2	2017-09-19	Marcouiller et al.	
	13	9885846	B2	2018-02-06	Kowalczyk et al.	
	14	9995898	B2	2018-06-12	Krampotich et al.	
	15	RE47307		2019-03-19	Allen	
	16	10234648	B2	2019-03-19	Kowalczyk et al.	

If you wish to add additional U.S. Patent citation information please click the Add button. Add

U.S.PATENT APPLICATION PUBLICATIONS Remove

Examiner Initial*	Cite No	Publication Number	Kind Code[1]	Publication Date	Name of Patentee or Applicant of cited Document	Pages,Columns,Lines where Relevant Passages or Relevant Figures Appear
	1	20050002633	A1	2005-01-06	Solheid et al.	

ALL REFERENCES CONSIDERED EXCEPT WHERE LINED THROUGH. /A.E.U.

INFORMATION DISCLOSURE STATEMENT BY APPLICANT (Not for submission under 37 CFR 1.99)		
	Application Number	15875605
	Filing Date	2018-01-19
	First Named Inventor	Scott C. Kowalczyk
	Art Unit	2874
	Examiner Name	Ullah, Akm E.
	Attorney Docket Number	02316.2584US23/ADC003176

	2	20060153516	A1	2006-07-13	Napiorkowski et al.	
	3	20140219622	A1	2014-08-07	Coan et al.	
	4	20170235079	A1	2017-08-17	Kowalczyk et al.	

If you wish to add additional U.S. Published Application citation information please click the Add button. Add

FOREIGN PATENT DOCUMENTS Remove

Examiner Initial*	Cite No	Foreign Document Number[3]	Country Code[2] i	Kind Code[4]	Publication Date	Name of Patentee or Applicant of cited Document	Pages,Columns,Lines where Relevant Passages or Relevant Figures Appear	T[5]
	1	2007-121598	JP		2007-05-17	Japan Recom Ltd. et al.		X

If you wish to add additional Foreign Patent Document citation information please click the Add button Add

NON-PATENT LITERATURE DOCUMENTS Remove

Examiner Initials*	Cite No	Include name of the author (in CAPITAL LETTERS), title of the article (when appropriate), title of the item (book, magazine, journal, serial, symposium, catalog, etc), date, pages(s), volume-issue number(s), publisher, city and/or country where published.	T[5]
	1		

If you wish to add additional non-patent literature document citation information please click the Add button Add

EXAMINER SIGNATURE

Examiner Signature	/AKM E ULLAH/	Date Considered	11/06/2019

*EXAMINER: Initial if reference considered, whether or not citation is in conformance with MPEP 609. Draw line through a citation if not in conformance and not considered. Include copy of this form with next communication to applicant.

ALL REFERENCES CONSIDERED EXCEPT WHERE LINED THROUGH. /A.E.U/

INFORMATION DISCLOSURE STATEMENT BY APPLICANT

(Not for submission under 37 CFR 1.99)

Application Number	15875605
Filing Date	2018-01-19
First Named Inventor	Scott C. Kowalczyk
Art Unit	2874
Examiner Name	Ullah, Akm E.
Attorney Docket Number	02316.2584US23/ADC003176

[1] See Kind Codes of USPTO Patent Documents at www.USPTO.GOV or MPEP 901.04. [2] Enter office that issued the document, by the two-letter code (WIPO Standard ST.3). [3] For Japanese patent documents, the indication of the year of the reign of the Emperor must precede the serial number of the patent document. [4] Kind of document by the appropriate symbols as indicated on the document under WIPO Standard ST.16 if possible. [5] Applicant is to place a check mark here if English language translation is attached.

ALL REFERENCES CONSIDERED EXCEPT WHERE LINED THROUGH. /A.E.U./

INFORMATION DISCLOSURE STATEMENT BY APPLICANT

(Not for submission under 37 CFR 1.99)

Application Number	15875605
Filing Date	2018-01-19
First Named Inventor	Scott C. Kowalczyk
Art Unit	2874
Examiner Name	Ullah, Akm E.
Attorney Docket Number	02316.2584US23/ADC003176

CERTIFICATION STATEMENT

Please see 37 CFR 1.97 and 1.98 to make the appropriate selection(s):

That each item of information contained in the information disclosure statement was first cited in any communication from a foreign patent office in a counterpart foreign application not more than three months prior to the filing of the information disclosure statement. See 37 CFR 1.97(e)(1).

OR

☐ That no item of information contained in the information disclosure statement was cited in a communication from a foreign patent office in a counterpart foreign application, and, to the knowledge of the person signing the certification after making reasonable inquiry, no item of information contained in the information disclosure statement was known to any individual designated in 37 CFR 1.56(c) more than three months prior to the filing of the information disclosure statement. See 37 CFR 1.97(e)(2).

See attached certification statement.

The fee set forth in 37 CFR 1.17 (p) has been submitted herewith.

☒ A certification statement is not submitted herewith.

SIGNATURE

A signature of the applicant or representative is required in accordance with CFR 1.33, 10.18. Please see CFR 1.4(d) for the form of the signature.

Signature	/Julie K. Skoge/	Date (YYYY-MM-DD)	2019-08-05
Name/Print	Julie K. Skoge	Registration Number	63,431

This collection of information is required by 37 CFR 1.97 and 1.98. The information is required to obtain or retain a benefit by the public which is to file (and by the USPTO to process) an application. Confidentiality is governed by 35 U.S.C. 122 and 37 CFR 1.14. This collection is estimated to take 1 hour to complete, including gathering, preparing and submitting the completed application form to the USPTO. Time will vary depending upon the individual case. Any comments on the amount of time you require to complete this form and/or suggestions for reducing this burden, should be sent to the Chief Information Officer, U.S. Patent and Trademark Office, U.S. Department of Commerce, P.O. Box 1450, Alexandria, VA 22313-1450. DO NOT SEND FEES OR COMPLETED FORMS TO THIS ADDRESS. **SEND TO: Commissioner for Patents, P.O. Box 1450, Alexandria, VA 22313-1450.**

ALL REFERENCES CONSIDERED EXCEPT WHERE LINED THROUGH. /A.E.U.

Privacy Act Statement

The Privacy Act of 1974 (P.L. 93-579) requires that you be given certain information in connection with your submission of the attached form related to a patent application or patent. Accordingly, pursuant to the requirements of the Act, please be advised that: (1) the general authority for the collection of this information is 35 U.S.C. 2(b)(2); (2) furnishing of the information solicited is voluntary; and (3) the principal purpose for which the information is used by the U.S. Patent and Trademark Office is to process and/or examine your submission related to a patent application or patent. If you do not furnish the requested information, the U.S. Patent and Trademark Office may not be able to process and/or examine your submission, which may result in termination of proceedings or abandonment of the application or expiration of the patent.

The information provided by you in this form will be subject to the following routine uses:

1. The information on this form will be treated confidentially to the extent allowed under the Freedom of Information Act (5 U.S.C. 552) and the Privacy Act (5 U.S.C. 552a). Records from this system of records may be disclosed to the Department of Justice to determine whether the Freedom of Information Act requires disclosure of these record s.

2. A record from this system of records may be disclosed, as a routine use, in the course of presenting evidence to a court, magistrate, or administrative tribunal, including disclosures to opposing counsel in the course of settlement negotiations.

3. A record in this system of records may be disclosed, as a routine use, to a Member of Congress submitting a request involving an individual, to whom the record pertains, when the individual has requested assistance from the Member with respect to the subject matter of the record.

4. A record in this system of records may be disclosed, as a routine use, to a contractor of the Agency having need for the information in order to perform a contract. Recipients of information shall be required to comply with the requirements of the Privacy Act of 1974, as amended, pursuant to 5 U.S.C. 552a(m).

5. A record related to an International Application filed under the Patent Cooperation Treaty in this system of records may be disclosed, as a routine use, to the International Bureau of the World Intellectual Property Organization, pursuant to the Patent Cooperation Treaty.

6. A record in this system of records may be disclosed, as a routine use, to another federal agency for purposes of National Security review (35 U.S.C. 181) and for review pursuant to the Atomic Energy Act (42 U.S.C. 218(c)).

7. A record from this system of records may be disclosed, as a routine use, to the Administrator, General Services, or his/her designee, during an inspection of records conducted by GSA as part of that agency's responsibility to recommend improvements in records management practices and programs, under authority of 44 U.S.C. 2904 and 2906. Such disclosure shall be made in accordance with the GSA regulations governing inspection of records for this purpose, and any other relevant (i.e., GSA or Commerce) directive. Such disclosure shall not be used to make determinations about individuals.

8. A record from this system of records may be disclosed, as a routine use, to the public after either publication of the application pursuant to 35 U.S.C. 122(b) or issuance of a patent pursuant to 35 U.S.C. 151. Further, a record may be disclosed, subject to the limitations of 37 CFR 1.14, as a routine use, to the public if the record was filed in an application which became abandoned or in which the proceedings were terminated and which application is referenced by either a published application, an application open to public inspections or an issued patent.

9. A record from this system of records may be disclosed, as a routine use, to a Federal, State, or local law enforcement agency, if the USPTO becomes aware of a violation or potential violation of law or regulation.

ALL REFERENCES CONSIDERED EXCEPT WHERE LINED THROUGH. /A.E.D.

PTO/SB/30EFS (02-18)
Approved for use through 11/30/2020. OMB 0651-0031
U.S. Patent and Trademark Office; U.S. DEPARTMENT OF COMMERCE
Under the Paperwork Reduction Act of 1995, no persons are required to respond to a collection of information unless it contains a valid OMB control number.

REQUEST FOR CONTINUED EXAMINATION(RCE)TRANSMITTAL
(Submitted Only via EFS-Web)

Application Number	15875605	Filing Date	2018-01-19	Docket Number (if applicable)	02316.2584US23/ADC00317	Art Unit	2874
First Named Inventor	Scott C. Kowalczyk			Examiner Name	Ullah, Akm E.		

This is a Request for Continued Examination (RCE) under 37 CFR 1.114 of the above-identified application.
Request for Continued Examination (RCE) practice under 37 CFR 1.114 does not apply to any utility or plant application filed prior to June 8, 1995, or to any design application. The Instruction Sheet for this form is located at WWW.USPTO.GOV

SUBMISSION REQUIRED UNDER 37 CFR 1.114

Note: If the RCE is proper, any previously filed unentered amendments and amendments enclosed with the RCE will be entered in the order in which they were filed unless applicant instructs otherwise. If applicant does not wish to have any previously filed unentered amendment(s) entered, applicant must request non-entry of such amendment(s).

☐ Previously submitted. If a final Office action is outstanding, any amendments filed after the final Office action may be considered as a submission even if this box is not checked.

- ☐ Consider the arguments in the Appeal Brief or Reply Brief previously filed on _____
- ☐ Other _____

☒ Enclosed

- ☐ Amendment/Reply
- ☒ Information Disclosure Statement (IDS)
- ☐ Affidavit(s)/ Declaration(s)
- ☐ Other _____

MISCELLANEOUS

☐ Suspension of action on the above-identified application is requested under 37 CFR 1.103(c) for a period of months _____
(Period of suspension shall not exceed 3 months; Fee under 37 CFR 1.17(i) required)

☐ Other _____

FEES

The RCE fee under 37 CFR 1.17(e) is required by 37 CFR 1.114 when the RCE is filed.
☒ The Director is hereby authorized to charge any underpayment of fees, or credit any overpayments, to Deposit Account No 132725

SIGNATURE OF APPLICANT, ATTORNEY, OR AGENT REQUIRED

X Patent Practitioner Signature
Applicant Signature

PTO/SB/30EFS (02-18)
Approved for use through 11/30/2020. OMB 0651-0031
U.S. Patent and Trademark Office; U.S. DEPARTMENT OF COMMERCE
Under the Paperwork Reduction Act of 1995, no persons are required to respond to a collection of information unless it contains a valid OMB control number.

Signature of Registered U.S. Patent Practitioner			
Signature	/Julie K. Skoge/	Date (YYYY-MM-DD)	2019-08-05
Name	Julie K. Skoge	Registration Number	63431

This collection of information is required by 37 CFR 1.114. The information is required to obtain or retain a benefit by the public which is to file (and by the USPTO to process) an application. Confidentiality is governed by 35 U.S.C. 122 and 37 CFR 1.11 and 1.14. This collection is estimated to take 12 minutes to complete, including gathering, preparing, and submitting the completed application form to the USPTO. Time will vary depending upon the individual case. Any comments on the amount of time you require to complete this form and/or suggestions for reducing this burden, should be sent to the Chief Information Officer, U.S. Patent and Trademark Office, U.S. Department of Commerce, P.O. Box 1450, Alexandria, VA 22313-1450.

If you need assistance in completing the form, call 1-800-PTO-9199 and select option 2.

Privacy Act Statement

The Privacy Act of 1974 (P.L. 93-579) requires that you be given certain information in connection with your submission of the attached form related to a patent application or patent. Accordingly, pursuant to the requirements of the Act, please be advised that: (1) the general authority for the collection of this information is 35 U.S.C. 2(b)(2); (2) furnishing of the information solicited is voluntary; and (3) the principal purpose for which the information is used by the U.S. Patent and Trademark Office is to process and/or examine your submission related to a patent application or patent. If you do not furnish the requested information, the U.S. Patent and Trademark Office may not be able to process and/or examine your submission, which may result in termination of proceedings or abandonment of the application or expiration of the patent.

The information provided by you in this form will be subject to the following routine uses:

1. The information on this form will be treated confidentially to the extent allowed under the Freedom of Information Act (5 U.S.C. 552) and the Privacy Act (5 U.S.C. 552a). Records from this system of records may be disclosed to the Department of Justice to determine whether the Freedom of Information Act requires disclosure of these records.

2. A record from this system of records may be disclosed, as a routine use, in the course of presenting evidence to a court, magistrate, or administrative tribunal, including disclosures to opposing counsel in the course of settlement negotiations.

3. A record in this system of records may be disclosed, as a routine use, to a Member of Congress submitting a request involving an individual, to whom the record pertains, when the individual has requested assistance from the Member with respect to the subject matter of the record.

4. A record in this system of records may be disclosed, as a routine use, to a contractor of the Agency having need for the information in order to perform a contract. Recipients of information shall be required to comply with the requirements of the Privacy Act of 1974, as amended, pursuant to 5 U.S.C. 552a(m).

5. A record related to an International Application filed under the Patent Cooperation Treaty in this system of records may be disclosed, as a routine use, to the International Bureau of the World Intellectual Property Organization, pursuant to the Patent Cooperation Treaty.

6. A record in this system of records may be disclosed, as a routine use, to another federal agency for purposes of National Security review (35 U.S.C. 181) and for review pursuant to the Atomic Energy Act (42 U.S.C. 218(c)).

7. A record from this system of records may be disclosed, as a routine use, to the Administrator, General Services, or his/her designee, during an inspection of records conducted by GSA as part of that agency's responsibility to recommend improvements in records management practices and programs, under authority of 44 U.S.C. 2904 and 2906. Such disclosure shall be made in accordance with the GSA regulations governing inspection of records for this purpose, and any other relevant (i.e., GSA or Commerce) directive. Such disclosure shall not be used to make determinations about individuals.

8. A record from this system of records may be disclosed, as a routine use, to the public after either publication of the application pursuant to 35 U.S.C. 122(b) or issuance of a patent pursuant to 35 U.S.C. 151. Further, a record may be disclosed, subject to the limitations of 37 CFR 1.14, as a routine use, to the public if the record was filed in an application which became abandoned or in which the proceedings were terminated and which application is referenced by either a published application, an application open to public inspections or an issued patent.

9. A record from this system of records may be disclosed, as a routine use, to a Federal, State, or local law enforcement agency, if the USPTO becomes aware of a violation or potential violation of law or regulation.

PTO/SB/08a (02-18)
Approved for use through 11/30/2020. OMB 0651-0031
U.S. Patent and Trademark Office; U.S. DEPARTMENT OF COMMERCE
Under the Paperwork Reduction Act of 1995, no persons are required to respond to a collection of information unless it contains a valid OMB control number.

INFORMATION DISCLOSURE STATEMENT BY APPLICANT

(Not for submission under 37 CFR 1.99)

Application Number	15875605
Filing Date	2018-01-19
First Named Inventor	Scott C. Kowalczyk
Art Unit	2874
Examiner Name	Ullah, Akm E.
Attorney Docket Number	02316.2584US23/ADC003176

U.S.PATENTS Remove

Examiner Initial*	Cite No	Patent Number	Kind Code[1]	Issue Date	Name of Patentee or Applicant of cited Document	Pages,Columns,Lines where Relevant Passages or Relevant Figures Appear
	1	4379615		1983-04-12	Toda et al.	
	2	7065282	B2	2006-06-20	Sasaki et al.	
	3	8265447	B2	2012-09-11	Loeffelholz et al.	
	4	8818157	B2	2014-08-26	Burek et al.	
	5	9223103	B2	2015-12-29	Kachmar	
	6	9310578	B2	2016-04-12	Vastmans et al.	
	7	9429728	B2	2016-08-30	Puetz et al.	
	8	9453971	B2	2016-09-27	Anderson et al.	

INFORMATION DISCLOSURE STATEMENT BY APPLICANT (Not for submission under 37 CFR 1.99)	Application Number	15875605
	Filing Date	2018-01-19
	First Named Inventor	Scott C. Kowalczyk
	Art Unit	2874
	Examiner Name	Ullah, Akm E.
	Attorney Docket Number	02316.2584US23/ADC003176

	9	9664871	B1	2017-05-30	Galvan Mijangos et al.	
	10	9684142	B2	2017-06-20	Collart et al.	
	11	9703063	B2	2017-07-11	Van Baelen et al.	
	12	9766414	B2	2017-09-19	Marcouiller et al.	
	13	9885846	B2	2018-02-06	Kowalczyk et al.	
	14	9995898	B2	2018-06-12	Krampotich et al.	
	15	RE47307		2019-03-19	Allen	
	16	10234648	B2	2019-03-19	Kowalczyk et al.	

If you wish to add additional U.S. Patent citation information please click the Add button. Add

U.S.PATENT APPLICATION PUBLICATIONS Remove

Examiner Initial*	Cite No	Publication Number	Kind Code[1]	Publication Date	Name of Patentee or Applicant of cited Document	Pages,Columns,Lines where Relevant Passages or Relevant Figures Appear
	1	20050002633	A1	2005-01-06	Solheid et al.	

INFORMATION DISCLOSURE STATEMENT BY APPLICANT (Not for submission under 37 CFR 1.99)		
	Application Number	15875605
	Filing Date	2018-01-19
	First Named Inventor	Scott C. Kowalczyk
	Art Unit	2874
	Examiner Name	Ullah, Akm E.
	Attorney Docket Number	02316.2584US23/ADC003176

	2	20060153516	A1	2006-07-13	Napiorkowski et al.	
	3	20140219622	A1	2014-08-07	Coan et al.	
	4	20170235079	A1	2017-08-17	Kowalczyk et al.	

If you wish to add additional U.S. Published Application citation information please click the Add button. Add

FOREIGN PATENT DOCUMENTS Remove

Examiner Initial*	Cite No	Foreign Document Number[3]	Country Code[2] i	Kind Code[4]	Publication Date	Name of Patentee or Applicant of cited Document	Pages,Columns,Lines where Relevant Passages or Relevant Figures Appear	T[5]
	1	2007-121598	JP		2007-05-17	Japan Recom Ltd. et al.		X

If you wish to add additional Foreign Patent Document citation information please click the Add button Add

NON-PATENT LITERATURE DOCUMENTS Remove

Examiner Initials*	Cite No	Include name of the author (in CAPITAL LETTERS), title of the article (when appropriate), title of the item (book, magazine, journal, serial, symposium, catalog, etc), date, pages(s), volume-issue number(s), publisher, city and/or country where published.	T[5]
	1		

If you wish to add additional non-patent literature document citation information please click the Add button Add

EXAMINER SIGNATURE

Examiner Signature		Date Considered	

*EXAMINER: Initial if reference considered, whether or not citation is in conformance with MPEP 609. Draw line through a citation if not in conformance and not considered. Include copy of this form with next communication to applicant.

INFORMATION DISCLOSURE STATEMENT BY APPLICANT (Not for submission under 37 CFR 1.99)	Application Number	15875605
	Filing Date	2018-01-19
	First Named Inventor	Scott C. Kowalczyk
	Art Unit	2874
	Examiner Name	Ullah, Akm E.
	Attorney Docket Number	02316.2584US23/ADC003176

[1] See Kind Codes of USPTO Patent Documents at www.USPTO.GOV or MPEP 901.04. [2] Enter office that issued the document, by the two-letter code (WIPO Standard ST.3). [3] For Japanese patent documents, the indication of the year of the reign of the Emperor must precede the serial number of the patent document. [4] Kind of document by the appropriate symbols as indicated on the document under WIPO Standard ST.16 if possible. [5] Applicant is to place a check mark here if English language translation is attached.

INFORMATION DISCLOSURE STATEMENT BY APPLICANT (Not for submission under 37 CFR 1.99)	Application Number	15875605
	Filing Date	2018-01-19
	First Named Inventor	Scott C. Kowalczyk
	Art Unit	2874
	Examiner Name	Ullah, Akm E.
	Attorney Docket Number	02316.2584US23/ADC003176

CERTIFICATION STATEMENT

Please see 37 CFR 1.97 and 1.98 to make the appropriate selection(s):

That each item of information contained in the information disclosure statement was first cited in any communication from a foreign patent office in a counterpart foreign application not more than three months prior to the filing of the information disclosure statement. See 37 CFR 1.97(e)(1).

OR

☐ That no item of information contained in the information disclosure statement was cited in a communication from a foreign patent office in a counterpart foreign application, and, to the knowledge of the person signing the certification after making reasonable inquiry, no item of information contained in the information disclosure statement was known to any individual designated in 37 CFR 1.56(c) more than three months prior to the filing of the information disclosure statement. See 37 CFR 1.97(e)(2).

See attached certification statement.

The fee set forth in 37 CFR 1.17 (p) has been submitted herewith.

☒ A certification statement is not submitted herewith.

SIGNATURE

A signature of the applicant or representative is required in accordance with CFR 1.33, 10.18. Please see CFR 1.4(d) for the form of the signature.

Signature	/Julie K. Skoge/	Date (YYYY-MM-DD)	2019-08-05
Name/Print	Julie K. Skoge	Registration Number	63,431

This collection of information is required by 37 CFR 1.97 and 1.98. The information is required to obtain or retain a benefit by the public which is to file (and by the USPTO to process) an application. Confidentiality is governed by 35 U.S.C. 122 and 37 CFR 1.14. This collection is estimated to take 1 hour to complete, including gathering, preparing and submitting the completed application form to the USPTO. Time will vary depending upon the individual case. Any comments on the amount of time you require to complete this form and/or suggestions for reducing this burden, should be sent to the Chief Information Officer, U.S. Patent and Trademark Office, U.S. Department of Commerce, P.O. Box 1450, Alexandria, VA 22313-1450. DO NOT SEND FEES OR COMPLETED FORMS TO THIS ADDRESS. **SEND TO: Commissioner for Patents, P.O. Box 1450, Alexandria, VA 22313-1450.**

Privacy Act Statement

The Privacy Act of 1974 (P.L. 93-579) requires that you be given certain information in connection with your submission of the attached form related to a patent application or patent. Accordingly, pursuant to the requirements of the Act, please be advised that: (1) the general authority for the collection of this information is 35 U.S.C. 2(b)(2); (2) furnishing of the information solicited is voluntary; and (3) the principal purpose for which the information is used by the U.S. Patent and Trademark Office is to process and/or examine your submission related to a patent application or patent. If you do not furnish the requested information, the U.S. Patent and Trademark Office may not be able to process and/or examine your submission, which may result in termination of proceedings or abandonment of the application or expiration of the patent.

The information provided by you in this form will be subject to the following routine uses:

1. The information on this form will be treated confidentially to the extent allowed under the Freedom of Information Act (5 U.S.C. 552) and the Privacy Act (5 U.S.C. 552a). Records from this system of records may be disclosed to the Department of Justice to determine whether the Freedom of Information Act requires disclosure of these record s.

2. A record from this system of records may be disclosed, as a routine use, in the course of presenting evidence to a court, magistrate, or administrative tribunal, including disclosures to opposing counsel in the course of settlement negotiations.

3. A record in this system of records may be disclosed, as a routine use, to a Member of Congress submitting a request involving an individual, to whom the record pertains, when the individual has requested assistance from the Member with respect to the subject matter of the record.

4. A record in this system of records may be disclosed, as a routine use, to a contractor of the Agency having need for the information in order to perform a contract. Recipients of information shall be required to comply with the requirements of the Privacy Act of 1974, as amended, pursuant to 5 U.S.C. 552a(m).

5. A record related to an International Application filed under the Patent Cooperation Treaty in this system of records may be disclosed, as a routine use, to the International Bureau of the World Intellectual Property Organization, pursuant to the Patent Cooperation Treaty.

6. A record in this system of records may be disclosed, as a routine use, to another federal agency for purposes of National Security review (35 U.S.C. 181) and for review pursuant to the Atomic Energy Act (42 U.S.C. 218(c)).

7. A record from this system of records may be disclosed, as a routine use, to the Administrator, General Services, or his/her designee, during an inspection of records conducted by GSA as part of that agency's responsibility to recommend improvements in records management practices and programs, under authority of 44 U.S.C. 2904 and 2906. Such disclosure shall be made in accordance with the GSA regulations governing inspection of records for this purpose, and any other relevant (i.e., GSA or Commerce) directive. Such disclosure shall not be used to make determinations about individuals.

8. A record from this system of records may be disclosed, as a routine use, to the public after either publication of the application pursuant to 35 U.S.C. 122(b) or issuance of a patent pursuant to 35 U.S.C. 151. Further, a record may be disclosed, subject to the limitations of 37 CFR 1.14, as a routine use, to the public if the record was filed in an application which became abandoned or in which the proceedings were terminated and which application is referenced by either a published application, an application open to public inspections or an issued patent.

9. A record from this system of records may be disclosed, as a routine use, to a Federal, State, or local law enforcement agency, if the USPTO becomes aware of a violation or potential violation of law or regulation.

PAT-NO: JP02007121598A
DOCUMENT-IDENTIFIER: JP 2007121598 A
TITLE: TERMINATION BOARD IN CLOSURE FOR CONNECTING OPTICAL CABLE
PUBN-DATE: May 17, 2007

INVENTOR-INFORMATION:

NAME	COUNTRY
KOSHIYAMA, MITSUHARU	N/A
TSURUTA, IKUYA	N/A
OSHIMA, YOSHIHISA	N/A
NISHIMURA, AKIHITO	N/A
IWAMOTO, HISAYA	N/A
AONO, TETSUAKI	N/A
ISHIHARA, TATSUYA	N/A
MACHINO, KOJI	N/A
HASHIGUCHI, MASAHIRO	N/A
AWAMORI, MASAFUMI	N/A

ASSIGNEE-INFORMATION:

NAME	COUNTRY
JAPAN RECOM LTD	N/A
NIPPON TSUSHIN DENZAI KK	N/A
NIPPON TELEGR & TELEPH CORP	N/A

APPL-NO: JP2005312329
APPL-DATE: October 27, 2005

INT-CL-ISSUED:

TYPE	IPC DATE	IPC-OLD
IPCP	G02B6/00 20060101	G02B006/00

ABSTRACT:

PROBLEM TO BE SOLVED: To provide a termination board in a closure for connecting an optical cable permitting a single core application without affecting other coated optical fibers in the cases of pull-down wiring and branch connection wiring from an optical cable; allowing vacant coated optical fibers to be used as single coated optical fibers for subsequent subscribers to raise a use efficiency of the coated optical fibers; substantially improving workability such as coated optical fiber storing work, check and repair by making the

connections and storing of the coated optical fibers into a connector-connectable configuration; and also maintaining a favorable transmission characteristic.

SOLUTION: The termination board 11 is arranged to be able to mount two or more connectors C as connection parts of main coated optical fibers a of an optical cable A in a connector mounting part, and in order to connect the coated optical fibers to each of the terminating tray and/or splitter tray configured to be connector-connectable via the termination board 11, a wiring hold part 111 which makes a single coated optical fiber led into the termination board 11 curve and run along the outside surface is formed, and a round shaped guide 15 which holds down the coated optical fiber to be freely attachable/detachable to/from the wiring hold part 111 and guides and holds it to a connector mounting part 14 is pivotally supported so as to be freely turnable, and also the connectors connected to the single coated optical fibers are arranged in the connector mounting part 14.

COPYRIGHT: (C)2007,JPO&INPIT

(19)日本国特許庁(JP)　(12)公開特許公報(A)　(11)特許出願公開番号
特開2007-121598
(P2007-121598A)
(43)公開日　平成19年5月17日(2007.5.17)

(51)Int.Cl.		F I			テーマコード（参考）
G02B 6/00	(2006.01)	G02B	6/00	336	2H038

審査請求 未請求　請求項の数 9　ＯＬ　（全 24 頁）

(21)出願番号　特願2005-312329 (P2005-312329)
(22)出願日　平成17年10月27日 (2005.10.27)

(71)出願人　595083051
株式会社ジャパンリーコム
東京都渋谷区代々木４－３５－３
(71)出願人　000231936
日本通信電材株式会社
愛知県小牧市東１丁目２２６番地
(71)出願人　000004226
日本電信電話株式会社
東京都千代田区大手町二丁目３番１号
(74)代理人　100097021
弁理士　藤井　紘一
(74)代理人　100090631
弁理士　依田　孝次郎

最終頁に続く

(54)【発明の名称】光ケーブル接続用クロージャにおける成端盤

(57)【要約】
【課題】光ケーブルからの引き落とし配線及び分岐接続配線の際に、他の心線に影響を与えないで単心運用でき、空いている心線は、その後のユーザの加入などの単心線として用いて心線使用効率を高め、心線接続・収納をコネクタ接続可能の構成として心線収納作業、点検補修等の施工性を大幅に向上させ、伝送特性も良好に維持する。
【解決手段】光ケーブルＡの主心線ａの接続部となるコネクタＣを複数コネクタ取付部に配備できる成端盤１１とし、該成端盤１１を経由して、コネクタ接続可能の構成とした成端トレイおよび／またはスプリッタトレイの各トレイに接続するのに、前記成端盤１１に導入される単心線を外側面に湾曲して沿わせる配線保持部１１$_1$を形成し、該配線保持部１１$_1$上の心線を接離自在に押さえ込みコネクタ取付部１４に案内保持するアール状ガイド１５を回動自在に枢支し、かつ単心線に接続したコネクタをコネクタ取付部１４に配備した。
【選択図】図３

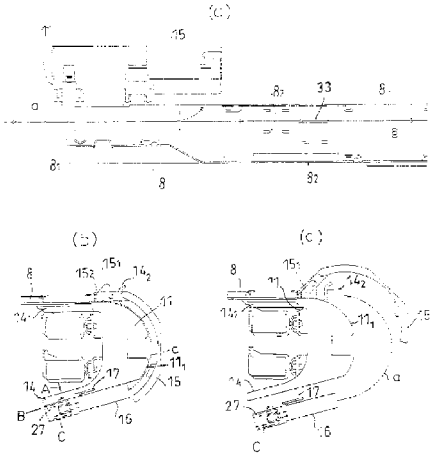

【特許請求の範囲】
【請求項１】
光ケーブル心線の接続部となるコネクタを収納するコネクタ収納部と、心線余長を収納する心線余長収納部とを備えてコネクタ接続を可能にした構成の成端トレイおよび／またはスプリッタトレイをクロージャ本体内に内装する光ケーブル接続用クロージャに用いられる成端盤が、前記成端トレイおよび／またはスプリッタトレイの各トレイに接続される心線に設けたコネクタを複数着脱自在に取り付けられるコネクタ取付部のある成端盤とし、該成端盤に導入される単心線を外側面に湾曲して沿わせる配線保持部を形成し、該配線保持部上の単心線を接離自在に押さえ込みコネクタ取付部に案内保持するアール状ガイドを回動自在に枢支すると共に、コネクタを着脱自在に挿入するコネクタソケットを介してコネクタ取付部に配備することを特徴とする光ケーブル接続用クロージャにおける成端盤

【請求項２】
請求項１に記載の光ケーブル接続用クロージャにおける成端盤において、コネクタ取付部がコネクタを挿脱自在に内装できる筒状のコネクタソケットを介して取り付けられるものであって、コネクタソケットを嵌入しうる格子状のガイドリブと、把持溝となる該ガイドリブ間に形成された嵌合孔と係止孔に係止しうる係止片をコネクタソケットに対応して設けられていて、該コネクタソケットをコネクタ取付部に着脱自在に配備できる構成とした特徴とする光ケーブル接続用クロージャにおける成端盤。
【請求項３】
請求項１または請求項２に記載の光ケーブル接続用クロージャにける成端盤が、湾曲外側面の配線保持部を持った断面コ字状部材からなり、該湾曲外側面に沿うアール状ガイドを軸受部によって支軸に回動自在に枢支すると共に、上部にセンタートレイ取付部と前記ガイドを閉止固定並びに開放受け止めのための係止ロック部とを設け、下部にコネクタ取付部を備え、前記センタートレイ取付部に固定されたセンタートレイ内に導入される心線から分離した単心線を前記アール状ガイドによって配線保持部を経て下方に沿わせ落とし込み保持し、単心線に接続されたコネクタをコネクタソケットを介して前記コネクタ取付部に着脱自在に備えたことを特徴とする光ケーブル接続用クロージャの成端盤。
【請求項４】
請求項２または請求項３に記載の光ケーブル接続用クロージャにける成端盤において、該成端盤のコネクタ取付部にコネクタソケットを介して取り付けたコネクタを保持するコネクタ固定部材をコネクタ固定ベースによって前記コネクタ取付部に対向配備したことを特徴とする光ケーブル接続用クロージャの成端盤。
【請求項５】
請求項２または請求項３に記載の光ケーブル接続用クロージャにおける成端盤において、前記コネクタ固定部材が、コネクタ挿入凹部と心線挿通溝とを備えた受け部にコネクタ固定ベースに係合する断面逆Ｔ字状の連結部と、ストッパ片とを一体に成形し、該連結部を前記コネクタ固定ベースの把持溝に着脱自在に嵌合したことを特徴とする光ケーブル接続用クロージャの成端盤。
【請求項６】
請求項４または請求項５に記載の光ケーブル接続用クロージャにおける成端盤において、前記コネクタ固定ベースが、一端に把持溝を櫛状に複数形成し、該把持溝にコネクタ固定部材を着脱自在に立設する植込部を備え、他端にトレイ固定ベースに連結する取付部を延設したことを特徴とする光ケーブル接続用クロージャの成端盤。
【請求項７】
請求項５または請求項６に記載の光ケーブル接続用クロージャにおいて、前記スプリッタトレイが、前記成端盤に接続する心線にプラグを設けられると共に、各成端トレイに接続される複数の心線にソケットを設けたスプリッタモジュールが配備されてコネクタ接続を可能にしたスプリッタトレイに構成したことを特徴とする光ケーブル接続用クロージャに用いられる成端盤。

【請求項８】
請求項５、請求項６または請求項７に記載の光ケーブル接続用クロージャにおいて、前記成端トレイが、コネクタ収納部を左右に分けて複数備え、前記スプリッタトレイよりの心線を導入部で固定するドロップ固定部材を必要に応じ設けて、下部伸ばし成端トレイと、ＤＳ／Ｒ・ＴＤ成端トレイと、ドロップ成端トレイとして、それぞれトレイ取付部を介してトレイ固定ベースに複数重ねた状態で、枢支部によって回動自在に枢着したことを特徴とする光ケーブル接続用クロージャに用いられる成端盤。
【請求項９】
請求項７、請求項８または請求項６に記載の光ケーブル接続用クロージャにおいて、前記光ケーブル心線の接続部を収納する接続部収納部と、心線余長を収納する心線余長収納部とを備えてコネクタ接続を可能にした構成の接続用トレイを設けると共に、前記成端トレイを水平状態に保留する櫛歯が多段にあるトレイ収納部にトレイ取付部を摺動自在に配備して成端トレイを前後にスライドできるようにしたことを特徴とする光ケーブル接続用クロージャに用いられる成端盤。
【発明の詳細な説明】
【技術分野】
【０００１】
本発明は、通信ケーブル、特に光ファイバ心線を有する光ファイバケーブル（以下光ケーブル）の架空区間のアクセス区間において、固定配線区間の配線点やケーブル接続点における外被接続並びに架空光ケーブルと、ドロップ光ケーブルの接続のために用いられ、光ケーブルの接続部を保護して、心線余長を収納し、光ケーブルからの引き落し配線および分岐接続配線の際に、他の心線に影響を与えないで単心運用でき、空いている心線はその後のユーザーの加入など必要な単心線として使用して心線使用効率を高め、需要変動にも容易に対応でき、しかも接続配線作業時の取り扱いを容易とし、その作業性を大幅に向上できる光ケーブル接続用クロージャに用いられる成端盤に関するものである。
【背景技術】
【０００２】
従来から、光ケーブルの分岐、引込、接続などを行う場合、クロージャ内においてケーブル心線相互を接続すると共に、該接続部とケーブル心線の余長分とを収納するための心線接続余長収納トレイを備えたクロージャが知られている。
このクロージャは、心線幹線用光ケーブルの主ケーブルから引き出された光ケーブル心線同士或いは分岐用光ケーブルから引き出された心線とを接続する接続部が収納され、さらに接続された心線の余長部分を巻回して保護収納する心線余長収納部とを備えたものとして接続機能専用クロージャ或いはドロップ機能専用クロージャとして用いられている。（特開２００１－４２１５５号）
【０００３】
特許文献１の光ケーブル接続用クロージャは、心線用トレイがテープ心線から分岐した単心ごとに接続部と心線余長とを別個に一括収納できるドロップ用トレイに構成され、該ドロップ用トレイをクロージャ内に設けた取付部に備えたものが開示されている。
【特許文献１】特開２００１－４２１５５号公報
【発明の開示】
【発明が解決しようとする課題】
【０００４】
ところが、光ケーブルを用いた通信網では、光アクセス網の最適な配線形態とすることや、接続配線の作業性の良いこと、さらには光アクセスサービスを迅速かつ安価に提供することが要請されているのに、単心運用作業が難しく光アクセス系設備の効率的な使用や経済的な使用に十分満足するものがなく、特に、ケーブルの高密度、多心化或いは伝送高速度化が進むにつれて容量が不足なりがちで接続分岐に伴う作業や配線整理もやりにくいといった問題が生じている。
また光ケーブルの分岐作業においては、ドロップ光ケーブルを引き落とすためには、使

用不能の心線が生じて不経済となるし、心線を再度本線に戻すことも出来ないなど取り扱いも不便になり、アクセス系設備の効率的かつ経済的な使用ができないし、ドロップ光ケーブルや下部伸ばしテープ心線その他のケーブルへの接続作業時等の配線連絡に心線の引っ張りや屈曲の発生が生じて、接続不良や安全性に欠けさらには振動現象によって伝送特性にも信頼性がないなど問題があった。

【０００５】

本発明は、これら従来の事情に鑑みてなされたものであり、光ケーブル単心線を使用し、該光ケーブルからの引き落し配線および分岐接続配線の際に、他の心線に影響を与えないで単心運用でき、空いている心線は、その後のユーザーの加入などの必要な単心線として用いて心線使用効率を高め、心線接続・収納はモジュール化をはたしたコネクタ接続可能の構成として接続作業や心線収納作業、さらには接続状況の点検補修などの保守作業を含め施工性を大幅に向上させるほか、単心に分離した心線を容易に保護することができて、光ケーブルの有効利用が可能で、心線の下部延ばしや、架空ループ配線にも対応でき、しかも一旦分岐した心線を再度本線に戻すこともできるなど光アクセスサービスを迅速で安価に提供できるし、引き落とし配線および分岐接続配線とそのコネクタ接続部とを収納するための機能が異なるトレイを機能要求に対して必要となる各トレイを簡単に増設追加増設、撤去でき取扱い簡便な架空または地上載置用の光ケーブル接続用クロージャにおける成端盤とすることを目的とするものである。

【課題を解決するための手段】

【０００６】

上述の課題を解決するために、この発明は光ケーブル心線の接続部となるコネクタを収納するコネクタ収納部と、心線余長を収納する心線余長収納部とを備えてコネクタ接続を可能にした構成の成端トレイおよび／またはスプリッタトレイをクロージャ本体内に内装する光ケーブル接続用クロージャに用いられる成端盤は、成端トレイおよび／またはスプリッタトレイの各トレイに接続される心線に設けたコネクタを複数着脱自在に取り付けられるコネクタ取付部のある成端盤とし、該成端盤に導入される単心線即ち、主ケーブルから引き落とされる単心線またはテープ心線を外側面に湾曲して沿わせる配線保持部を形成し、該配線保持部上の単心線を接離自在に押さえ込みコネクタ取付部に案内保持するアール状ガイドを回動自在に枢支すると共に、コネクタを着脱自在に挿入するコネクタソケットを介してコネクタ取付部に配備したものである。

【０００７】

この発明は、成端盤のコネクタ取付部がコネクタを挿脱自在に内装できる筒状のコネクタソケットを介して取り付けられるものであって、コネクタソケットを嵌入しうる格子状のガイドリブと、把持溝となる該ガイドリブ間に形成された嵌合孔と係止孔に係止しうる係止片をコネクタソケットに対応して設けられていて、該コネクタソケットをコネクタ取付部に着脱自在に安全に配備できる構成としたことで、光ケーブルの単心線を使用して光ケーブルの心線接続、収納の作業さらには、接続状況の点検補修などの保守作業を含め施工性を著しく簡便化でき、引き落し配線および分岐接続配線の保護と信頼性を大幅に向上する。

【０００８】

また、この光ケーブル接続用クロージャの成端盤においては、心線から分離した単心線を前記アール状ガイドによって配線保持部を経て下方に沿わせ落とし込み保持し、単心線にキャリアチェンジなどにより他機能のトレイに切替え必要とした場合、コネクタ接続を用いることにより、従来の融着接続およびメカニカルスプライス接続時に生じた心線切り縮み心線余長処理作業をなくして、より安全で確実な接続施工が行え、作業の簡便化と信頼性の向上を図れる。

【０００９】

さらに、本発明の光ケーブル接続用クロージャの成端盤の特徴は、成端盤のコネクタ取付部にコネクタソケットを介して取り付けたコネクタを保持するコネクタ固定部材をコネクタ固定ベースによって前記コネクタ取付部に対向配備しているものであって、ドロップ

ケーブルの固定化が確実にでき、成端トレイ内での作業をも簡便に行なうことができて作業性を大幅に向上する。

【００１０】

さらに、本発明では成端盤が、湾曲外側面の配線保持部を持った断面コ字状部材からなり、該湾曲外側面に沿うアール状ガイドを軸受部によって支軸に回動自在に枢支すると共に、上部にセンタートレイ取付部と前記ガイドの閉止固定並びに開放受け止めとして用いられる係止ロック部とを設け、下部にコネクタ取付部とを備え、該センタートレイ取付部に固定されたセンタートレイ内に導入される心線から分離した単心線を前記アール状ガイドによって配線保持部を経て下方に沿わせ落とし込み保持し、単心線に接続されたコネクタをコネクタソケットを介して前記コネクタ取付部に着脱自在に備えたことにより、心線の長手方向に複数カ所のコネクタ取付部材を備えることとなって接続失敗を考慮してコネクタ接続部を任意の位置に固定することも容易に可能で、さらにコネクタ脱着時に心線の引っ張りや屈曲の発生を抑制して、ＳＳサービス（専用線／Ｂフレッツ　ベーシック）を要望する加入者へ引き落しするため光ケーブルとドロップケーブルまたは発信ケーブルのＤＳケーブルとのコネクタ接続部および心線余長を収納保護する。

【００１１】

また本発明の成端盤は、コネクタ固定部材が、コネクタ挿入凹部と心線挿通溝とを備えた受け部にコネクタ固定ベースに係合する断面逆Ｔ字状の連結部と、ストッパ片とを一体に成形し、該連結部を前記コネクタ固定ベースの把持溝に着脱自在に嵌合すると共に、、前記コネクタ固定ベースが、一端に把持溝を櫛状に複数形成し、該把持溝にコネクタ固定部材を着脱自在に立設する植込部を備え、他端にトレイ固定ベースに連結する取付部を延設したことで、心線着脱時に他心線への影響をなくすことができ、心線の引っ張りや屈曲の発生を抑制する安全な構成としてある。

【００１２】

また本発明では、コネクタを複数着脱自在に取り付けられるコネクタ取付部のある成端盤を備え、該コネクタに接続され、光ケーブル接続用クロージャ本体に備えられる前記スプリッタトレイ（ＳＰトレイ）が、ＰＯＮサービスを要望する加入者へ引き落すために単心ケーブルとＳＰ入力線およびＳＰ出力線とドロップケーブルまたはＤＳケーブルとのコネクタおよび心線余長ならびにスプリッタモジュール（ＳＰモジュール）を収納保護するものであって、複数のコネクタを備えたＳＰモジュールをトレイ内に取付部によって着脱自在に設けてあり、またコネクタ固定部材を両端部に設けて、左右いずれの側からでもドロップケーブルを引き出せるようにし、しかもＳＰ入力線のコネクタ接続部が左右に振り分けて固定できる構成とすると共に、心線着脱時に他心線への影響をなくす構成となっている。

【００１３】

本発明の成端盤が用いられる光ケーブル接続用クロージャでは、前記スプリッタトレイが、前記成端盤に接続する心線にプラグを設けられると共に、各成端トレイに接続される複数の心線にソケットを設けたスプリッタモジュールが配備されてコネクタ接続を可能にしたスプリッタトレイに構成したことで、前記ドロップ成端トレイ（ＤＳ用トレイ）が、配備される接続トレイ（ＳＳトレイ）或いはスプリッタトレイ（ＳＰトレイ）からの出側心線である単心線とＤＳケーブルとのコネクタ接続部および心線余長を収納保護するものであって、加入者対応によりその都度、増設可能とするコネクタ固定構造でＤＳケーブル側の接続失敗余長吸収構造で、左右コネクタ方向への心線振り分けできるようにし、ＤＳ心線側のコネクタを引き抜く際にも心線余長に影響を与えない安全な構成としてある。

そして該ドロップ成端トレイが、枢支部のヒンジ部によって回動自在で、着脱自在にトレイ固定ベースに設けて、各心線の接続回数により生ずる心線余長差を吸収する心線余長収納部を形成し、さらにコネクタ脱着時に心線の引っ張りや屈曲の発生を抑制するようになっている。

【００１４】

前記成端トレイとしては、コネクタ収納部を左右に分けて複数備え、前記スプリッタト

レイよりの心線を導入部で固定するドロップ固定部材を必要に応じ設けて、下部伸ばし成端トレイと、ＤＳ／Ｒ・ＴＤ成端トレイと、ドロップ成端トレイとして、それぞれトレイ取付部を介してトレイ固定ベースに複数重ねた状態で枢支部によって回動自在に枢着したことにより、これら成端トレイで、テープ心線ケーブルルートにクロージャを設置して単心運用するためにクロージャ中心点で切断したテープ心線と割れ入れ心線との接続部と心線余長との収納部を形成したトレイ、例えば片側最大８接続分の固定が可能で、主ケーブル側テープ心線余長をトレイ内に収納でき、上部側或いは、下部側に配備して使用するため左右対称形状の構造で、さらに４心テープ分の出口を個別ルートに分割することで識別容易なトレイとすることもできる。

さらに、前記成端トレイを水平状態に保留する櫛歯が多段にあるトレイ収納部にトレイ取付部を摺動自在に配備してスプリッタトレイおよび成端トレイを前後にスライドできるようにしたことで、各トレイ内での接続作業がし易い位置に変移させて行うことができ、且つ回動自在のトレイであるため重ねられた各トレイの重合面の開放も容易で、点検、補修作業の簡便化が図れる。

【００１５】

なお、光ケーブル接続用クロージャでは、光ケーブル心線の接続部並びに接続余長部分を保護収納する機能の異なる成端トレイをトレイ固定ベースに配備されているものであって、各トレイを係止片と係止受部とからなる係止部によって固定維持できる構成とし、またヒンジ部によって回動自在で、かつ着脱自在にトレイ取付部に複数設けると共に、クロジャー本体内に設けたフレームに固定して、且つ前記スプリッタトレイ及び前記ドロップ成端トレイを複数重ねた状態で摺動可能に配備したものを用い、各トレイを位置変換して配線処理でき、しかも光需要に際して任意のクロージャにて本線から必要な単心線のみを引き落としたり、本線に戻したりすることが容易にできるようにするのがよい。

すなわち、多心光ファイバテープ心線から光ファイバ単心線に分離して１心線のみ又はそれ以上を選んで引き落しケーブルに接続して、他は引き通し光ファイバ単心線として下部に送り込めるように保有しておくことが可能となる。また接続作業に必要な余長心線は、任意のドロップ用トレイを開いて、或いは取り出したりして接続部と共に収納しておくことができる。

そして、空いている心線はその後のユーザーの加入など必要な単心線として使用することができ、そのほか他の心線の接続作業や接続状況の点検、補修、確認、調整など作業をも統合してきわめて容易に行うことができる。

【００１６】

また、前記ドロップ成端トレイおよびスプリッタトレイは、多段で変位可能に配備していて、所定位置で回動自在に変換でき、接続単位で複層化したもので、心線接続部は固定しないし、心線余長も曲率半径を確保した上で取り回し収納できるので、心線余長の吸収に自由度を持たせて納められ、伝送特性に悪影響を及ぼすことがない形態で用いられる。

【発明の効果】

【００１７】

本発明は、コネクタ接続を可能にした構成の成端トレイおよび／またはスプリッタトレイをクロージャ本体内に内装する光ケーブル接続用クロージャに用いられ成端盤が、前記成端トレイおよび／またはスプリッタトレイの各トレイに接続される心線に設けたコネクタを複数着脱自在に取り付けられるコネクタ取付部のある成端盤とし、該成端盤に導入される単心線を外側面に湾曲して沿わせる配線保持部を形成し、該配線保持部上の心線を接離自在に押さえ込みコネクタ取付部に案内保持するアール状ガイドを回動自在に枢支すると共に、コネクタを着脱自在に挿入するコネクタソケットを介してコネクタ取付部に配備した構成としたことにより、光ケーブルからの引き落し配線および分岐接続配線の際に、他の心線に影響を与えないで単心運用でき、空いている心線はその後のユーザーの加入になどの必要な単心線として用いて心線使用効率を高め、心線接続・収納はモジュール化し、コネクタ接続可能の構成として接続作業や心線収納作業、さらには接続状況の点検補修などの保守作業を含め施工性を大幅に向上させるほか、単心に分離した心線を保護するこ

とができて、光ケーブルの有効利用が可能で、心線の下部延ばしや、架空ループ配線にも対応でき、しかも一旦分岐した心線を再度本線に戻すこともできるなど光アクセスサービスを迅速で安価に提供できるし、引き落し配線および分岐接続配線とそのコネクタ接続部とを収納するための機能が異なるトレイをも設けることも可能で、機能要求に対して必要となる各トレイを簡単に増設追加増設、撤去でき心線接続作業が著しく簡易、良好でケーブルの切り替え配線処理も楽にできるので、取扱いの簡便化が図れる。

【００１８】

本発明で用いられる成端盤では、各トレイを切り替え接続する心線のコネクタ取付部が、コネクタソケットを嵌入しうる格子状のガイドリブと、把持溝となる該ガイドリブ間に形成された嵌合孔と係止孔に係止しうる係止片をコネクタソケットに対応して設けられていて、該コネクタソケットをコネクタ取付部に着脱自在に安全に配備できる構成としたことで、光ケーブルの単心線を使用でき、光ケーブルからの引き落し配線および分岐接続配線の際に、他の心線に影響を与えないで単心運用でき、空いている心線は、その後のユーザーの加入になどの必要な単心線として用いて心線使用効率を高め、心線接続・収納はモジュール化を含めコネクタ接続可能の構成として接続作業や心線収納作業、さらには接続状況の点検補修などの保守作業を含め施工性を大幅に向上させることができる。

【００１９】

さらに、光ケーブル接続用クロージャに用いられる本発明の成端盤は、湾曲外側面の配線保持部を持った断面コ字状部材からなり、該湾曲外側面に沿うアール状ガイドを軸受部によって支軸に回動自在に枢支すると共に、上部にセンタートレイ取付部と、前記ガイドを閉止固定並びに開放受け止めするため係止ロック部とを設け、下部にコネクタ取付部を備え、前記センタートレイ取付部に固定されたセンタートレイ内に導入される心線から分離した単心線を前記アール状ガイドによって配線保持部を経て下方に沿わせ落とし込み保持し、単心線に接続されたコネクタをコネクタソケットを介して前記コネクタ取付部に着脱自在に備えたことにより、コネクタ脱着時に心線の引っ張りや屈曲の発生を抑制でき単心分離作業時での心線も見やすく配線作業を容易で、迅速に行なうことができ、また単心線を安全に保護することができるし、心線の接続失敗時に短くなった心線も容易に取り付けられ、心線の引き落しや切替えができるので、心線接続作業、心線収納作業の簡素化に役立ち、優れた単心運用ができる。

【００２０】

この光ケーブル接続用クロージャの成端盤は、そのコネクタ取付部が、コネクタを挿脱自在に内装できるコネクタソケットを嵌入しうる格子状のガイドリブと、該ガイドリブ間に形成された嵌合孔と係止孔に係止しうる係止片をコネクタソケットに対応して設けられている構成からなることで、コネクタソケットを着脱自在に配備でき、該コネクタソケット内にコネクタを挿脱自在に内装してコネクタ脱着作業が簡便にできるほか、コネクタの取り付けセット後の安全性が容易に確保でき各トレイへの接続ケーブル或いはＳＳ接続の場合のドロップケーブルの脱落防止にも役立ち心線の引っ張りや屈曲の発生を抑制できて配線保護にも寄与できる。

【００２１】

さらに、コネクタ接続を可能にした構成のスプリッタトレイが、複数のコネクタを備えたスプリッタモジュールをトレイ内に取付部によって着脱自在に設け、さらにコネクタ脱着時に心線の引っ張りや屈曲の発生を抑制するガイドを形成したことにより、スプリッタモジュールが取り外し、取付けでトレイと別個に開放取り扱うことができ接続作業や各トレイの更新並びに増設作業も容易にできる形態で用いられる。

【００２２】

また、本発明によれば、コネクタ接続を可能にした構成の成端トレイが、成端盤を介して接続作業できるので、心線の長手方向に複数カ所のコネクタ収納部に選定して心線を接続するコネクタを備えられて、コネクタ脱着時に心線の引っ張りや屈曲の発生を抑制でき単心分離作業時での心線も見やすく配線作業を容易で、迅速に行なうことができ、また単心線を安全に保護することができるし、心線の接続失敗時に短くなった心線も容易に取り

付けられ、心線の引き落しや切替えができるので、心線接続作業、心線収納作業の簡素化に役立ち、単心運用のための処理、収納作業に優れた機能を発揮できる。

【００２３】

この光ケーブル接続用クロージャの前記成端盤は、そのコネクタ取付部がガイドリブからなる把持溝と、嵌合孔に嵌合凸部との係止構成をコネクタソケットとの接合面に対応して設けられていることで、コネクタ脱着作業が簡便にできるほかコネクタの取り付けセット後の安全性が容易に確保でき各トレイへの接続ケーブル或いはＳＳ接続の場合のドロップケーブルの脱落防止にも役立ち心線の引っ張りや屈曲の発生を抑制できて配線保護にも寄与できる。

【００２４】

この場合、光ケーブル接続用クロージャで用いられる前記スプリッタトレイが、複数のコネクタを備えたスプリッタモジュールをトレイ内の左右両側に選択して着脱自在に設けられるトレイと、さらに心線余長を収納する収納部を有し心線導出部を左右に振り分けて形成したトレイとの上下二層のトレイとをヒンジ部によつて開閉自在に連結した構成とすれば、各トレイにスプリッタモジュールと心線余長とを分離収納できて成端盤からのスプリッタ入力心線をスプリッタモジュールに接続し成端トレイに接続する配線系としての成端盤から経由して各成端トレイへの配線をし易くして整理の簡便化を図ることができ作業性の向上に寄与できる。

【００２５】

なお、前記スプリッタトレイが、前記成端盤に接続する心線にプラグを設けられると共に、各成端トレイに接続される複数の心線にソケットを設けたスプリッタモジュールが配備されてコネクタ接続を可能にしたスプリッタトレイに構成すると、成端盤からのスプリッタ入力心線をスプリッタモジュールに接続し成端トレイに接続する配線系として簡素化され取扱も容易で作業員の接続誤処理をなくし、作業の均一性を図って品質維持をはかれる。

【００２６】

また、本発明の実施例の光ケーブル接続用クロージャで用いられる前記成端トレイは、コネクタ収納部を左右に分けて複数備え、前記スプリッタトレイよりの心線を導入部で固定するドロップ固定部材を必要に応じ設けて、下部伸ばし成端トレイと、ＤＳ／Ｒ・ＴＤ成端トレイと、ドロップ成端トレイとして、それぞれトレイ取付部を介してトレイ固定ベースに複数重ねた状態で、枢支部によって回動自在に枢着すると、トレイ内において心線の接続回数により心線余長差が発生しても、その余長差を吸収する余長収納部があるため取り回し収納できるので、伝送特性に悪影響を及ぼすこともなく、心線余長収納での高信頼性が得られるし、複数に積層されたトレイの切り替えも可能でクロージャとして安全性並びに作業性を大幅に向上することができる。

【００２７】

さらに、用いられる光ケーブル接続用クロージャでは、前記光ケーブル心線の接続部を収納する接続部収納部と、心線余長を収納する心線余長収納部とを備えてコネクタ接続を可能にした構成のスプレッタトレイおよび成端トレイを水平状態に保留する櫛歯が多段にあるトレイ収納部にトレイ取付部を摺動自在に配備して成端トレイを前後にスライドできるようすると、配線接続その他点検、補修処理作業の際に、各トレイ内での接続作業がし易い位置に変移させて行うことができ、且つ回動自在のトレイであるため重ねられたトレイの重合面の開放も容易で、点検、補修作業の簡便化が図れる。

【発明を実施するための最良の形態】

【００２８】

本発明の実施例を図面を用いて説明すると、図１及び図２に示すクロージャ本体１は、ヒンジ部1_1で一体に連接され、開閉自在に構成されたスリーブからなり、光ケーブルＡをシール部材を介して挿入する端面板２が両端に着脱自在に備えてある。そして光ケーブルＡは、前記端面板２を経てクロージャ本体１内に導入、導出され、ケーブルＴＭ把持具３（ケーブルテンションメンバ把持具）によって把持されていて、光ケーブルＡの主心

線ａ例えば主ケーブルから引き落とされる単心線またはテープ心線から分離された単心線は、主心線ａの接続部となるコネクタＣを複数配備できる成端盤１１を経由して、さらにスプリッタモジュールＢを介して接続されるテープ心線ｂと、ＤＳ／Ｒ・ＴＤケーブルｃ及びドロップケーブルｄ，d_1　と接続されてそれぞれコネクタ接続を可能にした構成にし、これら各接続部のコネクタＣと、余長心線部とを整理する成端トレイ４，５，６とスプリッタトレイ７とが複数配備されている。（図９）

このように、光ケーブルＡの心線の接続部となるコネクタＣを備えてコネクタ接続を可能にした構成の成端トレイ４，５，６および／またはスプリッタトレイ７をクロージャ本体１に内装する光ケーブル接続用クロージャでは、前記成端トレイ４，５，６および／またはスプリッタトレイ７の各トレイに接続される心線に設けたコネクタＣを複数着脱自在に取り付けられるコネクタ取付部１４のある成端盤１１を備え、該成端盤１１に導入される単心線を外側面に湾曲して沿わせる配線保持部11_1　を形成し、該配線保持部11_1　上の心線を接離自在に押さえ込みコネクタ取付部１４に案内保持するアール状ガイド１５を回動自在に枢支すると共に、コネクタＣを着脱自在に挿入するコネクタソケット１６を介してコネクタ取付部１４に配備してある。（図２及び図３）

【００２９】

前記成端盤１１としては、ケーブル廻しで保持する内側ガイドと外側ガイドを左右に有し、湾曲外側面を持った配線保持部11_1　が形成された断面コ字状部材からなり、該配線保持部11_1　に沿ってアール状ガイド１５を軸受部15_1　によって支軸15_2　に連結し、該支軸15_2　を中心として回動自在に枢支すると共に、上部にセンタートレイ取付部14_1　と前記ガイドの閉止固定並びに開放受け止めとして用いられる係止ロック部14_2　とを設け、下部にコネクタ取付部１４とを備え、該センタートレイ取付部14_1　に固定されたセンタートレイ８内に導入される心線ａから分離した単心線を前記アール状ガイド１５によって配線保持部11_1　を経て下方に沿わせて落とし込み保持して、単心線に接続されたコネクタＣを筒状のコネクタソケット１６を介して前記コネクタ取付部１４に着脱自在に備えてある。（図３）

この成端盤１１は、前記トレイ固定ベース１０に取り付けられるが、前記クロージャ本体１内の端面板２に臨んで設けられ、導入、導出される光ケーブルＡの心線の接続に便宜よく対応するようになっている。

なお、前記アール状ガイド１５４は、先端に係止部を備えて成端盤１１に着脱自在に係止できるようにし、主心線ａの押さえ込みが確実にできるようにするのがよい。

【００３０】

前記成端盤１１のコネクタ取付部１４は、コネクタＣを挿脱自在に内装できるコネクタ収納ケース１６を嵌入しうる把持溝となる格子状のガイドリブ２４と、該ガイドリブ２４，２４間に形成された嵌合孔２５と係止孔２６に係止しうる係止片１７をコネクタソケット１６に対応して設けられていて、該コネクタソケット１６を着脱自在に配備できる構成とするのがよい。（図４及び図５）

即ち、コネクタＣをコネクタソケット１６に挿脱自在に内装してコネクタ脱着作業が簡便にできるようにするため、取付板に格子状にガイドリブ２４を複数突設し、該ガイドリブ間の取付板に嵌合孔２５を一対設け、該嵌合孔２５に係止しうる係止片１７，17_1　を備えたコネクタソケット１６を着脱自在に配備するか（図４）、またはガイドリブ２４間の取付板に嵌合孔２５と係止孔２６を設け、嵌合孔２５と係止孔２６に係止しうる係止片１７を備えたコネクタソケット１６を着脱自在に配備し（図６）、このコネクタソケット１６内にコネクタＣを挿脱自在に配備すればよい。

【００３１】

また、前記コネクタソケット１６を着脱自在に配備するには、コネクタソケット１６を取付板に沿って把持溝となるガイドリブ２４間にスライドさせつつ嵌入して係止片１７を嵌合孔２５に嵌め込んで、係止片17_1　を先方の嵌合孔２５に圧入するか係止片１７の先端部を係止孔２６に圧入ロックすればよく、さらに該コネクタソケット１６の両外側面にガイド溝２７を形成し前記ガイドリブ２４の凸条に嵌入しスライドさせて固定し、コネ

クタソケット１６の脱落防止に役立たせてある。

さらに、ドロップケーブルｄ，d_1　などの振動対策として、ドロップケーブルを固定するため、前記コネクタソケット１６に挿入したコネクタＣを固定するためコネクタ固定部材２８がコネクタ固定ベース２９に摺動自在に付設されて、成端盤１１のコネクタ取付部１４に対設され、該コネクタ固定部材２８によって、前記コネクタＣの一端を嵌挿保持して成端盤１１に装着されたコネクタＣの取り付けセット後の安全性が容易に確保でき各トレイへ安定配備ができるようになっている。（図２、図７及び図８）

【００３２】

なお、成端トレイとしては、図１０および図１１に示す如き光ケーブルＡの主心線ａの接続部を収納するコネクタ収納部4_1，5_1，6_1　と、心線余長を収納する心線余長収納部4_2，5_2，6_2　とをそれぞれ備えた下部伸ばし成端トレイ４、ＤＳ／Ｒ・ＴＤ成端トレイ５及びドロップ成端トレイ６をトレイ固定ベース１０に複数重ねた状態で、クロージャ本体１内に内装して光ケーブル接続用クロージャとしてあり、さらにスプリッタモジュールＢを収納するスプリッタトレイ７並びにセンタートレイ８と、光ケーブルＡの主心線ａの接続部Ｃのコネクタを複数配備できる成端盤１１とを付設し、必要に応じて主心線ａの接続部を収納する接続部収納部9_1　と心線余長を収納する心線余長収納部9_2　とを備えた接続トレイ９がクロージャ本体１に内装してある。（図１０～図１２）

なお、前記下部伸ばし成端トレイ４及びＤＳ／Ｒ・ＴＤ成端トレイは、図１０ｂのように二層構造に設けてあるが別個に配置して用いることもできる。

【００３３】

前記光ケーブルＡの主心線ａの接続部となるコネクタＣは、着脱自在のコネクタソケットおよびコネクタプラグからなり、該コネクタＣによって成端盤１１とスプリッタトレイ７とがコネクタ接続可能に接続され、さらにスプリッタトレイ７から分離された出力心線a_1　を成端トレイ例えば、下部伸ばし成端トレイ４、ＤＳ／Ｒ・ＴＤ成端トレイ５及びドロップ成端トレイ６とにコネクタ接続可能に接続される。また、ＳＳ接続の場合には成端盤１１から直接にドロップケーブルd_1　として落として用いることもできる。

さらに、前記成端トレイ４，５，６並びにスプリッタトレイ７は、それぞれ複数重ねた状態でトレイ固定ベース１０に設けたトレイ収納ケース１２の摺動自在のトレイ取付部１３に、枢支部によって回動自在に枢着してクロージャ本体１内に内装されて配線処理作業がし易くできるようになっている。（図１３及び図１４）

【００３４】

前記心線ａに接続するコネクタＣは、成端盤１１のコネクタ取付部１４に複数設けてコネクタ接続を可能にした構成としたものをクロジャー本体１の端面板２に近寄せて左右に配備し、また前記スプリッタトレイ７は心線ａを接続するコネクタＣを複数設けたスプリッタモジュールＢが左右に選んで嵌入配備されてコネクタ接続を可能にしたスプリッタトレイ７に構成したものを２段配備すると共に、該スプリッタトレイ７から分離される出力心線a_1　に接続するコネクタＣを複数配備してコネクタ接続を可能にした下部伸ばし成端トレイ４、ＤＳ／Ｒ・ＴＤ成端トレ５及びドロップ成端トレイ６に構成したものを多段に重ねた状態で配備して、そして各成端トレイ４，５，６をそれぞれヒンジ部によってトレイ取付部１３に回動自在に設けてクロージャ本体１内に変位自在に斜設した構成の光ケーブル接続用クロージャとした。例えば、前記スプリッタトレイ７及びドロップ成端トレイ６を含む成端トレイ４，５、６が、前記固定ベース１０に備えられたトレイ取付部１３に回動自在に階段状にずらせた多重状態下で傾斜保持するように配備されている。

なお、振動対策として、ドロップケーブルを固定するため、前記コネクタソケット１６に挿入したコネクタＣを固定するためコネクタ固定部材２８がコネクタ固定ベース２９に摺動自在に付設されて、成端盤１１のコネクタ取付部１４に対設され、該コネクタ固定部材２８によって、前記コネクタＣの一端を嵌挿保持して成端盤１１に装着されたコネクタＣの取り付けセット後の安全性が容易に確保でき各トレイへ安定配備ができるようになっている。（図２）

【００３５】
前記スプリッタトレイ７としては、複数のコネクタを備えたスプリッタモジュールＢをトレイ内の左右両側にあるモジュール取付部７$_1$　内に選択して着脱自在に設けられるもので、さらに心線余長を収納する余長収納部７$_2$　を有し心線導出部を左右に振り分けて形成したトレイとの上下二層のトレイとをヒンジ部７$_4$　によつて開閉自在に連結し係止部７$_5$　で閉止できる構成とし、枢支部７$_3$　で前記トレイ取付部１３に回動自在で着脱自在に設けてある。（図１１）
なお、前記スプリッタトレイ７は、前記成端盤１１に接続する心線ａにプラグを設けられると共に、各成端トレイ４，５，６に接続される複数の心線にソケットを設けたスプリッタモジュールＢが配備されてコネクタ接続を可能にしたスプリッタトレイ７に構成するのがよい。
【００３６】
これら前記成端トレイ４，５，６は、コネクタ収納部４$_1$　，５$_1$　，６$_1$　を左右に分けて複数備え、心線余長を収納する心線余長収納部４$_2$　，５$_2$　，６$_2$　を備えて、前記スプリッタトレイ７よりの心線を導入部で固定する把持具ベース１８または係止片部１８$_1$　を必要に応じ設けて、下部伸ばし成端トレイ４と、ＤＳ／Ｒ・ＴＤ成端トレイ５と、ドロップ成端トレイ６として、それぞれ枢支部４$_3$　，５$_3$　，６$_3$　によってトレイ取付部１３に回動自在に枢着し、各成端トレイを水平状態に保つ櫛歯１８$_2$　が多段にあるトレイ収納ケース１２に複数重ねた状態で配備するのがよく、また、前記トレイ取付部１３をトレイ収納ケース１２に摺動自在に装備して成端トレイ４，５，６とスプリッタトレイ７とを共に一括して前後にスライドできるように構成し、スライドすることでトレイ作業時の領域を確保し、前方に引きだしてからトレイを階段状にずらせた多重状態ドで傾斜保持するようにするのが好適例である。（図１３及び図１４）
このように前記前記トレイ取付部１３をスライドベース１３$_1$　を介してトレイ収納ケース１２に摺動自在に備えれば、成端トレイ４，５，６およびスプリッタトレイ７が、クロージャ本体１のスリーブを拡開した際にスリーブ外側に引き出して開くことができトレイ作業が容易に行うことができる。
【００３７】
さらに、前記成端トレイ４，５．６としては、最大４心収納でき、心線の長手方向に複数カ所のコネクタ取付部材例えば、格子状のリブを突設したコネクタ収納部４$_1$　，５$_1$　，６$_1$　と、心線余長を収納する心線余長収納部４$_2$　，５$_2$　，６$_2$　とをそれぞれ備えたものであって、接続失敗を考慮してコネクタ接続部を任意の位置に固定することが可能で、さらにコネクタ脱着時に心線の引っ張りや屈曲の発生を抑制するストッパ構造の押さえ片を形成し、ＳＳサービス（専用線ＣＢフレッツ　ベーシック）を要望する加入者へ引き落しするため単心ケーブルとドロップケーブルまたは発信ケーブルのＤＳケーブル（心線よってＤＳトレイへ接続）とのコネクタよび心線余長を心線余長収納部４$_2$　，５$_2$　，６$_2$　に保護する。
またドロップ固定部品用の把持具ベース１８または係止片部１８$_1$　をトレイ両端部または片側部に設けて、左右いずれの側からでもドロップケーブルを引き出せるようにし、しかも心線着脱時に他心線への影響をなくすために成端トレイ４，５．６の左右の心線導入口１９を心線毎の個別通路構造として心線の引っ張りや屈曲の発生を抑制する安全な構成としてある。
【００３８】
また光ケーブル接続用クロージャに備えられる前記スプリッタトレイ７は、８分岐スプリッタモジュールトレイとしてあって、ＰＯＮサービスを要望する加入者へ引き落すために単心ケーブルとＳＰ入力線の主心線ａおよびＳＰ出力線の心線ａ$_1$　とドロップケーブルｄまたはＤＳケーブルｃ（心線よってＤＳトレイへ接続）とのコネクタ接続部および心線余長ならびにスプリッタモジュールＢを収納保護するものであって、複数のコネクタＣを備えたコネクタソケットのあるスプリッタモジュールＢをスプリッタトレイ７内にモジュール取付部７$_1$　例えば、周壁リブ或いは爪部とリブとによって着脱自在に設けてあり

、またドロップ成端トレイ６では、把持具固定用の把持具ベース１８をトレイ両端部に設けて、左右いずれの側からでもドロップケーブルｄを引き出せるようにし、しかも各成端トレイ４，５，６はそれぞれＳＰ入力線のコネクタＣが左右に振り分けて固定できるコネクタ収納部4_1，5_1，６を備えた構成とすると共に、心線着脱時に他心線への影響をなくすためにトレイの左右の心線導入口１９を心線毎の個別通路構造として心線の引っ張りや屈曲の発生を抑制するストッパ構造のガイドを形成して安全な構成とした。

【００３９】

さらに、前記成端トレイ４，５，６としては、前記スプリッタトレイ７および／或いは接続トレイ９からの出側心線である心線とＤＳ心線との接続用のコネクタＣを複数設けたコネクタ接続部および心線余長を収納保護するものであって、加入者対応によりその都度、増設可能とするコネクタ固定構造でありＤＳ心線側の接続失敗余長吸収構造で、左右コネクタ方向への心線振り分けできるようにし、ＤＳ心線側のコネクタを引き抜く際に心線余長に影響を与えないようにストッパ構造の係止片部18_1で安全な構成としてある。

【００４０】

そしてこのドロップ成端トレイ６は、枢支部6_3によって回動自在で、切れ目のある軸受部に着脱自在にトレイ取付部１３に設け、各心線の接続回数により生ずる心線余長差を吸収する心線余長収納部6_2を形成し、さらにコネクタ脱着時に心線の引っ張りや屈曲の発生を抑制するストッパ構造のガイドを設けた。

またドロップ把持具固定用の把持具ベース１８をトレイ両端部に設けて、左右いずれの側からでもドロップケーブルｄ，d_1を引き出せるようにし、しかもＳＰ入力線のコネクタ接続部が左右に振り分けて固定できる構成とすると共に、心線着脱時に他心線への影響をなくすためにトレイの左右の心線導入口１９を心線毎の個別通路構造として心線の引っ張りや屈曲の発生を抑制するストッパ構造のガイドを形成して安全な構成とした。（図１０ａ）

【００４１】

なお、テープ心線ケーブルルートにクロージャを設置して単心運用するためにクロージャ中心点で切断したテープ心線と割れ入れ心線との接続部と、心線余長との収納部を形成した下部伸ばし成端トレイ４、例えば図１０ｂ示す如き片側最大４接続分の固定が可能で、コネクタＣを保持できるコネクタ収納部4_1と心線余長を吸収する心線余長収納部心線余長収納部4_2を形成して、左右いずれの側からでもテープ心線並びに割り入れ心線を引き出せるようにし、ＩＮ側或いはＯＵＴ側に振り分けて固定できる構成としてする。なお、心線を導出入する心線導出入部１９には心線押え片からなる係止片部18_1を回動自在に設けて心線を的確に保持するようにしてある。

また、この下部伸ばし成端トレイ４は、テープ心線ケーブルルートにクロージャを設置して単心運用するためにクロージャ中心点で切断したテープ心線と割り入れ心線との接続部と余長心線を収納保護するために用いられるが、主ケーブル側テープ心線余長をトレイ内に収納可能とし上部、下部側にこのトレイを配備して使用可能とするために左右対称形態とし、４心テープ分の出口を個別ルートに分割することで識別容易なものとして用いられ、ＤＳ／Ｒ・ＴＤ成端トレ５をトレイ内に組み込んだ二層形態で用いてあるが、別個形態で用いるのもよい。

【００４２】

各トレイは、合成樹脂により一体成形またはおのおの成形された成形品であり、略長方形状の外形を有し、内面側が同一或いは相似形状に形成されたもので、各トレイをトレイ固定ベース１０に載置或いはトレイ取付部１３にヒンジ部によって装着して前記クロージャ本体１内に複数一括して固定されるものである。

【００４３】

前記接続トレイ９を除きスプリッタトレイ７並びに前記成端トレイ４，５，６は、フレームからなる前記トレイ固定ベース１０に取り付けたトレイ収納ケース１２に多重状態下で水平保持するように配備されているものであって、各成端トレイ４，５，６およびスプリッタトレイ７をそれぞれ枢支部4_3，5_3，6_3，7_3によって切れ目の

ある軸受部に着脱自在で回動自在にトレイ取付部１３に嵌着されている。（図１３及び図１４）

このトレイ取付部１３は、トレイ収納ケース１２に段状にずらせた櫛歯１８$_2$　の先端近くまで移動できるように摺動自在に移動できるように備えて、スライドすることでトレイ作業時の領域を確保し、前方に引きだしてから各トレイを階段状にずらせた多重状態下で開放し傾斜保持するようにするのがよく、収納時には櫛歯１８$_2$　上に各トレイを水平状態に保って固定される。

【００４４】

前記クロージャ本体１のスリーブの両端壁嵌合部に嵌装された端面板２とを備えたクロージャ１の例で説明すると、端面板２にスペーサ（図示せず）を介して、主幹線光ケーブルＡおよび支持線が貫通されてケーブルＴＭ把持具３、支持線把持具でそれぞれ固定され、かつ、該ケーブルがケーブル把持具に接続連結されている。また、前記主幹線光ケーブルＡから導出された主心線ａは、接続トレイ９、スプリッタトレイ７の他に下部伸ばし成端トレイ４若しくは下部伸ばし成端トレイ４とＤＳ／Ｒ・ＤＴトレイ５とを併用した形態およびドロップ成端トレイ６などに処理されて引き落とし用のケーブルとして端面板２から導出されてドロップケーブルｄ，ｄ$_1$　或いはＤＳケーブルｃ、テープ心線ｂとして配線される。

【００４５】

図１の光ケーブル接続用クロージャをテープ心線ケーブルルートに設置し単心運用するためにクロージャ内で光ケーブルＡでのクロージャ配線では、図９に示すようにセンタートレイ８で分離された主心線ａを成端盤１１を経てスプリッタトレイ７並びに下部伸ばし成端トレイ４、ＤＳ／Ｒ・ＴＤ成端トレイ５及びドロップ成端トレイ６に接続されるが、各トレイがコネクタ接続を可能の構成にするのに、端末にコネクタプラグ並びにコネクタソケットのある心線ａ，ａ$_1$　及びにドロップケーブルｄ，ｄ$_1$　、ＤＳケーブルｃによって接続自在の構成として光ケーブルの心線接続、収納がモジュール化した全コネクタ化したものとしてある。

【００４６】

また、前記クロージャ本体１は、ヒンジ部１$_1$　で連続され二つ割りにできるスリーブによって構成とし、開拡するスリーブの開放状態を調節できるスリーブ開放保持具３０例えば、図２の如きリング３１及びフック３２の係止部を端末に有する連結機構を介して連継できてクロージャ本体１を締めつけクロージャの内部密封性を維持できるようにするのがよい。この場合、スリーブ開放保持具３０を用いれば作業時にスリーブを外すことなく作業側の開放状態を維持して、その開き具合も連続的に調整可能であり、作業側に障害となる部材をなくして取扱易い形態で用いられるようにするのもよい。

【００４７】

更にクロージャ本体１の両端面に備えられる端面板２にはケーブルシールアダプタを着脱自在に装着して用いるのがよい。このクロージャ本体１に備えられる端面板２は、光ケーブルＡを挿入するケーブル挿通路２１のある延長側壁部２$_1$　を設け、各種ケーブルを挿入するケーブル挿通路２２のある部分とを二つ割りで開閉自在のケーブルアダプタ２０で構成し、該ケーブルアダプタ２０を挟持枠片２３によって着脱自在に装着してクロージャ本体１に組み込まれる。（図１５）　該ケーブルシールアダプタ２０は、クロージャに収納したケーブル際の防水機能の端面シールに装着使用し、各種ケーブルを挿入するスリットとシール片とのある心線挿通路を複数設けもよく、また任意のコネクタ付きケーブルを着脱可能とした構造や、各ケーブル導入口に薄膜を付設したスリットで防水構造に構成したものを用いて安全性を図ったものを用いるのがよい。

前記クロージャ本体１に備えられる端面板２が、各種ケーブルを挿入するケーブル挿通路のある延長側壁部を設けたケーブルアダプタを着脱自在に装着したことで、作業時に前記クロージャ本体にスリーブを外すことなく開拡するスリーブの開放状態を調節できるスリーブ開放保持具を配備でき、作業側の開放状態を維持し開き具合をも連続的に可変調節可能のバンドタイプのスリーブ開放保持具を付設することもできるし、また、前記クロー

ジャ本体に備えられる端面板に延長側壁部を設けたことで、主ケーブルやドロップケーブル等の各種ケーブルを仕分けて挿入してクロージャに収容したケーブル際の防水機能のある端面シールとして用い、ドロップケーブルおよびＤＳケーブルの防水を安全に図ることができるし、各種ケーブルを挿入するケーブル挿通路のある二つ割りで開閉自在のケーブルアダプタを挟持枠片によって着脱自在に装着したことにより、主ケーブルやドロップケーブル等の各種ケーブルを仕分けて挿入してクロージャに収容したケーブル際の防水機能のある端面シールとして用い、ドロップケーブルおよびＤＳケーブルの防水を図って安全性を高め分離配線の取扱を良好にすることができる。

【００４８】

さらに、前記スプリッタトレイ７およびドロップ成端トレイ６を含む成端トレイ４，５，６をそれぞれ回動自在に取り付けるためのトレイ取付部１３は、前記トレイ固定ベース１０に配備されるが、各トレイに設ける枢支部或いはヒンジ部のピン軸が嵌入される軸受部は、例えば外方に開口するガイド溝を形成し、該ガイド溝から前記ピン軸に形成した断面狭巾部で挿脱できるようにして、トレイ取付部１３に着脱自在に配備されるピン軸の断面巾広部で係止支持されるし、開口部において断面狭巾部の所定位置で、ピン軸が外れ或いは挿入できるようにするのがよい。

【００４９】

なお、複数の前記成端トレイ４，５，６やスプリッタトレイ７をトレイ取付部１３に着脱自在にするには、単独または前後方向に交互に逆に段積み装着した積層収納したトレイとして用いてもよい。この場合、トレイ本体に突設されたピン軸のある枢支部に係合する軸受部または取付アーム部は、トレイ取付部の両側対称位置に備えればよく、該トレイをクロージャ本体１の形態では、前後いずれの方向でも着脱自在に装着できる構成とすることができ、さらにクロージャ本体１内での各トレイをスライダによって移動位置させて心線接続作業が簡便にできるようにすることもできる。

【００５０】

前記各トレイに形成した心線導出入部には、分離スリットのある心線挿通孔を設けた弾性保持部材（図示せず）を圧入嵌合して心線の支持を確実にしてあり、この弾性保持部材は、心線径或いは心線数に応じた挿通孔あるナイロンチューブや分離スリットのあるスポンジを選んで用いられる。

さらに前記コネクタ収納部、スプリッタ収納部および余長心線収納部は必要に応じガイドリブ及び側壁を選んで区画してもよいし、心線の浮きを阻止する心線押え片或いは係止爪を一体に成形して、余長心線や心線接続部となるコネクタを各トレイ内に確実に保持できるようにするか、またコネクタ収納部或いは心線余長収納部を各トレイ毎に分離整理収納し、ケーブル挿入部からファイバ心線の曲げが極少で心線収納時のねじれをも防止でき、安全かつ高密度収納で高信頼性が得られるようにすることが配慮される。

【００５１】

なお、前記センタートレイ８では、左右両端形成した心線導出入部8_1が必要に応じ格子状リブを突設して心線毎の個別通路構造として心線の引っ張りや屈曲の発生を抑制するストッパ構造のガイドに形成して、さらに単心線ａを抱持して支持するフラップ３３を取り付けるためのフラップ取付孔8_2を複数形成してある。（図３ａ）

このフラップ取付孔8_2には、心線から単心線分離した単心線を結束し得るフラップ３３を取り付け取り外し自在に配備して単心線の保護と心線識別を図るようにしてあるが、各フラップ３３が整列固定されていると任意のフラップ３３に結束さた残単心線によりドロップする場合、他のフラップ３３に結束された単心線に影響がないように着脱ができて安全な作業ができる。

また、前記フラップ３３は、図６に示すように心線嵌挿溝３４をそれぞれ有する二つ折りの抱持片連接したものからなり、突き合わせ面に対向して凹凸からなる係止部３５を設けてあり、連接部から折り曲げて単心線ａを抱持して支持できるように構成し、さらに前記フラップ取付孔8_2に挿入するフランジ付き突起３６が突設され、該突起３６が前記センタートレイ８のフラップ取付孔8_2に挿入され、センタートレイ８の表面にスライ

ドさせて着脱自在に固定でき、フラップ取り外しには、操作片３７でフラップ３３を反対方向に戻して移動すれば外すことができる。

【００５２】

前記スプリッタトレイ７においてスプリッタ処理を行う際には、スプリッタトレイ７とドロップ成端トレイ６内において、光ケーブル心線とスプリッタおよび、スプリッタとドロップケーブルの接続ができるようにしたり、スプリッタ出線の処理までを各トレイで対応するようにすることが望ましい。

いずれにしても、前記スプリッタトレイ７とドロップ成端トレイ６は、多段状のトレイ取付部１３に回動自在に保持され、図１に示すように二つ割りのスリーブからなる円筒状のクロージャ本体１内に組み込まれて用いられ、該クロージャ本体１では、前記配線処理ガイドによりテープ心線とドロップ心線との動きを分離させるのがよい。

【００５３】

前記ドロップケーブルｄ，d_1　のドロップ心線によって引き落とし分岐配線するには、両端に嵌装された端面板２を備えたクロージャ１の例で説明すると、端面板２にスペーサを介して、主幹線ケーブルＡが貫通されてケーブル把持具３で固定され、かつ、該ケーブル把持具３にケーブルのテンションメンバが接続連結されている。この主幹線ケーブルＡから分岐したテープ心線を主心線ａと、引き通し心線とに分岐し、該引き落し心線がコネクタＣの接続部を介し、成端盤１１を経由して前記スプリッタトレイ７とドロップ成端トレイ６とに挿入されて、配線接続されて用いられる。

【００５４】

以上の構成からなるスプリッタトレイ７或いはドロップ成端トレイ６において、テープ心線を単心線に分離したうち選ばれた引き落し心線は成端盤１１を介して、スプリッタトレイ７を経由してドロップ成端トレイ６のいずれか一方の心線導入口１９から入ると、心線通路を通ると共に心線余長は心線余長収納部内に入って処理される。そして出力心線a_1　を用いてコネクタプラグによって各トレイのコネクタソケットに接続されて、ドロップケーブルｄ，d_1　に接続され、必要な引き落し配線が可能となる。

【００５５】

このように、光ファイバケーブルを加入者宅等に引き落とす際に、トレイ各層が開く構造であると共に、単心に分岐するのに心線導入口の一方側から単心線を入れる場合に、心線余長収納部に収納したときは他方の心線導入口側に出すことができる。

なお、心線導入口の一方側から単心線を入れて心線余長収納部に収納する場合、単心線の巻回の仕方によって、両方の心線導入口のいずれの側にも出すこともでき、かつ心線の曲率を小さくすることなく（過負荷を加えることなく）、入口側となった心線導入口と同一の又は異なる心線導入口を出口側として出すことができる。これにより、心線の出入口側を自由に選んで、光ケーブル用クロージャ内での単心線の配線の便宜を図ることができる。

【００５６】

ここで、心線導入口には、ドロップ把持具或いは貫通穴が形成されたスポンジゴム等の弾性変形可能な弾性保持部材が把持溝に押し込む方式で設けられ、心線が保持されてドロップ成端トレイ６内に入り、かつドロップ成端トレイ６外に出る。　このようにドロップ把持具或いは弾性保持部材を心線導入口に介在させれば、心線が心線導入口を通るときに、心線がトレイ本体に擦れることや、或いは引張衝撃等を確実に防止することができる。

【００５７】

そして、前記スプリッタトレイ７や各成端トレイ４，５，６は、クロージャ本体１内のトレイ収納ケース１２にあるトレイ取付部１３に挿入して順次積み重ねられるようにして実装される。この積み重ねには、トレイ収納ケース１２で固定化し、重なり合う心線接続収納トレイ同士をネジ止め等することなく積層連結することができ、高密度収納構造の光ケーブル接続用クロージャとすることができる（図１参照）。

【００５８】

さらに、前記成端盤１１において振動対策としてドロップケーブルｄ，d_1　を固定するため、コネクタ固定部材２８とコネクタ固定ベース２９を配備してあるが、このコネクタ固定部材２８としては、図７のようにコネクタ挿入凹部３８と心線挿通溝３９とを備えた受け部４０にコネクタ固定ベース２９に係合する断面逆Ｔ字状の連結部４１とストッパ片４２とを一体に形成した部品を用い、コネクタＣの一端即ちコネクタソケット端部を前記受け部４０に挿入して支え、コネクタ固定ベース２９の把持溝４３に連結部４１をスライドして押し込み嵌入し、ストッパ片４２でロック固定することで、ドロップケーブルｄ，d_1　を安全に固定化することができる。

また、前記コネクタ固定ベース２９は、図８のように一端に把持溝４３を櫛状に複数形成し、この把持溝４３にコネクタ固定部材２８を着脱自在に立設する植込部４４があって、該把持溝４３に前記コネクタ固定部材２８の断面逆Ｔ字状の連結部４１をスライドして入れられ立設するようになっていて、他端に取付部４４を延設し、この取付部４４でトレイ固定ベース１０に連結して前記成端盤１１にコネクタ固定部材２８を対向配備できるように構成して、コネクタＣのあるドロップケーブルｄ，d_1　を確実に固定維持できるようにするのがよい。（図２及び図８）

【００５９】

これら積み重ねた各成端トレイ４，５，６やスプリッタトレイ７は、それぞれ個別にトレイ取付部１３によって前方に移動可能で、引き出されたトレイの各層を所定の角度で開いて配線でき閉じてから引き戻し固定化できる構造としてあって、各トレイの出し入れや各層を開閉することによってトレイ内に収納された心線に損失などの影響が生ずることなく任意のトレイを取り出すことができる。

【００６０】

また、この前記スプリッタトレイ７や成端トレイ４，５，６を多層トレイとした場合には、Ｎｏ符号の識別番号を順次つけて配線取扱いやすくしてあり、しかも、各トレイは、トレイに内装された際に積層したトレイ間での変形しないように配慮されている。

この場合、多段に積み重ねられたドロップ成端トレイ６の中から所望のドロップ成端トレイ６をトレイ取付部１３から外したり、トレイ取付部１３を移動して引き出せ、各トレイ間の重ね合せ面を開くことができて、トレイの内面側を露出させて収納心線の点検、修理、接続の各作業が簡便に行うことができる。

さらに分離心線使用の場合には、この単心線とドロップケーブルｄ，d_1　とを接続後にトレイ収納するが、ドロップ成端トレイ６に導入されたテープ心線は弾性保持材で固定されＮｏ．１～４までに分岐されそれぞれのトレイに整理配線されてトレイ収納ケース１２に収納され、トレイ固定ベース１０に固定された状態でクロージャ本体１内に保護されて用いられる。

【００６１】

前記弾性保持部材は心線径或いは心線数に応じた挿通孔のあるものを選んで用いられ、さらに接続部収納部及び心線余長収納部は、必要に応じガイドリブ及び側壁を選んで区画してもよいし、心線の浮きを阻止する心線押え片或いは係止爪を一体成形して余長の心線や心線接続部となるコネクタＣをドロップ成端トレイ６内のコネクタ収納部6_1　に確実に把持溝に押し込み方式で保持できるようにし、各スプリッタトレイ７や他の成端トレイ５，４も同様にしてトレイ３毎に心線を分離整理収納し、ケーブル挿入部からファイバ心線の曲げが極少で心線収納時のねじれをも防止でき、安全かつ高密度収納で高信頼性が得られるようにする。

【００６２】

これら実施例で用いられるコネクタ接続を可能にした構成の各トレイ、例えばスプリッタトレイ７或いはドロップ成端トレイ６並びにＤＳ／Ｒ・ＴＤ成端トレイ５および下部伸ばし成端トレイ４などを位置変換して配線処理できるので、光需要に際して任意のクロージャにて本線から必要な単心線のみを引落としたり、本線に戻したりすることが容易にでき、多心光ファイバテープ心線から光ファイバ単心線に分離して１心線のみ又はそれ以上を選んで引き落しケーブルに接続して、他は引き通し光ファイバ単心線として下部に送り

込めるように保有しておくことが可能となる。また接続作業に必要な余長心線は、任意のドロップ心線用トレイを開いて、或いは取り出したりして接続部と共に収納しておけ、空いている心線はその後のユーザーの加入など必要な単心線として安全に用いることができる。

【００６３】

またこの実施例で付設される成端トレイ４，５，６およびスプリッタトレイ７が、前記トレイ収納ケース１２にスライドベースを介して摺動自在に備えられるものであって、各トレイを単心分離作業スペースより移動回避させて、単心分離作業時での導線が見やすく配線作業を容易で迅速に処理することができ、また単心線を安全に保護することができるし、各トレイを自由に取付位置可能で心線の引き落しができるので、架空ループ配線にも容易に対応可能であると共に、一旦分岐した心線を再度本線に戻すこともできるなど、単心の分離、保護、収納作業を大幅に向上できる。

【００６４】

さらにこの実施例によれば、成端トレイ４，５，６およびスプリッタトレイ７が、前記トレイ取付部１３に回動自在に設け、トレイ収納ケース１２に多重状態下で保持するように配備されている構成としたので、クロージャのコンパクト化に寄与し、さらに機能要求に対して必要となる各トレイを簡便に追加増設、撤去できるようにして単心線ごとの接続機能とドロップ機能とを統合して安全に整理することができるし、架空乃至地上ケーブルと、ドロップ光ファイバケーブル或いは集合ドロップ光ファイバケーブルの接続のために有効に用いられ、光ケーブルの接続部を保護して、心線余長を収納し、心線の使用効率を高め単心運用と、作業施工性にも優れた光ケーブル接続用クロージャにすることができる。

【００６５】

さらに、実施形態の成端トレイ４，５，６およびスプリッタトレイ７などのトレイ構成では、コネクタ接続を可能にした構成であって、各トレイでのモジュール化を含めたオールコネクタ化により接続作業や心線収納作業並びに接続状況の点検補修などの保守作業が容易に実施できて施工性に優れ、単心線ごとの接続機能とドロップ機能とを統合して整理収納並びに心線ごとの増減も簡単にで、増設も楽できわめてコンパクトに接続部を収納することができるなど取扱い簡便な光ケーブル接続用クロージャとすることができる。

しかも、複数枚重ねられた各トレイは光ケーブルの伝送特性に悪影響を与えることなく、光ケーブルの接続や切り替え或いは分岐接続作業や再収集作業が容易に実施でき、心線接続作業後に任意の収納トレイを開いて収納されている光ファイバ心線を迅速に取り出すことができ、心線識別も容易で接続部の再調整や修理など簡単に行うことができ、その作業性を大幅に向上することができる。

【００６６】

また各トレイの組み合わせによれば、コネクタ付き心線を用いることによって心線の分岐、引込の際に各成端トレイや接続トレイへの心線導出入の自由度があって作業上、心線接続部へのアクセスが簡便化でき、管理や組立分解作業も容易に行なえ、かつ高密度・高信頼性が得られる。殊に、接続したい空き単心線とドロップ心線とを接続して、残りは現用または空き心線として下部に送り込めるように保有しておくことが可能となるし、また空いている心線はその後のユーザーの加入など必要な単心線として使用することができ、かつ単心に分離した心線の保護とも簡易にすることができ、そのほか他の心線の接続作業や接続状況の点検、補修、確認、調整など作業をも統合してきわめて容易に行うことができる。

【００６７】

さらにまた、この実例ではキャリアチェンジなどにより他機能のトレイに切替え必要とした場合、コネクタ接続およびケーブルシールアダプタを用いることにより、従来の融着接続及びメカニカルスプライス接続時に生じた心線切り縮み、心線余長処理作業をなくし簡便化を図ることができるようにした。

【図面の簡単な説明】

【００６８】
【図１】本発明の実施例の一使用状態を示し、（ａ）はその縦断面図、（ｂ）は横断面図、（ｃ）はＸ－Ｘ線における正面図である。
【図２】図１におけるＹ－Ｙ線における拡大正面図である。
【図３】図１の例で用いれる成端盤を示し、（ａ）はその一部の平面図、（ｂ）はその使用状態の正面図、（ｃ）は（ｂ）図の作用状態を示す正面図である。
【図４】図３（ｂ）におけるコネクタ取付部の一部を拡大して示し、（ａ）はＡ矢視図、（ｂ）はＢ矢視図、（ｃ）はその操作状態を示す平面図、（ｄ）はその操作状態を示す側面図、（ｅ）はその分離作用状態を示す側面図である。
【図５】図３（ｂ）における他の例のコネクタ取付部の一部を拡大して示し、（ａ）はＡ矢視図、（ｂ）はＢ矢視図、（ｃ）はその操作状態を示す平面図、（ｄ）はその分離作用状態を示す側面図である。
【図６】図１の例で用いられるフラップを示し、（ａ）はその展開状態の平面図、（ｂ）はその側面図、（ｃ）はその底面図、（ｃ）はその正面図である。
【図７】図１の例で用いられるコネクタ固定部材を示し、（ａ）はその平面図、（ｂ）その正面図、（ｃ）はその側面図である。
【図８】図１の例で用いられるコネクタ固定ベースを示し、（ａ）はその平面図、（ｂ）はその正面図、（ｃ）はその側面図、（ｄ）はＺ－Ｚ線における縦断面図である。
【図９】図１の例の配線系統説明図である。
【図１０】図１の例で用いられる成端トレイを示し、（ａ）はドロップ成端トレイの平面図、（ｂ）はＤＳ／Ｒ・ＴＤ成端トレイを下部伸ばし成端トレイに組み込んだ状態の平面図である。
【図１１】図１の例で用いられるスプリッタトレイの分離状態を示す平面図である。
【図１２】図１の例で用いられる接続トレイを示し、（ａ）はその平面図、（ｂ）はその側面図、（ｃ）はその正面図である。
【図１３】図１の例で用いられるトレイ収納ケースを示し、（ａ）はその平面図、（ｂ）はその側面図である。
【図１４】図１２の例で用いられるトレイ取付部の作用状態を示し、（ａ）はその移動操作時の正面図、（ｂ）そのその収納操作時の正面図である。
【図１５】図１の例で用いられる端面板を示し、（ａ）はその正面図、（ｂ）はその平面図、（ｃ）はその側面図である。
【符号の説明】
【００６９】
Ａ　光ケーブル
Ｂ　スプリッタルジュール
Ｃ　コネクタ
ａ　主心線
a_1　出力心線
ｂ　テープ心線
ｃ　ＤＳケーブル
ｄ，d_1　ドロップケーブル
１　クロージャ本体
２　端面板
３　ケーブルＴＭ把持具
４，５，６，　成端トレイ

4_1，5_1，6_1，コネクタ収納部
4_2，5_2，6_2　心線余長収納部
4_3，5_3，6_3　枢支部
7　スプリッタトレイ
8　センタートレイ
9　接続トレイ
9　アダプタ
10　トレイ固定ベース
11　成端盤
11_1　配線保持部
12　トレイ収納ケース
13　トレイ取付部
13_1　スライドベース
14　コネクタ取付部
14_1　センタートレイ取付部
14_2　係止ロック部
15　アール状ガイド
15_1　支軸
15_2　軸受部
16　コネクタソケット
17　係止片
18　把持具ベース
19　心線導入口
20　ケーブルアダプタ
21，22　ケーブル挿通路
23　挟持枠片
24　ガイドリブ
25　嵌合孔
26　係止孔
27　ガイド溝
28　コネクタ固定部材
29　コネクタ固定ベース
30　スリーブ開放保持具
31　リング
32　フック
33　フラップ
34　心線嵌挿溝
35　係止部
36　突起
37　操作片
38　コネクタ挿入凹部
39　心線挿通溝
40　受け部
41　連結部
42　ストッパ片
43　把持溝
44　植込部
45　取付部

【図１】

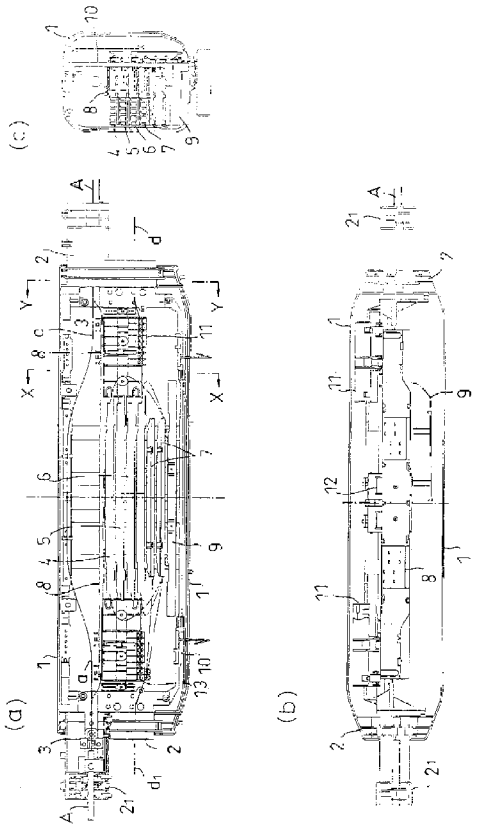

【図２】

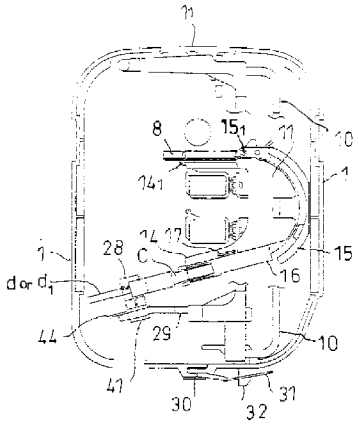

【図３】

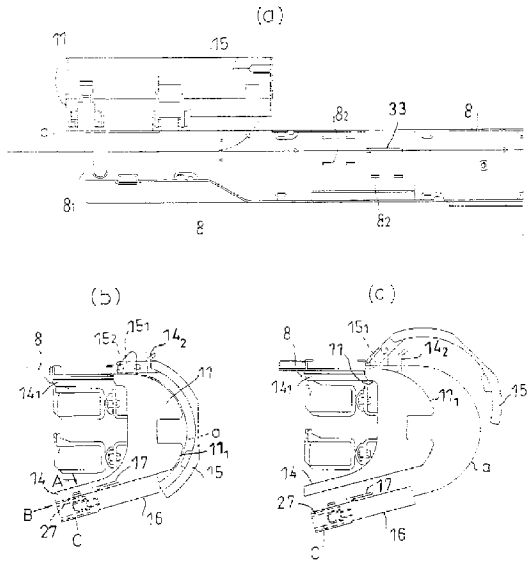

【図４】

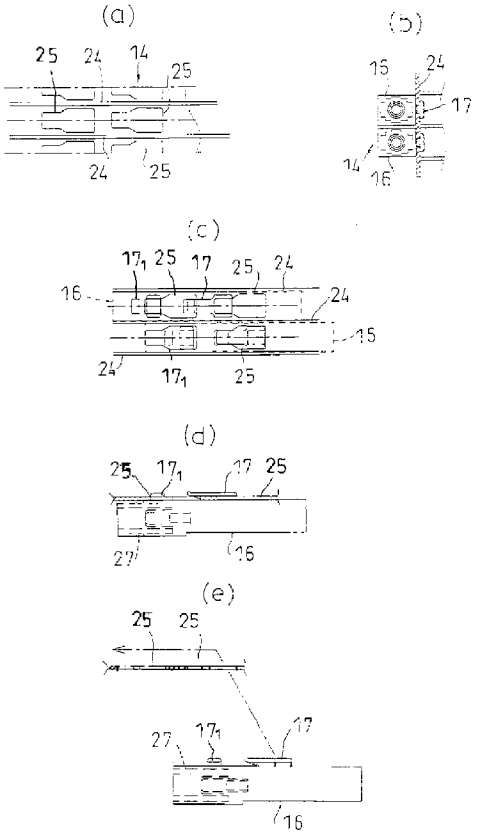

【図５】

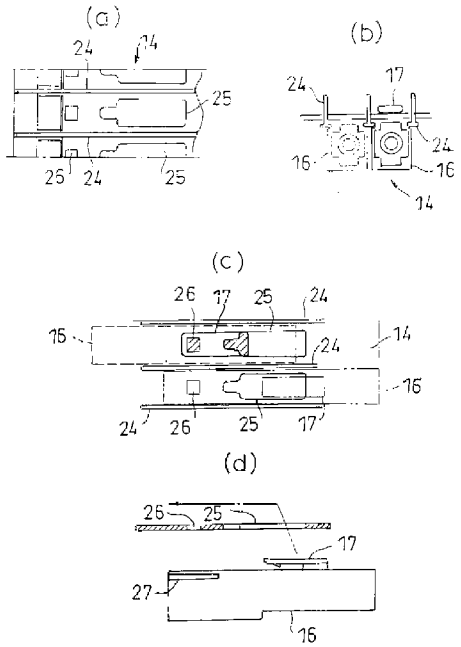
(a)
24
14
25
25
24
25
(b)
17
24
24
16
16
14
(c)
26
17
25
24
16
14
24
16
24
26
25
17
(d)
26
25
17
27
16

【図６】

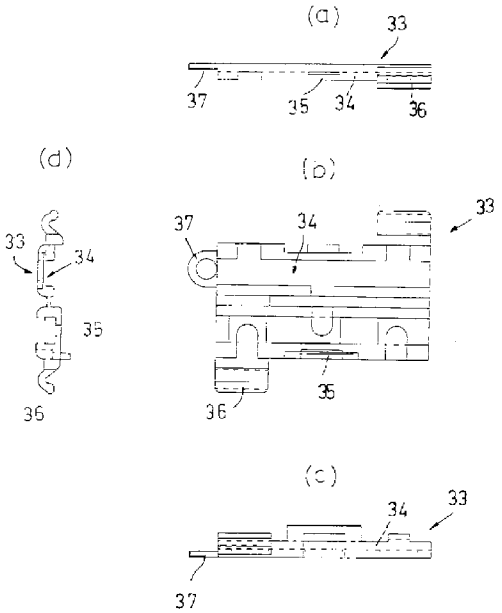
(a)
33
37
35
34
36
(d)
33
34
35
36
(b)
37
34
33
35
36
(c)
34
33
37

【図７】

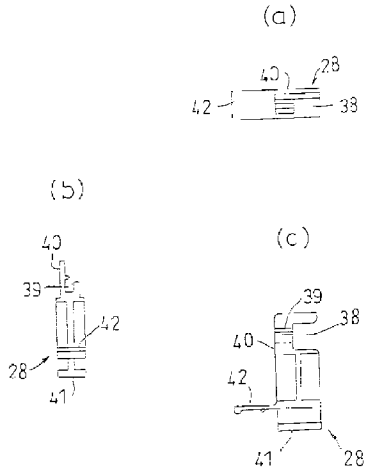
(a)
40
28
42
38
(b)
40
39
42
28
41
(c)
39
38
40
42
41
28

【図８】

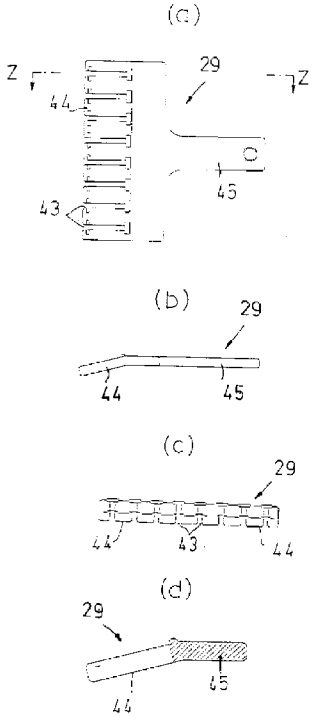
(a)
Z
29
Z
44
45
43
(b)
29
44
45
(c)
29
44
43
44
(d)
29
45
44

【図９】

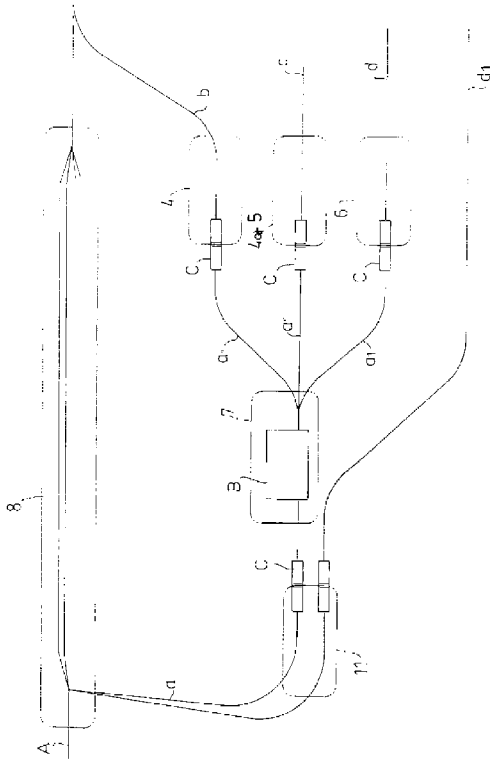

【図１０】

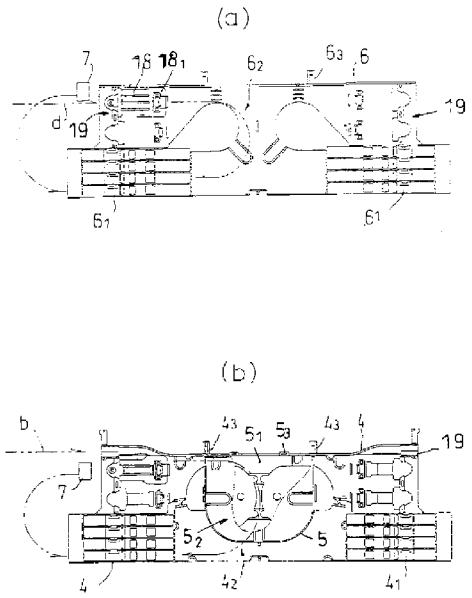

【図１１】

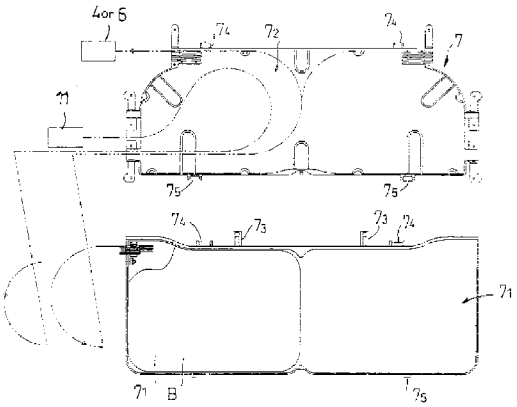

【図１２】

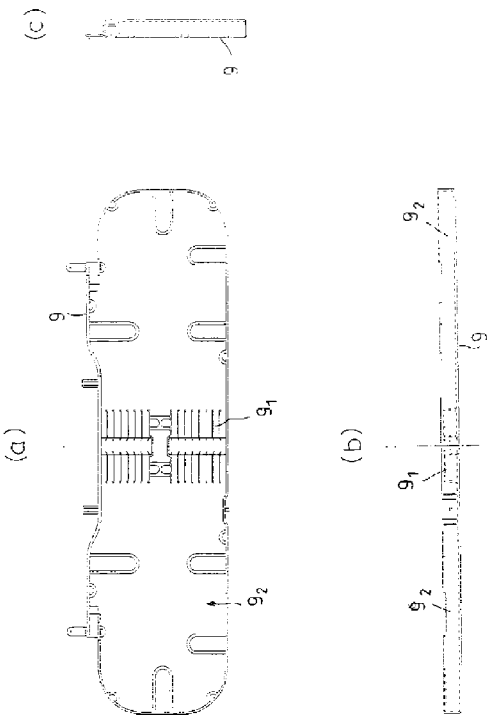

【図１３】

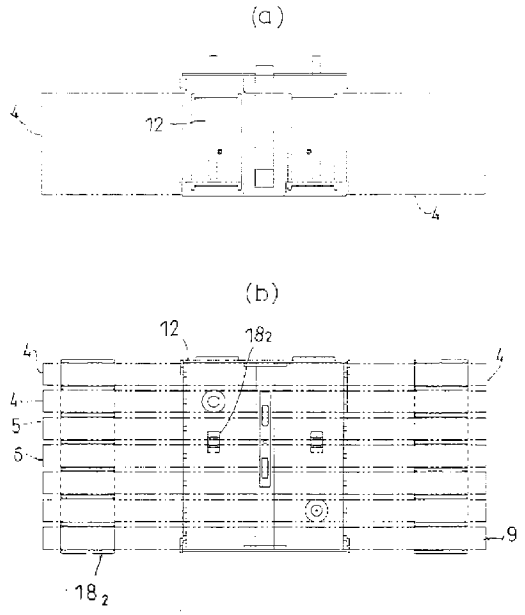
(a)
12
4
4
(b)
12
18₂
4₁
4
4
5
6
9
18₂

【図１４】

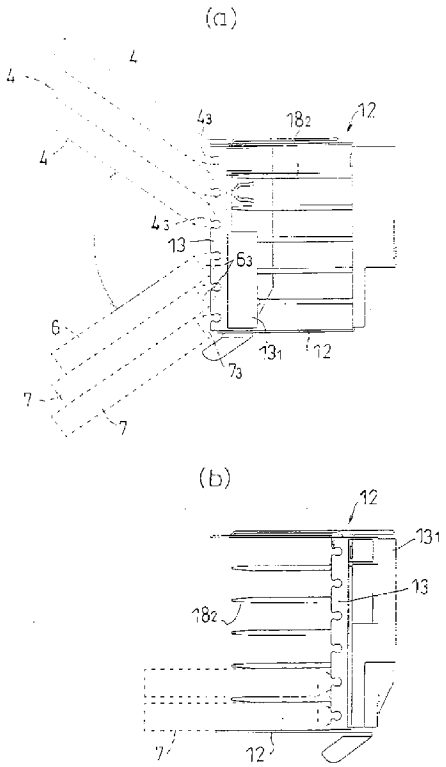
(a)
4
4
4
4₃
18₂
12
4₃
13
6₃
6
13₁
12
7₃
7
7
(b)
12
13₁
13
18₂
7
12

【図１５】

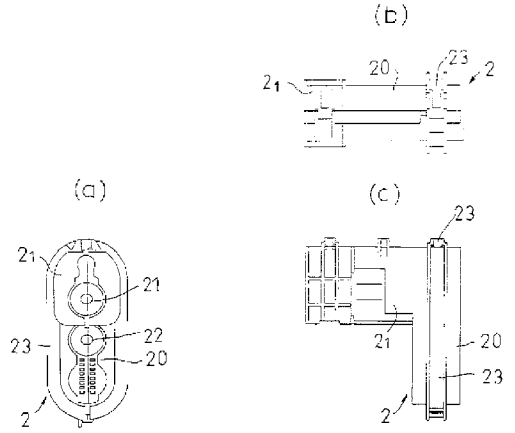
(b)
2₁
20
23
2
(a)
2₁
21
23
22
20
2
(c)
23
21
20
23
2

フロントページの続き

(72)発明者　越山　光治
東京都渋谷区代々木４－３５－３　株式会社ジャパンリーコム内
(72)発明者　鶴田　育也
東京都渋谷区代々木４－３５－３　株式会社ジャパンリーコム内
(72)発明者　大島　義久
東京都渋谷区代々木４－３５－３　株式会社ジャパンリーコム内
(72)発明者　西村　明仁
東京都渋谷区代々木４－３５－３　株式会社ジャパンリーコム内
(72)発明者　岩本　悠也
愛知県小牧市東１丁目２２６番地　日本通信電材株式会社内
(72)発明者　青野　哲明
愛知県小牧市東１丁目２２６番地　日本通信電材株式会社内
(72)発明者　石原　竜也
愛知県小牧市東１丁目２２６番地　日本通信電材株式会社内
(72)発明者　町野　弘二
東京都千代田区大手町二丁目３番１号　日本電信電話株式会社内
(72)発明者　橋口　正弘
東京都千代田区大手町二丁目３番１号　日本電信電話株式会社内
(72)発明者　粟森　雅史
東京都千代田区大手町二丁目３番１号　日本電信電話株式会社内

Ｆターム(参考) 2H038 CA33　CA34　CA37　CA38

Electronic Patent Application Fee Transmittal

Application Number:	15875605
Filing Date:	19-Jan-2018
Title of Invention:	FIBER OPTIC ENCLOSURE WITH INTERNAL CABLE SPOOL
First Named Inventor/Applicant Name:	Scott C. Kowalczyk
Filer:	Julie Katherine Skoge/Kristine Wacek
Attorney Docket Number:	02316.2584US23/ADC003176

Filed as Large Entity

Filing Fees for Utility under 35 USC 111(a)

Description	Fee Code	Quantity	Amount	Sub-Total in USD($)
Basic Filing:				
Pages:				
Claims:				
Miscellaneous-Filing:				
Petition:				
Patent-Appeals-and-Interference:				
Post-Allowance-and-Post-Issuance:				
Extension-of-Time:				

Description	Fee Code	Quantity	Amount	Sub-Total in USD($)
Miscellaneous:				
RCE- 1ST REQUEST	1801	1	1300	1300
		Total in USD ($)		**1300**

Electronic Acknowledgement Receipt

EFS ID:	36784292
Application Number:	15875605
International Application Number:	
Confirmation Number:	4897
Title of Invention:	FIBER OPTIC ENCLOSURE WITH INTERNAL CABLE SPOOL
First Named Inventor/Applicant Name:	Scott C. Kowalczyk
Customer Number:	142510
Filer:	Julie Katherine Skoge/Kristine Wacek
Filer Authorized By:	Julie Katherine Skoge
Attorney Docket Number:	02316.2584US23/ADC003176
Receipt Date:	05-AUG-2019
Filing Date:	19-JAN-2018
Time Stamp:	15:40:30
Application Type:	Utility under 35 USC 111(a)

Payment information:

Submitted with Payment	yes
Payment Type	CARD
Payment was successfully received in RAM	$1300
RAM confirmation Number	E201985F40591509
Deposit Account	132725
Authorized User	Kristine Wacek

The Director of the USPTO is hereby authorized to charge indicated fees and credit any overpayment as follows:

37 CFR 1.16 (National application filing, search, and examination fees)

37 CFR 1.17 (Patent application and reexamination processing fees)

File Listing:

Document Number	Document Description	File Name	File Size(Bytes)/ Message Digest	Multi Part /.zip	Pages (if appl.)
1	Request for Continued Examination (RCE)	2019-08-05-RCE-02316-2584US23.PDF	1349949 dd6cae93b36b322ac33c79500d9b4b6b872e1073	no	3
Warnings:					
Information:					
2	Information Disclosure Statement (IDS) Form (SB08)	2019-08-05-IDS-3-02316-2584US23.PDF	1035095 8bb9b6c681845453d15b1efd4eedbc9f22588abf	no	6
Warnings:					
Information:					
3	Foreign Reference	JP2007-121598A-w-Eng-Abs.PDF	1489070 16fb85fb23ee8289d8416500edf47acc4373efd3	no	26
Warnings:					
Information:					
4	Fee Worksheet (SB06)	fee-info.pdf	30533 46a4f7723a89015ee8519ce21cd7f1ba416fa472	no	2
Warnings:					
Information:					
		Total Files Size (in bytes):	3904647		

This Acknowledgement Receipt evidences receipt on the noted date by the USPTO of the indicated documents, characterized by the applicant, and including page counts, where applicable. It serves as evidence of receipt similar to a Post Card, as described in MPEP 503.

New Applications Under 35 U.S.C. 111
If a new application is being filed and the application includes the necessary components for a filing date (see 37 CFR 1.53(b)-(d) and MPEP 506), a Filing Receipt (37 CFR 1.54) will be issued in due course and the date shown on this Acknowledgement Receipt will establish the filing date of the application.
National Stage of an International Application under 35 U.S.C. 371
If a timely submission to enter the national stage of an international application is compliant with the conditions of 35 U.S.C. 371 and other applicable requirements a Form PCT/DO/EO/903 indicating acceptance of the application as a national stage submission under 35 U.S.C. 371 will be issued in addition to the Filing Receipt, in due course.
New International Application Filed with the USPTO as a Receiving Office
If a new international application is being filed and the international application includes the necessary components for an international filing date (see PCT Article 11 and MPEP 1810), a Notification of the International Application Number and of the International Filing Date (Form PCT/RO/105) will be issued in due course, subject to prescriptions concerning national security, and the date shown on this Acknowledgement Receipt will establish the international filing date of the application.

UNITED STATES PATENT AND TRADEMARK OFFICE

UNITED STATES DEPARTMENT OF COMMERCE
United States Patent and Trademark Office
Address: COMMISSIONER FOR PATENTS
P.O. Box 1450
Alexandria, Virginia 22313-1450
www.uspto.gov

NOTICE OF ALLOWANCE AND FEE(S) DUE

142510 7590 05/13/2019
M&G CommScope
P.O. Box 2903
Minneapolis, MN 55402

EXAMINER
ULLAH, AKM E

ART UNIT	PAPER NUMBER
2874	

DATE MAILED: 05/13/2019

APPLICATION NO.	FILING DATE	FIRST NAMED INVENTOR	ATTORNEY DOCKET NO.	CONFIRMATION NO.
15/875,605	01/19/2018	Scott C. Kowalczyk	02316.2584US23/ ADC003176	4897

TITLE OF INVENTION: FIBER OPTIC ENCLOSURE WITH INTERNAL CABLE SPOOL

APPLN. TYPE	ENTITY STATUS	ISSUE FEE DUE	PUBLICATION FEE DUE	PREV. PAID ISSUE FEE	TOTAL FEE(S) DUE	DATE DUE
nonprovisional	UNDISCOUNTED	$1000	$0.00	$0.00	$1000	08/13/2019

THE APPLICATION IDENTIFIED ABOVE HAS BEEN EXAMINED AND IS ALLOWED FOR ISSUANCE AS A PATENT. PROSECUTION ON THE MERITS IS CLOSED. THIS NOTICE OF ALLOWANCE IS NOT A GRANT OF PATENT RIGHTS. THIS APPLICATION IS SUBJECT TO WITHDRAWAL FROM ISSUE AT THE INITIATIVE OF THE OFFICE OR UPON PETITION BY THE APPLICANT. SEE 37 CFR 1.313 AND MPEP 1308.

THE ISSUE FEE AND PUBLICATION FEE (IF REQUIRED) MUST BE PAID WITHIN THREE MONTHS FROM THE MAILING DATE OF THIS NOTICE OR THIS APPLICATION SHALL BE REGARDED AS ABANDONED. THIS STATUTORY PERIOD CANNOT BE EXTENDED. SEE 35 U.S.C. 151. THE ISSUE FEE DUE INDICATED ABOVE DOES NOT REFLECT A CREDIT FOR ANY PREVIOUSLY PAID ISSUE FEE IN THIS APPLICATION. IF AN ISSUE FEE HAS PREVIOUSLY BEEN PAID IN THIS APPLICATION (AS SHOWN ABOVE), THE RETURN OF PART B OF THIS FORM WILL BE CONSIDERED A REQUEST TO REAPPLY THE PREVIOUSLY PAID ISSUE FEE TOWARD THE ISSUE FEE NOW DUE.

HOW TO REPLY TO THIS NOTICE:

I. Review the ENTITY STATUS shown above. If the ENTITY STATUS is shown as SMALL or MICRO, verify whether entitlement to that entity status still applies.

If the ENTITY STATUS is the same as shown above, pay the TOTAL FEE(S) DUE shown above.

If the ENTITY STATUS is changed from that shown above, on PART B - FEE(S) TRANSMITTAL, complete section number 5 titled "Change in Entity Status (from status indicated above)".

For purposes of this notice, small entity fees are 1/2 the amount of undiscounted fees, and micro entity fees are 1/2 the amount of small entity fees.

II. PART B - FEE(S) TRANSMITTAL, or its equivalent, must be completed and returned to the United States Patent and Trademark Office (USPTO) with your ISSUE FEE and PUBLICATION FEE (if required). If you are charging the fee(s) to your deposit account, section "4b" of Part B - Fee(s) Transmittal should be completed and an extra copy of the form should be submitted. If an equivalent of Part B is filed, a request to reapply a previously paid issue fee must be clearly made, and delays in processing may occur due to the difficulty in recognizing the paper as an equivalent of Part B.

III. All communications regarding this application must give the application number. Please direct all communications prior to issuance to Mail Stop ISSUE FEE unless advised to the contrary.

IMPORTANT REMINDER: Maintenance fees are due in utility patents issuing on applications filed on or after Dec. 12, 1980. It is patentee's responsibility to ensure timely payment of maintenance fees when due. More information is available at www.uspto.gov/PatentMaintenanceFees.

PART B - FEE(S) TRANSMITTAL

Complete and send this form, together with applicable fee(s), by mail or fax, or via EFS-Web.

By mail, send to: Mail Stop ISSUE FEE
Commissioner for Patents
P.O. Box 1450
Alexandria, Virginia 22313-1450

By fax, send to: (571)-273-2885

INSTRUCTIONS: This form should be used for transmitting the ISSUE FEE and PUBLICATION FEE (if required). Blocks 1 through 5 should be completed where appropriate. All further correspondence including the Patent, advance orders and notification of maintenance fees will be mailed to the current correspondence address as indicated unless corrected below or directed otherwise in Block 1, by (a) specifying a new correspondence address; and/or (b) indicating a separate "FEE ADDRESS" for maintenance fee notifications.

CURRENT CORRESPONDENCE ADDRESS (Note: Use Block 1 for any change of address)

142510 7590 05/13/2019
M&G CommScope
P.O. Box 2903
Minneapolis, MN 55402

Note: A certificate of mailing can only be used for domestic mailings of the Fee(s) Transmittal. This certificate cannot be used for any other accompanying papers. Each additional paper, such as an assignment or formal drawing, must have its own certificate of mailing or transmission.

Certificate of Mailing or Transmission

I hereby certify that this Fee(s) Transmittal is being deposited with the United States Postal Service with sufficient postage for first class mail in an envelope addressed to the Mail Stop ISSUE FEE address above, or being transmitted to the USPTO via EFS-Web or by facsimile to (571) 273-2885, on the date below.

(Typed or printed name)

(Signature)

(Date)

APPLICATION NO.	FILING DATE	FIRST NAMED INVENTOR	ATTORNEY DOCKET NO.	CONFIRMATION NO.
15/875,605	01/19/2018	Scott C. Kowalczyk	02316.2584US23/ ADC003176	4897

TITLE OF INVENTION: FIBER OPTIC ENCLOSURE WITH INTERNAL CABLE SPOOL

APPLN. TYPE	ENTITY STATUS	ISSUE FEE DUE	PUBLICATION FEE DUE	PREV. PAID ISSUE FEE	TOTAL FEE(S) DUE	DATE DUE
nonprovisional	UNDISCOUNTED	$1000	$0.00	$0.00	$1000	08/13/2019

EXAMINER	ART UNIT	CLASS-SUBCLASS
ULLAH, AKM E	2874	385-135000

1. Change of correspondence address or indication of "Fee Address" (37 CFR 1.363).

❑ Change of correspondence address (or Change of Correspondence Address form PTO/SB/122) attached.

❑ "Fee Address" indication (or "Fee Address" Indication form PTO/SB/47; Rev 03-09 or more recent) attached. **Use of a Customer Number is required.**

2. For printing on the patent front page, list
(1) The names of up to 3 registered patent attorneys or agents OR, alternatively,
(2) The name of a single firm (having as a member a registered attorney or agent) and the names of up to 2 registered patent attorneys or agents. If no name is listed, no name will be printed.

1_____
2_____
3_____

3. ASSIGNEE NAME AND RESIDENCE DATA TO BE PRINTED ON THE PATENT (print or type)

PLEASE NOTE: Unless an assignee is identified below, no assignee data will appear on the patent. If an assignee is identified below, the document must have been previously recorded, or filed for recordation, as set forth in 37 CFR 3.11 and 37 CFR 3.81(a). Completion of this form is NOT a substitute for filing an assignment.

(A) NAME OF ASSIGNEE (B) RESIDENCE: (CITY and STATE OR COUNTRY)

Please check the appropriate assignee category or categories (will not be printed on the patent) : ❑ Individual ❑ Corporation or other private group entity ❑ Government

4a. Fees submitted: ❑Issue Fee ❑Publication Fee (if required) ❑Advance Order - # of Copies _____

4b. Method of Payment: *(Please first reapply any previously paid fee shown above)*

❑ Electronic Payment via EFS-Web ❑ Enclosed check ❑ Non-electronic payment by credit card (Attach form PTO-2038)

❑ The Director is hereby authorized to charge the required fee(s), any deficiency, or credit any overpayment to Deposit Account No. _____

5. **Change in Entity Status** (from status indicated above)

❑ Applicant certifying micro entity status. See 37 CFR 1.29

❑ Applicant asserting small entity status. See 37 CFR 1.27

❑ Applicant changing to regular undiscounted fee status.

NOTE: Absent a valid certification of Micro Entity Status (see forms PTO/SB/15A and 15B), issue fee payment in the micro entity amount will not be accepted at the risk of application abandonment.
NOTE: If the application was previously under micro entity status, checking this box will be taken to be a notification of loss of entitlement to micro entity status.
NOTE: Checking this box will be taken to be a notification of loss of entitlement to small or micro entity status, as applicable.

NOTE: This form must be signed in accordance with 37 CFR 1.31 and 1.33. See 37 CFR 1.4 for signature requirements and certifications.

Authorized Signature _____ Date _____

Typed or printed name _____ Registration No. _____

UNITED STATES PATENT AND TRADEMARK OFFICE

UNITED STATES DEPARTMENT OF COMMERCE
United States Patent and Trademark Office
Address: COMMISSIONER FOR PATENTS
P.O. Box 1450
Alexandria, Virginia 22313-1450
www.uspto.gov

APPLICATION NO.	FILING DATE	FIRST NAMED INVENTOR	ATTORNEY DOCKET NO.	CONFIRMATION NO.
15/875,605	01/19/2018	Scott C. Kowalczyk	02316.2584US23/ ADC003176	4897

142510 7590 05/13/2019
M&G CommScope
P.O. Box 2903
Minneapolis, MN 55402

EXAMINER
ULLAH, AKM E

ART UNIT	PAPER NUMBER
2874	

DATE MAILED: 05/13/2019

Determination of Patent Term Adjustment under 35 U.S.C. 154 (b)
(Applications filed on or after May 29, 2000)

The Office has discontinued providing a Patent Term Adjustment (PTA) calculation with the Notice of Allowance.

Section 1(h)(2) of the AIA Technical Corrections Act amended 35 U.S.C. 154(b)(3)(B)(i) to eliminate the requirement that the Office provide a patent term adjustment determination with the notice of allowance. See Revisions to Patent Term Adjustment, 78 Fed. Reg. 19416, 19417 (Apr. 1, 2013). Therefore, the Office is no longer providing an initial patent term adjustment determination with the notice of allowance. The Office will continue to provide a patent term adjustment determination with the Issue Notification Letter that is mailed to applicant approximately three weeks prior to the issue date of the patent, and will include the patent term adjustment on the patent. Any request for reconsideration of the patent term adjustment determination (or reinstatement of patent term adjustment) should follow the process outlined in 37 CFR 1.705.

Any questions regarding the Patent Term Extension or Adjustment determination should be directed to the Office of Patent Legal Administration at (571)-272-7702. Questions relating to issue and publication fee payments should be directed to the Customer Service Center of the Office of Patent Publication at 1-(888)-786-0101 or (571)-272-4200.

OMB Clearance and PRA Burden Statement for PTOL-85 Part B

The Paperwork Reduction Act (PRA) of 1995 requires Federal agencies to obtain Office of Management and Budget approval before requesting most types of information from the public. When OMB approves an agency request to collect information from the public, OMB (i) provides a valid OMB Control Number and expiration date for the agency to display on the instrument that will be used to collect the information and (ii) requires the agency to inform the public about the OMB Control Number's legal significance in accordance with 5 CFR 1320.5(b).

The information collected by PTOL-85 Part B is required by 37 CFR 1.311. The information is required to obtain or retain a benefit by the public which is to file (and by the USPTO to process) an application. Confidentiality is governed by 35 U.S.C. 122 and 37 CFR 1.14. This collection is estimated to take 30 minutes to complete, including gathering, preparing, and submitting the completed application form to the USPTO. Time will vary depending upon the individual case. Any comments on the amount of time you require to complete this form and/or suggestions for reducing this burden, should be sent to the Chief Information Officer, U.S. Patent and Trademark Office, U.S. Department of Commerce, P.O. Box 1450, Alexandria, Virginia 22313-1450. DO NOT SEND FEES OR COMPLETED FORMS TO THIS ADDRESS. SEND TO: Commissioner for Patents, P.O. Box 1450, Alexandria, Virginia 22313-1450. Under the Paperwork Reduction Act of 1995, no persons are required to respond to a collection of information unless it displays a valid OMB control number.

Privacy Act Statement

The Privacy Act of 1974 (P.L. 93-579) requires that you be given certain information in connection with your submission of the attached form related to a patent application or patent. Accordingly, pursuant to the requirements of the Act, please be advised that: (1) the general authority for the collection of this information is 35 U.S.C. 2(b)(2); (2) furnishing of the information solicited is voluntary; and (3) the principal purpose for which the information is used by the U.S. Patent and Trademark Office is to process and/or examine your submission related to a patent application or patent. If you do not furnish the requested information, the U.S. Patent and Trademark Office may not be able to process and/or examine your submission, which may result in termination of proceedings or abandonment of the application or expiration of the patent.

The information provided by you in this form will be subject to the following routine uses:

1. The information on this form will be treated confidentially to the extent allowed under the Freedom of Information Act (5 U.S.C. 552) and the Privacy Act (5 U.S.C 552a). Records from this system of records may be disclosed to the Department of Justice to determine whether disclosure of these records is required by the Freedom of Information Act.
2. A record from this system of records may be disclosed, as a routine use, in the course of presenting evidence to a court, magistrate, or administrative tribunal, including disclosures to opposing counsel in the course of settlement negotiations.
3. A record in this system of records may be disclosed, as a routine use, to a Member of Congress submitting a request involving an individual, to whom the record pertains, when the individual has requested assistance from the Member with respect to the subject matter of the record.
4. A record in this system of records may be disclosed, as a routine use, to a contractor of the Agency having need for the information in order to perform a contract. Recipients of information shall be required to comply with the requirements of the Privacy Act of 1974, as amended, pursuant to 5 U.S.C. 552a(m).
5. A record related to an International Application filed under the Patent Cooperation Treaty in this system of records may be disclosed, as a routine use, to the International Bureau of the World Intellectual Property Organization, pursuant to the Patent Cooperation Treaty.
6. A record in this system of records may be disclosed, as a routine use, to another federal agency for purposes of National Security review (35 U.S.C. 181) and for review pursuant to the Atomic Energy Act (42 U.S.C. 218(c)).
7. A record from this system of records may be disclosed, as a routine use, to the Administrator, General Services, or his/her designee, during an inspection of records conducted by GSA as part of that agency's responsibility to recommend improvements in records management practices and programs, under authority of 44 U.S.C. 2904 and 2906. Such disclosure shall be made in accordance with the GSA regulations governing inspection of records for this purpose, and any other relevant (i.e., GSA or Commerce) directive. Such disclosure shall not be used to make determinations about individuals.
8. A record from this system of records may be disclosed, as a routine use, to the public after either publication of the application pursuant to 35 U.S.C. 122(b) or issuance of a patent pursuant to 35 U.S.C. 151. Further, a record may be disclosed, subject to the limitations of 37 CFR 1.14, as a routine use, to the public if the record was filed in an application which became abandoned or in which the proceedings were terminated and which application is referenced by either a published application, an application open to public inspection or an issued patent.
9. A record from this system of records may be disclosed, as a routine use, to a Federal, State, or local law enforcement agency, if the USPTO becomes aware of a violation or potential violation of law or regulation.

IPR2025-01119
Belden EX1023

Notice of Allowability	Application No. 15/875,605	Applicant(s) Kowalczyk et al.	
	Examiner Akm E Ullah	Art Unit 2874	AIA (FITF) Status No

-- The MAILING DATE of this communication appears on the cover sheet with the correspondence address--

All claims being allowable, PROSECUTION ON THE MERITS IS (OR REMAINS) CLOSED in this application. If not included herewith (or previously mailed), a Notice of Allowance (PTOL-85) or other appropriate communication will be mailed in due course. **THIS NOTICE OF ALLOWABILITY IS NOT A GRANT OF PATENT RIGHTS.** This application is subject to withdrawal from issue at the initiative of the Office or upon petition by the applicant. See 37 CFR 1.313 and MPEP 1308.

1. ☑ This communication is responsive to 9/26/2018.
   ☐ A declaration(s)/affidavit(s) under **37 CFR 1.130(b)** was/were filed on _____.

2. ☐ An election was made by the applicant in response to a restriction requirement set forth during the interview on _____; the restriction requirement and election have been incorporated into this action.

3. ☑ The allowed claim(s) is/are 1-24 . As a result of the allowed claim(s), you may be eligible to benefit from the **Patent Prosecution Highway** program at a participating intellectual property office for the corresponding application. For more information, please see **http://www.uspto.gov/patents/init_events/pph/index.jsp** or send an inquiry to **PPHfeedback@uspto.gov.**

4. ☐ Acknowledgment is made of a claim for foreign priority under 35 U.S.C. § 119(a)-(d) or (f).

   Certified copies:

   a) ☐ All b) ☐ Some *c) ☐ None of the:

   1. ☐ Certified copies of the priority documents have been received.
   2. ☐ Certified copies of the priority documents have been received in Application No. _____ .
   3. ☐ Copies of the certified copies of the priority documents have been received in this national stage application from the International Bureau (PCT Rule 17.2(a)).

   * Certified copies not received: _____ .

Applicant has THREE MONTHS FROM THE "MAILING DATE" of this communication to file areply complying with the requirements noted below. Failure to timely comply will result in ABANDONMENT of this application.
THIS THREE-MONTH PERIOD IS NOT EXTENDABLE.

5. ☐ CORRECTED DRAWINGS (as "replacement sheets") must be submitted.
   ☐ including changes required by the attached Examiner's Amendment / Comment or in the Office action of Paper No./Mail Date _____ .

   Identifying indicia such as the application number (see 37 CFR 1.84(c)) should be written on the drawings in the front (not the back) of each sheet. Replacement sheet(s) should be labeled as such in the header according to 37 CFR 1.121(d).

6. ☐ DEPOSIT OF and/or INFORMATION about the deposit of BIOLOGICAL MATERIAL must be submitted. Note the attached Examiner's comment regarding REQUIREMENT FOR THE DEPOSIT OF BIOLOGICAL MATERIAL.

Attachment(s)

1. ☑ Notice of References Cited (PTO-892)
2. ☑ Information Disclosure Statements (PTO/SB/08), Paper No./Mail Date _____.
3. ☐ Examiner's Comment Regarding Requirement for Deposit of Biological Material _____.
4. ☐ Interview Summary (PTO-413), Paper No./Mail Date. _____.
5. ☐ Examiner's Amendment/Comment
6. ☑ Examiner's Statement of Reasons for Allowance
7. ☐ Other _____.

/AKM E ULLAH/
Primary Examiner, Art Unit 2874

Notice of Pre-AIA or AIA Status

The present application is being examined under the pre-AIA first to invent provisions.

Reasons for Allowance

The following is an examiner's statement of reasons for allowance:

None of the references disclose alone or in combination a method of connecting a subscriber to a fiber optic network using a fiber optic enclosure, the fiber optic enclosure including a main housing, a cable spool disposed within an interior of the main housing, an adapter disposed within the interior of the main housing, and a cover that selectively provides and blocks access to the interior of the main housing, the cable spool holding at least a portion of an optical cable that includes an optical fiber extending between a first end and a second end, the first end being terminated at a first optical connector and the second end being terminated at a second optical connector, **the method comprising:**

paying out a portion of the optical cable from the cable spool by rotating the cable spool while the second optical connector rotates in concert with the cable spool; and

opening the cover to provide access to the interior of the main housing; routing a connectorized end of a subscriber cable into the interior of the main housing; plugging the connectorized end of the subscriber cable into the adapter;

and closing the cover to block access to the interior of the main housing after the subscriber cable is plugged into the adapter,

wherein the adapter, the second optical connector, and the connectorized end of the subscriber cable remain disposed within the interior of the main housing when the cover is closed.

Any comments considered necessary by applicant must be submitted no later than the payment of the issue fee and, to avoid processing delays, should preferably accompany the issue fee. Such submissions should be clearly labeled "Comments on Statement of Reasons for Allowance."

Conclusion

Any inquiry concerning this communication or earlier communications from the examiner should be directed to Akm Enayet Ullah whose telephone number is (571)272-2361. The examiner can normally be reached on M-TH: 6AM - 10 PM.

Examiner interviews are available via telephone, in-person, and video conferencing using a USPTO supplied web-based collaboration tool. To schedule an interview, applicant is encouraged to use the USPTO Automated Interview Request (AIR) at http://www.uspto.gov/interviewpractice.

If attempts to reach the examiner by telephone are unsuccessful, the examiner's supervisor, Uyen-Chau Le can be reached on 571-272-2397. The fax phone number for the organization where this application or proceeding is assigned is 571-273-8300.

Information regarding the status of an application may be obtained from the Patent Application Information Retrieval (PAIR) system. Status information for published applications may be obtained from either Private PAIR or Public PAIR. Status information for unpublished applications is available through Private PAIR only. For more information about the PAIR system, see http://pair-direct.uspto.gov. Should you have questions on access to the Private PAIR system, contact the Electronic Business Center (EBC) at 866-217-9197 (toll-free). If you would like assistance from a USPTO Customer Service Representative or access to the automated information system, call 800-786-9199 (IN USA OR CANADA) or 571-272-1000.

/AKM E ULLAH/
Primary Examiner, Art Unit 2874

Notice of References Cited	Application/Control No. 15/875,605	Applicant(s)/Patent Under Reexamination Kowalczyk et al.	
	Examiner Akm E Ullah	Art Unit 2874	Page 1 of 1

U.S. PATENT DOCUMENTS

*		Document Number Country Code-Number-Kind Code	Date MM-YYYY	Name	CPC Classification	US Classification
*	A	US-5124606-A	06-1992	Eisenbeis; Gottfried	H02K17/30	112/277
*	B	US-6195494-B1	02-2001	Abbott; George G.	G02B6/3897	385/134
*	C	US-6427045-B1	07-2002	Matthes; John	G02B6/445	385/134
*	D	US-6427781-B1	08-2002	Buhler; Ronald T.	A01B37/00	172/134
*	E	US-6511009-B1	01-2003	Harrison; Carl G.	B65H75/14	242/378.3
*	F	US-6533205-B1	03-2003	Kles; Gary	B65H54/58	242/362
*	G	US-6745971-B1	06-2004	Renzoni; Toby K.	B65H75/362	242/388.1
*	H	US-7493003-B2	02-2009	Kowalczyk; Scott C.	G02B6/4452	385/135
*	I	US-20030223724-A1	12-2003	Puetz, Curtis Lee	G02B6/4452	385/135
*	J	US-20060045458-A1	03-2006	Sasaki; Koji	G02B6/444	385/135
*	K	US-20060210230-A1	09-2006	Kline; James R.	G02B6/4457	385/135
*	L	US-20070036506-A1	02-2007	Kewitsch; AnthonyS	G02B6/4457	385/135
*	M	US-20090074370-A1	03-2009	Kowalczyk; Scott C.	G02B6/4441	385/135

FOREIGN PATENT DOCUMENTS

*		Document Number Country Code-Number-Kind Code	Date MM-YYYY	Country	Name	CPC Classification
	N					
	O					
	P					
	Q					
	R					
	S					
	T					

NON-PATENT DOCUMENTS

*		Include as applicable: Author, Title Date, Publisher, Edition or Volume, Pertinent Pages)
	U	
	V	
	W	
	X	

*A copy of this reference is not being furnished with this Office action. (See MPEP § 707.05(a).)
Dates in MM-YYYY format are publication dates. Classifications may be US or foreign.

Issue Classification	Application/Control No.	Applicant(s)/Patent Under Reexamination
	15/875,605	Kowalczyk et al.
	Examiner	**Art Unit**
	Akm E Ullah	2874

CPC						
Symbol					**Type**	**Version**
G02B	/	6	/	4457	F	2013-01-01
G02B	/	6	/	4441	I	2013-01-01
G02B	/	6	/	445	I	2013-01-01
G02B	/	6	/	4446	I	2013-01-01
G02B	/	6	/	4471	I	2013-01-01
G02B	/	6	/	3897	I	2013-01-01
G02B	/	6	/	4452	I	2013-01-01
G02B	/	6	/	4453	I	2013-01-01
G02B	/	6	/	4454	I	2013-01-01
G02B	/	6	/	46	I	2013-01-01

CPC Combination Sets								
Symbol					**Type**	**Set**	**Ranking**	**Version**
	/		/					

NONE (Assistant Examiner) (Date)		**Total Claims Allowed:** 24	
/AKM E ULLAH/ Primary Examiner, Art Unit 2874 (Primary Examiner) (Date)	02 May 2019	O.G. Print Claim(s) 1	O.G. Print Figure 3

U.S. Patent and Trademark Office Part of Paper No.: 20190502

Issue Classification	Application/Control No.	Applicant(s)/Patent Under Reexamination
	15/875,605	Kowalczyk et al.
	Examiner	**Art Unit**
	Akm E Ullah	2874

INTERNATIONAL CLASSIFICATION				
CLAIMED				
G02B	/	6	/	46

NON-CLAIMED				
	/		/	

US ORIGINAL CLASSIFICATION	
CLASS	**SUBCLASS**

CROSS REFERENCES(S)						
CLASS	**SUBCLASS (ONE SUBCLASS PER BLOCK)**					

NONE (Assistant Examiner) (Date)		**Total Claims Allowed:** 24	
/AKM E ULLAH/ Primary Examiner, Art Unit 2874 (Primary Examiner) (Date)	02 May 2019	O.G. Print Claim(s) 1	O.G. Print Figure 3

U.S. Patent and Trademark Office Part of Paper No.: 20190502

Issue Classification	Application/Control No.	Applicant(s)/Patent Under Reexamination
	15/875,605	Kowalczyk et al.
	Examiner	**Art Unit**
	Akm E Ullah	2874

☑ Claims renumbered in the same order as presented by applicant ☐ CPA ☐ T.D. ☐ R.1.47

CLAIMS

Final	Original	Final	Original	Final	Original	Final	Original	Final	Original	Final	Original	Final	Original	Final	Original
	1		10		19										
	2		11		20										
	3		12		21										
	4		13		22										
	5		14		23										
	6		15		24										
	7		16												
	8		17												
	9		18												

NONE (Assistant Examiner)	(Date)	**Total Claims Allowed:** 24	
/AKM E ULLAH/ Primary Examiner, Art Unit 2874 (Primary Examiner)	02 May 2019 (Date)	O.G. Print Claim(s) 1	O.G. Print Figure 3

U.S. Patent and Trademark Office

Part of Paper No.: 20190502

Index of Claims	Application/Control No.	Applicant(s)/Patent Under Reexamination
	15/875,605	Kowalczyk et al.
	Examiner	**Art Unit**
	Akm E Ullah	2874

✓	Rejected	-	Cancelled	N	Non-Elected	A	Appeal
=	Allowed	÷	Restricted	I	Interference	O	Objected

CLAIMS

☑ Claims renumbered in the same order as presented by applicant ☐ CPA ☐ T.D. ☐ R.1.47

CLAIM		DATE								
Final	Original	05/02/2019								
	1	=								
	2	=								
	3	=								
	4	=								
	5	=								
	6	=								
	7	=								
	8	=								
	9	=								
	10	=								
	11	=								
	12	=								
	13	=								
	14	=								
	15	=								
	16	=								
	17	=								
	18	=								
	19	=								
	20	=								
	21	=								
	22	=								
	23	=								
	24	=								

Search Notes	Application/Control No.	Applicant(s)/Patent Under Reexamination
	15/875,605	Kowalczyk et al.
	Examiner	**Art Unit**
	Akm E Ullah	2874

CPC - Searched*		
Symbol	**Date**	**Examiner**
G02B 6/46, 445, 4441, 4457, 4446, 4471, 3897, 4452, 4453, 4453	05/02/2019	AU
G02B6/$.cpc.	05/02/2019	AU

CPC Combination Sets - Searched*		
Symbol	**Date**	**Examiner**

US Classification - Searched*			
Class	**Subclass**	**Date**	**Examiner**
395	130 -135	05/02/2019	AU

* See search history printout included with this form or the SEARCH NOTES box below to determine the scope of the search.

Search Notes		
Search Notes	**Date**	**Examiner**
EAST, INVENTOR and ASSIGNEE	05/02/2019	AU

Interference Search			
US Class/CPC Symbol	**US Subclass/CPC Group**	**Date**	**Examiner**
G02B	6/$; text search limited	05/02/2019	AU

/AKM E ULLAH/ Primary Examiner, Art Unit 2874	

EAST Search History

EAST Search History (Prior Art)

Ref #	Hits	Search Query	DBs	Default Operator	Plurals	Time Stamp
L1	2	"15875605"	US-PGPUB; USPAT; FPRS; EPO; JPO; DERWENT; IBM_TDB	OR	ON	2019/05/02 13:00
L2	440376	G02B6/$.cpc.	US-PGPUB; USPAT; FPRS; EPO; JPO; DERWENT; IBM_TDB	OR	ON	2019/05/02 13:02
L3	171	(fiber adj3 optic$4 adj5 network)and(fiber adj2 optic$4 adj3 enclosure)and (cable adj5 spool)and adapter and (cable with spool)	US-PGPUB; USPAT; FPRS; EPO; JPO; DERWENT; IBM_TDB	OR	ON	2019/05/02 13:05
L4	32	(optical adj2 connector)same (rotat$4)same (cable adj5 spool)	US-PGPUB; USPAT; FPRS; EPO; JPO; DERWENT; IBM_TDB	OR	ON	2019/05/02 13:08
L5	11	3 and 4	US-PGPUB; USPAT; FPRS; EPO; JPO; DERWENT; IBM_TDB	OR	ON	2019/05/02 13:08
L6	0	3 and @pd<"20070807"	US-PGPUB; USPAT; FPRS; EPO; JPO; DERWENT; IBM_TDB	OR	ON	2019/05/02 13:11
L7	1	4 and @pd<"20070807"	US-PGPUB; USPAT; FPRS; EPO; JPO; DERWENT; IBM_TDB	OR	ON	2019/05/02 13:12
L8	226672	2 and @pd<"20070807"	US-PGPUB; USPAT; FPRS; EPO; JPO; DERWENT; IBM_TDB	OR	ON	2019/05/02 13:19
L9	0	3 and 4 and 8	US-PGPUB; USPAT; FPRS; EPO; JPO; DERWENT; IBM_TDB	OR	ON	2019/05/02 13:20
L10	0	3 and 8	US-PGPUB; USPAT; FPRS; EPO; JPO; DERWENT; IBM_TDB	OR	ON	2019/05/02 13:20

L11	182	8 and (cable adj3 spool) and (rotat$4)	US-PGPUB; USPAT; FPRS; EPO; JPO; DERWENT; IBM_TDB	OR	ON	2019/05/02 13:21
L12	115	8 and (cable adj3 spool) and (rotat$4)and (connector)	US-PGPUB; USPAT; FPRS; EPO; JPO; DERWENT; IBM_TDB	OR	ON	2019/05/02 13:21
L13	0	(dirst adj2 optic adj2 connector) and (second adj2 optic adj2 connector)	US-PGPUB; USPAT; FPRS; EPO; JPO; DERWENT; IBM_TDB	OR	ON	2019/05/02 13:22
L14	647	(first adj2 optic adj2 connector) and (second adj2 optic adj2 connector)	US-PGPUB; USPAT; FPRS; EPO; JPO; DERWENT; IBM_TDB	OR	ON	2019/05/02 13:22
L15	3	12 and 14	US-PGPUB; USPAT; FPRS; EPO; JPO; DERWENT; IBM_TDB	OR	ON	2019/05/02 13:23

5/2/2019 1:34:21 PM
C:\Users\aullah\Documents\EAST\Workspaces\16028263.wsp

S/N NEW FILING PATENT

IN THE UNITED STATES PATENT AND TRADEMARK OFFICE

Inventor:	KOWALCZYK ET AL.	Examiner:	UNKNOWN
Serial No.:	HEREWITH	Group Art Unit:	UNKNOWN
Filed:	NEW FILING	Docket No.:	02316.2584US23
Title:	FIBER OPTIC ENCLOSURE WITH INTERNAL CABLE SPOOL		

Filed via EFS-Web

INFORMATION DISCLOSURE STATEMENT (37 C.F.R. § 1.97(b))

Commissioner for Patents
P.O. Box 1450
Alexandria, Virginia 22313-1450

142510
PATENT TRADEMARK OFFICE

Attention: Commissioner for Patents

With regard to the above-identified application, the items of information listed on the enclosed Form 1449 are brought to the attention of the Examiner.

This statement should be considered because it is submitted within three months of the filing date of the above-identified application, which is not an application under 37 C.F.R. § 1.53(d). Accordingly, no fee is due for consideration of the items listed on the enclosed Form 1449.

In accordance with 37 C.F.R. §1.98(a)(2) and §1.98(d), a copy of each foreign patent and/or a copy of each publication, other than U.S. patents and U.S. patent application publications, has been provided only for those items listed on the enclosed Form 1449 that have not previously been cited by or submitted to the U.S. Patent and Trademark Office in parent applications, U.S. Serial No. 15/470,311 filed on March 27, 2017; U.S. Serial No. 14/979,870 filed on December 28, 2015; U.S. Serial No. 14/539,459 filed on November 12, 2014; U.S. Serial No. 14/132,691 filed on December 18, 2013; U.S. Serial No. 13/924,191 filed on June 21, 2013; U.S. Serial No. 13/479,015 filed on May 23, 2012; U.S. Serial No. 13/032,337 filed on February 22, 2011; U.S. Serial No. 12/793,556 filed on June 3, 2010; and U.S. Serial No. 12/182,705 filed on July 30, 2008.

No representation is made that a reference is "prior art" within the meaning of 35 U.S.C. §§ 102 and 103 and Applicants reserve the right, pursuant to 37 C.F.R. § 1.131 or otherwise, to establish that the reference(s) are not "prior art."

Consideration of the items listed is respectfully requested. Pursuant to the provisions of M.P.E.P. 609, it is requested that the Examiner return a copy of the attached Form 1449, marked as being considered and initialed by the Examiner, to the undersigned with the next official communication.

Please charge any additional fees or credit any overpayment to Deposit Account No. 13-2725.

Respectfully submitted,

MERCHANT & GOULD P.C.
P.O. Box 2903
Minneapolis, Minnesota 55402-0903
(612) 332-5300

Date: January 19, 2018

/David G. Schmaltz/
David G. Schmaltz
Reg. No. 39,828
DGS:PLSkaw

ALL REFERENCES CONSIDERED EXCEPT WHERE LINED THROUGH. /A.E.

FORM 1449* INFORMATION DISCLOSURE STATEMENT IN AN APPLICATION (Use several sheets if necessary)	Docket Number: 02316.2584US23	Application Number: NEW FILING
	Inventor: KOWALCZYK ET AL.	
	Filing Date: HEREWITH	Group Art Unit: UNKNOWN

U.S. PATENT DOCUMENTS						
EXAMINER INITIAL	DOCUMENT NO.	DATE	NAME	CLASS	SUBCLASS	FILING DATE IF APPROPRIATE
	1,276,825	08/27/1918	Swope			
	1,442,999	01/23/1923	Boyle			
	1,446,410	02/20/1923	Bennett et al.			
	1,474,580	11/20/1923	Clark et al.			
	RE 20,995	02/07/1939	Beasley			
	2,502,496	04/04/1950	Wickman			
	2,521,226	09/05/1950	Keller			
	2,727,703	12/20/1955	Bonnett			
	3,131,729	05/05/1964	Leysinger			
	3,657,491	04/18/1972	Ryder et al.			
	3,667,417	06/06/1972	Clinkenbeard			
	3,920,308	11/18/1975	Murray			
	3,940,086	02/24/1976	Stoqulet			
	4,053,118	10/11/1977	Aikins			
	4,081,258	03/28/1978	Goell et al.			
	4,201,278	05/06/1980	Balde			
	4,384,688	05/24/1983	Smith			
	4,587,801	05/13/1986	Missout et al.			
	4,635,875	01/13/1987	Apple			
	4,657,140	04/14/1987	Zagar et al.			
	4,666,237	05/19/1987	Mallinson			
	4,767,073	08/30/1988	Malzacher			
	4,869,437	09/26/1989	Berz et al.			
	4,883,337	11/28/1989	Dahlgren			
	4,913,369	04/03/1990	Lia et al.			
	4,939,798	07/10/1990	Last			

EXAMINER /AKM E ULLAH/	DATE CONSIDERED 05/02/2019

EXAMINER: Initial if reference considered, whether or not citation is in conformance with MPEP 609; draw line through citation if not in conformance and not considered. Include copy of this form for next communication to the Applicant.

*Substitute Disclosure Statement Form (PTO-1449) Patent and Trademark Office; U.S. DEPARTMENT OF COMMERCE

ALL REFERENCES CONSIDERED EXCEPT WHERE LINED THROUGH. /A.E.U.

FORM 1449* INFORMATION DISCLOSURE STATEMENT IN AN APPLICATION (Use several sheets if necessary)	Docket Number: 02316.2584US23	Application Number: NEW FILING
	Inventor: KOWALCZYK ET AL.	
	Filing Date: HEREWITH	Group Art Unit: UNKNOWN

	4,940,859	07/10/1990	Peterson			
	4,953,194	08/28/1990	Hansen et al.			
	4,968,929	11/06/1990	Hauck et al.			
	4,978,310	12/18/1990	Shichida			
	5,016,554	05/21/1991	Harris, Jr. et al.			
	5,052,940	10/01/1991	Bengal			
	5,066,149	11/19/1991	Wheeler et al.			
	5,066,256	11/19/1991	Ward, Sr.			
	5,071,211	12/10/1991	Debortoli et al.			
	5,074,863	12/24/1991	Dines			
	5,100,221	03/31/1992	Carney et al.			
	5,107,532	04/21/1992	Hansen et al.			
	5,161,988	11/10/1992	Krupka			
	5,166,970	11/24/1992	Ward			
	5,167,001	11/24/1992	Debortoli et al.			
	5,185,843	02/09/1993	Aberson et al.			
	5,222,164	06/22/1993	Bass, Sr. et al.			
	5,265,187	11/23/1993	Morin et al.			
	5,265,815	11/30/1993	Soyka et al.			
	5,280,861	01/25/1994	Corriveau			
	5,305,405	04/19/1994	Emmons et al.			
	5,317,663	05/31/1994	Beard et al.			
	5,326,040	07/05/1994	Kramer			
	5,335,874	08/09/1994	Shrum et al.			
	5,353,367	10/04/1994	Czosnowski et al.			
	5,393,249	02/28/1995	Morgenstern et al.			
	5,394,503	02/28/1995	Dietz, Jr. et al.			
	5,413,494	05/09/1995	Dewey et al.			
	5,418,334	05/23/1995	Williams			

EXAMINER /AKM E ULLAH/	DATE CONSIDERED 05/02/2019

EXAMINER: Initial if reference considered, whether or not citation is in conformance with MPEP 609; draw line through citation if not in conformance and not considered. Include copy of this form for next communication to the Applicant.

*Substitute Disclosure Statement Form (PTO-1449) Patent and Trademark Office; U.S. DEPARTMENT OF COMMERCE

ALL REFERENCES CONSIDERED EXCEPT WHERE LINED THROUGH. /A.E.U.

FORM 1449* INFORMATION DISCLOSURE STATEMENT IN AN APPLICATION (Use several sheets if necessary)	Docket Number: 02316.2584US23	Application Number: NEW FILING
	Inventor: KOWALCZYK ET AL.	
	Filing Date: HEREWITH	Group Art Unit: UNKNOWN

	5,419,717	05/30/1995	Abendschein et al.			
	5,434,944	07/18/1995	Kerry et al.			
	5,448,015	09/05/1995	Jamet et al.			
	5,448,675	09/05/1995	Leone et al.			
	5,467,062	11/14/1995	Burroughs et al.			
	5,473,715	12/05/1995	Schofield et al.			
	5,483,467	01/09/1996	Krupka et al.			
	5,490,229	02/06/1996	Ghandeharizadeh et al.			
	5,494,234	02/27/1996	Kramer			
	5,494,446	02/27/1996	DeLucia et al.			
	5,497,444	03/05/1996	Wheeler			
	5,519,275	05/21/1996	Scott et al.			
	5,522,561	06/04/1996	Koyamatsu et al.			
	5,544,836	08/13/1996	Pera			
	5,551,545	09/03/1996	Gelfman			
	5,613,030	03/18/1997	Hoffer et al.			
	5,638,481	06/10/1997	Arnett			
	5,657,412	08/12/1997	Caudrelier			
	5,685,741	11/11/1997	Dewey et al.			
	5,703,990	12/30/1997	Robertson et al.			
	5,709,347	01/20/1998	Hoffmann et al.			
	5,712,942	01/27/1998	Jennings et al.			
	5,717,810	02/10/1998	Wheeler			
	5,718,397	02/17/1998	Stevens			
	5,734,774	03/31/1998	Morrell			
	5,749,148	05/12/1998	White, III et al.			
	5,787,219	07/28/1998	Mueller et al.			
	5,821,510	10/13/1998	Cohen et al.			
	5,854,824	12/29/1998	Bengal et al.			

EXAMINER /AKM E ULLAH/	DATE CONSIDERED 05/02/2019

EXAMINER: Initial if reference considered, whether or not citation is in conformance with MPEP 609; draw line through citation if not in conformance and not considered. Include copy of this form for next communication to the Applicant.

*Substitute Disclosure Statement Form (PTO-1449) Patent and Trademark Office; U.S. DEPARTMENT OF COMMERCE

ALL REFERENCES CONSIDERED EXCEPT WHERE LINED THROUGH. /A.E.U.

FORM 1449* INFORMATION DISCLOSURE STATEMENT IN AN APPLICATION (Use several sheets if necessary)	Docket Number: 02316.2584US23	Application Number: NEW FILING
	Inventor: KOWALCZYK ET AL.	
	Filing Date: HEREWITH	Group Art Unit: UNKNOWN

	5,915,640	06/29/1999	Wagter et al.			
	5,987,203	11/16/1999	Abel et al.			
	5,987,207	11/16/1999	Hoke			
	5,992,787	11/30/1999	Burke			
	6,002,331	12/14/1999	Laor			
	6,077,108	06/20/2000	Lorscheider et al.			
	6,095,837	08/01/2000	David et al.			
	6,116,961	09/12/2000	Henneberger et al.			
	6,215,938 B1	04/10/2001	Reitmeier et al.			
	6,220,413 B1	04/24/2001	Walters et al.			
	6,222,908 B1	04/24/2001	Bartolutti et al.			
	6,222,975 B1	04/24/2001	Gilbert et al.			
	6,234,830 B1	05/22/2001	Ensz et al.			
	6,238,235 B1	05/29/2001	Shavit et al.			
	6,285,293 B1	09/04/2001	German et al.			
	6,300,877 B1	10/09/2001	Schannach et al.			
	6,315,598 B1	11/13/2001	Elliot et al.			
	6,330,148 B1	12/11/2001	Won et al.			
	6,330,307 B1	12/11/2001	Bloch et al.			
	6,350,148 B1	02/26/2002	Bartolutti et al.			
	6,367,347 B1	04/09/2002	Blaschke et al.			
	6,421,322 B1	07/16/2002	Koziy et al.			
	6,424,710 B1	07/23/2002	Bartolutti et al.			
	6,456,768 B1	09/24/2002	Boncek et al.			
	D466,479 S	12/03/2002	Pein et al.			
	6,494,396 B2	12/17/2002	Sugata			
	6,499,861 B1	12/31/2002	German et al.			
	6,511,231 B2	01/28/2003	Lampert et al.			
	6,522,737 B1	02/18/2003	Bartolutti et al.			

EXAMINER /AKM E ULLAH/	DATE CONSIDERED 05/02/2019

EXAMINER: Initial if reference considered, whether or not citation is in conformance with MPEP 609; draw line through citation if not in conformance and not considered. Include copy of this form for next communication to the Applicant.

*Substitute Disclosure Statement Form (PTO-1449) Patent and Trademark Office; U.S. DEPARTMENT OF COMMERCE

ALL REFERENCES CONSIDERED EXCEPT WHERE LINED THROUGH. /A.E.U.

FORM 1449* INFORMATION DISCLOSURE STATEMENT IN AN APPLICATION (Use several sheets if necessary)	Docket Number: 02316.2584US23	Application Number: NEW FILING
	Inventor: KOWALCZYK ET AL.	
	Filing Date: HEREWITH	Group Art Unit: UNKNOWN

	6,522,826 B2	02/18/2003	Gregory			
	6,533,216 B1	03/18/2003	Bumgarner et al.			
	6,554,221 B2	04/29/2003	Hinds			
	6,554,484 B2	04/29/2003	Lampert			
	6,574,586 B1	06/03/2003	David et al.			
	6,591,051 B2	07/08/2003	Solheid et al.			
	6,616,080 B1	09/09/2003	Edwards el al.			
	6,626,697 B1	09/30/2003	Martin et al.			
	6,636,152 B2	10/21/2003	Schannach et al.			
	6,643,443 B2	11/04/2003	Holman et al.			
	6,669,129 B1	12/30/2003	Shah			
	6,684,179 B1	01/27/2004	David			
	6,711,339 B2	03/23/2004	Puetz et al.			
	6,715,619 B2	04/06/2004	Kim et al.			
	6,725,177 B2	04/20/2004	David et al.			
	6,743,044 B2	06/01/2004	Musolf et al.			
	6,745,971 B1	06/08/2004	Renzoni			
	6,760,530 B1	07/06/2004	Mandry			
	6,793,408 B2	09/21/2004	Levy et al.			
	6,802,735 B2	10/12/2004	Pepe et al.			
	6,808,116 B1	10/26/2004	Eslambolchi et al.			
	6,814,624 B2	11/09/2004	Clark et al.			
	6,834,517 B1	12/28/2004	Sheehy, Jr.			
	6,845,207 B2	01/18/2005	Schray			
	6,850,685 B2	02/01/2005	Tinucci et al.			
	6,856,748 B1	02/15/2005	Elkins, II et al.			
	6,885,799 B2	04/26/2005	Lee			
	6,898,368 B2	05/24/2005	Colombo et al.			
	6,901,200 B2	05/31/2005	Schray			

EXAMINER /AKM E ULLAH/	DATE CONSIDERED 05/02/2019

EXAMINER: Initial if reference considered, whether or not citation is in conformance with MPEP 609; draw line through citation if not in conformance and not considered. Include copy of this form for next communication to the Applicant.

*Substitute Disclosure Statement Form (PTO-1449) Patent and Trademark Office; U.S. DEPARTMENT OF COMMERCE

ALL REFERENCES CONSIDERED EXCEPT WHERE LINED THROUGH. /A.E.U.

FORM 1449* INFORMATION DISCLOSURE STATEMENT IN AN APPLICATION (Use several sheets if necessary)	Docket Number: 02316.2584US23	Application Number: NEW FILING
	Inventor: KOWALCZYK ET AL.	
	Filing Date: HEREWITH	Group Art Unit: UNKNOWN

	6,905,363 B2	06/14/2005	Musolf et al.			
	6,915,058 B2	07/05/2005	Pons			
	6,932,517 B2	08/23/2005	Swayze et al.			
	6,933,441 B2	08/23/2005	Fuller et al.			
	6,937,725 B2	08/30/2005	Liao			
	6,944,387 B2	09/13/2005	Howell et al.			
	D510,068 S	09/27/2005	Haggay et al.			
	6,961,675 B2	11/01/2005	David			
	6,971,895 B2	12/06/2005	Sago et al.			
	6,976,867 B2	12/20/2005	Navarro et al.			
	6,997,410 B1	02/14/2006	Huang			
	7,000,863 B2	02/21/2006	Bethea et al.			
	7,011,538 B2	03/14/2006	Chang			
	7,016,590 B2	03/21/2006	Tanaka et al.			
	7,017,721 B1	03/28/2006	Bradford et al.			
	7,027,704 B2	04/11/2006	Frohlich et al.			
	7,077,710 B2	07/18/2006	Haggay et al.			
	7,081,808 B2	07/25/2006	Colombo et al.			
	7,112,090 B2	09/26/2006	Caveney et al.			
	7,123,810 B2	10/17/2006	Parrish			
	7,139,461 B2	11/21/2006	Puetz et al.			
	7,142,764 B2	11/28/2006	Allen et al.			
	7,153,142 B2	12/26/2006	Shifris et al.			
	7,165,728 B2	01/23/2007	Durrant et al.			
	7,193,422 B2	03/20/2007	Velleca et al.			
	7,210,858 B2	05/01/2007	Sago et al.			
	7,220,144 B1	05/22/2007	Elliot et al.			
	7,226,217 B2	06/05/2007	Benton et al.			
	7,234,944 B2	06/26/2007	Nordin et al.			

EXAMINER /AKM E ULLAH/	DATE CONSIDERED 05/02/2019

EXAMINER: Initial if reference considered, whether or not citation is in conformance with MPEP 609; draw line through citation if not in conformance and not considered. Include copy of this form for next communication to the Applicant.

*Substitute Disclosure Statement Form (PTO-1449) Patent and Trademark Office; U.S. DEPARTMENT OF COMMERCE

ALL REFERENCES CONSIDERED EXCEPT WHERE LINED THROUGH. /A.E.U.

FORM 1449* INFORMATION DISCLOSURE STATEMENT IN AN APPLICATION (Use several sheets if necessary)	Docket Number: 02316.2584US23	Application Number: NEW FILING
	Inventor: KOWALCZYK ET AL.	
	Filing Date: HEREWITH	Group Art Unit: UNKNOWN

	7,297,018 B2	11/20/2007	Caveney et al.			
	7,312,715 B2	12/25/2007	Shalts et al.			
	7,315,224 B2	01/01/2008	Gurovich et al.			
	7,315,681 B2	01/01/2008	Kewitsch			
	D559,186 S	01/08/2008	Kelmer			
	7,346,253 B2	03/18/2008	Bloodsworth et al.			
	7,352,289 B1	04/01/2008	Harris			
	7,364,108 B2	04/29/2008	Kim et al.			
	7,369,739 B2	05/06/2008	Kline et al.			
	7,370,106 B2	05/06/2008	Caveney			
	7,397,997 B2	07/08/2008	Ferris et al.			
	7,400,814 B1	07/15/2008	Hendrickson et al.			
	7,406,242 B1	07/29/2008	Braga			
	7,477,829 B2	01/13/2009	Kaplan			
	7,479,032 B2	01/20/2009	Hoath et al.			
	7,519,000 B2	04/14/2009	Caveney et al.			
	7,522,806 B2	04/21/2009	Hendrickson et al.			
	7,533,841 B1	05/19/2009	Harrison et al.			
	7,534,137 B2	05/19/2009	Caveney et al.			
	7,546,018 B2	06/09/2009	Hendrickson et al.			
	7,552,872 B2	06/30/2009	Tokita et al.			
	7,570,861 B2	08/04/2009	Smrha et al.			
	7,591,667 B2	09/22/2009	Gatnau Navarro et al.			
	7,676,136 B2	03/09/2010	Wakileh et al.			
	7,697,811 B2	04/13/2010	Murano et al.			
	7,711,233 B2	05/04/2010	Mahoney			
	7,715,679 B2	05/11/2010	Kowalczyk et al.			
	7,751,672 B2	07/06/2010	Smith et al.			
	7,756,379 B2	07/13/2010	Kowalczyk et al.			

EXAMINER /AKM E ULLAH/	DATE CONSIDERED 05/02/2019

EXAMINER: Initial if reference considered, whether or not citation is in conformance with MPEP 609; draw line through citation if not in conformance and not considered. Include copy of this form for next communication to the Applicant.

*Substitute Disclosure Statement Form (PTO-1449) Patent and Trademark Office; U.S. DEPARTMENT OF COMMERCE

ALL REFERENCES CONSIDERED EXCEPT WHERE LINED THROUGH. /A.E.U.

FORM 1449* INFORMATION DISCLOSURE STATEMENT IN AN APPLICATION (Use several sheets if necessary)	Docket Number: 02316.2584US23	Application Number: NEW FILING
	Inventor: KOWALCZYK ET AL.	
	Filing Date: HEREWITH	Group Art Unit: UNKNOWN

	7,809,234 B2	10/05/2010	Smith et al.			
	7,811,119 B2	10/12/2010	Caveney et al.			
	7,869,426 B2	01/11/2011	Hough et al.			
	7,869,682 B2	01/11/2011	Kowalczyk et al.			
	7,872,738 B2	01/18/2011	Abbott			
	7,885,505 B2	02/08/2011	Zimmel			
	7,894,701 B2	02/22/2011	Kowalczyk et al.			
	8,081,857 B2	12/20/2011	Nair et al.			
	8,131,126 B2	03/06/2012	Kowalczyk et al.			
	8,157,582 B2	04/17/2012	Frey et al.			
	8,189,984 B2	05/29/2012	Kowalczyk et al.			
	8,229,267 B2	07/24/2012	Kowalczyk et al.			
	8,254,740 B2	08/28/2012	Smith et al.			
	8,326,107 B2	12/04/2012	Cooke et al.			
	8,380,035 B2	02/19/2013	Kowalczyk et al.			
	8,422,847 B2	04/16/2013	Kowalczyk et al.			
	8,494,333 B2	07/23/2013	Kowalczyk et al.			
	8,494,334 B2	07/23/2013	Kowalczyk et al.			
	8,565,572 B2	10/22/2013	Krampotich et al.			
	8,705,929 B2	04/22/2014	Kowalczyk et al.			
	8,891,931 B2	11/18/2014	Kowalczyk et al.			
	8,929,706 B2	01/06/2015	Teymouri			
	8,938,147 B2	01/20/2015	Krampotich et al.			
	9,170,392 B2	10/27/2015	Krampotich et al.			
	9,261,663 B2	02/16/2016	Loeffelholz et al.			
	9,261,666 B2	02/16/2016	Kowalczyk et al.			
	9,341,802 B2	05/17/2016	Krampotich et al.			
	9,606,319 B2	03/28/2017	Kowalczyk et al.			
	2001/0019002 A1	09/06/2001	Walters et al.			

EXAMINER /AKM E ULLAH/	DATE CONSIDERED 05/02/2019

EXAMINER: Initial if reference considered, whether or not citation is in conformance with MPEP 609; draw line through citation if not in conformance and not considered. Include copy of this form for next communication to the Applicant.

*Substitute Disclosure Statement Form (PTO-1449) Patent and Trademark Office; U.S. DEPARTMENT OF COMMERCE

ALL REFERENCES CONSIDERED EXCEPT WHERE LINED THROUGH. /A.E.U.

FORM 1449* INFORMATION DISCLOSURE STATEMENT IN AN APPLICATION (Use several sheets if necessary)	Docket Number: 02316.2584US23	Application Number: NEW FILING
	Inventor: KOWALCZYK ET AL.	
	Filing Date: HEREWITH	Group Art Unit: UNKNOWN

	2001/0048044 A1	12/06/2001	Sugata			
	2002/0003186 A1	01/10/2002	Hinds			
	2002/0023814 A1	02/28/2002	Poutiatine			
	2002/0126980 A1	09/12/2002	Holman et al.			
	2002/0164121 A1	11/07/2002	Brennan, III et al.			
	2002/0171002 A1	11/21/2002	Krestsch et al.			
	2003/0037480 A1	02/27/2003	Davis			
	2004/0170369 A1	09/02/2004	Pons			
	2004/0240807 A1	12/02/2004	Frohlich et al.			
	2004/0244430 A1	12/09/2004	Sheehy, Jr.			
	2004/0258384 A1	12/23/2004	Trebesch et al.			
	2005/0103515 A1	05/19/2005	Fuller et al.			
	2005/0145522 A1	07/07/2005	Bloodworth et al.			
	2005/0184186 A1	08/25/2005	Tsoi et al.			
	2005/0213920 A1	09/29/2005	Tanaka et al.			
	2005/0247136 A1	11/10/2005	Cross et al.			
	2005/0258411 A1	11/24/2005	Zeitler			
	2006/0045458 A1	03/02/2006	Sasaki et al.			
	2006/0148279 A1	07/06/2006	German et al.			
	2006/0160395 A1	07/20/2006	Macauley et al.			
	2006/0163403 A1	07/27/2006	Dickson			
	2006/0183362 A1	08/17/2006	Mullaney et al.			
	2006/0210230 A1	09/21/2006	Kline et al.			
	2006/0280418 A1	12/14/2006	Mahoney			
	2007/0025675 A1	02/01/2007	Kramer			
	2007/0165995 A1	07/19/2007	Reagan et al.			
	2007/0189691 A1	08/16/2007	Barth et al.			
	2007/0237470 A1	10/11/2007	Aronson et al.			
	2008/0013909 A1	01/17/2008	Kostet et al.			

EXAMINER /AKM E ULLAH/	DATE CONSIDERED 05/02/2019

EXAMINER: Initial if reference considered, whether or not citation is in conformance with MPEP 609; draw line through citation if not in conformance and not considered. Include copy of this form for next communication to the Applicant.

*Substitute Disclosure Statement Form (PTO-1449) Patent and Trademark Office; U.S. DEPARTMENT OF COMMERCE

ALL REFERENCES CONSIDERED EXCEPT WHERE LINED THROUGH. /A.E.U.

FORM 1449* INFORMATION DISCLOSURE STATEMENT IN AN APPLICATION (Use several sheets if necessary)	Docket Number: 02316.2584US23	Application Number: NEW FILING
	Inventor: KOWALCZYK ET AL.	
	Filing Date: HEREWITH	Group Art Unit: UNKNOWN

	2008/0035778 A1	02/14/2008	Belden et al.			
	2008/0037945 A1	02/14/2008	Gniadek et al.			
	2008/0100467 A1	05/01/2008	Downie et al.			
	2008/0218947 A1	09/11/2008	Atkinson			
	2008/0236209 A1	10/02/2008	Conti et al.			
	2008/0292261 A1	11/27/2008	Kowalczyk et al.			
	2008/0315030 A1	12/25/2008	Hendrickson et al.			
	2009/0060441 A1	03/05/2009	Kowalczyk et al.			
	2009/0074370 A1	03/19/2009	Kowalczyk et al.			
	2009/0097846 A1	04/16/2009	Kozischek et al.			
	2009/0098763 A1	04/16/2009	Below et al.			
	2009/0166404 A1	07/02/2009	German et al.			
	2009/0190894 A1	07/30/2009	Nhep et al.			
	2009/0215310 A1	08/27/2009	Hoath et al.			
	2009/0257726 A1	10/15/2009	Redmann et al.			
	2009/0317047 A1	12/24/2009	Smith et al.			
	2010/0054680 A1	03/04/2010	Lochkovic et al.			
	2010/0054682 A1	03/04/2010	Cooke			
	2010/0054684 A1	03/04/2010	Cooke et al.			
	2010/0074587 A1	03/25/2010	Loeffelholz et al.			
	2010/0090830 A1	04/15/2010	Conti et al.			
	2010/0166376 A1	07/01/2010	Nair et al.			
	2010/0211664 A1	08/19/2010	Raza et al.			
	2010/0211665 A1	08/19/2010	Raza et al.			
	2010/0211697 A1	08/19/2010	Raza et al.			
	2010/0215049 A1	08/26/2010	Raza et al.			
	2010/0322583 A1	12/23/2010	Cooke et al.			
	2011/0044599 A1	02/24/2011	Kowalczyk et al.			
	2011/0092100 A1	04/21/2011	Coffey et al.			

EXAMINER /AKM E ULLAH/	DATE CONSIDERED 05/02/2019

EXAMINER: Initial if reference considered, whether or not citation is in conformance with MPEP 609; draw line through citation if not in conformance and not considered. Include copy of this form for next communication to the Applicant.

*Substitute Disclosure Statement Form (PTO-1449) Patent and Trademark Office; U.S. DEPARTMENT OF COMMERCE

ALL REFERENCES CONSIDERED EXCEPT WHERE LINED THROUGH. /A.E.U.

FORM 1449* INFORMATION DISCLOSURE STATEMENT IN AN APPLICATION (Use several sheets if necessary)	Docket Number: 02316.2584US23	Application Number: NEW FILING
	Inventor: KOWALCZYK ET AL.	
	Filing Date: HEREWITH	Group Art Unit: UNKNOWN

	2011/0094274 A1	04/28/2011	Conti et al.				
	2011/0103761 A1	05/05/2011	LeBlanc et al.				
	2011/0158598 A1	06/30/2011	LeBlanc et al.				
	2013/0094828 A1	04/18/2013	Loeffelholz et al.				
	2013/0170810 A1	07/04/2013	Badar et al.				
	2013/0170811 A1	07/04/2013	Kowalczyk et al.				
	2013/0242866 A1	09/19/2013	Lin et al.				
	2014/0010512 A1	01/09/2014	Kowalczyk et al.				
	2014/0010513 A1	01/09/2014	Kowalczyk et al.				
	2015/0063770 A1	03/05/2015	Kowalczyk et al.				
	2015/0093088 A1	04/02/2015	Matz et al.				
	2017/0199344 A1	07/13/2017	Kowalczyk et al.				
FOREIGN PATENT DOCUMENTS							
	DOCUMENT NO.	DATE	COUNTRY	CLASS	SUBCLASS	TRANSLATION	
						YES	NO
	1799296 A	07/05/2006	CN			Abstract	
	42 26 368 A1	02/10/1994	DE			Abstract	
	102 44 304 B3	03/18/2004	DE			Abstract	
	1 107 031 A1	06/13/2001	EP				
	2 618 195 A2	07/24/2013	EP				
	2 566 997 A1	01/10/1986	FR			Abstract	
	2 236 398 A	04/03/1991	GB				
	9-236709	09/09/1997	JP			Abstract	
	11-349230	12/21/1999	JP			Machine Translation	
	2003-114339	04/18/2003	JP			Abstract	
	2005-73365	03/17/2005	JP			Abstract	
	2005-249858	09/15/2005	JP			Abstract	
	2007-121609	05/17/2007	JP			Abstract	
	WO 2009/048680 A1	04/16/2009	PCT				

EXAMINER /AKM E ULLAH/	DATE CONSIDERED 05/02/2019

EXAMINER: Initial if reference considered, whether or not citation is in conformance with MPEP 609; draw line through citation if not in conformance and not considered. Include copy of this form for next communication to the Applicant.

*Substitute Disclosure Statement Form (PTO-1449) Patent and Trademark Office; U.S. DEPARTMENT OF COMMERCE

ALL REFERENCES CONSIDERED EXCEPT WHERE LINED THROUGH. /A.E.U.

FORM 1449* INFORMATION DISCLOSURE STATEMENT IN AN APPLICATION (Use several sheets if necessary)	Docket Number: 02316.2584US23	Application Number: NEW FILING
	Inventor: KOWALCZYK ET AL.	
	Filing Date: HEREWITH	Group Art Unit: UNKNOWN

	WO 2010/001400 A1	01/07/2010	PCT				
	WO 2010/081186 A1	07/22/2010	PCT				
	WO 2010/121639 A1	10/28/2010	PCT			Abstract	

OTHER DOCUMENTS (Including Author, Title, Date, Pertinent Pages, Etc.)		
		7 Inch Modules, ADC Telecommunications, Inc, © 1998, "7 Inch Connector Module with IFC", pp. 127
		Answer, CommScope Technologies LLC v. Clearfield, Inc., Case No. 0:17-cv-00307-PJS-BRT, 27 pages (April 24, 2017)
		Australian Examination Report for Application No. 2015205930; July 13, 2016; 4 pages
		Australian Office Action (Appln. No. 2008247361), dated November 8, 2013.
		Avaya's Enhanced SYSTIMAX® iPatch System Enables IT Managers to Optimise Network Efficiency and Cut Downtime, Press Release, 20 May 2003, obtained from http://www.avaya.com/usa/about-avaya/newsroom/news-releases/2003/pr-030520 on 01/07/2009
		Complaint relating to Civil Action No. 5:11-cv-02509-JS, ADC Telecommunications, Inc v. Opterna Am, Inc. filed April 11, 2011 (14 pages).
		Complaint relating to Civil Action No. 1:11cv-735 (GBL-IDD), ADC Telecommunications, Inc v. Opterna Am, Inc. filed July 12, 2011 (5 pages).
		Complaint, CommScope Technologies LLC v. Clearfield, Inc., Case No. 0:17-cv-00307, 77 pages (January 31, 2017)
		Complaint Exhibit G, CommScope Technologies LLC v. Clearfield, Inc., Case No. 0:17-cv-00307- PJS-BRT, 3 pages (January 31, 2017)
		Complaint Exhibit H, CommScope Technologies LLC v. Clearfield, Inc., Case No. 0:17-cv-00307-PJS-BRT, 3 pages (January 31, 2017)
		Defendant Clearfield Inc.'s Invalidity Claim Chart Exhibit 10, CommScope Technologies LLC v. Clearfield, Inc., Case No. 0:17-cv-00307-PJS-BRT, 36 pages (October 6, 2017)
		Defendant Clearfield Inc.'s Invalidity Claim Chart Exhibit 11, CommScope Technologies LLC v. Clearfield, Inc., Case No. 0:17-cv-00307-PJS-BRT, 60 pages (October 6, 2017)
		Defendant Clearfield Inc.'s Invalidity Claim Chart Table D, CommScope Technologies LLC v. Clearfield, Inc., Case No. 0:17-cv-00307-PJS-BRT, 7 pages (October 6, 2017)
		Defendant Clearfield Inc.'s Invalidity Claim Chart Table E, CommScope Technologies LLC v. Clearfield, Inc., Case No. 0:17-cv-00307-PJS-BRT, 7 pages (October 6, 2017)
		Defendant Clearfield Inc.'s Preliminary Invalidity Claim Charts and Disclosures, CommScope Technologies LLC v. Clearfield, Inc., Case No. 0:17-cv-00307-PJS-BRT, 62 pages (October 6, 2017)
		Description of Admitted Prior Art, 30 pages
		European Office Action for Application No. 151182271.5 – 1504; February 12, 2015, 7 pages

EXAMINER/AKM E ULLAH/	DATE CONSIDERED 05/02/2019

EXAMINER: Initial if reference considered, whether or not citation is in conformance with MPEP 609; draw line through citation if not in conformance and not considered. Include copy of this form for next communication to the Applicant.

*Substitute Disclosure Statement Form (PTO-1449) Patent and Trademark Office; U.S. DEPARTMENT OF COMMERCE

ALL REFERENCES CONSIDERED EXCEPT WHERE LINED THROUGH. /A.E.U.

FORM 1449* INFORMATION DISCLOSURE STATEMENT IN AN APPLICATION (Use several sheets if necessary)	Docket Number: 02316.2584US23	Application Number: NEW FILING
	Inventor: KOWALCZYK ET AL.	
	Filing Date: HEREWITH	Group Art Unit: UNKNOWN

		European Search Report for Application No. 13163032.9 mailed July 4, 2013
		European Search Report for Application No. 15182271.5 mailed December 2, 2015
		F3DF Modules, ADC Telecommunications, Inc. © 1995, "Individual 12-Pack Assemblies", pp. 90
		Fiber Cable Management Products, Third Edition, ADC Telecommunications, Inc., © 1995, 1998
		Fiber Distribution Frame, Pre-Terminated Rear Load Connector Module, Installation Instructions, ADC Telecommunications, Inc., © 2000
		Fiber Main Distribution Frame (FMDF), Fiber Terminal Block, Installation Instructions, ADC Telecommunications, Inc., © 2001
		Fiber Panel Products - Cable Management Tray Panels, ADC Telecommunications, Inc., © 1994, 1996 "72 Fiber Distribution Module (FDM) with Intrafacility Fiber Cable", pp. 56
		Fiber Panel Products, Second Edition, ADC Telecommunications, Inc., © 1994, 1996
		FL2000 Products – Preconfigured Panels, ADC Telecommunications, Inc., © 2000 "Rack or Cabinet Mount Termination Panel with Multifiber Cable", pp. 13
		FL2000 Products, ADC Telecommunications, Inc., © 1994, 1996
		FL2000 Products, ADC Telecommunications, Inc., © 1994, 1996, "Rack Mount Panel with Intrafacility Fiber Cable", pp. 16
		IFC Style Frame Modules, ADC Telecommunications, Inc., © 1995, "Connector Module Equipped with IFC", pp. 27
		Intelligent patching systems carving out a 'large' niche, Cabling Installation & Maintenance, Volume 12, Issue 7, July 2004 (5 pages).
		intelliMAC: The intelligent way to make Moves, Adds or Changes! NORDX/CDT ©2003 (6 pages).
		Petition for *Inter Partes* Review of U.S. Patent No. 8,705,929, Clearfield Inc. v. CommScope Technologies LLC, Case No. IPR2017-02122, 67 pages (September 15, 2017)
		Inter Partes Review Case No. IPR2017-02122, Ex. 1003 - Declaration of Dr. Michael Lebby, 141 pages (September 15, 2017)
		Inter Partes Review Case No. IPR2017-02122, Ex. 1004 - U.S. Patent No. 6,220,413 B1
		Inter Partes Review Case No. IPR2017-02122, Ex. 1005 - U.S. Patent No. 6,933,441 B2
		Inter Partes Review Case No. IPR2017-02122, Ex. 1006 - U.S. Patent No. 4,201,278
		Inter Partes Review Case No. IPR2017-02122, Ex. 1007 - Prosecution History of U.S. App. No. 12/182,705, filed on Jul. 30, 2008., 332 pages
		Inter Partes Review Case No. IPR2017-02122, Ex. 1008 – PCT Patent No. WO 2009/048680 A1
		Inter Partes Review Case No. IPR2017-02122, Ex. 1009 – European Patent No. 2 618 195 A2

EXAMINER /AKM E ULLAH/	DATE CONSIDERED 05/02/2019

EXAMINER: Initial if reference considered, whether or not citation is in conformance with MPEP 609; draw line through citation if not in conformance and not considered. Include copy of this form for next communication to the Applicant.

*Substitute Disclosure Statement Form (PTO-1449) Patent and Trademark Office; U.S. DEPARTMENT OF COMMERCE

ALL REFERENCES CONSIDERED EXCEPT WHERE LINED THROUGH. /A.E.U.

FORM 1449* INFORMATION DISCLOSURE STATEMENT IN AN APPLICATION (Use several sheets if necessary)	Docket Number: 02316.2584US23	Application Number: NEW FILING
	Inventor: KOWALCZYK ET AL.	
	Filing Date: HEREWITH	Group Art Unit: UNKNOWN

		Inter Partes Review Case No. IPR2017-02122, Ex. 1010 – File Wrapper of EP App. No. 13163032.9, downloaded from European Patent Office on August 10, 2017, 222 pages
		Inter Partes Review Case No. IPR2017-02122, Ex. 1011 - U.S. Patent No. 4,657,140
		Inter Partes Review Case No. IPR2017-02122, Ex. 1012 –USConec MTP® Brand Connectors Data Sheet (© 2014), 2 pages
		Inter Partes Review Case No. IPR2017-02122, Ex. 1013 – Katsuki Suematsu *et al*., "Super Low-Loss, Super High-Density Multi-Fiber Optical Connectors," Furukawa Review (n. 23), 2003 ("*Suematsu*")
		Inter Partes Review Case No. IPR2017-02122, Ex. 1014 - U.S. Patent No. 6,885,799 B2
		International Search Report and Written Opinion for PCT/US2008/062764 mailed August 8, 2008
		International Search Report and Written Opinion for PCT/US2008/075196 mailed November 18, 2008
		International Search Report and Written Opinion for PCT/US2008/072218 mailed March 18, 2009
		International Search Report and Written Opinion for PCT/US2010/052872 mailed January 12, 2011.
		International Search Report and Written Opinion for PCT/US2011/041605 mailed February 24, 2012
		Meredith, L., "Managers missing point of intelligent patching," *Daa Center News*, 21 June 2005, obtained 12/02/2008 from http://searchdatacenter.techtarget.com/news/article/0,289142,sid80_gcil099991,00.html.
		Next Generation Frame (NGF), Product Family Ordering Guide, ADC Telecommunications, Inc., © 1996, 1999, 2000, "Fiber Termination Blocks (FTB) Preterminated", pp. 8
		Next Generation Frame (NGF), Product Family Ordering Guide, ADC Telecommunications, Inc., © 1996, 1999, 2000
		Next Generation Frames - Fiber Termination Blocks, ADC Telecommunication, Inc., © 1998, "Fiber Termination Blocks (FTB) Preterminated" pp. 6
		Notice of Allowance for application Serial No. 13/924,191 mailed December 3, 2013
		Ohtsuki, F. et al., "Design of Optical Connectors with ID Modules," *Electronics and Communications in Japan*, Part 1, Vol. 77, No. 2, pp. 94-105 (February 1994).
		Plaintiff CommScope Technologies LLC's Memorandum in Support of Motion to Compel Discovery, CommScope Technologies LLC v. Clearfield, Inc., Case No. 0:17-cv-00307-PJS-BRT, 21 pages (October 9, 2017)
		Plaintiff CommScope Technologies LLC's Response to Defendant's First Set of Interrogatories to Plaintiff (Nos. 1-15), CommScope Technologies LLC v. Clearfield, Inc., Case No. 0:17-cv-00307-PJS-BRT, 26 pages (October 9, 2017)
		Plaintiff CommScope Technologies LLC's Supplemental Response to Defendant's Interrogatory No. 2, CommScope Technologies LLC v. Clearfield, Inc., Case No. 0:17-cv-00307-PJS-BRT, 5 pages (October 9, 2017)
		Plaintiff CommScope's Initial Claim Charts including Exhibits J and K, CommScope Technologies LLC v. Clearfield, Inc., Case No. 0:17-cv-00307-PJS-BRT, 28 pages (October 9, 2017)

EXAMINER /AKM E ULLAH/	DATE CONSIDERED 05/02/2019

EXAMINER: Initial if reference considered, whether or not citation is in conformance with MPEP 609; draw line through citation if not in conformance and not considered. Include copy of this form for next communication to the Applicant.

*Substitute Disclosure Statement Form (PTO-1449) Patent and Trademark Office; U.S. DEPARTMENT OF COMMERCE

ALL REFERENCES CONSIDERED EXCEPT WHERE LINED THROUGH. /A.E.U.

FORM 1449* INFORMATION DISCLOSURE STATEMENT IN AN APPLICATION (Use several sheets if necessary)	Docket Number: 02316.2584US23	Application Number: NEW FILING
	Inventor: KOWALCZYK ET AL.	
	Filing Date: HEREWITH	Group Art Unit: UNKNOWN

		Plaintiff's Notice of Dismissal relating to Civil Action No. 5:11-cv-02509-JS, ADC Telecommunications, Inc v. Opterna Am, Inc. filed July 12, 2011 (1 page).
		Supplemental Notice of Allowability for application Serial No. 13/924,191 mailed March 10, 2014
		Supplemental Notice of Allowability for application Serial No. 13/924,191 mailed March 14, 2014
		SYSTIMAX® iPatch System Wins Platinum Network of the Year Award, Press Release, 30 January 2003, obtained from http://www.avaya.com/usa/about-avaya/newsroom/news-releases/2003/pr-030130a on 01/07/2009.
		TrueNet; TFP Series Rack Mount Fiber Panels, Spec Sheet; May 2008; 8 pages
		Value-Added Module System, ADC Telecommunications, Inc., © 1993, 1194, 1998, "12-Pack Module Assemblies", pp. 30-31
		Preliminary Response by Patent Owner Under 37 C.F.R. § 42.107, Case IPR2017-02122, Paper No. 6, 71 pages (December 22, 2017)
		Ex. 2001 - Declaration of Casimer DeCusatis in Support of Patent Owner's Preliminary Response, Case IPR2017-02122
		Ex. 2002 - Office Action Mailed 06/19/2009 in connection with U.S. Patent Application Serial No. 12/182,705
		Ex. 2003 -Response to 06/19/2009 Office Action in connection with U.S. Patent Application Serial No. 12/182,705
		Ex. 2004 -U.S. Patent Application Publication Number 2006/021 0230 ("Kline")
		Ex. 2005 -Excerpts from the Merriam-Webster's Collegiate Dictionary (Tenth Edition) (2000)
		Ex. 2006 -Excerpts from the New Oxford American Dictionary (Third Edition) (2010)

142510
PATENT TRADEMARK OFFICE

EXAMINER /AKM E ULLAH/	DATE CONSIDERED 05/02/2019

EXAMINER: Initial if reference considered, whether or not citation is in conformance with MPEP 609; draw line through citation if not in conformance and not considered. Include copy of this form for next communication to the Applicant.

*Substitute Disclosure Statement Form (PTO-1449) Patent and Trademark Office; U.S. DEPARTMENT OF COMMERCE

ALL REFERENCES CONSIDERED EXCEPT WHERE LINED THROUGH. /A.E.U.

EAST Search History

EAST Search History (Interference)

Ref #	Hits	Search Query	DBs	Default Operator	Plurals	Time Stamp
L26	0	(dirst adj2 optic adj2 connector) and (second adj2 optic adj2 connector).clm.	USPAT	OR	ON	2019/05/02 14:26
L27	148	(first adj2 optic adj2 connector) and (second adj2 optic adj2 connector).clm.	USPAT	OR	ON	2019/05/02 14:27
L28	3	(optical adj2 connector)same (rotat$4)same (cable adj5 spool).clm.	USPAT	OR	ON	2019/05/02 14:27
L29	53	(fiber adj3 optic$4 adj5 network)and(fiber adj2 optic$4 adj3 enclosure)and (cable adj5 spool)and adapter and (cable with spool).clm.	USPAT	OR	ON	2019/05/02 14:28
L30	3	(optical adj2 connector)same (rotat$4)same (cable adj5 spool).clm.	USPAT	OR	ON	2019/05/02 14:28
L31	1833	(cable adj3 spool) and (rotat$4).clm.	USPAT	OR	ON	2019/05/02 14:29
L32	1	27 and 29 and 31	USPAT	OR	ON	2019/05/02 14:29

5/2/2019 2:31:28 PM
C:\Users\aullah\Documents\EAST\Workspaces\16028263.wsp

EAST Search History

EAST Search History (Prior Art)

Ref #	Hits	Search Query	DBs	Default Operator	Plurals	Time Stamp
L1	2	"15875605"	US-PGPUB; USPAT; FPRS; EPO; JPO; DERWENT; IBM_TDB	OR	ON	2019/05/02 13:00
L2	440376	G02B6/$.cpc.	US-PGPUB; USPAT; FPRS; EPO; JPO; DERWENT; IBM_TDB	OR	ON	2019/05/02 13:02
L3	171	(fiber adj3 optic$4 adj5 network)and(fiber adj2 optic$4 adj3 enclosure)and (cable adj5 spool)and adapter and (cable with spool)	US-PGPUB; USPAT; FPRS; EPO; JPO; DERWENT; IBM_TDB	OR	ON	2019/05/02 13:05
L4	32	(optical adj2 connector)same (rotat$4)same (cable adj5 spool)	US-PGPUB; USPAT; FPRS; EPO; JPO; DERWENT; IBM_TDB	OR	ON	2019/05/02 13:08
L5	11	3 and 4	US-PGPUB; USPAT; FPRS; EPO; JPO; DERWENT; IBM_TDB	OR	ON	2019/05/02 13:08
L6	0	3 and @pd<"20070807"	US-PGPUB; USPAT; FPRS; EPO; JPO; DERWENT; IBM_TDB	OR	ON	2019/05/02 13:11
L7	1	4 and @pd<"20070807"	US-PGPUB; USPAT; FPRS; EPO; JPO; DERWENT; IBM_TDB	OR	ON	2019/05/02 13:12
L8	226672	2 and @pd<"20070807"	US-PGPUB; USPAT; FPRS; EPO; JPO; DERWENT; IBM_TDB	OR	ON	2019/05/02 13:19
L9	0	3 and 4 and 8	US-PGPUB; USPAT; FPRS; EPO; JPO; DERWENT; IBM_TDB	OR	ON	2019/05/02 13:20
L10	0	3 and 8	US-PGPUB; USPAT; FPRS; EPO; JPO; DERWENT; IBM_TDB	OR	ON	2019/05/02 13:20

L11	182	8 and (cable adj3 spool) and (rotat$4)	US-PGPUB; USPAT; FPRS; EPO; JPO; DERWENT; IBM_TDB	OR	ON	2019/05/02 13:21
L12	115	8 and (cable adj3 spool) and (rotat$4)and (connector)	US-PGPUB; USPAT; FPRS; EPO; JPO; DERWENT; IBM_TDB	OR	ON	2019/05/02 13:21
L13	0	(dirst adj2 optic adj2 connector) and (second adj2 optic adj2 connector)	US-PGPUB; USPAT; FPRS; EPO; JPO; DERWENT; IBM_TDB	OR	ON	2019/05/02 13:22
L14	647	(first adj2 optic adj2 connector) and (second adj2 optic adj2 connector)	US-PGPUB; USPAT; FPRS; EPO; JPO; DERWENT; IBM_TDB	OR	ON	2019/05/02 13:22
L15	3	12 and 14	US-PGPUB; USPAT; FPRS; EPO; JPO; DERWENT; IBM_TDB	OR	ON	2019/05/02 13:23
L16	211	(jonathan near3 kaml).in.	US-PGPUB; USPAT; FPRS; EPO; JPO; DERWENT; IBM_TDB	OR	ON	2019/05/02 14:17
L17	0	(scott near3 kowalezyk).in.	US-PGPUB; USPAT; FPRS; EPO; JPO; DERWENT; IBM_TDB	OR	ON	2019/05/02 14:18
L18	320	(scott near3 kowalczyk).in.	US-PGPUB; USPAT; FPRS; EPO; JPO; DERWENT; IBM_TDB	OR	ON	2019/05/02 14:19
L19	140	(jonathan near3 coan).in.	US-PGPUB; USPAT; FPRS; EPO; JPO; DERWENT; IBM_TDB	OR	ON	2019/05/02 14:20
L20	0	3 and 12	US-PGPUB; USPAT; FPRS; EPO; JPO; DERWENT; IBM_TDB	OR	ON	2019/05/02 14:20
L21	65	3 and 16	US-PGPUB; USPAT; FPRS; EPO; JPO; DERWENT; IBM_TDB	OR	ON	2019/05/02 14:21
L22	82	3 and 18	US-PGPUB; USPAT; FPRS; EPO; JPO; DERWENT; IBM_TDB	OR	ON	2019/05/02 14:21

L23	45	3 and 19	US-PGPUB; USPAT; FPRS; EPO; JPO; DERWENT; IBM_TDB	OR	ON	2019/05/02 14:21
L24	27	21 and 22 and 23	US-PGPUB; USPAT; FPRS; EPO; JPO; DERWENT; IBM_TDB	OR	ON	2019/05/02 14:21
L25	0	11 and 24	US-PGPUB; USPAT; FPRS; EPO; JPO; DERWENT; IBM_TDB	OR	ON	2019/05/02 14:21

5/2/2019 2:25:48 PM
C:\Users\aullah\Documents\EAST\Workspaces\16028263.wsp

FORM 1449* INFORMATION DISCLOSURE STATEMENT IN AN APPLICATION (Use several sheets if necessary)	Docket Number: 02316.2584US23/ADC003176	Application Number: 15/875,605
	Inventor: KOWALCZYK ET AL.	
	Filing Date: 01/19/2018	Group Art Unit: 2874

U.S. PATENT DOCUMENTS						
EXAMINER INITIAL	DOCUMENT NO.	DATE	NAME	CLASS	SUBCLASS	FILING DATE IF APPROPRIATE
	2,282,156	05/05/1942	Benes			
	2,767,426	10/23/1956	Grupp			
	3,346,705	10/10/1967	Slinkard et al.			
	3,433,579	03/18/1969	Runnion			
	3,612,424	10/12/1971	Friedel			
	3,837,448	09/24/1974	Hagstrom			
	3,983,977	10/05/1976	Crabb			
	4,143,746	03/13/1979	Lowery			
	4,470,558	09/11/1984	Stamper			
	4,520,239	05/28/1985	Schwartz			
	4,953,810	09/04/1990	Stadig			
	5,172,841	12/22/1992	Friedman			
	5,246,377	09/21/1993	Kawahara et al.			
	5,310,356	05/10/1994	Obata et al.			
	5,528,453	06/18/1996	Berman et al.			
	5,773,757	06/30/1998	Kenney et al.			
	5,957,401	09/28/1999	O'Donnell			
	6,035,032	03/07/2000	Daoud			
	6,135,254	10/24/2000	Liao			
	6,176,559 B1	01/23/2001	Tiramani et al.			
	6,220,762 B1	04/24/2001	Kanai et al.			
	6,223,675 B1	05/01/2001	Watt et al.			
	6,286,777 B1	09/11/2001	Black			
	6,300,877 B1	10/09/2001	Schannach et al.			
	6,349,893 B1	02/26/2002	Daoud			
	6,361,360 B1	03/26/2002	Hwang et al.			

EXAMINER /AKM E ULLAH/	DATE CONSIDERED 05/02/2019

EXAMINER: Initial if reference considered, whether or not citation is in conformance with MPEP 609; draw line through citation if not in conformance and not considered. Include copy of this form for next communication to the Applicant.

*Substitute Disclosure Statement Form (PTO-1449) Patent and Trademark Office; U.S. DEPARTMENT OF COMMERCE

ALL REFERENCES CONSIDERED EXCEPT WHERE LINED THROUGH. /A.E.U.

Date Filed: SEPTEMBER 26, 2018 Sheet 2 of 4

FORM 1449* INFORMATION DISCLOSURE STATEMENT IN AN APPLICATION (Use several sheets if necessary)	Docket Number: 02316.2584US23/ADC003176	Application Number: 15/875,605
	Inventor: KOWALCZYK ET AL.	
	Filing Date: 01/19/2018	Group Art Unit: 2874

	6,419,175 B1	07/16/2002	Rankin, VI			
	6,433,274 B1	08/13/2002	Doss et al.			
	6,721,484 B1	04/13/2004	Blankenship et al.			
	6,758,314 B2	07/06/2004	Woodruff			
	6,819,854 B1	09/16/2004	Young et al.			
	6,948,680 B2	09/27/2005	Ganster			
	7,036,601 B2	05/02/2006	Berg et al.			
	7,050,041 B1	05/23/2006	Smith et al.			
	7,052,281 B1	05/30/2006	Meyberg et al.			
	7,306,101 B2	12/11/2007	Murry			
	RE45,153	09/23/2014	Hendrickson et al.			
	2002/0023984 A1	02/28/2002	Oppmann et al.			
	2002/0083538 A1	07/04/2002	Silverman et al.			
	2003/0042348 A1	03/06/2003	Salentine et al.			
	2003/0142817 A1	07/31/2003	Liao			
	2003/0230667 A1	12/18/2003	Ganster			
	2004/0052498 A1	03/18/2004	Colombo et al.			
	2004/0065443 A1	04/08/2004	Berg et al.			
	2004/0084271 A1	05/06/2004	Woodruff			
	2004/0200332 A1	10/14/2004	Chen			
	2004/0209505 A1	10/21/2004	Wade et al.			
	2005/0062881 A1	03/24/2005	Caci et al.			
	2005/0128769 A1	06/16/2005	Gozum et al.			
	2005/0185910 A1	08/25/2005	Zimmel			
	2005/0258203 A1	11/24/2005	Weaver			
	2006/0028198 A1	02/09/2006	Hoopengarner			
	2006/0054760 A1	03/16/2006	Murry			
	2006/0169856 A1	08/03/2006	Dorenkamp et al.			
	2006/0185953 A1	08/24/2006	Gieseke			

EXAMINER /AKM E ULLAH/	DATE CONSIDERED 05/02/2019

EXAMINER: Initial if reference considered, whether or not citation is in conformance with MPEP 609; draw line through citation if not in conformance and not considered. Include copy of this form for next communication to the Applicant.

*Substitute Disclosure Statement Form (PTO-1449) Patent and Trademark Office; U.S. DEPARTMENT OF COMMERCE

ALL REFERENCES CONSIDERED EXCEPT WHERE LINED THROUGH. /A.E.U.

FORM 1449* INFORMATION DISCLOSURE STATEMENT IN AN APPLICATION (Use several sheets if necessary)	Docket Number: 02316.2584US23/ADC003176	Application Number: 15/875,605
	Inventor: KOWALCZYK ET AL.	
	Filing Date: 01/19/2018	Group Art Unit: 2874

	2006/0186255 A1	08/24/2006	Rooker				
	2006/0187696 A1	08/24/2006	Lanni				
	2006/0231672 A1	10/19/2006	Eastwood et al.				
	2006/0264094 A1	11/21/2006	Young				
	2006/0266605 A1	11/30/2006	Caamano et al.				
	2007/0023559 A1	02/01/2007	Scapillato et al.				
	2007/0036506 A1	02/15/2007	Kewitsch				
	2007/0096538 A1	05/03/2007	Niemi et al.				
	2007/0108333 A1	05/17/2007	Kuramoto				
	2007/0176045 A1	08/02/2007	Chen				
	2008/0011514 A1	08/17/2008	Zheng et al.				
	2008/0011990 A1	01/17/2008	Kostet et al.				
	2008/0013893 A1	01/27/2008	Zheng et al.				
	2008/0093187 A1	04/24/2008	Roberts et al.				
	2008/0116312 A1	05/22/2008	Eastwood et al.				
	2008/0170831 A1	07/17/2008	Hendrickson et al.				
	2008/0199139 A1	08/21/2008	Henderson				
	2009/0057085 A1	03/05/2009	Caamano et al.				
FOREIGN PATENT DOCUMENTS							
	DOCUMENT NO.	DATE	COUNTRY	CLASS	SUBCLASS	TRANSLATION	
						YES	NO
	1-123203 A	05/16/1989	JP			Abstract	
	11-87006 A	03/30/1999	JP			Abstract	
OTHER DOCUMENTS (Including Author, Title, Date, Pertinent Pages, Etc.)							
		Defendant Clearfield Inc.'s Revised Preliminary Invalidity Claim Charts and Disclosures, Civil Action No. 17-cv-00307-PJS-BRT, 51 pages (December 11, 2017)					
		Defendant Clearfield Inc.'s Revised Invalidity Claim Chart Exhibit 10, CommScope Technologies LLC v. Clearfield, Inc., Case No. 0:17-cv-00307-PJS-BRT, 38 pages (December 11, 2017)					
		Defendant Clearfield Inc.'s Revised Invalidity Claim Chart Exhibit 11, CommScope Technologies LLC v. Clearfield, Inc., Case No. 0:17-cv-00307-PJS-BRT, 39 pages (December 11, 2017)					

EXAMINER /AKM E ULLAH/	DATE CONSIDERED 05/02/2019

EXAMINER: Initial if reference considered, whether or not citation is in conformance with MPEP 609; draw line through citation if not in conformance and not considered. Include copy of this form for next communication to the Applicant.

*Substitute Disclosure Statement Form (PTO-1449) Patent and Trademark Office; U.S. DEPARTMENT OF COMMERCE

ALL REFERENCES CONSIDERED EXCEPT WHERE LINED THROUGH. /A.E.U.

FORM 1449* INFORMATION DISCLOSURE STATEMENT IN AN APPLICATION (Use several sheets if necessary)	Docket Number: 02316.2584US23/ADC003176	Application Number: 15/875,605
	Inventor: KOWALCZYK ET AL.	
	Filing Date: 01/19/2018	Group Art Unit: 2874

		Defendant Clearfield Inc.'s Revised Invalidity Claim Chart Table D, CommScope Technologies LLC v. Clearfield, Inc., Case No. 0:17-cv-00307-PJS-BRT, 7 pages (December 11, 2017)
		Defendant Clearfield Inc.'s Revised Invalidity Claim Chart Table E, CommScope Technologies LLC v. Clearfield, Inc., Case No. 0:17-cv-00307-PJS-BRT, 6 pages (December 11, 2017)
		Defendant Clearfield Inc.'s Second Revised Preliminary Invalidity Claim Charts and Disclosures, Civil Action No. 17-cv-00307-PJS-BRT, 65 pages (January 12, 2018)
		Exhibit 10 to Second Revised Preliminary Invalidity Claim Charts and Disclosures, Civil Action No. 17-cv-00307-PJS-BRT, 43 pages (January 12, 2018)
		Exhibit 11 to Second Revised Preliminary Invalidity Claim Charts and Disclosures, Civil Action No. 17-cv-00307-PJS-BRT, 47 pages (January 12, 2018)
		Commscope's Response to Clearfield's Second Revised Invalidity Claim Charts and Disclosure, Civil Action No. 17-cv-00307-PJS-BRT, 105 pages (January 19, 2018)
		Exhibit J to Second Revised Preliminary Invalidity Claim Charts and Disclosures, Civil Action No. 17-cv-00307-PJS-BRT, 21 pages (January 19, 2018)
		Exhibit K to Second Revised Preliminary Invalidity Claim Charts and Disclosures, Civil Action No. 17-cv-00307-PJS-BRT, 19 pages (January 19, 2018)
		Joint Status Report, CommScope Technologies LLC v. Clearfield, Inc., Case No. 0:17-cv-00307-PJS-BRT, 11 pages (February 9, 2018
		Joint Status Report Exhibit A, CommScope Technologies LLC v. Clearfield, Inc., Case No. 0:17-cv-00307-PJS-BRT, 33 pages (February 9, 2018)
		Joint Status Report Exhibit B, CommScope Technologies LLC v. Clearfield, Inc., Case No. 0:17-cv-00307-PJS-BRT, 21 pages (February 9, 2018)
		Stipulation of Dismissal, CommScope Technologies LLC v. Clearfield, Inc., Case No. 0:17-cv-00307-PJS-BRT, 2 pages (February 19, 2018)
		Order of Dismissal, CommScope Technologies LLC v. Clearfield, Inc., Case No. 0:17-cv-00307-PJS-BRT, 1 page (February 20, 2018)

142510
PATENT TRADEMARK OFFICE

EXAMINER /AKM E ULLAH/	DATE CONSIDERED 05/02/2019

EXAMINER: Initial if reference considered, whether or not citation is in conformance with MPEP 609; draw line through citation if not in conformance and not considered. Include copy of this form for next communication to the Applicant.

*Substitute Disclosure Statement Form (PTO-1449) Patent and Trademark Office; U.S. DEPARTMENT OF COMMERCE

ALL REFERENCES CONSIDERED EXCEPT WHERE LINED THROUGH. /A.E.U.

FORM 1449* INFORMATION DISCLOSURE STATEMENT IN AN APPLICATION (Use several sheets if necessary)	Docket Number: 02316.2584US23/ADC003176	Application Number: 15/875,605
	Inventor: KOWALCZYK ET AL.	
	Filing Date: 01/19/2018	Group Art Unit: 2874

U.S. PATENT DOCUMENTS						
EXAMINER INITIAL	DOCUMENT NO.	DATE	NAME	CLASS	SUBCLASS	FILING DATE IF APPROPRIATE
	2,282,156	05/05/1942	Benes			
	2,767,426	10/23/1956	Grupp			
	3,346,705	10/10/1967	Slinkard et al.			
	3,433,579	03/18/1969	Runnion			
	3,612,424	10/12/1971	Friedel			
	3,837,448	09/24/1974	Hagstrom			
	3,983,977	10/05/1976	Crabb			
	4,143,746	03/13/1979	Lowery			
	4,470,558	09/11/1984	Stamper			
	4,520,239	05/28/1985	Schwartz			
	4,953,810	09/04/1990	Stadig			
	5,172,841	12/22/1992	Friedman			
	5,246,377	09/21/1993	Kawahara et al.			
	5,310,356	05/10/1994	Obata et al.			
	5,528,453	06/18/1996	Berman et al.			
	5,773,757	06/30/1998	Kenney et al.			
	5,957,401	09/28/1999	O'Donnell			
	6,035,032	03/07/2000	Daoud			
	6,135,254	10/24/2000	Liao			
	6,176,559 B1	01/23/2001	Tiramani et al.			
	6,220,762 B1	04/24/2001	Kanai et al.			
	6,223,675 B1	05/01/2001	Watt et al.			
	6,286,777 B1	09/11/2001	Black			
	6,300,877 B1	10/09/2001	Schannach et al.			
	6,349,893 B1	02/26/2002	Daoud			
	6,361,360 B1	03/26/2002	Hwang et al.			

EXAMINER	DATE CONSIDERED

EXAMINER: Initial if reference considered, whether or not citation is in conformance with MPEP 609; draw line through citation if not in conformance and not considered. Include copy of this form for next communication to the Applicant.

*Substitute Disclosure Statement Form (PTO-1449) Patent and Trademark Office; U.S. DEPARTMENT OF COMMERCE

FORM 1449* INFORMATION DISCLOSURE STATEMENT IN AN APPLICATION (Use several sheets if necessary)	Docket Number: 02316.2584US23/ADC003176	Application Number: 15/875,605
	Inventor: KOWALCZYK ET AL.	
	Filing Date: 01/19/2018	Group Art Unit: 2874

	6,419,175 B1	07/16/2002	Rankin, VI			
	6,433,274 B1	08/13/2002	Doss et al.			
	6,721,484 B1	04/13/2004	Blankenship et al.			
	6,758,314 B2	07/06/2004	Woodruff			
	6,819,854 B1	09/16/2004	Young et al.			
	6,948,680 B2	09/27/2005	Ganster			
	7,036,601 B2	05/02/2006	Berg et al.			
	7,050,041 B1	05/23/2006	Smith et al.			
	7,052,281 B1	05/30/2006	Meyberg et al.			
	7,306,101 B2	12/11/2007	Murry			
	RE45,153	09/23/2014	Hendrickson et al.			
	2002/0023984 A1	02/28/2002	Oppmann et al.			
	2002/0083538 A1	07/04/2002	Silverman et al.			
	2003/0042348 A1	03/06/2003	Salentine et al.			
	2003/0142817 A1	07/31/2003	Liao			
	2003/0230667 A1	12/18/2003	Ganster			
	2004/0052498 A1	03/18/2004	Colombo et al.			
	2004/0065443 A1	04/08/2004	Berg et al.			
	2004/0084271 A1	05/06/2004	Woodruff			
	2004/0200332 A1	10/14/2004	Chen			
	2004/0209505 A1	10/21/2004	Wade et al.			
	2005/0062881 A1	03/24/2005	Caci et al.			
	2005/0128769 A1	06/16/2005	Gozum et al.			
	2005/0185910 A1	08/25/2005	Zimmel			
	2005/0258203 A1	11/24/2005	Weaver			
	2006/0028198 A1	02/09/2006	Hoopengarner			
	2006/0054760 A1	03/16/2006	Murry			
	2006/0169856 A1	08/03/2006	Dorenkamp et al.			
	2006/0185953 A1	08/24/2006	Gieseke			

EXAMINER	DATE CONSIDERED
EXAMINER: Initial if reference considered, whether or not citation is in conformance with MPEP 609; draw line through citation if not in conformance and not considered. Include copy of this form for next communication to the Applicant.	

*Substitute Disclosure Statement Form (PTO-1449) Patent and Trademark Office; U.S. DEPARTMENT OF COMMERCE

FORM 1449* INFORMATION DISCLOSURE STATEMENT IN AN APPLICATION (Use several sheets if necessary)	Docket Number: 02316.2584US23/ADC003176	Application Number: 15/875,605
	Inventor: KOWALCZYK ET AL.	
	Filing Date: 01/19/2018	Group Art Unit: 2874

	2006/0186255 A1	08/24/2006	Rooker				
	2006/0187696 A1	08/24/2006	Lanni				
	2006/0231672 A1	10/19/2006	Eastwood et al.				
	2006/0264094 A1	11/21/2006	Young				
	2006/0266605 A1	11/30/2006	Caamano et al.				
	2007/0023559 A1	02/01/2007	Scapillato et al.				
	2007/0036506 A1	02/15/2007	Kewitsch				
	2007/0096538 A1	05/03/2007	Niemi et al.				
	2007/0108333 A1	05/17/2007	Kuramoto				
	2007/0176045 A1	08/02/2007	Chen				
	2008/0011514 A1	08/17/2008	Zheng et al.				
	2008/0011990 A1	01/17/2008	Kostet et al.				
	2008/0013893 A1	01/27/2008	Zheng et al.				
	2008/0093187 A1	04/24/2008	Roberts et al.				
	2008/0116312 A1	05/22/2008	Eastwood et al.				
	2008/0170831 A1	07/17/2008	Hendrickson et al.				
	2008/0199139 A1	08/21/2008	Henderson				
	2009/0057085 A1	03/05/2009	Caamano et al.				
FOREIGN PATENT DOCUMENTS							
	DOCUMENT NO.	DATE	COUNTRY	CLASS	SUBCLASS	TRANSLATION	
						YES	NO
	1-123203 A	05/16/1989	JP			Abstract	
	11-87006 A	03/30/1999	JP			Abstract	
OTHER DOCUMENTS (Including Author, Title, Date, Pertinent Pages, Etc.)							
		Defendant Clearfield Inc.'s Revised Preliminary Invalidity Claim Charts and Disclosures, Civil Action No. 17-cv-00307-PJS-BRT, 51 pages (December 11, 2017)					
		Defendant Clearfield Inc.'s Revised Invalidity Claim Chart Exhibit 10, CommScope Technologies LLC v. Clearfield, Inc., Case No. 0:17-cv-00307-PJS-BRT, 38 pages (December 11, 2017)					
		Defendant Clearfield Inc.'s Revised Invalidity Claim Chart Exhibit 11, CommScope Technologies LLC v. Clearfield, Inc., Case No. 0:17-cv-00307-PJS-BRT, 39 pages (December 11, 2017)					

EXAMINER	DATE CONSIDERED
EXAMINER: Initial if reference considered, whether or not citation is in conformance with MPEP 609; draw line through citation if not in conformance and not considered. Include copy of this form for next communication to the Applicant.	

*Substitute Disclosure Statement Form (PTO-1449) Patent and Trademark Office; U.S. DEPARTMENT OF COMMERCE

FORM 1449* INFORMATION DISCLOSURE STATEMENT IN AN APPLICATION (Use several sheets if necessary)	Docket Number: 02316.2584US23/ADC003176	Application Number: 15/875,605
	Inventor: KOWALCZYK ET AL.	
	Filing Date: 01/19/2018	Group Art Unit: 2874

		Defendant Clearfield Inc.'s Revised Invalidity Claim Chart Table D, CommScope Technologies LLC v. Clearfield, Inc., Case No. 0:17-cv-00307-PJS-BRT, 7 pages (December 11, 2017)
		Defendant Clearfield Inc.'s Revised Invalidity Claim Chart Table E, CommScope Technologies LLC v. Clearfield, Inc., Case No. 0:17-cv-00307-PJS-BRT, 6 pages (December 11, 2017)
		Defendant Clearfield Inc.'s Second Revised Preliminary Invalidity Claim Charts and Disclosures, Civil Action No. 17-cv-00307-PJS-BRT, 65 pages (January 12, 2018)
		Exhibit 10 to Second Revised Preliminary Invalidity Claim Charts and Disclosures, Civil Action No. 17-cv-00307-PJS-BRT, 43 pages (January 12, 2018)
		Exhibit 11 to Second Revised Preliminary Invalidity Claim Charts and Disclosures, Civil Action No. 17-cv-00307-PJS-BRT, 47 pages (January 12, 2018)
		Commscope's Response to Clearfield's Second Revised Invalidity Claim Charts and Disclosure, Civil Action No. 17-cv-00307-PJS-BRT, 105 pages (January 19, 2018)
		Exhibit J to Second Revised Preliminary Invalidity Claim Charts and Disclosures, Civil Action No. 17-cv-00307-PJS-BRT, 21 pages (January 19, 2018)
		Exhibit K to Second Revised Preliminary Invalidity Claim Charts and Disclosures, Civil Action No. 17-cv-00307-PJS-BRT, 19 pages (January 19, 2018)
		Joint Status Report, CommScope Technologies LLC v. Clearfield, Inc., Case No. 0:17-cv-00307-PJS-BRT, 11 pages (February 9, 2018
		Joint Status Report Exhibit A, CommScope Technologies LLC v. Clearfield, Inc., Case No. 0:17-cv-00307-PJS-BRT, 33 pages (February 9, 2018)
		Joint Status Report Exhibit B, CommScope Technologies LLC v. Clearfield, Inc., Case No. 0:17-cv-00307-PJS-BRT, 21 pages (February 9, 2018)
		Stipulation of Dismissal, CommScope Technologies LLC v. Clearfield, Inc., Case No. 0:17-cv-00307-PJS-BRT, 2 pages (February 19, 2018)
		Order of Dismissal, CommScope Technologies LLC v. Clearfield, Inc., Case No. 0:17-cv-00307-PJS-BRT, 1 page (February 20, 2018)

142510
PATENT TRADEMARK OFFICE

EXAMINER	DATE CONSIDERED
EXAMINER: Initial if reference considered, whether or not citation is in conformance with MPEP 609; draw line through citation if not in conformance and not considered. Include copy of this form for next communication to the Applicant.	

*Substitute Disclosure Statement Form (PTO-1449) Patent and Trademark Office; U.S. DEPARTMENT OF COMMERCE

PAT-NO: JP401123203A
DOCUMENT-IDENTIFIER: JP 01123203 A
TITLE: OPTICAL CABLE CONNECTING BOX FOR WIRING IN ROOM
PUBN-DATE: May 16, 1989

INVENTOR-INFORMATION:

NAME	COUNTRY
MIYAKE, HIDEJI	
TANABE, ETSUO	
UJINO, TADASHI	
ITO, KEIICHI	

ASSIGNEE-INFORMATION:

NAME	COUNTRY
FURUKAWA ELECTRIC CO LTD:THE	N/A

APPL-NO: JP62282325
APPL-DATE: November 9, 1987

INT-CL (IPC): G02B006/38

ABSTRACT:

PURPOSE: To improve appearance and to prevent malfunction of an opening/ closing cap by embedding a box body into a floor, etc., and exposing the same only on the base plate side of said body and prohibiting the operation of a locking mechanism for the opening/closing cap unless the revolving shaft thereof is rotated.

CONSTITUTION: This connecting box has the flush type box body 2 which has an optical cable leading-in hole 3, the base plate 7 which is mounted to the box body 2 so as close an aperture 9 thereof, the opening/closing cap 10 which is supported freely openably and closably at one end to the aperture of the base plate, a spring which energizes the opening/closing cap toward an open direction, and the locking mechanism 18 which is assembled to the rear face of the base plate and locks the opening/closing cap in the open or close state while the opening/closing cap is in either state. The box body is thereby embedded into a floor, etc., and only the base plate side thereof is exposed. The locking mechanism executes the control to rotate a locking lever to a locking state or unlocking state when the revolving shaft is rotated. The appearance is thereby improved and the control is executed only when needed. The malfunction is thus prevented.

COPYRIGHT: (C)1989,JPO&Japio

⑲日本国特許庁（JP）　⑪特許出願公開

⑫公開特許公報（A）　平1－123203

⑤Int.Cl.⁴　識別記号　庁内整理番号　㊸公開　平成1年(1989)5月16日
G 02 B 6/38　Z－8507－2H

審査請求　未請求　発明の数 1　（全5頁）

⑤発明の名称　室内配線用光ケーブル接続箱

㉑特　願　昭62－282325
㉒出　願　昭62(1987)11月9日

⑫発明者　三宅　秀次　千葉県市原市八幡海岸通6　古河電気工業株式会社千葉電線製造所内
⑫発明者　田辺　悦男　千葉県市原市八幡海岸通6　古河電気工業株式会社千葉電線製造所内
⑫発明者　宇治野　正　千葉県市原市八幡海岸通6　古河電気工業株式会社千葉電線製造所内
⑫発明者　伊藤　恵一　千葉県市原市八幡海岸通6　古河電気工業株式会社千葉電線製造所内
⑪出願人　古河電気工業株式会社　東京都千代田区丸の内2丁目6番1号
⑭代理人　弁理士　松本　英俊

明　細　書

1．発明の名称

室内配線用光ケーブル接続箱

2．特許請求の範囲

光ケーブル引込穴を有する埋込型箱本体と、前記埋込型箱本体の開口部を塞いで取付けられている基板と、前記基板の開口部に片持ち支持で開閉自在に支持された開閉蓋と、前記開閉蓋を開方向に付勢しているスプリングと、前記基板の裏面に組付けられていて前記開閉蓋が開又は閉状態にあるときその各状態で該開閉蓋をロックするロック機構とを備え、前記ロック機構は前記基板にあけられた段付セット穴に上端のドライバー溝を有する端部を臨ませて回転自在にセットされた回転軸と、前記回転軸の外周に嵌合され且つ該回転軸の下端を底部から外部に導出させたケーシングと、前記ケーシング内で前記回転軸の外周に嵌合されて一端が該回転軸に係止され他端が前記ケーシングに係止されたスプリングと、前記ケーシングの底部から導出された前記回転軸に基端が固定されていて待機状態で前記開閉蓋を閉状態又は開状態にロックするロックレバーと、前記ケーシングに設けられて前記ロックレバーの回転範囲を規制するレバーストッパー部とにより構成されていることを特徴とする室内配線用光ケーブル接続箱。

3．発明の詳細な説明

［産業上の利用分野］

本発明は、例えば床下に配線された光ケーブルと室内の機器につながる光ケーブルとをつなぐ室内配線用光ケーブル接続箱に関するものである。

［従来技術］

従来のこの種の室内配線用光ケーブル接続箱は、床面上に設置される構造であり、またこの接続箱の開閉蓋は前後に直線移動するロックレバーでロックされる構造であった。

［発明が解決しようとする問題点］

しかしながら、このような構造では全体的に床面上に露出されているので、美観が悪い問題点があった。また、従来の構造では、開閉蓋をロックするロック機構のロックレバーが前後に直線移動

IPR2025-01119
Page 244 of 348
Belden EX1023

する構造であるため、足の移動とか机の移動とかの自然な動きがたまたま加えられたとき、ロックが外れてしまう問題点があった。

本発明の目的は、美観を向上でき、且つ不自然なときにロックが外れるのを防止できる室内配線用光ケーブル接続箱を提供することにある。

［問題点を解決するための手段］

上記の目的を達成するための本発明の構成を説明すると、本発明の室内配線用光ケーブル接続箱は、光ケーブル引込穴を有する埋込型箱本体と、前記埋込型箱本体の開口部を塞いで取付けられている基板と、前記基板の開口部に片持ち支持で開閉自在に支持された開閉蓋と、前記開閉蓋を開方向に付勢しているスプリングと、前記基板の裏面に組付けられていて前記開閉蓋が開又は閉状態にあるときその各状態で該開閉蓋をロックするロック機構とを備え、前記ロック機構は前記基板にあけられた段付セット穴に上端のドライバー溝を有する端部を臨ませて回転自在にセットされた回転軸と、前記回転軸の外周に嵌合され且つ該回転軸の下端を底部から外部に導出させたケーシングと、前記ケーシング内で前記回転軸の外周に嵌合されて一端が該回転軸に係止され他端が前記ケーシングに係止されたスプリングと、前記ケーシングの底部から導出された前記回転軸に基端が固定されていて待機状態で前記開閉蓋を閉状態又は開状態にロックするロックレバーと、前記ケーシングに設けられて前記ロックレバーの回転範囲を規制するレバーストッパー部とにより構成されていることを特徴とする。

［作用］

このような室内配線用光ケーブル接続箱は、箱本体を床等の内部に埋込み、露出させるのは基板側だけとするので、美観を向上させることができる。また、ロック機構は回転軸を回転させることによりロックレバーを回転させてロック状態にするか、ロックを外すかの制御をするので、必要なときだけ制御することができ、誤動作を防止することができる。

［実施例］

以下、本発明の実施例を図面を参照して詳細に説明する。第1図乃至第12図に示すように、本実施例の光ケーブル接続箱は、床1に埋込まれている金属製の箱本体2を有する。箱本体2の底部には、光ケーブル引込穴3が開けられている。床1内にはフロアダクト4が埋設され、フロアダクト4のダクト穴4Aと箱本体2の光ケーブル引込穴3とは、合致するように箱本体2の位置決めがなされている。フロアダクト4内に引込まれている光ケーブル5は、光ケーブル引込穴3から箱本体2内に所要の余長をもたせて引込まれている。箱本体2内の光ケーブル5の先端には光コネクタ6が取付けられている。箱本体2の上面開口部には基板7が載置され、ネジ8で箱本体2に固定されている。基板7の中央には、開口部9が設けられている。開口部9は開閉蓋10で開閉されるようになっている。開閉蓋10は基板7の裏側でヒンジ11により開閉自在に片持ち支持されている。また、開閉蓋10はスプリング12より開方向に付勢されている。

開閉蓋10の裏面には、ブラケット13が固設され、該ブラケット13はアダプタホルダ14がネジ15で交換可能に支持されている。アダプタホルダ14には、アダプタ16が開閉蓋10に対して平行する向きで貫通支持されている。アダプタ16には、光ケーブル5の先端の光コネクタ6の先端が差込み支持されている。ブラケット13の下部には、開き阻止用ロック片17が開閉蓋10側に折り返して突設されている。

アダプタ16の先端に対向する側で、基板7の裏面には、開閉蓋10が開又は閉状態にあるときその各状態で該開閉蓋10をロックするロック機構18が設けられている。ロック機構18は基板7の段付セット穴19に回転自在に且つ上方に脱出しないようにして上部が嵌め込まれた回転軸20を有する。該回転軸20の頂部には、ドライバー溝20Aが設けられている。該回転軸20の頂部外周には、段付セット穴19に適合する段部20Bが設けられている。また、回転軸20には、下向きに開口して同心状にスプリング収容凹部2

ＯＣが設けられ、且つ該スプリング収容凹部２０Ｃより径方向に見て内側の大径部２０Ｄの先には段部２０Ｅを介して小径部２０Ｆが設けられ、スプリング収容凹部２０Ｃより径方向に見て外側の円筒部２０Ｇにはスプリング係止溝２０Ｈが下端から段部２０Ｂ側に向けて形成されている。大径部２０Ｄの外周にはスプリング２１が嵌合され、その一端はスプリング係止溝２０Ｈに挿入されて回り止めされている。回転軸２０の下部外周には段部２０Ｅをストッパーとしてケーシング２２が嵌合され、該ケーシング２２の下部の穴２２Ａから小径部２０Ｆが外部に導出されている。ケーシング２２の上部にはフランジ２２Ｂが設けられ、該フランジ２２Ｂを貫通するネジ２３によりケーシング２２は基板７の裏面に固定されている。ケーシング２２の底面には、下向き突出されてレバーストッパー部２２Ｃが直角な向きでＬ字状に突設されている。ケーシング２２には、スプリング２１の他端を係止するスプリング係止溝２２Ｄが設けられている。ケーシング２２の底部から突出された回転軸２０の小径部２０Ｆの外周にはロックレバー２４の基部が嵌合され、ピン２５で回り止め固定されている。該ロックレバー２４はレバーストッパー部２２Ｃで許容された９０°の範囲内で回転できるようになっている。ケーシング２２の底部には、ロックレバー２４を下降しないように支える支え板２６がネジ２７で固定されている。

室内の機器につながる光ケーブル２８の先端の光コネクタ２９は、第１図に示すように開閉蓋１０が開いているとき、アダプタ１６に挿入されて光コネクタ６に接続されるようになっている。

このような室内配線用光ケーブル接続箱は、光コネクタ２９を接続してないときには、第２図及び第３図に示す状態で待機している。この状態では、箱本体２側の光コネクタ６は該箱本体２内に収納されているので、光コネクタ６の接続面が汚れたり、損傷されたりするのを防止できる。また、この状態では、この室内配線用光ケーブル接続箱は、箱本体２側が床等に埋込まれているので、露出タイプのものに比べて室内の美観を向上させることができる。開閉蓋１０が閉じた状態では、第２図に示すように開き防止用ロック片１７がロックレバー２４の下面に当り、該ロックレバー２４をストッパーとして開閉蓋１０の開きがスプリング１２の付勢に拘らず阻止されている。

かかる状態で、ロック機構１８の回転軸２０をドライバー溝２０Ａを利用して時計方向に回すと、ロックレバー２４が一緒に回り、開き防止用ロック片１７から離れ、開閉蓋１０のロックが外れる。このとき、回転軸２０の回転によりスプリング２１が蓄勢される。開閉蓋１０のロックが外れると、スプリング１２の付勢により、該開閉蓋１０が第２図で時計方向にヒンジ１１を中心として回転し、第１図に示すような開き状態になる。回転軸２０を時計方向に回していた外力を除去すると、スプリング２１の付勢により回転軸２０及びロックレバー２４は反時計方向に回転して元に待機姿勢に戻る。この状態では、第１図に示すように、開閉蓋１０のブラケット１３の下面がロックレバー２４で支えられていて、開閉蓋１０が外力が加わっても閉じない状態にロックされている。従って、この状態では光コネクタ２９をアダプタ１６を介して光コネクタ６に接続できる。またこの状態では、前述したように開閉蓋１０が閉じないようにロックされているので、開閉蓋１０の閉動作で光コネクタ２９や光ケーブル２８が損傷されるのを回避できる。

［発明の効果］

以上説明したように本発明に係る室内配線用光ケーブル接続箱においては、箱本体を床等の内部に埋込み、露出させるのは基板側だけとするので、美観を向上させることができる。また、開閉蓋のロック機構はその回転軸をまわさないかぎり操作できないので、開閉蓋の誤動作を防止することができる。

４．図面の簡単な説明

第１図及び第２図は本発明に係る光ケーブル接続箱の一実施例における使用状態で開閉蓋を開いた状態と閉じた各状態の縦断面図、第３図は第２

IPR2025-01119
Page 246 of 348
Belden EX1023

図の状態における光ケーブル接続箱の平面図、第4図及び第5図は基板側の組付け状態を示す一部破断側面図及び底面図、第6図は基板側の分解状態の一部縦断側面図、第7図はロック機構の支え板を外した状態における平面図、第8図及び第9図は回転軸の縦断面図及び底面図、第10図乃至第12図はハウジングの平面図，縦断面図及び底面図である。

1…床、2…箱本体、3…ケーブル引込穴、4…フロアダクト、4A…ダクト穴、5…光ケーブル、6…光コネクタ、7…基板、8…ネジ、9…開口部、10…開閉蓋、11…ヒンジ、12…スプリング、13…ブラケット、14…アダプタホルダ、15…ネジ、16…アダプタ、17…開き阻止用ロック片、18…ロック機構、20…回転軸、20A…ドライバー溝、21…スプリング、22…ケーシング、24…ロックレバー、28…光ケーブル、29…光コネクタ。

代理人　弁理士　松本英俊

第1図

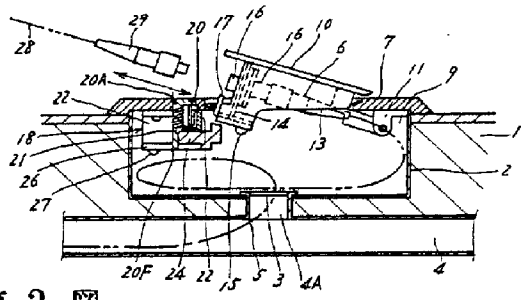

第2図

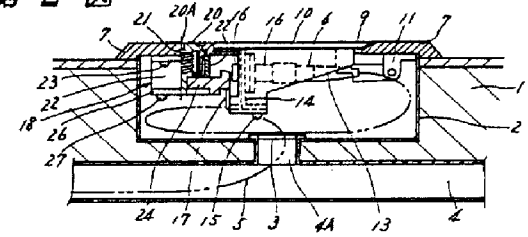

第3図

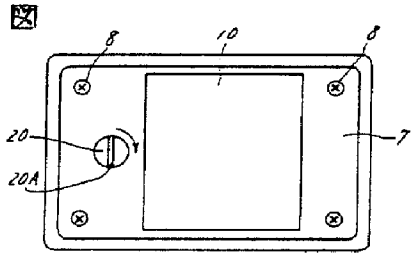

第4図

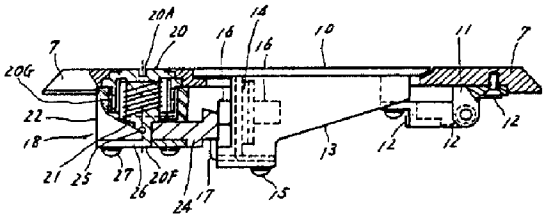

第5図

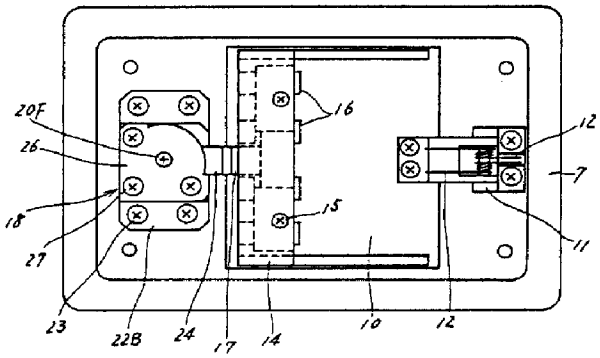

第6図

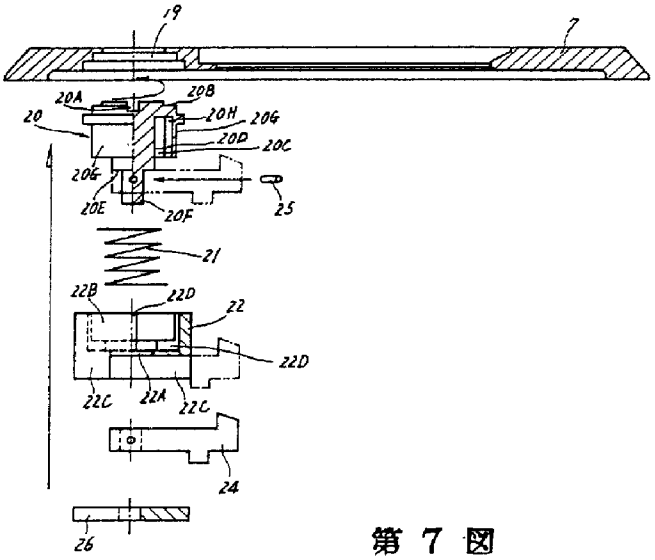

第7図

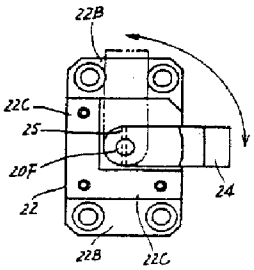

第 8 図

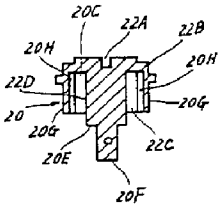

第 9 図

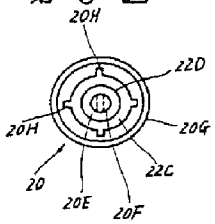

第 10 図

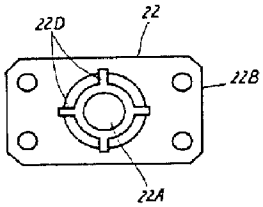

第 11 図

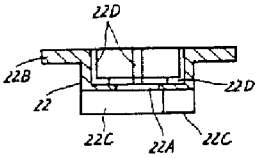

第 12 図

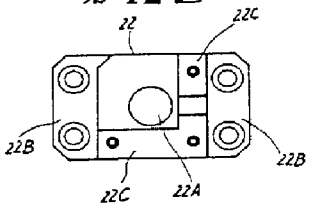

PAT-NO: JP411087006A
DOCUMENT-IDENTIFIER: JP 11087006 A
TITLE: ROTARY CONNECTOR
PUBN-DATE: March 30, 1999

INVENTOR-INFORMATION:

NAME	COUNTRY
MUKAI, YASUHIKO	
UENO, SEIICHI	

ASSIGNEE-INFORMATION:

NAME	COUNTRY
FURUKAWA ELECTRIC CO LTD:THE	N/A

APPL-NO: JP09242870
APPL-DATE: September 8, 1997

INT-CL (IPC): H01R035/04 , B60R016/02 , B62D001/04

ABSTRACT:

PROBLEM TO BE SOLVED: To reduce the number of part items for silencing such as a sound-proof sheet and a vibration control plate as far as possible by forming a rotary case so that an upper flange and a lower flange extend radially outward direction are integrally formed with an upper and a lower parts of an inner cylinder.

SOLUTION: In a rotary connector 1, a locking projection 2d of a rotary case 2 is locked with a corresponding lock hole 4c of a sleeve 4, and the rotary case 2 and a fixed case 3 are assembled freely to be rotated in relation to each other without separating from each other, and the rotary case 2 is relatively rotated to the fixed case 3 by times corresponding to the length of a flat cable 5. In the rotary connector 1 thereby assembled, an upper flange 2b and a lower flange 2c are integrally formed with an upper and a lower parts of an inner cylinder 2a in the bobbin winding condition. In the rotary connector 1, with looseness and fastening of the winding, a side edge of the flat cable 5 slides on the lower flange 2c of the rotary case 2 so as to generate the sliding noise, but ratio of transmission of this sliding noise to the fixed case 3 is reduced.

COPYRIGHT: (C)1999,JPO

(19)日本国特許庁（ＪＰ）　(12) 公開特許公報（Ａ）　(11)特許出願公開番号

特開平11－87006

(43)公開日　平成11年(1999)３月30日

(51)Int.Cl.⁶	識別記号	ＦＩ	
Ｈ０１Ｒ　35/04		Ｈ０１Ｒ　35/04	Ｆ
Ｂ６０Ｒ　16/02	６７５	Ｂ６０Ｒ　16/02	６７５Ｓ
Ｂ６２Ｄ　1/04		Ｂ６２Ｄ　1/04	

審査請求　未請求　請求項の数５　ＯＬ　（全　７　頁）

(21)出願番号　特願平9－242870

(22)出願日　平成９年(1997)９月８日

(71)出願人　000005290
古河電気工業株式会社
東京都千代田区丸の内２丁目６番１号

(72)発明者　向井　康彦
東京都千代田区丸の内２丁目６番１号　古河電気工業株式会社内

(72)発明者　上野　静一
東京都千代田区丸の内２丁目６番１号　古河電気工業株式会社内

(74)代理人　弁理士　長門　侃二

(54)【発明の名称】　回転コネクタ

(57)【要約】

【課題】　防音シートや制振板等の消音対策部品を可能な限り削減してコストダウンが可能な回転コネクタを提供する。

【解決手段】　相対回転自在に組み付けられ、内部に環状の空間Ｓが形成される固定ケース３と回転ケース２の空間内に、可撓性を有する帯状伝送線５が渦巻状に巻回して収容される回転コネクタ１。回転ケース２は、内筒２ａの上下に半径方向外側に延出する上フランジ２ｂと下フランジ２ｃとが一体に形成されている。

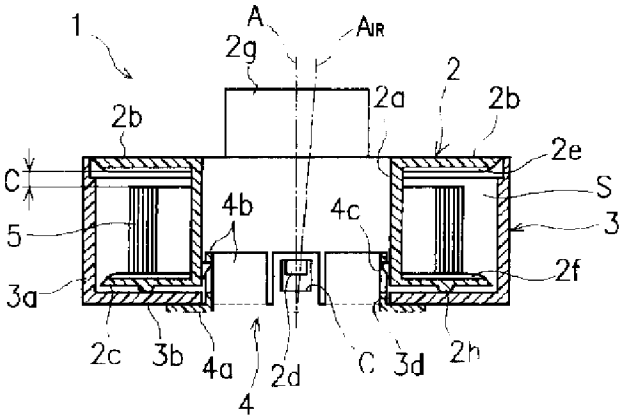

1

【特許請求の範囲】

【請求項１】　相対回転自在に組み付けられ、内部に環状の空間が形成される固定ケースと回転ケースの前記空間内に、可撓性を有する帯状伝送線が渦巻状に巻回して収容される回転コネクタにおいて、

前記回転ケースは、内筒の上下に半径方向外側に延出する上フランジと下フランジとが一体に形成されたことを特徴とする回転コネクタ。

【請求項２】　前記回転ケースは、前記下フランジの前記固定ケースと対向する下面に周方向に第１の突部が形成されている、請求項１の回転コネクタ。

【請求項３】　前記回転ケースは、前記上フランジの下面に半径方向に第２の突部が形成されている、請求項１の回転コネクタ。

【請求項４】　前記回転ケースは、前記下フランジの上面に半径方向に第３の突部が形成されている、請求項１の回転コネクタ。

【請求項５】　前記回転ケースは、前記上フランジと下フランジの少なくとも一方の外周縁の厚さが、前記帯状伝送線と対向する側から外面側に向かって薄くなるように形成されている、請求項１の回転コネクタ。

【発明の詳細な説明】

【０００１】

【発明の属する技術分野】本発明は、回転コネクタに関する。

【０００２】

【従来の技術】相対回転する２つの部材間を接続し、電気信号や光信号を伝送する際に使用される回転コネクタは、固定ケースと回転ケースとが互いに相対回転自在に組み付けられ、両ケースの内部に形成される環状の空間内に、フラットケーブルと呼ばれる可撓性を有する帯状伝送線が渦巻状に巻回して収容され、例えば、実開平１－１４７３６３号公報等で公知である。

【０００３】回転コネクタは、例えば、自動車のエアバッグ装置を作動させるために使用され、回転ケースの中央にステアリングシャフトを貫通させ、ステアリングの回転操作に従って回転ケースがステアリングシャフトと共に回転する。一方、固定ケースは、車体側のコンビネーションスイッチに固定される。そして、回転コネクタは、ステアリング操作に従うフラットケーブルの巻き締まりや巻き緩みにより、両ケースの所定回数の相対回転が可能となる。

【０００４】このとき、回転コネクタは、固定ケースに防音シートが、制振板が回転ケースにそれぞれ取り付けられる。防音シートは、固定ケースのフラットケーブルの側縁と接する面に取り付けられる合成樹脂製のシートで、ステアリング操作に伴う巻き締まりや巻き緩みにより、フラットケーブルの側縁と固定ケースとが摺れ合って発生する摺動音や悪路走行時におけるフラットケーブルの鉛直方向の振動に起因するいわゆる踊り音を低減する。

2

【０００５】一方、制振板は、回転ケースのフラットケーブルの側縁と対向する面に取り付けられる板で、回転ケース上面とフラットケーブルの側縁との間のクリアランスを小さく抑えることにより、フラットケーブルの鉛直方向の振動に起因する前記踊り音を抑制する。

【０００６】

【発明が解決しようとする課題】ところで、回転コネクタは、上記のように摺動音や踊り音の低減を目的として消音対策部品としての防音シートや制振板が設けられている。このため、回転コネクタは、これらの消音対策部品を設ける分だけ、組み立てに手数がかかるうえ、コスト高になるという問題がある。

【０００７】本発明は上記の点に鑑みてなされたもので、防音シートや制振板等の消音対策部品を可能な限り削減してコストダウンが可能な回転コネクタを提供することを目的とする。

【０００８】

【課題を解決するための手段】本発明においては上記目的を達成するため、相対回転自在に組み付けられ、内部に環状の空間が形成される固定ケースと回転ケースの前記空間内に、可撓性を有する帯状伝送線が渦巻状に巻回して収容される回転コネクタにおいて、前記回転ケースを、内筒の上下に半径方向外側に延出する上フランジと下フランジとが一体に成形された構成としたのである。

【０００９】好ましくは、前記回転ケースは、前記下フランジの前記固定ケースと対向する下面に周方向に第１の突部を形成する。また好ましくは、前記回転ケースは、前記上フランジの下面に半径方向に第２の突部を形成する。更に好ましくは、前記回転ケースは、前記下フランジの上面に半径方向に第３の突部を形成する。

【００１０】好ましくは、前記回転ケースは、前記上フランジと下フランジの少なくとも一方の外周縁の厚さを、前記帯状伝送線と対向する側から外面側に向かって薄くなるように形成する。

【００１１】

【作用】回転コネクタは、回転ケースが内筒の上下に半径方向外側に延出する上フランジと下フランジとを一体に成形した糸巻き状に成形されているので、帯状伝送線は回転ケースの上下のフランジ間に配置されて摺動音や踊り音が低減される。

【００１２】

【発明の実施の形態】以下、本発明の一実施形態を図１乃至図１２に基づいて詳細に説明する。先ず、本発明の回転コネクタの第１の実施形態を図１乃至図６に基づいて説明する。回転コネクタ１は、図１及び図２に示すように、回転ケース２，固定ケース３，スリーブ４及びフラットケーブル５を有している。

【００１３】回転ケース２は、図２及び図３に示すように、糸巻き状に成形され、固定ケース３の内側に配置さ

れる。回転ケース２は、内筒２ａの上下に半径方向外方へ延出する上フランジ２ｂと下フランジ２ｃとが一体に成形されている。内筒２ａは、図３に示すように、内周下部に係止突起２ｄが周方向に複数形成されている。上フランジ２ｂ及び下フランジ２ｃは、互いに対向する内面に半径方向に放射状に延びる突部２ｅ，２ｆが形成され、外周縁の厚さが、収容されるフラットケーブル５と対向する側から外面側に向かって薄くなるように円弧状に形成されている。このとき、突部２ｅ，２ｆは、フラットケーブル５の図２における上下方向の振動を抑制し、突部２ｅとフラットケーブル５の側縁との間のクリアランスＣを考慮し、予め高さが所定値となるように設定されている。また、上フランジ２ｂは、図１及び図２に示したように、上面に外部電線を接続する接続ポスト２ｇが上方へ突出させて形成されている。一方、下フランジ２ｃは、固定ケース３の後述する下フランジ３ｂと対向する下面に突起２ｈが周方向に形成されている。ここで、上フランジ２ｂ及び下フランジ２ｃの外周縁は、収容されるフラットケーブル５と対向する側から外面側に向かって薄くなるように形成されていれば、円弧状に形成されていることに限定されるものではなく、例えば、外方に向かってテーパ状に成形されていてもよい。

【００１４】固定ケース３は、回転ケース２と相対回転自在に組み付けられ、内部にフラットケーブル５を収容する環状の空間Ｓ（図２参照）を形成する。固定ケース３は、図２に示すように、外筒３ａの下部に半径方向内方へ延出するドフランジ３ｂが一体に形成され、側面には下方が開放した係止部３ｃが半径方向外方に向けて張り出すように形成されている。係止部３ｃは、フラットケーブル５の後述する外端が係止される。下フランジ３ｂは、中央に開口３ｄが形成されている。ここで、符号３ｅは、固定ケース３を車体側に固定する固定ベースである。

【００１５】スリーブ４は、固定ケース３の下側から取り付けて回転ケース２に係止される部材で、図２及び図５に示すように、中央に開口が形成された円板４ａの内周縁から上方へ立ち上がる複数の内筒片４ｂを有している。複数の内筒片４ｂは、回転ケース２の係止突起２ｄと対応する位置に係止孔４ｃが設けられている。フラットケーブル５は、平行に配置された平角状の複数の電気導体をポリエステル等の絶縁体で被覆した可撓性を有する伝送線で、両ケース２，３によって形成される環状の空間Ｓに渦巻き状に巻回して収容される。フラットケーブル５は、渦巻き状に巻回した内端と外端において前記電気導体が接続端子５ａ（図１参照）と接続され、これらの接続端子を突出させて樹脂でモールドされている。ここで、フラットケーブル５は、電気導体の他に光ファイバあるいはこれらを組み合わせたものであってもよいことは言うまでもない。

【００１６】回転コネクタ１は、以上のように構成され、以下のようにして組み立てられる。先ず、渦巻き状に巻回したフラットケーブル５の内端を接続ポスト２ｇの位置で回転ケース２に取り付けると共に、外端を固定ケース３の係止部３ｃに係止する。

【００１７】次に、この状態で固定ケース３の内側に回転ケース２を組み付ける。次いで、固定ケース３の下側からスリーブ４を取り付けて回転ケース２に係止させ、回転コネクタ１の組み立てが終了する。これにより、回転コネクタ１は、回転ケース２の係止突起２ｄが、スリーブ４の対応する係止孔４ｃに係合し、回転ケース２と固定ケース３とが外れることなく相対回転自在に組み付けられ、フラットケーブル５の長さに応じた回数だけ回転ケース２が固定ケース３に対して相対回転する。このとき、フラットケーブル５は、回転ケース２が固定ケース３に対して巻き締まり方向と巻き緩み方向の左右方向に等しく回転するように、中間状態に調整して両ケースの回転を規制部材等によって規制する。

【００１８】このようにして組み立てられた回転コネクタ１は、内筒２ａの上下に上フランジ２ｂと下フランジ２ｃとが一体に形成されて糸巻き状に成形されている。従って、回転コネクタ１は、ステアリング装置に取り付けて使用したとき、巻き緩んだり巻き締まったりするのに伴って、フラットケーブル５の側縁が回転ケース２の下フランジ２ｃ上を摺動して摺動音が発生するが、この摺動音が固定ケース３側に伝わる割合が減少するので、従来の回転コネクタのように防音シートを固定ケースに取り付ける必要がない。

【００１９】また、回転ケース２は、上フランジ２ｂ及び下フランジ２ｃのそれぞれに放射状に延び、フランジ内面よりも僅かに高い突部２ｅ，２ｆが形成されている。このため、回転ケース２は、仮に従来の回転ケースのように成形に伴うパーティングラインがフランジ面に発生しても、フラットケーブル５の側縁は下フランジ２ｃの複数の突部２ｆ上を摺動してパーティングラインと触れ合うことがない。従って、フラットケーブル５は、回転ケース２によって円滑な巻き締まりと巻き緩みの作動が実現され、下フランジ２ｃの上面全体とフラットケーブル５の側縁全体とが接することがないので、摺動音も低減される。

【００２０】更に、回転ケース２は、上フランジ２ｂ及び下フランジ２ｃの外周縁が、フラットケーブル５と対向する側から外面側に向かって薄くなるように形成されている。従って、回転コネクタ１は、回転ケース２が回転してフラットケーブル５が巻き緩んでも、外周縁側で上フランジ２ｂや下フランジ２ｃがフラットケーブル５の側縁と接することがなく、これらの干渉に起因した摺動音の発生を防止することができる。

【００２１】特に、回転コネクタ１は、図２に示すように、ステアリングシャフトを通じて回転軸がＡからＡＩＲに変化するような外力が作用しても、回転ケース２の下

フランジ２ｃの外周縁が固定ケース３の下フランジ３ｂ上面に当接して外力に対して抵抗力を生み出す。このため、回転コネクタ１は、回転ケース２に回転軸が傾斜するような外力が作用しても、フラットケーブル５の前記摺動音が増大することはない。

【００２２】しかも、回転ケース２は、上フランジ２ｂと下フランジ２ｃに突部２ｅ，２ｆが一体に形成されている。このため、回転コネクタ１においては、図２に示すフラットケーブル５と上フランジ２ｂとの間のクリアランスＣを高精度に安定させることができ、フラットケーブル５の上下方向の振動を抑えて、この振動に起因する踊り音を小さくすることができ、制振板を設ける必要がない。

【００２３】一方、回転コネクタ１は、回転ケース２の下フランジ２ｃに突起２ｈが周方向に形成されている。このため、回転コネクタ１は、回転ケース２と固定ケース３とが突起２ｈによって線接触した状態で相対回転するので、回転トルクを小さくすることができるうえ、回転ケース２と固定ケース３との相対回転に伴う摺動音も小さくすることができる。

【００２４】ここで、固定ケース３は、図６に示すように、外筒３ａの上部に半径方向内方へ延出するひさし部３ｆを設けても良い。この場合、ひさし部３ｆは、外筒３ａの上部に一体に形成してもよく、あるいは固定ケース３を成形後、ひさし部３ｆを熱溶着によって取り付けてもよい。次に、本発明の回転コネクタの第２の実施形態を図７乃至図１１に基づいて説明する。

【００２５】回転コネクタ１０は、回転ケース１１，固定ケース１２及びフラットケーブル１３を有している。回転ケース１１は、図８及び図９に示すように、糸巻き状に成形され、固定ケース１２の内側に配置される。回転ケース１１は、内筒１１ａの上下に半径方向外方へ延出する上フランジ１１ｂと下フランジ１１ｃとが一体に成形されている。内筒１１ａは、図８に示すように、下部内周に係止部１１ｄが形成されている。係止部１１ｄには、係止孔１１ｅと係止突起１１ｆが形成されている。上フランジ１１ｂ及び下フランジ１１ｃは、互いに対向する内面に半径方向に放射状に延びる突部１１ｇ，１１ｈが形成され、外周縁の厚さが、収容されるフラットケーブル１３と対向する側から外面側に向かって薄くなるように円弧状に形成されている。このとき、突部１１ｇ，１１ｈは、フラットケーブル１３の図８における上下方向の振動を抑制し、突部１１ｇとフラットケーブル１３の側縁との間のクリアランスＣを考慮し、予め高さが所定値となるように設定されている。また、上フランジ１１ｂは、図７及び図８に示したように、上面に外部電線を接続する接続ポスト１１ｊが上方へ突出させて形成されている。一方、下フランジ１１ｃは、固定ケース１２の後述する下フランジ１２ｂと対向する下面に突起１１ｋが周方向に形成されている。ここで、上フランジ１１ｂ及び下フランジ１１ｃの外周縁は、収容されるフラットケーブル１３と対向する側から外面側に向かって薄くなるように形成されていれば、円弧状に形成されていることに限定されるものではなく、例えば、外方に向かってテーパ状に成形されていてもよい。

【００２６】固定ケース１２は、回転ケース１１と相対回転自在に組み付けられ、内部にフラットケーブル１３を収容する環状の空間Ｓ（図８参照）を形成する。固定ケース１２は、図８に示すように、外筒１２ａの下部に半径方向内方へ延出する下フランジ１２ｂが一体に形成され、側面には下方が開放した係止部１２ｃが半径方向外方に向けて張り出すように形成されている。係止部１２ｃは、フラットケーブル１３の後述する外端が係止される。下フランジ１２ｂは、中央に開口１２ｄが形成されている。固定ケース１２は、固定ベース１２ｅによって車体側に固定される。また、下フランジ１２ｂには、内縁から上方に立ち上がる複数の挿通片１２ｆが設けられている。

【００２７】フラットケーブル１３は、第１の実施形態のフラットケーブル５と同様に構成された可撓性を有する伝送線で、両ケース１１，１２によって形成される環状の空間Ｓに渦巻き状に巻回して収容される。フラットケーブル１３は、渦巻き状に巻回した内端と外端において前記電気導体が接続端子１３ａ（図７参照）と接続され、これらの接続端子を突出させて樹脂でモールドされている。ここで、フラットケーブル１３は、電気導体の他に光ファイバあるいはこれらを組み合わせたものであってもよいことは言うまでもない。

【００２８】回転コネクタ１０は、以上のように構成され、以下のようにして組み立てられる。先ず、渦巻き状に巻回したフラットケーブル１３の内端を接続ポスト１１ｊの位置で回転ケース１１に取り付けると共に、外端を固定ケース１２の係止部１２ｃに係止する。

【００２９】次に、この状態で各挿通片１２ｆを対応する係止孔１１ｅに挿通させ、固定ケース１２の内側に回転ケース１１を組み付けて、回転コネクタ１０の組み立てが終了する。このとき、回転コネクタ１０は、両ケース１１，１２を組み付けると、回転ケース１１の係止突起１１ｆが、図８に示すように、固定ケース１２の開口１２ｄの周縁に係止され、回転ケース１１と固定ケース１２とが相対回転自在に組み付けられ、フラットケーブル１３の長さに応じた回数だけ回転ケース１１が固定ケース１２に対して相対回転する。

【００３０】また、フラットケーブル１３は、回転ケース１１が固定ケース１２に対して巻き締まり方向と巻き緩み方向の左右方向に等しく回転するように、中間状態に調整して両ケースの回転を規制部材等によって規制しておく。このようにして組み立てられた回転コネクタ１０は、第１の実施形態と同様の効果を発揮することができる。

【００３１】特に、本実施形態の回転コネクタ１０は、ステアリング装置に取り付けて使用したとき、フラットケーブル１３の巻き緩みや巻き締まりに伴って、フラットケーブル１３の側縁が回転ケース１１の下フランジ１１ｃ上を摺動して摺動音が発生するが、この摺動音が固定ケース１２側に伝わる割合が減少するので、従来の回転コネクタのように防音シートを固定ケースに取り付ける必要がない。

【００３２】また、回転ケース１１は、上フランジ１１ｂと下フランジ１１ｃに突部１１ｇ、１１ｈが一体に形成されている。このため、回転ケース１０は、図８に示すフラットケーブル１３と上フランジ１１ｂとの間のクリアランスＣを高精度に安定させることができ、フラットケーブル１３の上下方向の振動を抑えて、この振動に起因する鳴り音を小さくすることができ、制振板を設ける必要がない。

【００３３】ここで、固定ケース１２は、図１１に示すように、外筒１２ａの上部に半径方向内方へ延出するひさし部１２ｇを設けても良い。この場合、ひさし部１２ｇは、外筒１２ａの上部に一体に形成してもよく、あるいは固定ケース１２を成形後、ひさし部１２ｇを熱溶着によって取り付けてもよい。また、本発明の回転コネクタは、図１２に示す回転コネクタ２０のように、構成してもよいことはいうまでもない。

【００３４】即ち、回転コネクタ２０は、回転ケース２１，固定ケース２２及びフラットケーブル２３を有し、回転ケース２１と固定ケース２２とが相対回転自在に組み付けられる。このとき、回転ケース２１は、内筒２１ａの上下に上フランジ２１ｂと下フランジ２１ｃとが形成された糸巻き状に成形する。一方、固定ケース２２は、図１２に示すように円筒状に成形し、上下の内縁に回転ケース２１の上フランジ２１ｂと下フランジ２１ｃの外周縁が係合する段部２２ａ，２２ｂを形成する。

【００３５】回転コネクタ２０は、以上のように構成すると、回転ケース２１が糸巻き状に成形されているので、上下のフランジ２１ｂ，２１ｃ間が一定に保持されると共に、回転軸が傾斜する方向の外力が作用しても、フランジ２１ｂ，２１ｃの外周縁が固定ケース２２の段部２２ａ，２２ｂに当接して外力に対して抵抗力を生み出し、フラットケーブル２３の側縁が上フランジ２１ｂや下フランジ２１ｃに接することが抑制され、防音シートを設ける必要がない。また、回転コネクタ２０は、上下のフランジ２１ｂ，２１ｃ間が一定に保持されることから、フラットケーブル２３の側縁と上フランジ２１ｂとの間のクリアランスが予め設定された値に保持されるので、制振板を設ける必要もない。

【００３６】

【発明の効果】請求項１の発明によれば、回転ケースが内筒の上下に半径方向外側に延出する上フランジと下フランジとを一体に成形した糸巻き状に成形されているので、帯状伝送線は回転ケースの上下のフランジ間に配置されて摺動音や鳴り音が低減され、防音シートや制振板等の消音対策部品を削減してコストダウンが可能な回転コネクタを提供することができる。

【００３７】請求項２の発明によれば、第１の突部によって回転ケースと固定ケースとが線接触した状態で相対回転するので、回転コネクタの回転トルクを小さくすることができるうえ、回転ケースと固定ケースとの相対回転に伴う摺動音も小さくすることができる。請求項３，４の発明によれば、帯状伝送線が回転ケースのフランジと第２及び第３の突部のみで接触するので、摺動音が低減され、防音シートを設ける必要がない。また、回転コネクタは、第２及び第３の突部により帯状伝送線と回転ケースの上フランジとの間のクリアランスを高精度に安定させることができるので、帯状伝送線の上下方向の振動を一層抑制することができる。

【００３８】請求項５の発明によれば、回転ケースが回転して帯状伝送線が巻き緩んでも、外周縁側で上フランジや下フランジが帯状伝送線の側縁と接することがなく、これらの干渉に起因した摺動音の発生を防止した回転コネクタとすることができる。

【図面の簡単な説明】

【図１】本発明の回転コネクタの第１の実施形態を示す平面図である。

【図２】図１の回転コネクタのII－II線に沿った断面図である。

【図３】図１の回転コネクタを構成する回転ケースの一部を破断した斜視図である。

【図４】図１の回転コネクタを構成する固定ケースの一部を破断した斜視図である。

【図５】図１の回転コネクタを構成するスリーブの一部を破断した斜視図である。

【図６】図１の回転コネクタを構成する固定ケースの変形例を示すもので、固定ケースの一部を破断した斜視図である。

【図７】本発明の回転コネクタの第２の実施形態を示す平面図である。

【図８】図７の回転コネクタのVIII－VIII線に沿った断面図である。

【図９】図７の回転コネクタを構成する回転ケースの一部を破断した斜視図である。

【図１０】図７の回転コネクタを構成する固定ケースの一部を破断した斜視図である。

【図１１】図７の回転コネクタを構成する固定ケースの変形例を示すもので、固定ケースの一部を破断した斜視図である。

【図１２】本発明の回転コネクタの第３の実施形態を示す断面図である。

【符号の説明】

１　回転コネクタ

２	回転ケース
２ａ	内筒
２ｂ	上フランジ
２ｃ	下フランジ
２ｄ	係止突起
２ｅ	突部（第２の突部）
２ｆ	突部（第３の突部）
２ｈ	突起（第１の突部）
３	固定ケース
３ａ	外筒
３ｂ	下フランジ
４	スリーブ
４ａ	円板
４ｂ	内筒片
４ｃ	係止孔
５	フラットケーブル
５ａ	接続端子
１０	回転コネクタ
１１	回転ケース
１１ａ	内筒
１１ｂ	上フランジ
１１ｃ	下フランジ
１１ｇ	突部（第２の突部）
１１ｈ	突部（第３の突部）
１１ｋ	突起（第１の突部）
１２	固定ケース
１３	フラットケーブル
２０	回転コネクタ
２１	回転ケース
２１ａ	内筒
２１ｂ	上フランジ
２１ｃ	下フランジ
２２	固定ケース
２２ａ，２２ｂ	段部
２３	フラットケーブル
Ａ，AIR	回転軸
Ｓ	環状の空間

【図１】

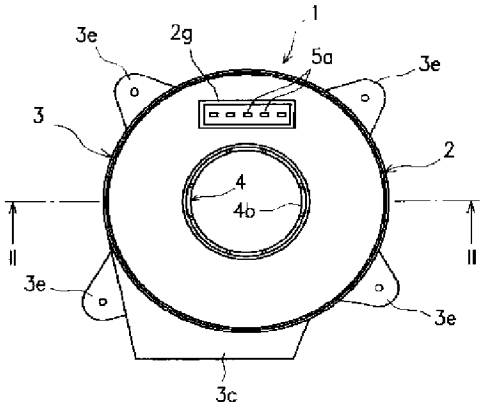

【図２】

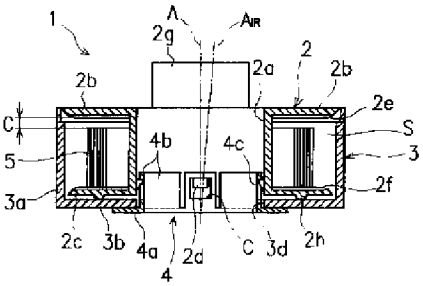

【図５】

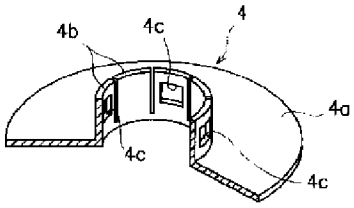

【図３】

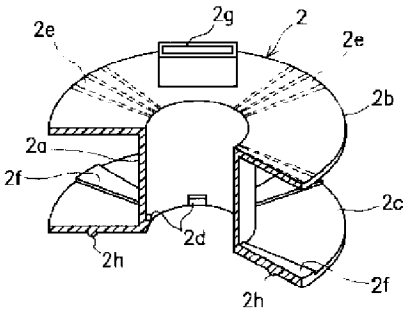

【図４】

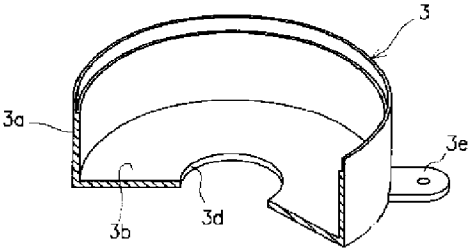

【図８】

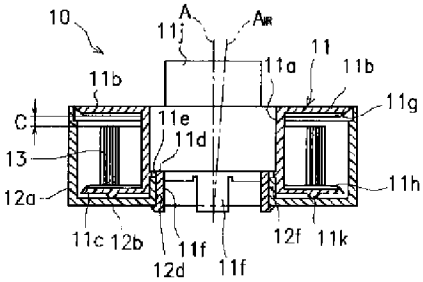

【図６】

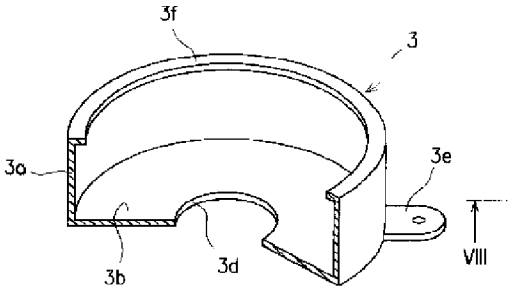

【図７】

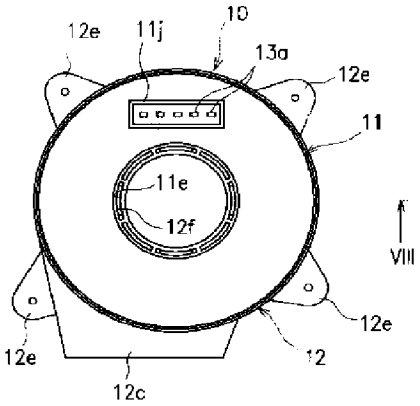

【図９】

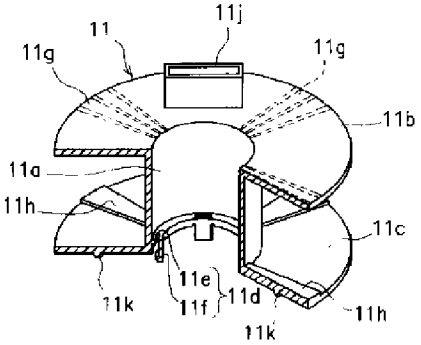

【図１０】

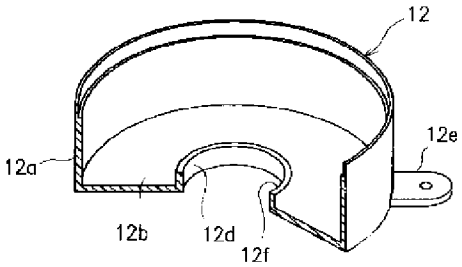

【図１２】

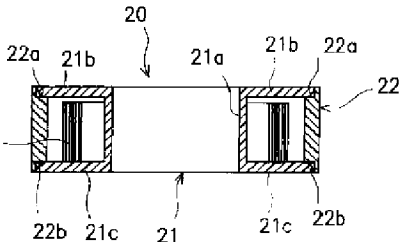

【図１１】

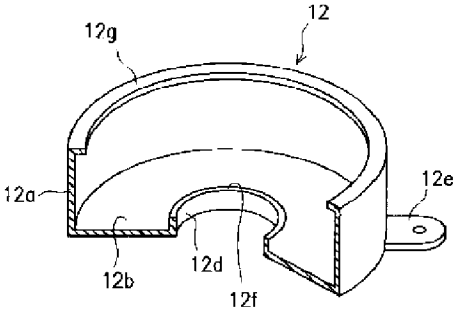

Electronic Acknowledgement Receipt

EFS ID:	33831410
Application Number:	15875605
International Application Number:	
Confirmation Number:	4897
Title of Invention:	FIBER OPTIC ENCLOSURE WITH INTERNAL CABLE SPOOL
First Named Inventor/Applicant Name:	Scott C. Kowalczyk
Customer Number:	142510
Filer:	Julie Katherine Skoge/Kris Wacek
Filer Authorized By:	Julie Katherine Skoge
Attorney Docket Number:	02316.2584US23/ADC003176
Receipt Date:	26-SEP-2018
Filing Date:	19-JAN-2018
Time Stamp:	12:15:38
Application Type:	Utility under 35 USC 111(a)

Payment information:

Submitted with Payment	no

File Listing:

Document Number	Document Description	File Name	File Size(Bytes)/ Message Digest	Multi Part /.zip	Pages (if appl.)
1	Transmittal Letter	2018-09-26-IDS-2-02316-2584US23.PDF	99833 650448c2ff31121ad8dd709531851be3b181e815	no	2

Warnings:

Information:					
2	Information Disclosure Statement (IDS) Form (SB08)	2018-09-26-1449-2-02316-2584US23.PDF	133983 c8d8cd5f13c1ab8d147465760fc59aa842b68814	no	4
Warnings:					
Information:					
This is not an USPTO supplied IDS fillable form					
3	Foreign Reference	JP1-123203A-w-Eng-Abs.PDF	257308 5885a02fea709b70340c061440e6427091c3ed90	no	7
Warnings:					
Information:					
4	Foreign Reference	JP11-87006A-w-Eng-Abs.PDF	509834 2633c6d04ac3da6125315cacba3f72cc0c3443e7	no	8
Warnings:					
Information:					
5	Non Patent Literature	Defendant-Clearfield-Revised-Preliminary-Invalidity-Claim-Charts-12-11-2017.PDF	804861 b7950e95c12f0bbee76c2ea935fb7fab14684949	no	51
Warnings:					
Information:					
6	Non Patent Literature	Defendant-Clearfield-Revised-Invalidity-Claim-Chart-Exhibit-10.PDF	1456810 c7063ef09c8b2b206413fccaaafa27a97b179601	no	38
Warnings:					
Information:					
7	Non Patent Literature	Defendant-Clearfield-Revised-Invalidity-Claim-Chart-Exhibit-11.PDF	2949490 de588f8c05e62a0ff361399e376229f9114ac671	no	39
Warnings:					
Information:					
8	Non Patent Literature	Defendant-Clearfield-Revised-Invalidity-Claim-Chart-Table-D.PDF	149330 e23f839f0e0fc5c2ed953b3ccc084185c8b2a470	no	7
Warnings:					
Information:					

9	Non Patent Literature	Defendant-Clearfield-Revised-Invalidity-Claim-Chart-Table-E.PDF	123615 d38bcb8f55a87ca9399efbe31ba2974e6d284a48	no	6
Warnings:					
Information:					
10	Non Patent Literature	Defendant-Clearfield-Second-Revised-Preliminary-Invalidity-01-12-2018.PDF	1281745 630ab44942b6b928c326d9a76a6c7a652cc89bad	no	65
Warnings:					
Information:					
11	Non Patent Literature	Ex-10-to-Second-Revised-Preliminary-Invalidity.PDF	1471683 7a6e0a90ddf2c18ca7bf27a464779dcf86b27dab	no	43
Warnings:					
Information:					
12	Non Patent Literature	Ex-11-to-Second-Revised-Preliminary-Invalidity.PDF	1538233 4ad01cbc3c43fb950f4e4f91a63eb12da335e072	no	47
Warnings:					
Information:					
13	Non Patent Literature	CommScope-Resp-to-2nd-Revised-Invalidity-01-19-2018.PDF	359607 97b61f0538881adafbc07cdfa06b046e8303a86c	no	105
Warnings:					
Information:					
14	Non Patent Literature	Exhibit-J-to-Second-Revised-Preliminary-Invalidity.PDF	192574 4f92ead4114d005030187dd36b81dc2d80d610c0	no	21
Warnings:					
Information:					
15	Non Patent Literature	Exhibit-K-to-Second-Revised-Preliminary-Invalidity.PDF	179482 58b23019457760d949d52017e6d92dd187f970c6	no	19
Warnings:					
Information:					

16	Non Patent Literature	Joint-Status-Report-Dated-02-09-2018.PDF	194613 f479e61332b06684b12f49808ae22d66a14e5a75	no	11
Warnings:					
Information:					
17	Non Patent Literature	Joint-Status-Report-Exhibit-A.PDF	194494 7c30041392d4b26b6c40a2a5e60ddda666dbbbcb	no	33
Warnings:					
Information:					
18	Non Patent Literature	Joint-Status-Report-Exhibit-B.PDF	285062 97a07a529b9b3eff7c4ad4538296408d4af6cc78	no	21
Warnings:					
Information:					
19	Non Patent Literature	Stipulation-of-Dismissal-dated-02-19-2018.PDF	135724 1b1adb0df0bc7cf3f8fcf121726031ee8fa487a6	no	2
Warnings:					
Information:					
20	Non Patent Literature	Order-of-Dismissal-dated-02-20-2018.PDF	77222 de74e872a46181b1b01715ba2b89ae6152e59b97	no	1
Warnings:					
Information:					
			Total Files Size (in bytes):	12395503	

This Acknowledgement Receipt evidences receipt on the noted date by the USPTO of the indicated documents, characterized by the applicant, and including page counts, where applicable. It serves as evidence of receipt similar to a Post Card, as described in MPEP 503.

New Applications Under 35 U.S.C. 111
If a new application is being filed and the application includes the necessary components for a filing date (see 37 CFR 1.53(b)-(d) and MPEP 506), a Filing Receipt (37 CFR 1.54) will be issued in due course and the date shown on this Acknowledgement Receipt will establish the filing date of the application.
National Stage of an International Application under 35 U.S.C. 371
If a timely submission to enter the national stage of an international application is compliant with the conditions of 35 U.S.C. 371 and other applicable requirements a Form PCT/DO/EO/903 indicating acceptance of the application as a national stage submission under 35 U.S.C. 371 will be issued in addition to the Filing Receipt, in due course.
New International Application Filed with the USPTO as a Receiving Office
If a new international application is being filed and the international application includes the necessary components for an international filing date (see PCT Article 11 and MPEP 1810), a Notification of the International Application Number and of the International Filing Date (Form PCT/RO/105) will be issued in due course, subject to prescriptions concerning national security, and the date shown on this Acknowledgement Receipt will establish the international filing date of the application.

IN THE UNITED STATES PATENT AND TRADEMARK OFFICE

Inventor:	KOWALCZYK ET AL.	Examiner:	ULLAH, AKM E.
Serial No.:	15/875,605	Group Art Unit:	2874
Filed:	JANUARY 19, 2018	Docket No.:	02316.2584US23/ADC003176
Title:	FIBER OPTIC ENCLOSURE WITH INTERNAL CABLE SPOOL		

Filed via EFS-Web

INFORMATION DISCLOSURE STATEMENT (37 C.F.R. § 1.97(b))

Commissioner for Patents
P.O. Box 1450
Alexandria, Virginia 22313-1450

142510
PATENT TRADEMARK OFFICE

Attention: Commissioner for Patents

With regard to the above-identified application, the items of information listed on the enclosed Form 1449 are brought to the attention of the Examiner.

This statement should be considered because it is submitted before the mailing date of a first Office Action on-the-merits. Accordingly, no fee is due for consideration of the items listed on the enclosed Form 1449.

In accordance with 37 C.F.R. §1.98(a)(2), a copy of each foreign patent and/or a copy of each publication, other than U.S. patents and U.S. patent application publications, listed on the accompanying Form 1449 is enclosed.

No representation is made that a reference is "prior art" within the meaning of 35 U.S.C. §§ 102 and 103 and Applicants reserve the right, pursuant to 37 C.F.R. § 1.131 or otherwise, to establish that the reference(s) are not "prior art."

Consideration of the items listed is respectfully requested. Pursuant to the provisions of M.P.E.P. 609, it is requested that the Examiner return a copy of the attached Form 1449, marked as being considered and initialed by the Examiner, to the undersigned with the next official communication.

Please charge any additional fees or credit any overpayment to Deposit Account No. 13-2725.

Respectfully submitted,

MERCHANT & GOULD P.C.
P.O. Box 2903
Minneapolis, Minnesota 55402-0903
(612) 332-5300

Date: September 26, 2018

/Julie K. Skoge/
Julie K. Skoge
Reg. No. 63,431
JKS:PLSkaw

UNITED STATES PATENT AND TRADEMARK OFFICE

UNITED STATES DEPARTMENT OF COMMERCE
United States Patent and Trademark Office
Address: COMMISSIONER FOR PATENTS
P.O. Box 1450
Alexandria, Virginia 22313-1450
www.uspto.gov

APPLICATION NUMBER	FILING OR 371(C) DATE	FIRST NAMED APPLICANT	ATTY. DOCKET NO./TITLE
15/875,605	01/19/2018	Scott C. Kowalczyk	02316.2584US23/ ADC003176

CONFIRMATION NO. 4897

142510
M&G CommScope
P.O. Box 2903
Minneapolis, MN 55402

PUBLICATION NOTICE

OC000000099790217

Title:FIBER OPTIC ENCLOSURE WITH INTERNAL CABLE SPOOL

Publication No.US-2018-0143390-A1
Publication Date:05/24/2018

NOTICE OF PUBLICATION OF APPLICATION

The above-identified application will be electronically published as a patent application publication pursuant to 37 CFR 1.211, et seq. The patent application publication number and publication date are set forth above.

The publication may be accessed through the USPTO's publically available Searchable Databases via the Internet at www.uspto.gov. The direct link to access the publication is currently http://www.uspto.gov/patft/.

The publication process established by the Office does not provide for mailing a copy of the publication to applicant. A copy of the publication may be obtained from the Office upon payment of the appropriate fee set forth in 37 CFR 1.19(a)(1). Orders for copies of patent application publications are handled by the USPTO's Public Records Division. The Public Records Division can be reached by telephone at (571) 272-3150 or (800) 972-6382, by facsimile at (571) 273-3250, by mail addressed to the United States Patent and Trademark Office, Public Records Division, Alexandria, VA 22313-1450 or via the Internet.

In addition, information on the status of the application, including the mailing date of Office actions and the dates of receipt of correspondence filed in the Office, may also be accessed via the Internet through the Patent Electronic Business Center at www.uspto.gov using the public side of the Patent Application Information and Retrieval (PAIR) system. The direct link to access this status information is currently https://portal.uspto.gov/pair/PublicPair. Prior to publication, such status information is confidential and may only be obtained by applicant using the private side of PAIR.

Further assistance in electronically accessing the publication, or about PAIR, is available by calling the Patent Electronic Business Center at 1-866-217-9197.

Office of Data Managment, Application Assistance Unit (571) 272-4000, or (571) 272-4200, or 1-888-786-0101

PATENT APPLICATION FEE DETERMINATION RECORD Substitute for Form PTO-875	Application or Docket Number 15/875,605

APPLICATION AS FILED - PART I

FOR	(Column 1) NUMBER FILED	(Column 2) NUMBER EXTRA	SMALL ENTITY RATE($)	SMALL ENTITY FEE($)	OR	OTHER THAN SMALL ENTITY RATE($)	OTHER THAN SMALL ENTITY FEE($)
BASIC FEE (37 CFR 1.16(a), (b), or (c))	N/A	N/A	N/A			N/A	300
SEARCH FEE (37 CFR 1.16(k), (i), or (m))	N/A	N/A	N/A			N/A	660
EXAMINATION FEE (37 CFR 1.16(o), (p), or (q))	N/A	N/A	N/A			N/A	760
TOTAL CLAIMS (37 CFR 1.16(i))	24 minus 20 =	* 4			OR	x 100 =	400
INDEPENDENT CLAIMS (37 CFR 1.16(h))	2 minus 3 =	*				x 460 =	0.00
APPLICATION SIZE FEE (37 CFR 1.16(s))	If the specification and drawings exceed 100 sheets of paper, the application size fee due is $310 ($155 for small entity) for each additional 50 sheets or fraction thereof. See 35 U.S.C. 41(a)(1)(G) and 37 CFR 1.16(s).						0.00
MULTIPLE DEPENDENT CLAIM PRESENT (37 CFR 1.16(j))							0.00
* If the difference in column 1 is less than zero, enter "0" in column 2.			TOTAL			TOTAL	2120

APPLICATION AS AMENDED - PART II

		(Column 1) CLAIMS REMAINING AFTER AMENDMENT		(Column 2) HIGHEST NUMBER PREVIOUSLY PAID FOR	(Column 3) PRESENT EXTRA	SMALL ENTITY RATE($)	SMALL ENTITY ADDITIONAL FEE($)	OR	OTHER THAN SMALL ENTITY RATE($)	OTHER THAN SMALL ENTITY ADDITIONAL FEE($)
AMENDMENT A	Total (37 CFR 1.16(i))	*	Minus	**	=	x =		OR	x =	
AMENDMENT A	Independent (37 CFR 1.16(h))	*	Minus	***	=	x =		OR	x =	
AMENDMENT A	Application Size Fee (37 CFR 1.16(s))									
AMENDMENT A	FIRST PRESENTATION OF MULTIPLE DEPENDENT CLAIM (37 CFR 1.16(j))							OR		
						TOTAL ADD'L FEE		OR	TOTAL ADD'L FEE	

		(Column 1) CLAIMS REMAINING AFTER AMENDMENT		(Column 2) HIGHEST NUMBER PREVIOUSLY PAID FOR	(Column 3) PRESENT EXTRA	RATE($)	ADDITIONAL FEE($)		RATE($)	ADDITIONAL FEE($)
AMENDMENT B	Total (37 CFR 1.16(i))	*	Minus	**	=	x =		OR	x =	
AMENDMENT B	Independent (37 CFR 1.16(h))	*	Minus	***	=	x =		OR	x =	
AMENDMENT B	Application Size Fee (37 CFR 1.16(s))									
AMENDMENT B	FIRST PRESENTATION OF MULTIPLE DEPENDENT CLAIM (37 CFR 1.16(j))							OR		
						TOTAL ADD'L FEE		OR	TOTAL ADD'L FEE	

* If the entry in column 1 is less than the entry in column 2, write "0" in column 3.
** If the "Highest Number Previously Paid For" IN THIS SPACE is less than 20, enter "20".
*** If the "Highest Number Previously Paid For" IN THIS SPACE is less than 3, enter "3".
The "Highest Number Previously Paid For" (Total or Independent) is the highest found in the appropriate box in column 1.

UNITED STATES PATENT AND TRADEMARK OFFICE

UNITED STATES DEPARTMENT OF COMMERCE
United States Patent and Trademark Office
Address: COMMISSIONER FOR PATENTS
P.O. Box 1450
Alexandria, Virginia 22313-1450
www.uspto.gov

APPLICATION NUMBER	FILING or 371(c) DATE	GRP ART UNIT	FIL FEE REC'D	ATTY.DOCKET.NO	TOT CLAIMS	IND CLAIMS
15/875,605	01/19/2018	2883	2120	02316.2584US23/ADC003176	24	2

CONFIRMATION NO. 4897

142510
M&G CommScope
P.O. Box 2903
Minneapolis, MN 55402

FILING RECEIPT

OC000000097352001

Date Mailed: 02/14/2018

Receipt is acknowledged of this non-provisional patent application. The application will be taken up for examination in due course. Applicant will be notified as to the results of the examination. Any correspondence concerning the application must include the following identification information: the U.S. APPLICATION NUMBER, FILING DATE, NAME OF APPLICANT, and TITLE OF INVENTION. Fees transmitted by check or draft are subject to collection. Please verify the accuracy of the data presented on this receipt. **If an error is noted on this Filing Receipt, please submit a written request for a Filing Receipt Correction. Please provide a copy of this Filing Receipt with the changes noted thereon. If you received a "Notice to File Missing Parts" for this application, please submit any corrections to this Filing Receipt with your reply to the Notice. When the USPTO processes the reply to the Notice, the USPTO will generate another Filing Receipt incorporating the requested corrections**

Inventor(s)

Scott C. Kowalczyk, Savage, MN;
Jonathan Walter Coan, Savage, MN;
Jonathan R. Kaml, Shakopee, MN;

Applicant(s)

CommScope Technologies LLC, Hickory, NC;

Power of Attorney: None

Domestic Priority data as claimed by applicant

This application is a CON of 15/470,311 03/27/2017
which is a CON of 14/979,870 12/28/2015 PAT 9606319
which is a CON of 14/539,459 11/12/2014 PAT 9261666
which is a CON of 14/132,691 12/18/2013 PAT 8891931
which is a CON of 13/924,191 06/21/2013 PAT 8705929
which is a CON of 13/479,015 05/23/2012 PAT 8494333
which is a CON of 13/032,337 02/22/2011 PAT 8189984
which is a CON of 12/793,556 06/03/2010 PAT 7894701
which is a CON of 12/182,705 07/30/2008 PAT 7756379
which claims benefit of 61/029,248 02/15/2008
and claims benefit of 60/954,214 08/06/2007

Foreign Applications for which priority is claimed (You may be eligible to benefit from the **Patent Prosecution Highway** program at the USPTO. Please see http://www.uspto.gov for more information.) - None.
Foreign application information must be provided in an Application Data Sheet in order to constitute a claim to foreign priority. See 37 CFR 1.55 and 1.76.

Permission to Access Application via Priority Document Exchange: Yes

Permission to Access Search Results: Yes

Applicant may provide or rescind an authorization for access using Form PTO/SB/39 or Form PTO/SB/69 as appropriate.

If Required, Foreign Filing License Granted: 02/12/2018

The country code and number of your priority application, to be used for filing abroad under the Paris Convention, is **US 15/875,605**

Projected Publication Date: 05/24/2018

Non-Publication Request: No

Early Publication Request: No

Title

FIBER OPTIC ENCLOSURE WITH INTERNAL CABLE SPOOL

Preliminary Class

385

Statement under 37 CFR 1.55 or 1.78 for AIA (First Inventor to File) Transition Applications: No

PROTECTING YOUR INVENTION OUTSIDE THE UNITED STATES

Since the rights granted by a U.S. patent extend only throughout the territory of the United States and have no effect in a foreign country, an inventor who wishes patent protection in another country must apply for a patent in a specific country or in regional patent offices. Applicants may wish to consider the filing of an international application under the Patent Cooperation Treaty (PCT). An international (PCT) application generally has the same effect as a regular national patent application in each PCT-member country. The PCT process **simplifies** the filing of patent applications on the same invention in member countries, but **does not result** in a grant of "an international patent" and does not eliminate the need of applicants to file additional documents and fees in countries where patent protection is desired.

Almost every country has its own patent law, and a person desiring a patent in a particular country must make an application for patent in that country in accordance with its particular laws. Since the laws of many countries differ in various respects from the patent law of the United States, applicants are advised to seek guidance from specific foreign countries to ensure that patent rights are not lost prematurely.

Applicants also are advised that in the case of inventions made in the United States, the Director of the USPTO must issue a license before applicants can apply for a patent in a foreign country. The filing of a U.S. patent application serves as a request for a foreign filing license. The application's filing receipt contains further information and guidance as to the status of applicant's license for foreign filing.

Applicants may wish to consult the USPTO booklet, "General Information Concerning Patents" (specifically, the section entitled "Treaties and Foreign Patents") for more information on timeframes and deadlines for filing foreign patent applications. The guide is available either by contacting the USPTO Contact Center at 800-786-9199, or it can be viewed on the USPTO website at http://www.uspto.gov/web/offices/pac/doc/general/index.html.

For information on preventing theft of your intellectual property (patents, trademarks and copyrights), you may wish to consult the U.S. Government website, http://www.stopfakes.gov. Part of a Department of Commerce initiative, this website includes self-help "toolkits" giving innovators guidance on how to protect intellectual property in specific countries such as China, Korea and Mexico. For questions regarding patent enforcement issues, applicants may call the U.S. Government hotline at 1-866-999-HALT (1-866-999-4258).

LICENSE FOR FOREIGN FILING UNDER

Title 35, United States Code, Section 184

Title 37, Code of Federal Regulations, 5.11 & 5.15

GRANTED

The applicant has been granted a license under 35 U.S.C. 184, if the phrase "IF REQUIRED, FOREIGN FILING LICENSE GRANTED" followed by a date appears on this form. Such licenses are issued in all applications where the conditions for issuance of a license have been met, regardless of whether or not a license may be required as set forth in 37 CFR 5.15. The scope and limitations of this license are set forth in 37 CFR 5.15(a) unless an earlier license has been issued under 37 CFR 5.15(b). The license is subject to revocation upon written notification. The date indicated is the effective date of the license, unless an earlier license of similar scope has been granted under 37 CFR 5.13 or 5.14.

This license is to be retained by the licensee and may be used at any time on or after the effective date thereof unless it is revoked. This license is automatically transferred to any related applications(s) filed under 37 CFR 1.53(d). This license is not retroactive.

The grant of a license does not in any way lessen the responsibility of a licensee for the security of the subject matter as imposed by any Government contract or the provisions of existing laws relating to espionage and the national security or the export of technical data. Licensees should apprise themselves of current regulations especially with respect to certain countries, of other agencies, particularly the Office of Defense Trade Controls, Department of State (with respect to Arms, Munitions and Implements of War (22 CFR 121-128)); the Bureau of Industry and Security, Department of Commerce (15 CFR parts 730-774); the Office of Foreign AssetsControl, Department of Treasury (31 CFR Parts 500+) and the Department of Energy.

NOT GRANTED

No license under 35 U.S.C. 184 has been granted at this time, if the phrase "IF REQUIRED, FOREIGN FILING LICENSE GRANTED" DOES NOT appear on this form. Applicant may still petition for a license under 37 CFR 5.12, if a license is desired before the expiration of 6 months from the filing date of the application. If 6 months has lapsed from the filing date of this application and the licensee has not received any indication of a secrecy order under 35 U.S.C. 181, the licensee may foreign file the application pursuant to 37 CFR 5.15(b).

SelectUSA

The United States represents the largest, most dynamic marketplace in the world and is an unparalleled location for business investment, innovation, and commercialization of new technologies. The U.S. offers tremendous resources and advantages for those who invest and manufacture goods here. Through SelectUSA, our nation works to promote and facilitate business investment. SelectUSA provides information assistance to the international investor

community; serves as an ombudsman for existing and potential investors; advocates on behalf of U.S. cities, states, and regions competing for global investment; and counsels U.S. economic development organizations on investment attraction best practices. To learn more about why the United States is the best country in the world to develop technology, manufacture products, deliver services, and grow your business, visit http://www.SelectUSA.gov or call +1-202-482-6800.

S/N NEW FILING PATENT

IN THE UNITED STATES PATENT AND TRADEMARK OFFICE

Inventor:	KOWALCZYK ET AL.	Examiner:	UNKNOWN
Serial No.:	HEREWITH	Group Art Unit:	UNKNOWN
Filed:	NEW FILING	Docket No.:	02316.2584US23
Title:	FIBER OPTIC ENCLOSURE WITH INTERNAL CABLE SPOOL		

Filed via EFS-Web

INFORMATION DISCLOSURE STATEMENT (37 C.F.R. § 1.97(b))

Commissioner for Patents
P.O. Box 1450
Alexandria, Virginia 22313-1450

142510
PATENT TRADEMARK OFFICE

Attention: Commissioner for Patents

With regard to the above-identified application, the items of information listed on the enclosed Form 1449 are brought to the attention of the Examiner.

This statement should be considered because it is submitted within three months of the filing date of the above-identified application, which is not an application under 37 C.F.R. § 1.53(d). Accordingly, no fee is due for consideration of the items listed on the enclosed Form 1449.

In accordance with 37 C.F.R. §1.98(a)(2) and §1.98(d), a copy of each foreign patent and/or a copy of each publication, other than U.S. patents and U.S. patent application publications, has been provided only for those items listed on the enclosed Form 1449 that have not previously been cited by or submitted to the U.S. Patent and Trademark Office in parent applications, U.S. Serial No. 15/470,311 filed on March 27, 2017; U.S. Serial No. 14/979,870 filed on December 28, 2015; U.S. Serial No. 14/539,459 filed on November 12, 2014; U.S. Serial No. 14/132,691 filed on December 18, 2013; U.S. Serial No. 13/924,191 filed on June 21, 2013; U.S. Serial No. 13/479,015 filed on May 23, 2012; U.S. Serial No. 13/032,337 filed on February 22, 2011; U.S. Serial No. 12/793,556 filed on June 3, 2010; and U.S. Serial No. 12/182,705 filed on July 30, 2008.

No representation is made that a reference is "prior art" within the meaning of 35 U.S.C. §§ 102 and 103 and Applicants reserve the right, pursuant to 37 C.F.R. § 1.131 or otherwise, to establish that the reference(s) are not "prior art."

Consideration of the items listed is respectfully requested. Pursuant to the provisions of M.P.E.P. 609, it is requested that the Examiner return a copy of the attached Form 1449, marked as being considered and initialed by the Examiner, to the undersigned with the next official communication.

Please charge any additional fees or credit any overpayment to Deposit Account No. 13-2725.

Respectfully submitted,

MERCHANT & GOULD P.C.
P.O. Box 2903
Minneapolis, Minnesota 55402-0903
(612) 332-5300

Date: January 19, 2018

/David G. Schmaltz/
David G. Schmaltz
Reg. No. 39,828
DGS:PLSkaw

FORM 1449* INFORMATION DISCLOSURE STATEMENT IN AN APPLICATION (Use several sheets if necessary)	Docket Number: 02316.2584US23	Application Number: NEW FILING
	Inventor: KOWALCZYK ET AL.	
	Filing Date: HEREWITH	Group Art Unit: UNKNOWN

U.S. PATENT DOCUMENTS						
EXAMINER INITIAL	DOCUMENT NO.	DATE	NAME	CLASS	SUBCLASS	FILING DATE IF APPROPRIATE
	1,276,825	08/27/1918	Swope			
	1,442,999	01/23/1923	Boyle			
	1,446,410	02/20/1923	Bennett et al.			
	1,474,580	11/20/1923	Clark et al.			
	RE 20,995	02/07/1939	Beasley			
	2,502,496	04/04/1950	Wickman			
	2,521,226	09/05/1950	Keller			
	2,727,703	12/20/1955	Bonnett			
	3,131,729	05/05/1964	Leysinger			
	3,657,491	04/18/1972	Ryder et al.			
	3,667,417	06/06/1972	Clinkenbeard			
	3,920,308	11/18/1975	Murray			
	3,940,086	02/24/1976	Stoqulet			
	4,053,118	10/11/1977	Aikins			
	4,081,258	03/28/1978	Goell et al.			
	4,201,278	05/06/1980	Balde			
	4,384,688	05/24/1983	Smith			
	4,587,801	05/13/1986	Missout et al.			
	4,635,875	01/13/1987	Apple			
	4,657,140	04/14/1987	Zagar et al.			
	4,666,237	05/19/1987	Mallinson			
	4,767,073	08/30/1988	Malzacher			
	4,869,437	09/26/1989	Berz et al.			
	4,883,337	11/28/1989	Dahlgren			
	4,913,369	04/03/1990	Lia et al.			
	4,939,798	07/10/1990	Last			

EXAMINER	DATE CONSIDERED

EXAMINER: Initial if reference considered, whether or not citation is in conformance with MPEP 609; draw line through citation if not in conformance and not considered. Include copy of this form for next communication to the Applicant.

*Substitute Disclosure Statement Form (PTO-1449) Patent and Trademark Office; U.S. DEPARTMENT OF COMMERCE

FORM 1449* INFORMATION DISCLOSURE STATEMENT IN AN APPLICATION (Use several sheets if necessary)	Docket Number: 02316.2584US23	Application Number: NEW FILING
	Inventor: KOWALCZYK ET AL.	
	Filing Date: HEREWITH	Group Art Unit: UNKNOWN

	4,940,859	07/10/1990	Peterson			
	4,953,194	08/28/1990	Hansen et al.			
	4,968,929	11/06/1990	Hauck et al.			
	4,978,310	12/18/1990	Shichida			
	5,016,554	05/21/1991	Harris, Jr. et al.			
	5,052,940	10/01/1991	Bengal			
	5,066,149	11/19/1991	Wheeler et al.			
	5,066,256	11/19/1991	Ward, Sr.			
	5,071,211	12/10/1991	Debortoli et al.			
	5,074,863	12/24/1991	Dines			
	5,100,221	03/31/1992	Carney et al.			
	5,107,532	04/21/1992	Hansen et al.			
	5,161,988	11/10/1992	Krupka			
	5,166,970	11/24/1992	Ward			
	5,167,001	11/24/1992	Debortoli et al.			
	5,185,843	02/09/1993	Aberson et al.			
	5,222,164	06/22/1993	Bass, Sr. et al.			
	5,265,187	11/23/1993	Morin et al.			
	5,265,815	11/30/1993	Soyka et al.			
	5,280,861	01/25/1994	Corriveau			
	5,305,405	04/19/1994	Emmons et al.			
	5,317,663	05/31/1994	Beard et al.			
	5,326,040	07/05/1994	Kramer			
	5,335,874	08/09/1994	Shrum et al.			
	5,353,367	10/04/1994	Czosnowski et al.			
	5,393,249	02/28/1995	Morgenstern et al.			
	5,394,503	02/28/1995	Dietz, Jr. et al.			
	5,413,494	05/09/1995	Dewey et al.			
	5,418,334	05/23/1995	Williams			

EXAMINER	DATE CONSIDERED
EXAMINER: Initial if reference considered, whether or not citation is in conformance with MPEP 609; draw line through citation if not in conformance and not considered. Include copy of this form for next communication to the Applicant.	

*Substitute Disclosure Statement Form (PTO-1449) Patent and Trademark Office; U.S. DEPARTMENT OF COMMERCE

FORM 1449* INFORMATION DISCLOSURE STATEMENT IN AN APPLICATION (Use several sheets if necessary)	Docket Number: 02316.2584US23	Application Number: NEW FILING
	Inventor: KOWALCZYK ET AL.	
	Filing Date: HEREWITH	Group Art Unit: UNKNOWN

	5,419,717	05/30/1995	Abendschein et al.			
	5,434,944	07/18/1995	Kerry et al.			
	5,448,015	09/05/1995	Jamet et al.			
	5,448,675	09/05/1995	Leone et al.			
	5,467,062	11/14/1995	Burroughs et al.			
	5,473,715	12/05/1995	Schofield et al.			
	5,483,467	01/09/1996	Krupka et al.			
	5,490,229	02/06/1996	Ghandeharizadeh et al.			
	5,494,234	02/27/1996	Kramer			
	5,494,446	02/27/1996	DeLucia et al.			
	5,497,444	03/05/1996	Wheeler			
	5,519,275	05/21/1996	Scott et al.			
	5,522,561	06/04/1996	Koyamatsu et al.			
	5,544,836	08/13/1996	Pera			
	5,551,545	09/03/1996	Gelfman			
	5,613,030	03/18/1997	Hoffer et al.			
	5,638,481	06/10/1997	Arnett			
	5,657,412	08/12/1997	Caudrelier			
	5,685,741	11/11/1997	Dewey et al.			
	5,703,990	12/30/1997	Robertson et al.			
	5,709,347	01/20/1998	Hoffmann et al.			
	5,712,942	01/27/1998	Jennings et al.			
	5,717,810	02/10/1998	Wheeler			
	5,718,397	02/17/1998	Stevens			
	5,734,774	03/31/1998	Morrell			
	5,749,148	05/12/1998	White, III et al.			
	5,787,219	07/28/1998	Mueller et al.			
	5,821,510	10/13/1998	Cohen et al.			
	5,854,824	12/29/1998	Bengal et al.			

EXAMINER	DATE CONSIDERED

EXAMINER: Initial if reference considered, whether or not citation is in conformance with MPEP 609; draw line through citation if not in conformance and not considered. Include copy of this form for next communication to the Applicant.

*Substitute Disclosure Statement Form (PTO-1449) Patent and Trademark Office; U.S. DEPARTMENT OF COMMERCE

FORM 1449* INFORMATION DISCLOSURE STATEMENT IN AN APPLICATION (Use several sheets if necessary)	Docket Number: 02316.2584US23	Application Number: NEW FILING
	Inventor: KOWALCZYK ET AL.	
	Filing Date: HEREWITH	Group Art Unit: UNKNOWN

	5,915,640	06/29/1999	Wagter et al.			
	5,987,203	11/16/1999	Abel et al.			
	5,987,207	11/16/1999	Hoke			
	5,992,787	11/30/1999	Burke			
	6,002,331	12/14/1999	Laor			
	6,077,108	06/20/2000	Lorscheider et al.			
	6,095,837	08/01/2000	David et al.			
	6,116,961	09/12/2000	Henneberger et al.			
	6,215,938 B1	04/10/2001	Reitmeier et al.			
	6,220,413 B1	04/24/2001	Walters et al.			
	6,222,908 B1	04/24/2001	Bartolutti et al.			
	6,222,975 B1	04/24/2001	Gilbert et al.			
	6,234,830 B1	05/22/2001	Ensz et al.			
	6,238,235 B1	05/29/2001	Shavit et al.			
	6,285,293 B1	09/04/2001	German et al.			
	6,300,877 B1	10/09/2001	Schannach et al.			
	6,315,598 B1	11/13/2001	Elliot et al.			
	6,330,148 B1	12/11/2001	Won et al.			
	6,330,307 B1	12/11/2001	Bloch et al.			
	6,350,148 B1	02/26/2002	Bartolutti et al.			
	6,367,347 B1	04/09/2002	Blaschke et al.			
	6,421,322 B1	07/16/2002	Koziy et al.			
	6,424,710 B1	07/23/2002	Bartolutti et al.			
	6,456,768 B1	09/24/2002	Boncek et al.			
	D466,479 S	12/03/2002	Pein et al.			
	6,494,396 B2	12/17/2002	Sugata			
	6,499,861 B1	12/31/2002	German et al.			
	6,511,231 B2	01/28/2003	Lampert et al.			
	6,522,737 B1	02/18/2003	Bartolutti et al.			

EXAMINER	DATE CONSIDERED

EXAMINER: Initial if reference considered, whether or not citation is in conformance with MPEP 609; draw line through citation if not in conformance and not considered. Include copy of this form for next communication to the Applicant.

*Substitute Disclosure Statement Form (PTO-1449) Patent and Trademark Office; U.S. DEPARTMENT OF COMMERCE

FORM 1449* INFORMATION DISCLOSURE STATEMENT IN AN APPLICATION (Use several sheets if necessary)	Docket Number: 02316.2584US23	Application Number: NEW FILING
	Inventor: KOWALCZYK ET AL.	
	Filing Date: HEREWITH	Group Art Unit: UNKNOWN

	6,522,826 B2	02/18/2003	Gregory			
	6,533,216 B1	03/18/2003	Bumgarner et al.			
	6,554,221 B2	04/29/2003	Hinds			
	6,554,484 B2	04/29/2003	Lampert			
	6,574,586 B1	06/03/2003	David et al.			
	6,591,051 B2	07/08/2003	Solheid et al.			
	6,616,080 B1	09/09/2003	Edwards el al.			
	6,626,697 B1	09/30/2003	Martin et al.			
	6,636,152 B2	10/21/2003	Schannach et al.			
	6,643,443 B2	11/04/2003	Holman et al.			
	6,669,129 B1	12/30/2003	Shah			
	6,684,179 B1	01/27/2004	David			
	6,711,339 B2	03/23/2004	Puetz et al.			
	6,715,619 B2	04/06/2004	Kim et al.			
	6,725,177 B2	04/20/2004	David et al.			
	6,743,044 B2	06/01/2004	Musolf et al.			
	6,745,971 B1	06/08/2004	Renzoni			
	6,760,530 B1	07/06/2004	Mandry			
	6,793,408 B2	09/21/2004	Levy et al.			
	6,802,735 B2	10/12/2004	Pepe et al.			
	6,808,116 B1	10/26/2004	Eslambolchi et al.			
	6,814,624 B2	11/09/2004	Clark et al.			
	6,834,517 B1	12/28/2004	Sheehy, Jr.			
	6,845,207 B2	01/18/2005	Schray			
	6,850,685 B2	02/01/2005	Tinucci et al.			
	6,856,748 B1	02/15/2005	Elkins, II et al.			
	6,885,799 B2	04/26/2005	Lee			
	6,898,368 B2	05/24/2005	Colombo et al.			
	6,901,200 B2	05/31/2005	Schray			

EXAMINER	DATE CONSIDERED

EXAMINER: Initial if reference considered, whether or not citation is in conformance with MPEP 609; draw line through citation if not in conformance and not considered. Include copy of this form for next communication to the Applicant.

*Substitute Disclosure Statement Form (PTO-1449) Patent and Trademark Office; U.S. DEPARTMENT OF COMMERCE

FORM 1449* INFORMATION DISCLOSURE STATEMENT IN AN APPLICATION (Use several sheets if necessary)	Docket Number: 02316.2584US23	Application Number: NEW FILING
	Inventor: KOWALCZYK ET AL.	
	Filing Date: HEREWITH	Group Art Unit: UNKNOWN

	6,905,363 B2	06/14/2005	Musolf et al.			
	6,915,058 B2	07/05/2005	Pons			
	6,932,517 B2	08/23/2005	Swayze et al.			
	6,933,441 B2	08/23/2005	Fuller et al.			
	6,937,725 B2	08/30/2005	Liao			
	6,944,387 B2	09/13/2005	Howell et al.			
	D510,068 S	09/27/2005	Haggay et al.			
	6,961,675 B2	11/01/2005	David			
	6,971,895 B2	12/06/2005	Sago et al.			
	6,976,867 B2	12/20/2005	Navarro et al.			
	6,997,410 B1	02/14/2006	Huang			
	7,000,863 B2	02/21/2006	Bethea et al.			
	7,011,538 B2	03/14/2006	Chang			
	7,016,590 B2	03/21/2006	Tanaka et al.			
	7,017,721 B1	03/28/2006	Bradford et al.			
	7,027,704 B2	04/11/2006	Frohlich et al.			
	7,077,710 B2	07/18/2006	Haggay et al.			
	7,081,808 B2	07/25/2006	Colombo et al.			
	7,112,090 B2	09/26/2006	Caveney et al.			
	7,123,810 B2	10/17/2006	Parrish			
	7,139,461 B2	11/21/2006	Puetz et al.			
	7,142,764 B2	11/28/2006	Allen et al.			
	7,153,142 B2	12/26/2006	Shifris et al.			
	7,165,728 B2	01/23/2007	Durrant et al.			
	7,193,422 B2	03/20/2007	Velleca et al.			
	7,210,858 B2	05/01/2007	Sago et al.			
	7,220,144 B1	05/22/2007	Elliot et al.			
	7,226,217 B2	06/05/2007	Benton et al.			
	7,234,944 B2	06/26/2007	Nordin et al.			

EXAMINER	DATE CONSIDERED

EXAMINER: Initial if reference considered, whether or not citation is in conformance with MPEP 609; draw line through citation if not in conformance and not considered. Include copy of this form for next communication to the Applicant.

*Substitute Disclosure Statement Form (PTO-1449) Patent and Trademark Office; U.S. DEPARTMENT OF COMMERCE

FORM 1449* INFORMATION DISCLOSURE STATEMENT IN AN APPLICATION (Use several sheets if necessary)	Docket Number: 02316.2584US23	Application Number: NEW FILING
	Inventor: KOWALCZYK ET AL.	
	Filing Date: HEREWITH	Group Art Unit: UNKNOWN

	7,297,018 B2	11/20/2007	Caveney et al.			
	7,312,715 B2	12/25/2007	Shalts et al.			
	7,315,224 B2	01/01/2008	Gurovich et al.			
	7,315,681 B2	01/01/2008	Kewitsch			
	D559,186 S	01/08/2008	Kelmer			
	7,346,253 B2	03/18/2008	Bloodsworth et al.			
	7,352,289 B1	04/01/2008	Harris			
	7,364,108 B2	04/29/2008	Kim et al.			
	7,369,739 B2	05/06/2008	Kline et al.			
	7,370,106 B2	05/06/2008	Caveney			
	7,397,997 B2	07/08/2008	Ferris et al.			
	7,400,814 B1	07/15/2008	Hendrickson et al.			
	7,406,242 B1	07/29/2008	Braga			
	7,477,829 B2	01/13/2009	Kaplan			
	7,479,032 B2	01/20/2009	Hoath et al.			
	7,519,000 B2	04/14/2009	Caveney et al.			
	7,522,806 B2	04/21/2009	Hendrickson et al.			
	7,533,841 B1	05/19/2009	Harrison et al.			
	7,534,137 B2	05/19/2009	Caveney et al.			
	7,546,018 B2	06/09/2009	Hendrickson et al.			
	7,552,872 B2	06/30/2009	Tokita et al.			
	7,570,861 B2	08/04/2009	Smrha et al.			
	7,591,667 B2	09/22/2009	Gatnau Navarro et al.			
	7,676,136 B2	03/09/2010	Wakileh et al.			
	7,697,811 B2	04/13/2010	Murano et al.			
	7,711,233 B2	05/04/2010	Mahoney			
	7,715,679 B2	05/11/2010	Kowalczyk et al.			
	7,751,672 B2	07/06/2010	Smith et al.			
	7,756,379 B2	07/13/2010	Kowalczyk et al.			

EXAMINER	DATE CONSIDERED

EXAMINER: Initial if reference considered, whether or not citation is in conformance with MPEP 609; draw line through citation if not in conformance and not considered. Include copy of this form for next communication to the Applicant.

FORM 1449* INFORMATION DISCLOSURE STATEMENT IN AN APPLICATION (Use several sheets if necessary)	Docket Number: 02316.2584US23	Application Number: NEW FILING
	Inventor: KOWALCZYK ET AL.	
	Filing Date: HEREWITH	Group Art Unit: UNKNOWN

	7,809,234 B2	10/05/2010	Smith et al.			
	7,811,119 B2	10/12/2010	Caveney et al.			
	7,869,426 B2	01/11/2011	Hough et al.			
	7,869,682 B2	01/11/2011	Kowalczyk et al.			
	7,872,738 B2	01/18/2011	Abbott			
	7,885,505 B2	02/08/2011	Zimmel			
	7,894,701 B2	02/22/2011	Kowalczyk et al.			
	8,081,857 B2	12/20/2011	Nair et al.			
	8,131,126 B2	03/06/2012	Kowalczyk et al.			
	8,157,582 B2	04/17/2012	Frey et al.			
	8,189,984 B2	05/29/2012	Kowalczyk et al.			
	8,229,267 B2	07/24/2012	Kowalczyk et al.			
	8,254,740 B2	08/28/2012	Smith et al.			
	8,326,107 B2	12/04/2012	Cooke et al.			
	8,380,035 B2	02/19/2013	Kowalczyk et al.			
	8,422,847 B2	04/16/2013	Kowalczyk et al.			
	8,494,333 B2	07/23/2013	Kowalczyk et al.			
	8,494,334 B2	07/23/2013	Kowalczyk et al.			
	8,565,572 B2	10/22/2013	Krampotich et al.			
	8,705,929 B2	04/22/2014	Kowalczyk et al.			
	8,891,931 B2	11/18/2014	Kowalczyk et al.			
	8,929,706 B2	01/06/2015	Teymouri			
	8,938,147 B2	01/20/2015	Krampotich et al.			
	9,170,392 B2	10/27/2015	Krampotich et al.			
	9,261,663 B2	02/16/2016	Loeffelholz et al.			
	9,261,666 B2	02/16/2016	Kowalczyk et al.			
	9,341,802 B2	05/17/2016	Krampotich et al.			
	9,606,319 B2	03/28/2017	Kowalczyk et al.			
	2001/0019002 A1	09/06/2001	Walters et al.			

EXAMINER	DATE CONSIDERED

EXAMINER: Initial if reference considered, whether or not citation is in conformance with MPEP 609; draw line through citation if not in conformance and not considered. Include copy of this form for next communication to the Applicant.

*Substitute Disclosure Statement Form (PTO-1449) Patent and Trademark Office; U.S. DEPARTMENT OF COMMERCE

FORM 1449* INFORMATION DISCLOSURE STATEMENT IN AN APPLICATION (Use several sheets if necessary)	Docket Number: 02316.2584US23	Application Number: NEW FILING
	Inventor: KOWALCZYK ET AL.	
	Filing Date: HEREWITH	Group Art Unit: UNKNOWN

	2001/0048044 A1	12/06/2001	Sugata			
	2002/0003186 A1	01/10/2002	Hinds			
	2002/0023814 A1	02/28/2002	Poutiatine			
	2002/0126980 A1	09/12/2002	Holman et al.			
	2002/0164121 A1	11/07/2002	Brennan, III et al.			
	2002/0171002 A1	11/21/2002	Krestsch et al.			
	2003/0037480 A1	02/27/2003	Davis			
	2004/0170369 A1	09/02/2004	Pons			
	2004/0240807 A1	12/02/2004	Frohlich et al.			
	2004/0244430 A1	12/09/2004	Sheehy, Jr.			
	2004/0258384 A1	12/23/2004	Trebesch et al.			
	2005/0103515 A1	05/19/2005	Fuller et al.			
	2005/0145522 A1	07/07/2005	Bloodworth et al.			
	2005/0184186 A1	08/25/2005	Tsoi et al.			
	2005/0213920 A1	09/29/2005	Tanaka et al.			
	2005/0247136 A1	11/10/2005	Cross et al.			
	2005/0258411 A1	11/24/2005	Zeitler			
	2006/0045458 A1	03/02/2006	Sasaki et al.			
	2006/0148279 A1	07/06/2006	German et al.			
	2006/0160395 A1	07/20/2006	Macauley et al.			
	2006/0163403 A1	07/27/2006	Dickson			
	2006/0183362 A1	08/17/2006	Mullaney et al.			
	2006/0210230 A1	09/21/2006	Kline et al.			
	2006/0280418 A1	12/14/2006	Mahoney			
	2007/0025675 A1	02/01/2007	Kramer			
	2007/0165995 A1	07/19/2007	Reagan et al.			
	2007/0189691 A1	08/16/2007	Barth et al.			
	2007/0237470 A1	10/11/2007	Aronson et al.			
	2008/0013909 A1	01/17/2008	Kostet et al.			

EXAMINER	DATE CONSIDERED

EXAMINER: Initial if reference considered, whether or not citation is in conformance with MPEP 609; draw line through citation if not in conformance and not considered. Include copy of this form for next communication to the Applicant.

*Substitute Disclosure Statement Form (PTO-1449) Patent and Trademark Office; U.S. DEPARTMENT OF COMMERCE

FORM 1449* INFORMATION DISCLOSURE STATEMENT IN AN APPLICATION (Use several sheets if necessary)	Docket Number: 02316.2584US23	Application Number: NEW FILING
	Inventor: KOWALCZYK ET AL.	
	Filing Date: HEREWITH	Group Art Unit: UNKNOWN

	2008/0035778 A1	02/14/2008	Belden et al.			
	2008/0037945 A1	02/14/2008	Gniadek et al.			
	2008/0100467 A1	05/01/2008	Downie et al.			
	2008/0218947 A1	09/11/2008	Atkinson			
	2008/0236209 A1	10/02/2008	Conti et al.			
	2008/0292261 A1	11/27/2008	Kowalczyk et al.			
	2008/0315030 A1	12/25/2008	Hendrickson et al.			
	2009/0060441 A1	03/05/2009	Kowalczyk et al.			
	2009/0074370 A1	03/19/2009	Kowalczyk et al.			
	2009/0097846 A1	04/16/2009	Kozischek et al.			
	2009/0098763 A1	04/16/2009	Below et al.			
	2009/0166404 A1	07/02/2009	German et al.			
	2009/0190894 A1	07/30/2009	Nhep et al.			
	2009/0215310 A1	08/27/2009	Hoath et al.			
	2009/0257726 A1	10/15/2009	Redmann et al.			
	2009/0317047 A1	12/24/2009	Smith et al.			
	2010/0054680 A1	03/04/2010	Lochkovic et al.			
	2010/0054682 A1	03/04/2010	Cooke			
	2010/0054684 A1	03/04/2010	Cooke et al.			
	2010/0074587 A1	03/25/2010	Loeffelholz et al.			
	2010/0090830 A1	04/15/2010	Conti et al.			
	2010/0166376 A1	07/01/2010	Nair et al.			
	2010/0211664 A1	08/19/2010	Raza et al.			
	2010/0211665 A1	08/19/2010	Raza et al.			
	2010/0211697 A1	08/19/2010	Raza et al.			
	2010/0215049 A1	08/26/2010	Raza et al.			
	2010/0322583 A1	12/23/2010	Cooke et al.			
	2011/0044599 A1	02/24/2011	Kowalczyk et al.			
	2011/0092100 A1	04/21/2011	Coffey et al.			

EXAMINER	DATE CONSIDERED

EXAMINER: Initial if reference considered, whether or not citation is in conformance with MPEP 609; draw line through citation if not in conformance and not considered. Include copy of this form for next communication to the Applicant.

FORM 1449* INFORMATION DISCLOSURE STATEMENT IN AN APPLICATION (Use several sheets if necessary)	Docket Number: 02316.2584US23	Application Number: NEW FILING
	Inventor: KOWALCZYK ET AL.	
	Filing Date: HEREWITH	Group Art Unit: UNKNOWN

	2011/0094274 A1	04/28/2011	Conti et al.				
	2011/0103761 A1	05/05/2011	LeBlanc et al.				
	2011/0158598 A1	06/30/2011	LeBlanc et al.				
	2013/0094828 A1	04/18/2013	Loeffelholz et al.				
	2013/0170810 A1	07/04/2013	Badar et al.				
	2013/0170811 A1	07/04/2013	Kowalczyk et al.				
	2013/0242866 A1	09/19/2013	Lin et al.				
	2014/0010512 A1	01/09/2014	Kowalczyk et al.				
	2014/0010513 A1	01/09/2014	Kowalczyk et al.				
	2015/0063770 A1	03/05/2015	Kowalczyk et al.				
	2015/0093088 A1	04/02/2015	Matz et al.				
	2017/0199344 A1	07/13/2017	Kowalczyk et al.				
FOREIGN PATENT DOCUMENTS							
	DOCUMENT NO.	DATE	COUNTRY	CLASS	SUBCLASS	TRANSLATION	
						YES	NO
	1799296 A	07/05/2006	CN			Abstract	
	42 26 368 A1	02/10/1994	DE			Abstract	
	102 44 304 B3	03/18/2004	DE			Abstract	
	1 107 031 A1	06/13/2001	EP				
	2 618 195 A2	07/24/2013	EP				
	2 566 997 A1	01/10/1986	FR			Abstract	
	2 236 398 A	04/03/1991	GB				
	9-236709	09/09/1997	JP			Abstract	
	11-349230	12/21/1999	JP			Machine Translation	
	2003-114339	04/18/2003	JP			Abstract	
	2005-73365	03/17/2005	JP			Abstract	
	2005-249858	09/15/2005	JP			Abstract	
	2007-121609	05/17/2007	JP			Abstract	
	WO 2009/048680 A1	04/16/2009	PCT				

EXAMINER	DATE CONSIDERED

EXAMINER: Initial if reference considered, whether or not citation is in conformance with MPEP 609; draw line through citation if not in conformance and not considered. Include copy of this form for next communication to the Applicant.

*Substitute Disclosure Statement Form (PTO-1449) Patent and Trademark Office; U.S. DEPARTMENT OF COMMERCE

FORM 1449* INFORMATION DISCLOSURE STATEMENT IN AN APPLICATION (Use several sheets if necessary)	Docket Number: 02316.2584US23	Application Number: NEW FILING
	Inventor: KOWALCZYK ET AL.	
	Filing Date: HEREWITH	Group Art Unit: UNKNOWN

	WO 2010/001400 A1	01/07/2010	PCT				
	WO 2010/081186 A1	07/22/2010	PCT				
	WO 2010/121639 A1	10/28/2010	PCT			Abstract	

OTHER DOCUMENTS (Including Author, Title, Date, Pertinent Pages, Etc.)		
		7 Inch Modules, ADC Telecommunications, Inc, © 1998, "7 Inch Connector Module with IFC", pp. 127
		Answer, CommScope Technologies LLC v. Clearfield, Inc., Case No. 0:17-cv-00307-PJS-BRT, 27 pages (April 24, 2017)
		Australian Examination Report for Application No. 2015205930; July 13, 2016; 4 pages
		Australian Office Action (Appln. No. 2008247361), dated November 8, 2013.
		Avaya's Enhanced SYSTIMAX® iPatch System Enables IT Managers to Optimise Network Efficiency and Cut Downtime, Press Release, 20 May 2003, obtained from http://www.avaya.com/usa/about-avaya/newsroom/news-releases/2003/pr-030520 on 01/07/2009
		Complaint relating to Civil Action No. 5:11-cv-02509-JS, ADC Telecommunications, Inc v. Opterna Am, Inc. filed April 11, 2011 (14 pages).
		Complaint relating to Civil Action No. 1:11cv-735 (GBL-IDD), ADC Telecommunications, Inc v. Opterna Am, Inc. filed July 12, 2011 (5 pages).
		Complaint, CommScope Technologies LLC v. Clearfield, Inc., Case No. 0:17-cv-00307, 77 pages (January 31, 2017)
		Complaint Exhibit G, CommScope Technologies LLC v. Clearfield, Inc., Case No. 0:17-cv-00307- PJS-BRT, 3 pages (January 31, 2017)
		Complaint Exhibit H, CommScope Technologies LLC v. Clearfield, Inc., Case No. 0:17-cv-00307-PJS-BRT, 3 pages (January 31, 2017)
		Defendant Clearfield Inc.'s Invalidity Claim Chart Exhibit 10, CommScope Technologies LLC v. Clearfield, Inc., Case No. 0:17-cv-00307-PJS-BRT, 36 pages (October 6, 2017)
		Defendant Clearfield Inc.'s Invalidity Claim Chart Exhibit 11, CommScope Technologies LLC v. Clearfield, Inc., Case No. 0:17-cv-00307-PJS-BRT, 60 pages (October 6, 2017)
		Defendant Clearfield Inc.'s Invalidity Claim Chart Table D, CommScope Technologies LLC v. Clearfield, Inc., Case No. 0:17-cv-00307-PJS-BRT, 7 pages (October 6, 2017)
		Defendant Clearfield Inc.'s Invalidity Claim Chart Table E, CommScope Technologies LLC v. Clearfield, Inc., Case No. 0:17-cv-00307-PJS-BRT, 7 pages (October 6, 2017)
		Defendant Clearfield Inc.'s Preliminary Invalidity Claim Charts and Disclosures, CommScope Technologies LLC v. Clearfield, Inc., Case No. 0:17-cv-00307-PJS-BRT, 62 pages (October 6, 2017)
		Description of Admitted Prior Art, 30 pages
		European Office Action for Application No. 151182271.5 – 1504; February 12, 2015, 7 pages

EXAMINER	DATE CONSIDERED
EXAMINER: Initial if reference considered, whether or not citation is in conformance with MPEP 609; draw line through citation if not in conformance and not considered. Include copy of this form for next communication to the Applicant.	

*Substitute Disclosure Statement Form (PTO-1449) Patent and Trademark Office; U.S. DEPARTMENT OF COMMERCE

FORM 1449* INFORMATION DISCLOSURE STATEMENT IN AN APPLICATION (Use several sheets if necessary)	Docket Number: 02316.2584US23	Application Number: NEW FILING
	Inventor: KOWALCZYK ET AL.	
	Filing Date: HEREWITH	Group Art Unit: UNKNOWN

		European Search Report for Application No. 13163032.9 mailed July 4, 2013
		European Search Report for Application No. 15182271.5 mailed December 2, 2015
		F3DF Modules, ADC Telecommunications, Inc. © 1995, "Individual 12-Pack Assemblies", pp. 90
		Fiber Cable Management Products, Third Edition, ADC Telecommunications, Inc., © 1995, 1998
		Fiber Distribution Frame, Pre-Terminated Rear Load Connector Module, Installation Instructions, ADC Telecommunications, Inc., © 2000
		Fiber Main Distribution Frame (FMDF), Fiber Terminal Block, Installation Instructions, ADC Telecommunications, Inc., © 2001
		Fiber Panel Products - Cable Management Tray Panels, ADC Telecommunications, Inc., © 1994, 1996 "72 Fiber Distribution Module (FDM) with Intrafacility Fiber Cable", pp. 56
		Fiber Panel Products, Second Edition, ADC Telecommunications, Inc., © 1994, 1996
		FL2000 Products – Preconfigured Panels, ADC Telecommunications, Inc., © 2000 "Rack or Cabinet Mount Termination Panel with Multifiber Cable", pp. 13
		FL2000 Products, ADC Telecommunications, Inc., © 1994, 1996
		FL2000 Products, ADC Telecommunications, Inc., © 1994, 1996, "Rack Mount Panel with Intrafacility Fiber Cable", pp. 16
		IFC Style Frame Modules, ADC Telecommunications, Inc., © 1995, "Connector Module Equipped with IFC", pp. 27
		Intelligent patching systems carving out a 'large' niche, Cabling Installation & Maintenance, Volume 12, Issue 7, July 2004 (5 pages).
		intelliMAC: The intelligent way to make Moves, Adds or Changes! NORDX/CDT ©2003 (6 pages).
		Petition for *Inter Partes* Review of U.S. Patent No. 8,705,929, Clearfield Inc. v. CommScope Technologies LLC, Case No. IPR2017-02122, 67 pages (September 15, 2017)
		Inter Partes Review Case No. IPR2017-02122, Ex. 1003 - Declaration of Dr. Michael Lebby, 141 pages (September 15, 2017)
		Inter Partes Review Case No. IPR2017-02122, Ex. 1004 - U.S. Patent No. 6,220,413 B1
		Inter Partes Review Case No. IPR2017-02122, Ex. 1005 - U.S. Patent No. 6,933,441 B2
		Inter Partes Review Case No. IPR2017-02122, Ex. 1006 - U.S. Patent No. 4,201,278
		Inter Partes Review Case No. IPR2017-02122, Ex. 1007 - Prosecution History of U.S. App. No. 12/182,705, filed on Jul. 30, 2008., 332 pages
		Inter Partes Review Case No. IPR2017-02122, Ex. 1008 – PCT Patent No. WO 2009/048680 A1
		Inter Partes Review Case No. IPR2017-02122, Ex. 1009 – European Patent No. 2 618 195 A2

EXAMINER	DATE CONSIDERED
EXAMINER: Initial if reference considered, whether or not citation is in conformance with MPEP 609; draw line through citation if not in conformance and not considered. Include copy of this form for next communication to the Applicant.	

FORM 1449* INFORMATION DISCLOSURE STATEMENT IN AN APPLICATION (Use several sheets if necessary)	Docket Number: 02316.2584US23	Application Number: NEW FILING
	Inventor: KOWALCZYK ET AL.	
	Filing Date: HEREWITH	Group Art Unit: UNKNOWN

		Inter Partes Review Case No. IPR2017-02122, Ex. 1010 – File Wrapper of EP App. No. 13163032.9, downloaded from European Patent Office on August 10, 2017, 222 pages
		Inter Partes Review Case No. IPR2017-02122, Ex. 1011 - U.S. Patent No. 4,657,140
		Inter Partes Review Case No. IPR2017-02122, Ex. 1012 –USConec MTP® Brand Connectors Data Sheet (© 2014), 2 pages
		Inter Partes Review Case No. IPR2017-02122, Ex. 1013 – Katsuki Suematsu *et al*., "Super Low-Loss, Super High-Density Multi-Fiber Optical Connectors," Furukawa Review (n. 23), 2003 ("*Suematsu*")
		Inter Partes Review Case No. IPR2017-02122, Ex. 1014 - U.S. Patent No. 6,885,799 B2
		International Search Report and Written Opinion for PCT/US2008/062764 mailed August 8, 2008
		International Search Report and Written Opinion for PCT/US2008/075196 mailed November 18, 2008
		International Search Report and Written Opinion for PCT/US2008/072218 mailed March 18, 2009
		International Search Report and Written Opinion for PCT/US2010/052872 mailed January 12, 2011.
		International Search Report and Written Opinion for PCT/US2011/041605 mailed February 24, 2012
		Meredith, L., "Managers missing point of intelligent patching," *Daa Center News*, 21 June 2005, obtained 12/02/2008 from http://searchdatacenter.techtarget.com/news/article/0,289142,sid80_gcil099991,00.html.
		Next Generation Frame (NGF), Product Family Ordering Guide, ADC Telecommunications, Inc., © 1996, 1999, 2000, "Fiber Termination Blocks (FTB) Preterminated", pp. 8
		Next Generation Frame (NGF), Product Family Ordering Guide, ADC Telecommunications, Inc., © 1996, 1999, 2000
		Next Generation Frames - Fiber Termination Blocks, ADC Telecommunication, Inc., © 1998, "Fiber Termination Blocks (FTB) Preterminated" pp. 6
		Notice of Allowance for application Serial No. 13/924,191 mailed December 3, 2013
		Ohtsuki, F. et al., "Design of Optical Connectors with ID Modules," *Electronics and Communications in Japan*, Part 1, Vol. 77, No. 2, pp. 94-105 (February 1994).
		Plaintiff CommScope Technologies LLC's Memorandum in Support of Motion to Compel Discovery, CommScope Technologies LLC v. Clearfield, Inc., Case No. 0:17-cv-00307-PJS-BRT, 21 pages (October 9, 2017)
		Plaintiff CommScope Technologies LLC's Response to Defendant's First Set of Interrogatories to Plaintiff (Nos. 1-15), CommScope Technologies LLC v. Clearfield, Inc., Case No. 0:17-cv-00307-PJS-BRT, 26 pages (October 9, 2017)
		Plaintiff CommScope Technologies LLC's Supplemental Response to Defendant's Interrogatory No. 2, CommScope Technologies LLC v. Clearfield, Inc., Case No. 0:17-cv-00307-PJS-BRT, 5 pages (October 9, 2017)
		Plaintiff CommScope's Initial Claim Charts including Exhibits J and K, CommScope Technologies LLC v. Clearfield, Inc., Case No. 0:17-cv-00307-PJS-BRT, 28 pages (October 9, 2017)

EXAMINER	DATE CONSIDERED
EXAMINER: Initial if reference considered, whether or not citation is in conformance with MPEP 609; draw line through citation if not in conformance and not considered. Include copy of this form for next communication to the Applicant.	

FORM 1449* INFORMATION DISCLOSURE STATEMENT IN AN APPLICATION (Use several sheets if necessary)	Docket Number: 02316.2584US23	Application Number: NEW FILING
	Inventor: KOWALCZYK ET AL.	
	Filing Date: HEREWITH	Group Art Unit: UNKNOWN

		Plaintiff's Notice of Dismissal relating to Civil Action No. 5:11-cv-02509-JS, ADC Telecommunications, Inc v. Opterna Am, Inc. filed July 12, 2011 (1 page).
		Supplemental Notice of Allowability for application Serial No. 13/924,191 mailed March 10, 2014
		Supplemental Notice of Allowability for application Serial No. 13/924,191 mailed March 14, 2014
		SYSTIMAX® iPatch System Wins Platinum Network of the Year Award, Press Release, 30 January 2003, obtained from http://www.avaya.com/usa/about-avaya/newsroom/news-releases/2003/pr-030130a on 01/07/2009.
		TrueNet; TFP Series Rack Mount Fiber Panels, Spec Sheet; May 2008; 8 pages
		Value-Added Module System, ADC Telecommunications, Inc., © 1993, 1194, 1998, "12-Pack Module Assemblies", pp. 30-31
		Preliminary Response by Patent Owner Under 37 C.F.R. § 42.107, Case IPR2017-02122, Paper No. 6, 71 pages (December 22, 2017)
		Ex. 2001 - Declaration of Casimer DeCusatis in Support of Patent Owner's Preliminary Response, Case IPR2017-02122
		Ex. 2002 - Office Action Mailed 06/19/2009 in connection with U.S. Patent Application Serial No. 12/182,705
		Ex. 2003 -Response to 06/19/2009 Office Action in connection with U.S. Patent Application Serial No. 12/182,705
		Ex. 2004 -U.S. Patent Application Publication Number 2006/021 0230 ("Kline")
		Ex. 2005 -Excerpts from the Merriam-Webster's Collegiate Dictionary (Tenth Edition) (2000)
		Ex. 2006 -Excerpts from the New Oxford American Dictionary (Third Edition) (2010)

142510
PATENT TRADEMARK OFFICE

EXAMINER	DATE CONSIDERED

EXAMINER: Initial if reference considered, whether or not citation is in conformance with MPEP 609; draw line through citation if not in conformance and not considered. Include copy of this form for next communication to the Applicant.

*Substitute Disclosure Statement Form (PTO-1449) Patent and Trademark Office; U.S. DEPARTMENT OF COMMERCE

US 20060210230A1

(19) United States

(12) Patent Application Publication

(10) Pub. No.: US 2006/0210230 A1

(43) Pub. Date: Sep. 21, 2006

Kline et al.

(54) FIBER OPTIC STORING AND DISPENSING APPARATUS

(75) Inventors: **James R. Kline**, Petosky, MI (US); **Thomas J. Kline**, Petosky, MI (US); **Dustin S. Sene**, Emigrant, MO (US)

Correspondence Address:
Warn, Hoffmann, Miller, LaLone & McCulloch P.C.
5291 Colony Drive North
Saginaw, MI 48603 (US)

(73) Assignee: **Fiber Optic Cable Storage, Inc.**

(21) Appl. No.: **11/081,190**

(22) Filed: **Mar. 16, 2005**

Publication Classification

(51) **Int. Cl.**
G02B 6/00 (2006.01)

(52) **U.S. Cl.** **385/135**; 385/134

(57) **ABSTRACT**

Storage and dispensing apparatus for use with a unitary length of coilable fiber optic cable having a minimum bending radius, such apparatus having a casing within which is journaled a rotatable spool having two grooves in which relatively long and relatively short lengths of the cable may be coiled. One end of the cable is coupled to a connector that is releasably retained on the spool for rotation therewith. The opposite end of the cable is joined to a connector which is extendible from and retractable into the casing in which the spool is journaled. The casing is formed of rigid plastic material which protects the cable against damage from externally applied forces. No part of the cable within the casing is subject to being bent about a radius less than the minimum bending radius.

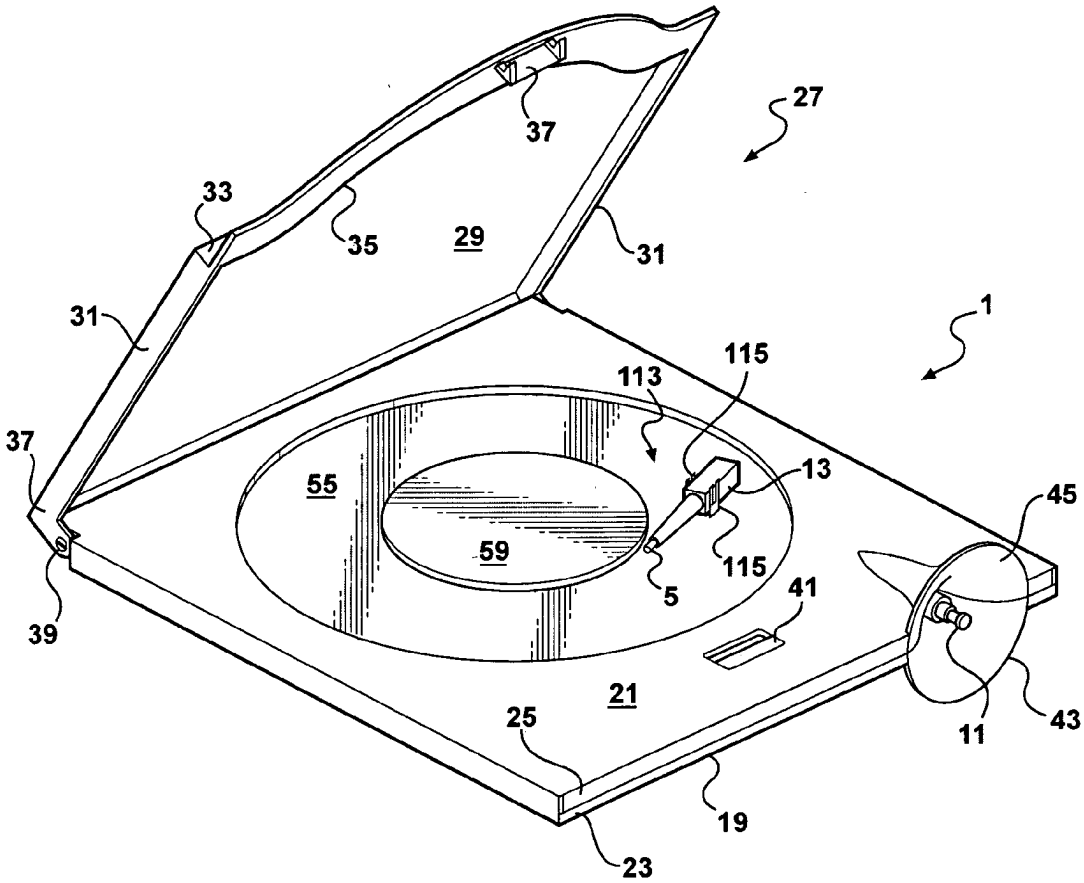

IPR2025-01119
Ex. 2004 1/10
Belden EX1023

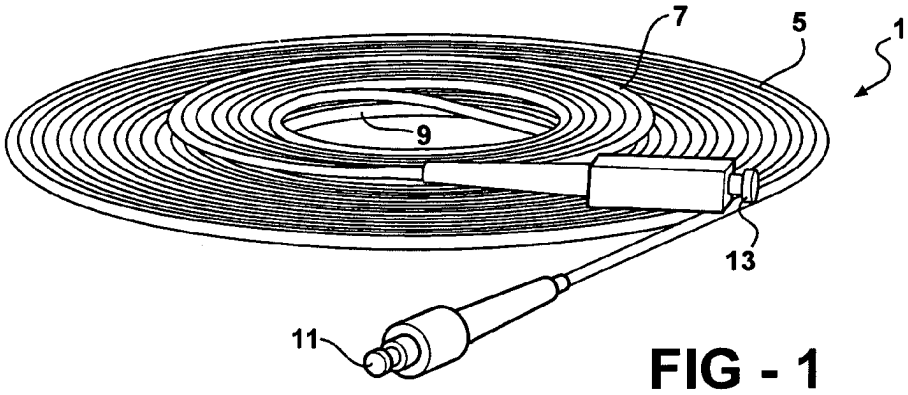

FIG - 1

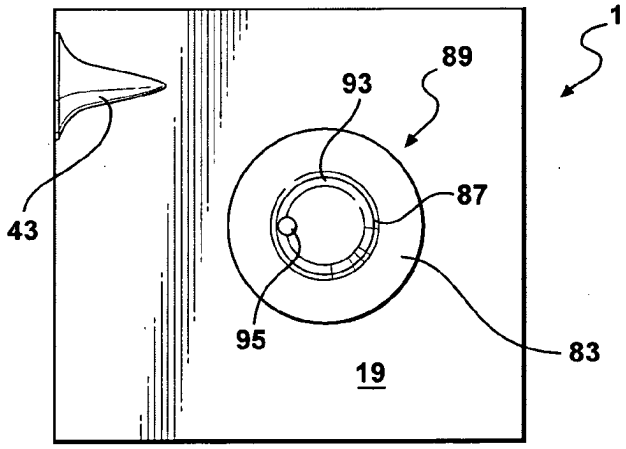

FIG - 2

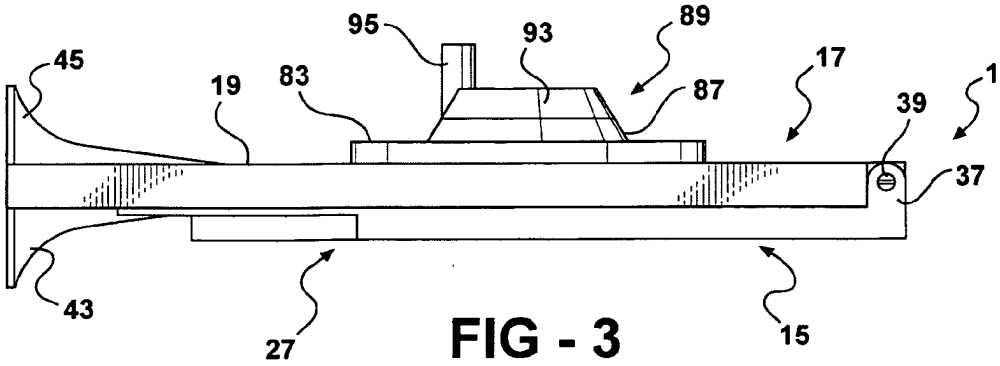

FIG - 3

IPR2025-01119
Ex. 2004 2/10
Belden EX1023

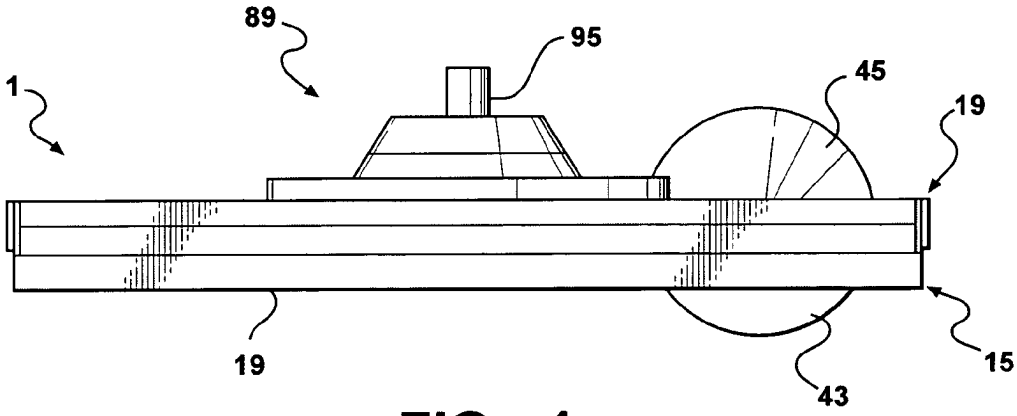

FIG - 4

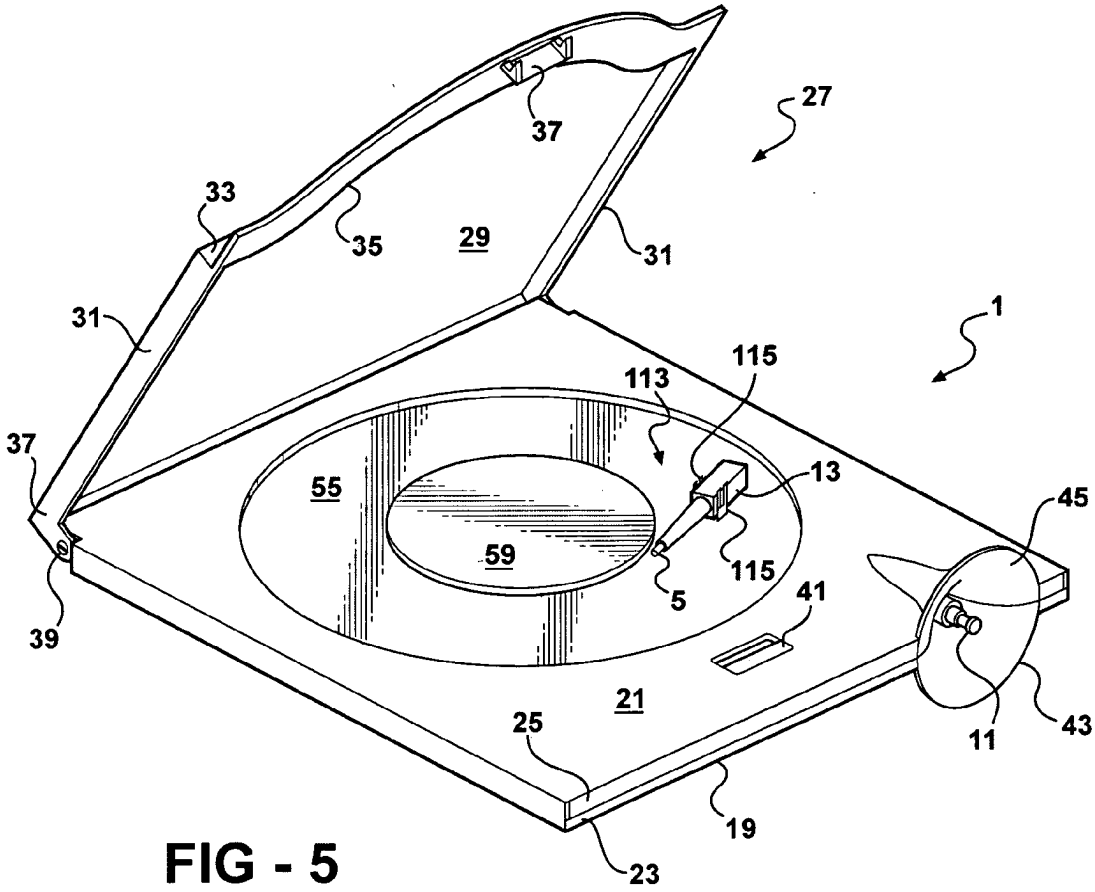

FIG - 5

IPR2025-01119
Ex. 2004 3/10
Belden EX1023

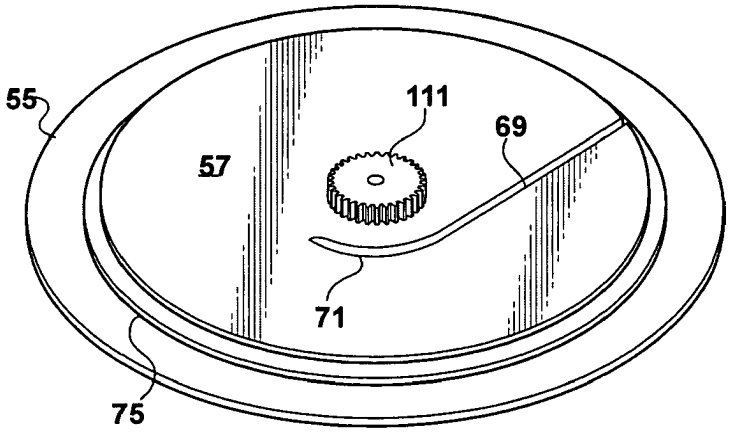

FIG - 6

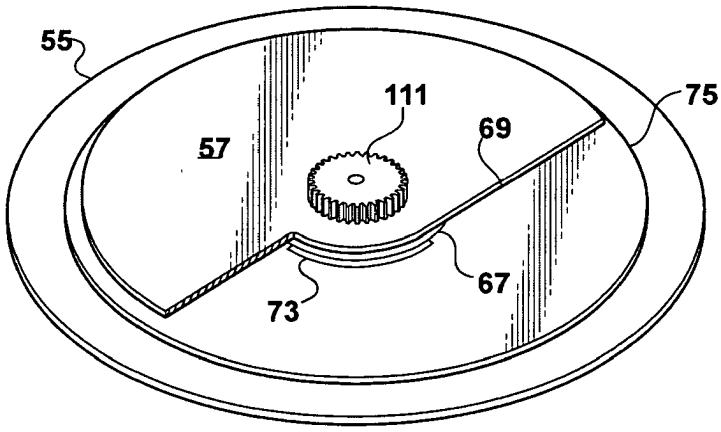

FIG - 7

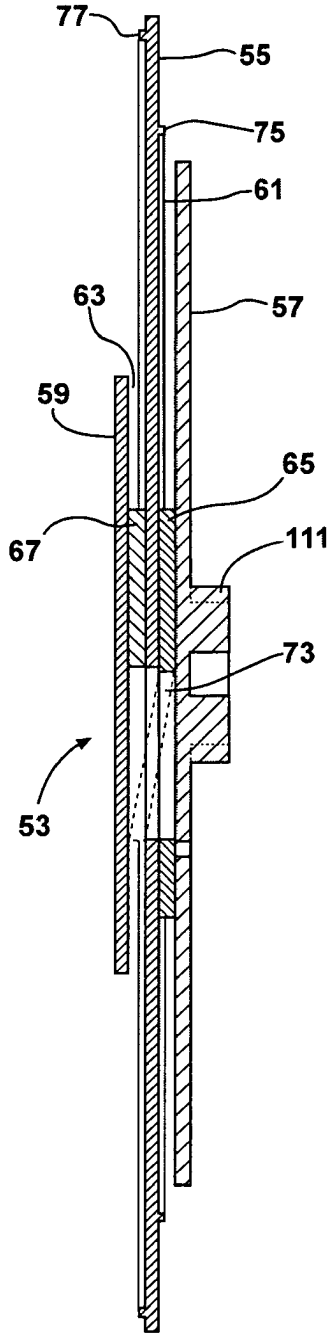

FIG - 10

IPR2025-01119
Ex. 2004 4/10
Belden EX1023

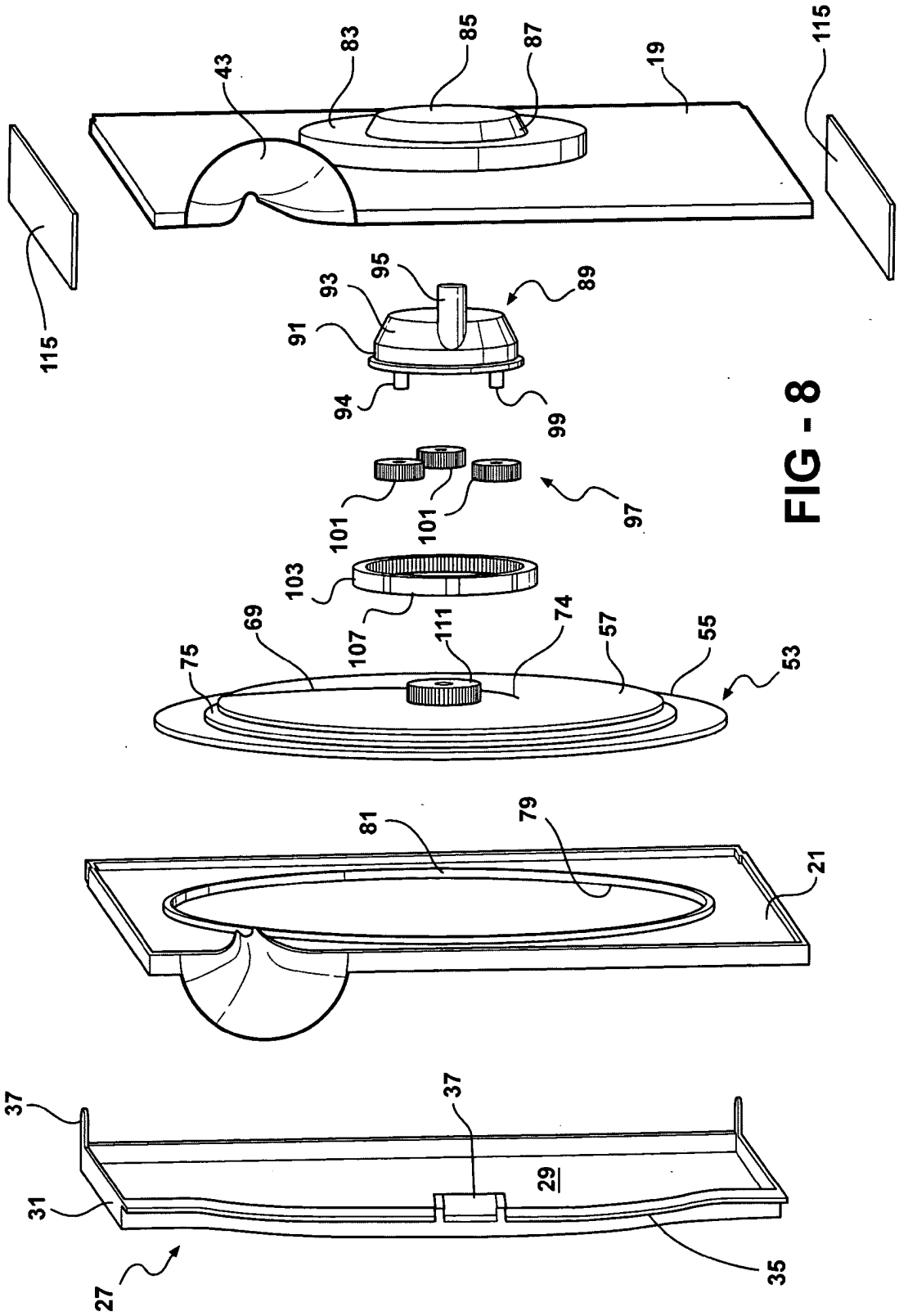

FIG - 8

IPR2025-01119
Ex. 2004 5/10
Belden EX1023

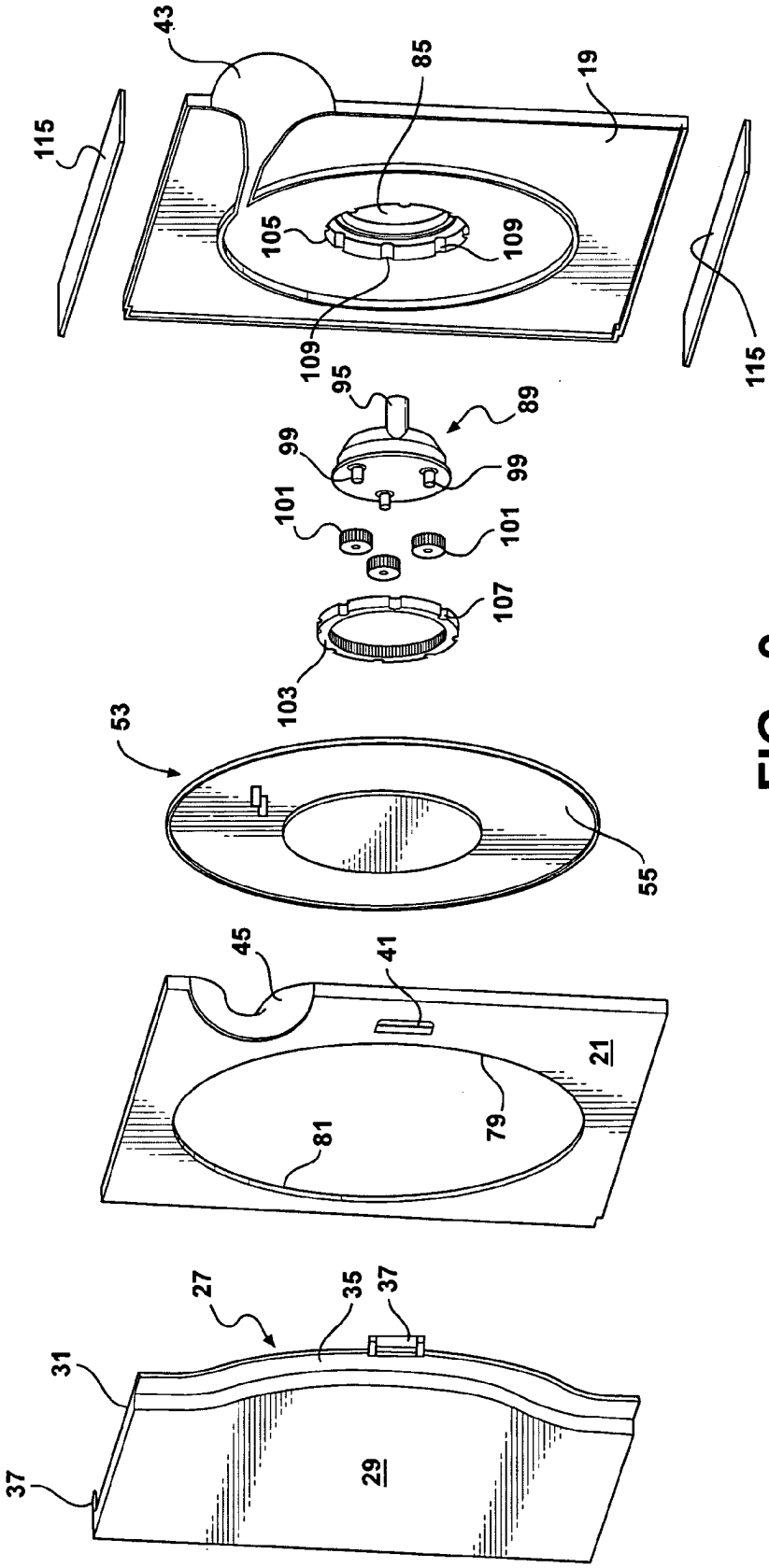

FIG - 9

IPR2025-01119
Ex. 2004 6/10
Belden EX1023

FIBER OPTIC STORING AND DISPENSING APPARATUS

[0001] This invention relates to apparatus for storing and dispensing coilable material, such as a fiber optic cable, in and from a protective casing.

BACKGROUND OF THE INVENTION

[0002] When installing, testing, maintaining, or tuning all ranges of fiber optic networks it is necessary to use various test sets. A test set ordinarily will include one or more fiber optic jumper cables for verifying the integrity of signal flow through various parts of the fiber optic circuit. The length of the fiber optic jumper cable depends on the distance that must be spanned by such cable.

[0003] A fiber optic jumper cable used for testing purposes in the field conventionally is accommodated for shipment in a transparent, flimsy, plastic storage bag. Conventionally, a jumper cable is wound about a radius of two inches or more to form a coil which is placed in the plastic bag without any additional protection against damage from externally applied forces, such as that resulting from being stepped on or struck by falling objects. The storage of a fiber optic cable in a flimsy plastic bag is undesirable because of the susceptibility to damage of such cable while accommodated in such bag.

[0004] A fiber optic jumper cable has certain known physical and optical characteristics, such as the cable diameter and its signal transmissivity attenuating properties. The attenuating properties usually are determined at about the time the cable is coiled without signal affecting bends for packaging, whereas the diameter of the cable determines the minimum radius about which the cable may be bent or wound to ensure against damaging the cable. These characteristics may be embraced by the term "minimum bending radius" which, as used herein, means the minimum radius about which a cable may be bent without subjecting the cable to physical damage or any appreciable loss of signal transmissivity.

[0005] When a field engineer extracts a coiled fiber optic jumper cable from the bag in which it is stored, it is common for the engineer to discard the plastic bag and manually uncoil and recoil the cable prior to and following its use. Manual uncoiling of the cable frequently causes the cable to become twisted or kinked, whereas manual recoiling of the cable subjects it to the possibility that it will be wound about a radius less than the minimum bending radius, thereby physically damaging the cable and adversely affect its ability to transmit an optical signal without undue attenuation.

[0006] In those instances in which the test set and a fiber optic jumper cable are shipped or stored in the same container, the cable is exposed to the possibility of damage by the test equipment itself.

[0007] The distance from the test set to the equipment under test varies in different testing environments. The current practice, therefore, requires the selection of a length of cable, which almost always is greater than the distance to be spanned, thereby resulting in excessive sagging of the cable between its ends and requiring the cable, after use, to be recoiled by hand resulting in uncertain bending radii and increasing the risk of damaging the cable.

[0008] A principal object of the invention is to provide apparatus which overcomes these disadvantages.

SUMMARY OF THE INVENTION

[0009] Apparatus constructed in accordance with the invention comprises a casing formed of rigid plastic material defining a hollow housing within which a unitary length of coilable material, such as a fiber optic cable, is supported for extension from and retraction into the housing. Within the housing is a spool about which the cable may be wound. The spool is mounted for rotation about an axis and has therein an annular, relatively deep primary groove and a secondary, relatively shallow groove alongside the primary groove. Accommodated in the primary groove is a coiled, relatively long length section of the cable, and accommodated in the secondary groove is a coiled, relatively short length of the same cable. The spool is rotatable about the axis of rotation by means of a crank and the rotation of the crank is transmitted to the spool by a geared transmission. The radius about which the cable is coiled is no less than the minimum bending radius of the cable, and no part of the cable is subjected to bending about a radius less than the minimum bending radius.

[0010] The grooves are formed by spaced apart side-by-side flanges, one of which is common to both grooves. An intermediary portion of cable passes from the primary groove in the spool to the secondary groove via a lateral passage adjacent the center of the spool and is guided in its transition between the grooves in such manner as to avoid kinking, twisting, or otherwise damaging the cable.

[0011] The cable has two opposite free ends at each of which is secured a fitting or connector. One connector passes through an aperture in the casing so as to enable a desired length of the cable in the primary groove of the spool to be unwound therefrom and extended from the casing a substantial distance. The second connector at the opposite end of the cable removably may be retained at one side of the spool by a retainer. The length of the cable section that extends from the axis of rotation of the spool to the second connector may be substantially less than that of the other section of the cable.

[0012] The casing preferably includes a pivoted door which may be opened and closed so as to enable that portion of the cable wound about the secondary spool groove to be accessed conveniently. When the door is closed, all of the parts within the casing, including both of the cable sections wound on the spool, will be protected by the casing against damage from external forces.

THE DRAWINGS

[0013] The presently preferred embodiment of the apparatus is illustrated in the accompanying drawings wherein:

[0014] **FIG. 1** is a an enlarged, isometric view of a typical fiber optic cable wound in such manner as to provide two coiled sections of different lengths, one of such coils overlying the other;

[0015] **FIG. 2** is a plan view of a casing in which the coiled cable may be stored;

[0016] **FIG. 3** is a reduced scale side elevational view of the casing;

[0017] **FIG. 4** is a view similar to **FIG. 3**, but with the casing rotated through 90°;

[0018] **FIG. 5** is an isometric view of the casing illustrating an access door in an open position, but omitting most of the cable;

[0019] **FIG. 6** is an isometric view illustrating one side of a spool on which the cable may be wound;

[0020] **FIG. 7** is a view similar to **FIG. 6**, but with parts broken away for clarity of illustration;

[0021] **FIG. 8** is an isometric, exploded view of the apparatus as viewed in one direction;

[0022] **FIG. 9** is a view similar to **FIG. 8**, but showing the apparatus from another direction; and

[0023] **FIG. 10** is an enlarged, vertical sectional view through the spool.

THE PREFERRED EMBODIMENT

[0024] Apparatus constructed in accordance with the presently preferred embodiment of the invention comprises a casing **1** formed from rigid plastic material, such as polycarbonate or that used in the manufacture of so-called jewel cases for compact discs and the like. The casing is adapted to contain a selected length of coilable material, such as a conventional, cladded fiber optic cable **3**. As shown in **FIG. 1** the cable **3** is a single, unitary cable having two coil sections **5** and **7** each of which is wound about a radius at least as great as the minimum bending radius of the cable. The section **5** has a length greater than that of the section **7**. The longer section **5** sometimes will be referred to herein as the primary section and the shorter section **7** as the secondary section. The cable includes an integral intermediate section **9** which forms a transition between the sections **5** and **7**. (The section **9** is lined in **FIG. 1** for clarity of illustration, but is identical to the remainder of the cable.) At one free end of the cable **3** is fixed a conventional fitting or connector **11** and at the opposite free end of the cable **3** is fixed a conventional fitting or connector **13**.

[0025] The casing has parallel panels **15** and **17** which confront one another and form a hollow housing. The two panels have overlying, parallel, spaced apart walls **19** and **21**. The walls include confronting flanges **23** and **25** which ultimately are welded or otherwise suitably secured to one another so as to establish and maintain the spacing of the panel walls **19** and **21** from one another. A cover **27** (best shown in **FIG. 5**) has a planar wall **29** having side flanges **31** and an end flange **33** which is joined to a planar flange **35** provided with a springy latch **37**. The side flanges **31** have fingers **37** provided with openings for the accommodation of pivot pins **39** carried by the wall **21**. The wall **21** also has a latch keeper **41** for the removable accommodation of the latch **37**. The arrangement is such that the cover **27** may be swung about the pivot pins **39** from an open position as shown in **FIG. 5** to a closed and latched position, as is shown in **FIGS. 2-4**.

[0026] The walls **19** and **21** are provided with overlying, circumferential, arcuate sections **43** and **45** and grooves **47** and **49**, respectively, which together form an inwardly tapering, bell-shaped inlet/outlet passage **50** in communication with the interior of the housing. The arcuate sections **43** and **45** are formed on radii which are no less than the minimum bending radius of the cable.

[0027] The apparatus includes a spool **53** on and from which the cable **3** may be wound and unwound. The spool has three side-by-side circular flanges **55**, **57**, and **59**, the flange **55** being sandwiched between the flanges **57** and **59** in spaced relation so as to form two annular grooves **61** and **63** for the accommodation of different sections of the cable **3**. Between the flanges **55** and **57** and adjacent the centers thereof is a circular hub section **65** and between the flanges **55** and **59** is a corresponding hub section **67**. The hub sections form the axis of rotation of the spool and also form the minimum radius about which the respective coil sections are wound, and such radius is at least as great as the minimum bending radius of the cable.

[0028] Since the diameter of the flange **57** is greater than that of the flange **59** the groove **61** has a depth greater than that of the groove **63**. The spool flange **57** has an abbreviated, substantially chordal slot **69** which extends inwardly from the peripheral edge and terminates in an arcuate guide slot section **71** which is formed on a radius corresponding to that of the hub **65**. The slot section **71** overlies an arcuate slit **73** formed in the center flange **55** adjacent the hub **67**. The slit **73** thus provides communication between the grooves **61** and **63** via a lateral passage **74**. The widths of the spool grooves, the slot **69**, the slot **71**, the slit **73**, and the passage **74** are such as freely to accommodate the cable **3**.

[0029] That face of the flange **55** which confronts the flange **57** has a circular stiffening rib **75**, and that face of the flange **55** which confronts the flange **59** has a circular stiffening rib **77** adjacent the periphery of the flange **55**.

[0030] The wall **21** of the casing has an opening **79** which provides access to the spool flange **59**. The rib **77** on that face of the flange **55** which confronts the flange **57** bears against the casing wall **21** and also provides a bearing surface for the spool **53**.

[0031] The wall **19** of the casing has an outwardly projecting chamber **83** at the center of which is an opening **85** encircled by a tapered journal flange **87**. Accommodated in the chamber **83** is a cylindrical crank **89** having a body at one side of which is a disc **91** and a tapered bearing surface **93** which is accommodated in the tapered flange **87**. The crank includes a handle **95** which extends through the opening **85** and beyond the casing wall a distance sufficient to enable an operator to rotate the crank by means of the handle **95**.

[0032] Drive transmission means **97** is provided for transmitting rotation of the crank **89** to the spool **53**. The transmission comprises three circumferentially spaced spindles **99** on which are journaled correspondingly spaced gears **101** which mesh with a ring gear **103** fitted into an opening **105** in the casing wall **19** which is concentric with the opening **85**. The ring gear **103** has circumferentially spaced external notches **107** which accommodate correspondingly spaced projections **109** extending radially inwardly from the edge of the opening **105**, thereby precluding rotation of the ring gear relative to the wall **19**. The gears **101** also mesh with a gear **111** fixed on the flange **57** so as to rotate with the spool **53** about its axis of rotation.

[0033] On the face of the spool flange **55** is secured a retainer **113** comprising a pair of spaced apart, springy

fingers **115** and between which the connector **13** at one free end of the cable **3** removably may be accommodated.

[**0034**] To condition the apparatus for operation, the free end of the shorter or secondary cable length **7**, prior to attaching the connector **13** thereto, is introduced to the slot **71** in the spool flange **57** and thence extended through the lateral passage **74** formed by the slit **73**. The deflection of the cable to enable it to extend through the passage **74** does not subject the cable to bending about a radius less than the minimum bending radius of the cable. The cable may be extended manually through the passage into and through the groove **63** until the intermediate cable section **9** occupies the passage **74**. When the intermediate section **9** of the cable occupies the passage, that portion of the cable which has passed through the passage may be wound in the groove **63** to form the secondary coil section **7**. Following the formation of the coil section **7** the connector **13** may be applied to the free end of the cable **3** and fitted into the retainer **113**.

[**0035**] The longer length of the cable **3** then may be wound about the hub in the spool groove **61** to form the primary coil **5**. The spool **53** then may be placed between the two casing halves with that portion of the cable **3** adjacent the connector **11** extending through the inlet passage **50** formed by the grooves **47** and **49**. The casing halves then may be sonic welded or otherwise secured to one another with the connector **13** occupying a stored position in the passage **50** between the parts **43** and **45**.

[**0036**] When it is desired to make use of the apparatus, the connector **11** may be withdrawn from the passage **50** and extended manually a desired distance from the casing. The extension of the connector **11** will cause some portion of the primary coil **5** to be unwound from the spool and the latter to rotate about its axis. The inlet passage **50** is so positioned that the movement of the cable through the inlet is along a path substantially tangential to the spool groove **61**, thereby avoiding bending the cable about a radius less than the minimum bending radius. Further, the curvature of the surfaces **43** and **45** is on a radius which is no smaller than the minimum bending radius of the cable, thereby ensuring that the cable will not be damaged by being bent too sharply, even if the cable hangs freely from the exit end of the inlet passage **50**.

[**0037**] During the unwinding of the cable from the primary coil **5** and the resulting rotation of the spool, the connector **13** at the opposite end of the cable will be retained in place on the spool flange **59** by the retainer **113**. Although the entire spool **53** will rotate, there will be no twisting of the cable transition section **9** or any other part of the cable. Consequently, there will be no twisting or kinking of any part of the cable.

[**0038**] Following extension of the cable from the primary coil **5** a desired distance, the cover **27** may be moved to its open position so as to expose the connector **13**. The connector may be removed from the retainer **113** and the adjacent part of the cable unwrapped manually from the secondary coil **7** via the spool groove **63** and extended the desired distance. The connectors **11** and **13** may be coupled to the power source (not shown) and the selected equipment unit (not shown).

[**0039**] It sometimes is convenient to mount the casing in a position other than upon the floor or ground. In many instances the junction box between the power source and the operating unit is formed of magnetically permeable metal. It is desirable, therefore, to adhesively apply magnetic strips **115** to opposite ends of the casing so as to provide a stable, removable support for the casing on the junction box or other magnetically permeable devices.

[**0040**] When the function of the jumper cable has been completed, the connector **13** at the free end of the cable section constituting the secondary coil **7** may be uncoupled from the unit to which it is connected, thereby enabling the cable to be rewound by hand in the groove **63** of the spool **53** while the spool remains stationary. When the secondary coil is fully rewound, the connector **13** may be returned to the retainer **113**. The connector **11** then may be uncoupled from the unit to which it was coupled and the crank **89** rotated in such direction as to wind the longer length section of the cable in the spool groove **61** via the inlet passage **50**. The gear transmission **97** illustrated is one which enables about a three to one ratio to be obtained between the crank and the spool. That is, for each revolution of the crank **89**, the spool **53** will be rotated about three revolutions. This accelerates the return of the longer length cable section to the casing.

[**0041**] As the connector **11** at the free end of the longer length cable section approaches the casing, the cable will be guided by the arcuate parts **43** and **45** so as to prevent deflection or bending of the cable about an arc less than the minimum bending radius even if the cable is whipped as the connector **11** approaches the casing.

[**0042**] The casing is so constructed that, as the cable is supported within the casing and as it is extended from and retracted into the casing, no part of the cable is subjected to bending about a radius less than the minimum bending radius of such cable.

[**0043**] Although the description of the invention has been concerned primarily with a fiber optic cable, it will be understood that the invention is not limited to use with such a cable. Instead, the invention is operable with any coilable material.

[**0044**] The disclosed embodiment is representative of a presently preferred form of the invention, but is intended to be illustrative rather than definitive thereof. The invention is defined in the claims.

We claim:

1. Apparatus for storing and dispensing a unitary length of coilable material, said apparatus comprising means forming a casing; a spool having a hub; and means mounting said spool in said housing for rotation about an axis formed by said hub, said spool having a pair of side-by-side annular grooves therein for the accommodation of different sections of such coilable material, said spool having a lateral passage adjacent said hub in communication with both of said grooves, said grooves and said passage being of such width as freely to accommodate the respective sections of said coilable material.

2. The apparatus according to claim 1 wherein said spool has a plurality of spaced apart flanges carried by said hub and defining said grooves, one of said flanges having a diameter greater than that of any other of said flanges thereby enabling said grooves to have different maximum depths.

3. The apparatus according to claim 2 wherein said passage is formed by a slit extending through that flange which is between said grooves.

4. The apparatus according to claim 3 including a slot in that flange which is adjacent the flange in which said slit is formed, said slot being in communication with said slit.

5. The apparatus according to claim 1 wherein said coilable material comprises an elongate fiber optic cable having a first length section coiled in one of said grooves, a second length section coiled in the other of said grooves, and an intermediate section extending through said passage.

6. The apparatus according to claim 5 wherein said first length section has a length greater than that of said second length section.

7. The apparatus according to claim 6 including a fitting at each end of said cable, the fittings at the ends of said first and second length sections being extensible and retractable respectively relative to said casing in response to uncoiling of said first and second length sections from said spool and coiling said first and second length sections on said spool.

8. Apparatus for storing and dispensing a fiber optic cable of selected length and having a minimum bending radius, said apparatus comprising a spool having a hub; flanges carried by said hub forming a pair of side-by-side annular grooves; means mounting said spool for rotation about an axis, said spool having a lateral diagonal passage adjacent said hub in communication with both of said grooves; and an elongate, unitary fiber optic cable of selected length, a first length section of said cable being windable and unwindable in and from one of said grooves, a second length section of said cable being windable and unwindable in and from the other of said grooves, and an intermediate length section of said cable extending through said passage.

9. The apparatus according to claim 8 wherein said passage is adjacent said hub.

10. The apparatus according to claim 8 wherein said first length section is longer than said second length section.

11. The apparatus according to claim 8 wherein one of said grooves has a depth greater than that of the other of said grooves.

12. The apparatus according to claim 8 wherein no part of said cable within said casing is bent about a radius less than said minimum bending radius.

13. The combination of a unitary length of coilable material and a casing in which said material may be stored in coiled condition, said casing comprising a housing; a spool having a plurality of spaced flanges forming two side-by-side annular grooves, one of said flanges being common to both of said grooves; a hub extending laterally of said casing, said one of said flanges having a passage therethrough in communication with both of said grooves; and means mounting said spool in said casing for rotation about an axis extending through said hub, said coilable material having a first length section wound about said hub to form a first coil occupying one of said grooves, said coilable material having a second length section wound about said hub to form a second coil occupying the other of said grooves, said coilable material having an intermediate section between said first and second sections extending from one of said grooves to the other of said grooves via said passage, said casing having an inlet through which a selected portion of one of said length sections may pass from said first coil for extension from said casing, a selected portion of the other of said length sections being unwindable from the other of said grooves and from said second coil for extension from said casing.

14. The combination according to claim 13 including rotatable crank means; and gear transmission means coupling said crank means and said spool for rotating the latter in response to rotation of said crank means.

15. The combination according to claim 14 wherein said coilable material has a minimum bending radius and wherein said inlet has arcuate surfaces engageable by said coilable material, said arcuate surfaces being formed on a radius at least as great as said minimum bending radius.

16. The combination according to claim 13 wherein one of said length sections is longer than the other of said length sections.

17. The combination according to claim 16 wherein one of said grooves has a depth greater than that of the other of said grooves and wherein the longer length section is accommodated in the groove having the greater depth.

18. The combination according to claim 13 wherein one of said flanges has a peripheral edge from which a slot extends toward and communicates with said passage.

19. The combination according to claim 13 wherein each of said first and said second length sections has a free end, one of said flanges having retainer means for releasably retaining the free end of said other of said length sections.

20. The combination according to claim 13 wherein said coilable material has a minimum bending radius and wherein no part of said coilable material within said casing is bent on a radius less than said minimum bending radius.

* * * * *

Electronic Patent Application Fee Transmittal

Application Number:	
Filing Date:	
Title of Invention:	FIBER OPTIC ENCLOSURE WITH INTERNAL CABLE SPOOL
First Named Inventor/Applicant Name:	Scott C. Kowalczyk
Filer:	David G. Schmaltz/Aimee Stevens
Attorney Docket Number:	02316.2584US23/ADC003176

Filed as Large Entity

Filing Fees for Utility under 35 USC 111(a)

Description	Fee Code	Quantity	Amount	Sub-Total in USD($)
Basic Filing:				
UTILITY APPLICATION FILING	1011	1	300	300
UTILITY SEARCH FEE	1111	1	660	660
UTILITY EXAMINATION FEE	1311	1	760	760
Pages:				
Claims:				
CLAIMS IN EXCESS OF 20	1202	4	100	400
Miscellaneous-Filing:				
Petition:				

Description	Fee Code	Quantity	Amount	Sub-Total in USD($)
Patent-Appeals-and-Interference:				
Post-Allowance-and-Post-Issuance:				
Extension-of-Time:				
Miscellaneous:				
			Total in USD ($)	**2120**

Electronic Acknowledgement Receipt

EFS ID:	31554764
Application Number:	15875605
International Application Number:	
Confirmation Number:	4897
Title of Invention:	FIBER OPTIC ENCLOSURE WITH INTERNAL CABLE SPOOL
First Named Inventor/Applicant Name:	Scott C. Kowalczyk
Customer Number:	142510
Filer:	David G. Schmaltz/Aimee Stevens
Filer Authorized By:	David G. Schmaltz
Attorney Docket Number:	02316.2584US23/ADC003176
Receipt Date:	19-JAN-2018
Filing Date:	
Time Stamp:	16:26:06
Application Type:	Utility under 35 USC 111(a)

Payment information:

Submitted with Payment	yes
Payment Type	CARD
Payment was successfully received in RAM	$2120
RAM confirmation Number	012218INTEFSW16275201
Deposit Account	132725
Authorized User	Aimee Stevens

The Director of the USPTO is hereby authorized to charge indicated fees and credit any overpayment as follows:

37 CFR 1.16 (National application filing, search, and examination fees)

37 CFR 1.17 (Patent application and reexamination processing fees)

37 CFR 1.21 (Miscellaneous fees and charges)

File Listing:

Document Number	Document Description	File Name	File Size(Bytes)/ Message Digest	Multi Part /.zip	Pages (if appl.)
1	Application Data Sheet	2018-01-19-ADS-02316-2584US23.PDF	1823794 a8eb9dd93acc17a7448b7938283ad6509d4aff5f	no	10
Warnings:					
Information:					
2		2018-01-19-CONTINUATION-APP-02316-2584US23-ADC003176.PDF	100805 2fa1257861f78094b66df93707a3b4c94af7afea	yes	18

Multipart Description/PDF files in .zip description

Document Description	Start	End
Specification	1	12
Claims	13	17
Abstract	18	18

Warnings:					
Information:					
3	Drawings-only black and white line drawings	2018-01-19-Drawings-02316-2584US23-ADC003176.PDF	251296 9858f645c064016d896b767eaa745ead9df2e3d6	no	14
Warnings:					
Information:					
4	Oath or Declaration filed	Signed-Declaration-from-Parent-Kowalczyk-02316-2584US23.PDF	76866 708c7736ed0df56d8e7207e8807c2cb312b4da07	no	1
Warnings:					
Information:					
5	Oath or Declaration filed	Signed-Declaration-from-Parent-Coan-02316-2584US23.PDF	161143 d8f5917e58a62895019d5474f86efe9934920758	no	2

Warnings:					
Information:					
6	Oath or Declaration filed	Signed-Declaration-from-Parent-Kaml-02316-2584US23.PDF	74762 b025b2c04332f176ad0ff08e493ba5c40f9c2f18	no	1
Warnings:					
Information:					
7	Information Disclosure Statement (IDS) Form (SB08)	2018-01-19-IDS-02316-2584US23.PDF	301182 068e9c1aeae82cc1819356743266a2b507766658	no	17
Warnings:					
Information:					
This is not an USPTO supplied IDS fillable form					
8	Non Patent Literature	Preliminary-Response-by-Patent-Owner.PDF	732826 6752c45c53ec8cf1899d3c43fe90c7e5cdaee6b2	no	71
Warnings:					
Information:					
9	Non Patent Literature	Ex-2001.PDF	530232 7947e41cb3732da10618ae56465c1eff34d62b38	no	37
Warnings:					
Information:					
10	Non Patent Literature	Ex-2002.PDF	884145 b1160e509e86847d06d657b0654e25129f01dfa2	no	12
Warnings:					
Information:					
11	Non Patent Literature	Ex-2003.PDF	1059589 778f9c727f5b1704005100308d5490a1a4aeb8e4	no	14
Warnings:					
Information:					
12	Non Patent Literature	Ex-2004.PDF	2206656 bcda0aef8cd87a77afe9172e525de3e4450fc165	no	10
Warnings:					

Information:					
13	Non Patent Literature	Ex-2005.PDF	2266761 21a041480638a3b9269afa7cf8252faa00f0f43f	no	4
Warnings:					
Information:					
14	Non Patent Literature	Ex-2006.PDF	1836595 c8fdf73e89bba739e43414c0cc730ef959ad1fae	no	4
Warnings:					
Information:					
15	Fee Worksheet (SB06)	fee-info.pdf	36990 827ec10a5c4d191ea1699064f45f590a7da478f2	no	2
Warnings:					
Information:					
			Total Files Size (in bytes):	12343642	

This Acknowledgement Receipt evidences receipt on the noted date by the USPTO of the indicated documents, characterized by the applicant, and including page counts, where applicable. It serves as evidence of receipt similar to a Post Card, as described in MPEP 503.

<u>New Applications Under 35 U.S.C. 111</u>
If a new application is being filed and the application includes the necessary components for a filing date (see 37 CFR 1.53(b)-(d) and MPEP 506), a Filing Receipt (37 CFR 1.54) will be issued in due course and the date shown on this Acknowledgement Receipt will establish the filing date of the application.
<u>National Stage of an International Application under 35 U.S.C. 371</u>
If a timely submission to enter the national stage of an international application is compliant with the conditions of 35 U.S.C. 371 and other applicable requirements a Form PCT/DO/EO/903 indicating acceptance of the application as a national stage submission under 35 U.S.C. 371 will be issued in addition to the Filing Receipt, in due course.
<u>New International Application Filed with the USPTO as a Receiving Office</u>
If a new international application is being filed and the international application includes the necessary components for an international filing date (see PCT Article 11 and MPEP 1810), a Notification of the International Application Number and of the International Filing Date (Form PCT/RO/105) will be issued in due course, subject to prescriptions concerning national security, and the date shown on this Acknowledgement Receipt will establish the international filing date of the application.

PTO/AIA/14 (11-15)
Approved for use through 04/30/2017. OMB 0651-0032
U.S. Patent and Trademark Office; U.S. DEPARTMENT OF COMMERCE
Under the Paperwork Reduction Act of 1995, no persons are required to respond to a collection of information unless it contains a valid OMB control number.

Application Data Sheet 37 CFR 1.76	Attorney Docket Number	02316.2584US23/ADC003176
	Application Number	
Title of Invention	FIBER OPTIC ENCLOSURE WITH INTERNAL CABLE SPOOL	

The application data sheet is part of the provisional or nonprovisional application for which it is being submitted. The following form contains the bibliographic data arranged in a format specified by the United States Patent and Trademark Office as outlined in 37 CFR 1.76.
This document may be completed electronically and submitted to the Office in electronic format using the Electronic Filing System (EFS) or the document may be printed and included in a paper filed application.

Secrecy Order 37 CFR 5.2:

☐ Portions or all of the application associated with this Application Data Sheet may fall under a Secrecy Order pursuant to 37 CFR 5.2 (Paper filers only. Applications that fall under Secrecy Order may not be filed electronically.)

Inventor Information:

Inventor 1 Remove

Legal Name

Prefix	Given Name	Middle Name	Family Name	Suffix
	Scott	C.	Kowalczyk	

Residence Information (Select One) ● US Residency Non US Residency Active US Military Service

City	Savage	State/Province	MN	Country of Residence i	US

Mailing Address of Inventor:

Address 1	7628 Southridge Court
Address 2	
City	Savage
State/Province	MN
Postal Code	55378
Country i	US

Inventor 2 Remove

Legal Name

Prefix	Given Name	Middle Name	Family Name	Suffix
	Jonathan	Walter	Coan	

Residence Information (Select One) ◉ US Residency Non US Residency Active US Military Service

City	Savage	State/Province	MN	Country of Residence i	US

Mailing Address of Inventor:

Address 1	9232 West 126th Street
Address 2	
City	Savage
State/Province	MN
Postal Code	55378
Country i	US

Inventor 3 Remove

Legal Name

Prefix	Given Name	Middle Name	Family Name	Suffix
	Jonathan	R.	Kaml	

Residence Information (Select One) ◉ US Residency Non US Residency Active US Military Service

IPR2025-01119
Belden EX1023

Under the Paperwork Reduction Act of 1995, no persons are required to respond to a collection of information unless it contains a valid OMB control number.

Application Data Sheet 37 CFR 1.76	Attorney Docket Number	02316.2584US23/ADC003176
	Application Number	
Title of Invention	FIBER OPTIC ENCLOSURE WITH INTERNAL CABLE SPOOL	

City	Shakopee	State/Province	MN	Country of Residence i	US

Mailing Address of Inventor:

Address 1	2360 Vierling Drive East		
Address 2			
City	Shakopee	**State/Province**	MN
Postal Code	55379	**Country** i	US

All Inventors Must Be Listed - Additional Inventor Information blocks may be generated within this form by selecting the **Add** button. Add

Correspondence Information:

Enter either Customer Number or complete the Correspondence Information section below. For further information see 37 CFR 1.33(a).

☐ **An Address is being provided for the correspondence Information of this application.**

Customer Number	142510		
Email Address		Add Email	Remove Email

Application Information:

Title of the Invention	FIBER OPTIC ENCLOSURE WITH INTERNAL CABLE SPOOL		
Attorney Docket Number	02316.2584US23/ADC003176	**Small Entity Status Claimed**	☐
Application Type	Nonprovisional		
Subject Matter	Utility		
Total Number of Drawing Sheets (if any)	14	**Suggested Figure for Publication (if any)**	

Filing By Reference:

Only complete this section when filing an application by reference under 35 U.S.C. 111(c) and 37 CFR 1.57(a). Do not complete this section if application papers including a specification and any drawings are being filed. Any domestic benefit or foreign priority information must be provided in the appropriate section(s) below (i.e., "Domestic Benefit/National Stage Information" and "Foreign Priority Information").

For the purposes of a filing date under 37 CFR 1.53(b), the description and any drawings of the present application are replaced by this reference to the previously filed application, subject to conditions and requirements of 37 CFR 1.57(a).

Application number of the previously filed application	Filing date (YYYY-MM-DD)	Intellectual Property Authority or Country i

Publication Information:

☐ Request Early Publication (Fee required at time of Request 37 CFR 1.219)

☐ **Request Not to Publish.** I hereby request that the attached application not be published under 35 U.S.C. 122(b) and certify that the invention disclosed in the attached application **has not and will not** be the subject of an application filed in another country, or under a multilateral international agreement, that requires publication at eighteen months after filing.

Under the Paperwork Reduction Act of 1995, no persons are required to respond to a collection of information unless it contains a valid OMB control number.

Application Data Sheet 37 CFR 1.76	Attorney Docket Number	02316.2584US23/ADC003176
	Application Number	
Title of Invention	FIBER OPTIC ENCLOSURE WITH INTERNAL CABLE SPOOL	

Representative Information:

Representative information should be provided for all practitioners having a power of attorney in the application. Providing this information in the Application Data Sheet does not constitute a power of attorney in the application (see 37 CFR 1.32).
Either enter Customer Number or complete the Representative Name section below. If both sections are completed the customer Number will be used for the Representative Information during processing.

Please Select One:	● Customer Number	US Patent Practitioner	◯ Limited Recognition (37 CFR 11.9)
Customer Number	142510		

Domestic Benefit/National Stage Information:

This section allows for the applicant to either claim benefit under 35 U.S.C. 119(e), 120, 121, 365(c), or 386(c) or indicate National Stage entry from a PCT application. Providing benefit claim information in the Application Data Sheet constitutes the specific reference required by 35 U.S.C. 119(e) or 120, and 37 CFR 1.78.
When referring to the current application, please leave the "Application Number" field blank.

Prior Application Status	Pending		Remove
Application Number	Continuity Type	Prior Application Number	Filing or 371(c) Date (YYYY-MM-DD)
	Continuation of	15/470311	2017-03-27

Prior Application Status	Patented				Remove
Application Number	Continuity Type	Prior Application Number	Filing Date (YYYY-MM-DD)	Patent Number	Issue Date (YYYY-MM-DD)
15/470311	Continuation of	14/979870	2015-12-28	9606319	2017-03-28

Prior Application Status	Patented				Remove
Application Number	Continuity Type	Prior Application Number	Filing Date (YYYY-MM-DD)	Patent Number	Issue Date (YYYY-MM-DD)
14/979870	Continuation of	14/539459	2014-11-12	9261666	2016-02-16

Prior Application Status	Patented				Remove
Application Number	Continuity Type	Prior Application Number	Filing Date (YYYY-MM-DD)	Patent Number	Issue Date (YYYY-MM-DD)
14/539459	Continuation of	14/132691	2013-12-18	8891931	2014-11-18

Prior Application Status	Patented				Remove
Application Number	Continuity Type	Prior Application Number	Filing Date (YYYY-MM-DD)	Patent Number	Issue Date (YYYY-MM-DD)
14/132691	Continuation of	13/924191	2013-06-21	8705929	2014-04-22

Under the Paperwork Reduction Act of 1995, no persons are required to respond to a collection of information unless it contains a valid OMB control number.

Application Data Sheet 37 CFR 1.76	Attorney Docket Number	02316.2584US23/ADC003176
	Application Number	
Title of Invention	FIBER OPTIC ENCLOSURE WITH INTERNAL CABLE SPOOL	

Prior Application Status	Patented				Remove
Application Number	Continuity Type	Prior Application Number	Filing Date (YYYY-MM-DD)	Patent Number	Issue Date (YYYY-MM-DD)
13/924191	Continuation of	13/479015	2012-05-23	8494333	2013-07-23
Prior Application Status	Patented				Remove
Application Number	Continuity Type	Prior Application Number	Filing Date (YYYY-MM-DD)	Patent Number	Issue Date (YYYY-MM-DD)
13/479015	Continuation of	13/032337	2011-02-22	8189984	2012-05-29
Prior Application Status	Patented				Remove
Application Number	Continuity Type	Prior Application Number	Filing Date (YYYY-MM-DD)	Patent Number	Issue Date (YYYY-MM-DD)
13/032337	Continuation of	12/793556	2010-06-03	7894701	2011-02-22
Prior Application Status	Patented				Remove
Application Number	Continuity Type	Prior Application Number	Filing Date (YYYY-MM-DD)	Patent Number	Issue Date (YYYY-MM-DD)
12/793556	Continuation of	12/182705	2008-07-30	7756379	2010-07-13
Prior Application Status	Expired				Remove
Application Number	Continuity Type	Prior Application Number	Filing or 371(c) Date (YYYY-MM-DD)		
12/182705	Claims benefit of provisional	61/029248	2008-02-15		
Prior Application Status	Expired				Remove
Application Number	Continuity Type	Prior Application Number	Filing or 371(c) Date (YYYY-MM-DD)		
12/182705	Claims benefit of provisional	60/954214	2007-08-06		

Additional Domestic Benefit/National Stage Data may be generated within this form by selecting the **Add** button. Add

Foreign Priority Information:

This section allows for the applicant to claim priority to a foreign application. Providing this information in the application data sheet constitutes the claim for priority as required by 35 U.S.C. 119(b) and 37 CFR 1.55. When priority is claimed to a foreign application that is eligible for retrieval under the priority document exchange program (PDX)[i] the information will be used by the Office to automatically attempt retrieval pursuant to 37 CFR 1.55(i)(1) and (2). Under the PDX program, applicant bears the ultimate responsibility for ensuring that a copy of the foreign application is received by the Office from the participating foreign intellectual property office, or a certified copy of the foreign priority application is filed, within the time period specified in 37 CFR 1.55(g)(1).

Remove

Application Number	Country[i]	Filing Date (YYYY-MM-DD)	Access Code[i] (if applicable)

Under the Paperwork Reduction Act of 1995, no persons are required to respond to a collection of information unless it contains a valid OMB control number.

Application Data Sheet 37 CFR 1.76	Attorney Docket Number	02316.2584US23/ADC003176
	Application Number	
Title of Invention	FIBER OPTIC ENCLOSURE WITH INTERNAL CABLE SPOOL	

Additional Foreign Priority Data may be generated within this form by selecting the **Add** button. Add

Statement under 37 CFR 1.55 or 1.78 for AIA (First Inventor to File) Transition Applications

☐ This application (1) claims priority to or the benefit of an application filed before March 16, 2013 and (2) also contains, or contained at any time, a claim to a claimed invention that has an effective filing date on or after March 16, 2013.
NOTE: By providing this statement under 37 CFR 1.55 or 1.78, this application, with a filing date on or after March 16, 2013, will be examined under the first inventor to file provisions of the AIA.

Under the Paperwork Reduction Act of 1995, no persons are required to respond to a collection of information unless it contains a valid OMB control number.

Application Data Sheet 37 CFR 1.76	Attorney Docket Number	02316.2584US23/ADC003176
	Application Number	
Title of Invention	FIBER OPTIC ENCLOSURE WITH INTERNAL CABLE SPOOL	

Authorization or Opt-Out of Authorization to Permit Access:

When this Application Data Sheet is properly signed and filed with the application, applicant has provided written authority to permit a participating foreign intellectual property (IP) office access to the instant application-as-filed (see paragraph A in subsection 1 below) and the European Patent Office (EPO) access to any search results from the instant application (see paragraph B in subsection 1 below).

Should applicant choose not to provide an authorization identified in subsection 1 below, applicant **must opt-out** of the authorization by checking the corresponding box A or B or both in subsection 2 below.

NOTE: This section of the Application Data Sheet is **ONLY** reviewed and processed with the **INITIAL** filing of an application. After the initial filing of an application, an Application Data Sheet cannot be used to provide or rescind authorization for access by a foreign IP office(s). Instead, Form PTO/SB/39 or PTO/SB/69 must be used as appropriate.

1. Authorization to Permit Access by a Foreign Intellectual Property Office(s)

A. Priority Document Exchange (PDX) - Unless box A in subsection 2 (opt-out of authorization) is checked, the undersigned hereby **grants the USPTO authority** to provide the European Patent Office (EPO), the Japan Patent Office (JPO), the Korean Intellectual Property Office (KIPO), the State Intellectual Property Office of the People's Republic of China (SIPO), the World Intellectual Property Organization (WIPO), and any other foreign intellectual property office participating with the USPTO in a bilateral or multilateral priority document exchange agreement in which a foreign application claiming priority to the instant patent application is filed, access to: (1) the instant patent application-as-filed and its related bibliographic data, (2) any foreign or domestic application to which priority or benefit is claimed by the instant application and its related bibliographic data, and (3) the date of filing of this Authorization. See 37 CFR 1.14(h)(1).

B. Search Results from U.S. Application to EPO - Unless box B in subsection 2 (opt-out of authorization) is checked, the undersigned hereby **grants the USPTO authority** to provide the EPO access to the bibliographic data and search results from the instant patent application when a European patent application claiming priority to the instant patent application is filed. See 37 CFR 1.14(h)(2).

The applicant is reminded that the EPO's Rule 141(1) EPC (European Patent Convention) requires applicants to submit a copy of search results from the instant application without delay in a European patent application that claims priority to the instant application.

2. Opt-Out of Authorizations to Permit Access by a Foreign Intellectual Property Office(s)

☐ A. Applicant **DOES NOT** authorize the USPTO to permit a participating foreign IP office access to the instant application-as-filed. If this box is checked, the USPTO will not be providing a participating foreign IP office with any documents and information identified in subsection 1A above.

☐ B. Applicant **DOES NOT** authorize the USPTO to transmit to the EPO any search results from the instant patent application. If this box is checked, the USPTO will not be providing the EPO with search results from the instant application.

NOTE: Once the application has published or is otherwise publicly available, the USPTO may provide access to the application in accordance with 37 CFR 1.14.

Under the Paperwork Reduction Act of 1995, no persons are required to respond to a collection of information unless it contains a valid OMB control number.

Application Data Sheet 37 CFR 1.76	Attorney Docket Number	02316.2584US23/ADC003176
	Application Number	
Title of Invention	FIBER OPTIC ENCLOSURE WITH INTERNAL CABLE SPOOL	

Applicant Information:

Providing assignment information in this section does not substitute for compliance with any requirement of part 3 of Title 37 of CFR to have an assignment recorded by the Office.

Applicant 1 Remove

If the applicant is the inventor (or the remaining joint inventor or inventors under 37 CFR 1.45), this section should not be completed. The information to be provided in this section is the name and address of the legal representative who is the applicant under 37 CFR 1.43; or the name and address of the assignee, person to whom the inventor is under an obligation to assign the invention, or person who otherwise shows sufficient proprietary interest in the matter who is the applicant under 37 CFR 1.46. If the applicant is an applicant under 37 CFR 1.46 (assignee, person to whom the inventor is obligated to assign, or person who otherwise shows sufficient proprietary interest) together with one or more joint inventors, then the joint inventor or inventors who are also the applicant should be identified in this section.

Clear

● Assignee	Legal Representative under 35 U.S.C. 117	Joint Inventor
Person to whom the inventor is obligated to assign.	Person who shows sufficient proprietary interest	

If applicant is the legal representative, indicate the authority to file the patent application, the inventor is:

Name of the Deceased or Legally Incapacitated Inventor:

If the Applicant is an Organization check here. ☒

Organization Name	CommScope Technologies LLC		
Mailing Address Information For Applicant:			
Address 1	1100 CommScope Place SE		
Address 2			
City	Hickory	**State/Province**	NC
Country	US	Postal Code	28602
Phone Number		Fax Number	
Email Address			

Additional Applicant Data may be generated within this form by selecting the Add button. Add

Assignee Information including Non-Applicant Assignee Information:

Providing assignment information in this section does not substitute for compliance with any requirement of part 3 of Title 37 of CFR to have an assignment recorded by the Office.

Under the Paperwork Reduction Act of 1995, no persons are required to respond to a collection of information unless it contains a valid OMB control number.

Application Data Sheet 37 CFR 1.76	Attorney Docket Number	02316.2584US23/ADC003176
	Application Number	
Title of Invention	FIBER OPTIC ENCLOSURE WITH INTERNAL CABLE SPOOL	

Assignee 1

Complete this section if assignee information, including non-applicant assignee information, is desired to be included on the patent application publication. An assignee-applicant identified in the "Applicant Information" section will appear on the patent application publication as an applicant. For an assignee-applicant, complete this section only if identification as an assignee is also desired on the patent application publication.

Remove

If the Assignee or Non-Applicant Assignee is an Organization check here. ☐

Prefix	**Given Name**	Middle Name	**Family Name**	Suffix

Mailing Address Information For Assignee including Non-Applicant Assignee:

Address 1			
Address 2			
City		**State/Province**	
Country i		Postal Code	
Phone Number		Fax Number	
Email Address			

Additional Assignee or Non-Applicant Assignee Data may be generated within this form by selecting the Add button. Add

Signature:

Remove

NOTE: This Application Data Sheet must be signed in accordance with 37 CFR 1.33(b). **However, if this Application Data Sheet is submitted with the INITIAL filing of the application and either box A or B is not checked in subsection 2 of the "Authorization or Opt-Out of Authorization to Permit Access" section, then this form must also be signed in accordance with 37 CFR 1.14(c).**

This Application Data Sheet **must** be signed by a patent practitioner if one or more of the applicants is a **juristic entity** (e.g., corporation or association). If the applicant is two or more joint inventors, this form must be signed by a patent practitioner, **all** joint inventors who are the applicant, or one or more joint inventor-applicants who have been given power of attorney (e.g., see USPTO Form PTO/AIA/81) on behalf of **all** joint inventor-applicants.

See 37 CFR 1.4(d) for the manner of making signatures and certifications.

Signature	/David G. Schmaltz/			Date (YYYY-MM-DD)	2018-01-19
First Name	David G.	Last Name	Schmaltz	Registration Number	39828

Additional Signature may be generated within this form by selecting the Add button. Add

Application Data Sheet 37 CFR 1.76	Attorney Docket Number	02316.2584US23/ADC003176
	Application Number	
Title of Invention	FIBER OPTIC ENCLOSURE WITH INTERNAL CABLE SPOOL	

This collection of information is required by 37 CFR 1.76. The information is required to obtain or retain a benefit by the public which is to file (and by the USPTO to process) an application. Confidentiality is governed by 35 U.S.C. 122 and 37 CFR 1.14. This collection is estimated to take 23 minutes to complete, including gathering, preparing, and submitting the completed application data sheet form to the USPTO. Time will vary depending upon the individual case. Any comments on the amount of time you require to complete this form and/or suggestions for reducing this burden, should be sent to the Chief Information Officer, U.S. Patent and Trademark Office, U.S. Department of Commerce, P.O. Box 1450, Alexandria, VA 22313-1450. DO NOT SEND FEES OR COMPLETED FORMS TO THIS ADDRESS. **SEND TO: Commissioner for Patents, P.O. Box 1450, Alexandria, VA 22313-1450.**

Privacy Act Statement

The Privacy Act of 1974 (P.L. 93-579) requires that you be given certain information in connection with your submission of the attached form related to a patent application or patent. Accordingly, pursuant to the requirements of the Act, please be advised that: (1) the general authority for the collection of this information is 35 U.S.C. 2(b)(2); (2) furnishing of the information solicited is voluntary; and (3) the principal purpose for which the information is used by the U.S. Patent and Trademark Office is to process and/or examine your submission related to a patent application or patent. If you do not furnish the requested information, the U.S. Patent and Trademark Office may not be able to process and/or examine your submission, which may result in termination of proceedings or abandonment of the application or expiration of the patent.

The information provided by you in this form will be subject to the following routine uses:

1 The information on this form will be treated confidentially to the extent allowed under the Freedom of Information Act (5 U.S.C. 552) and the Privacy Act (5 U.S.C. 552a). Records from this system of records may be disclosed to the Department of Justice to determine whether the Freedom of Information Act requires disclosure of these records.

2. A record from this system of records may be disclosed, as a routine use, in the course of presenting evidence to a court, magistrate, or administrative tribunal, including disclosures to opposing counsel in the course of settlement negotiations.

3 A record in this system of records may be disclosed, as a routine use, to a Member of Congress submitting a request involving an individual, to whom the record pertains, when the individual has requested assistance from the Member with respect to the subject matter of the record.

4. A record in this system of records may be disclosed, as a routine use, to a contractor of the Agency having need for the information in order to perform a contract. Recipients of information shall be required to comply with the requirements of the Privacy Act of 1974, as amended, pursuant to 5 U.S.C. 552a(m).

5. A record related to an International Application filed under the Patent Cooperation Treaty in this system of records may be disclosed, as a routine use, to the International Bureau of the World Intellectual Property Organization, pursuant to the Patent CooperationTreaty.

6. A record in this system of records may be disclosed, as a routine use, to another federal agency for purposes of National Security review (35 U.S.C. 181) and for review pursuant to the Atomic Energy Act (42 U.S.C. 218(c)).

7. A record from this system of records may be disclosed, as a routine use, to the Administrator, General Services, or his/her designee, during an inspection of records conducted by GSA as part of that agency's responsibility to recommend improvements in records management practices and programs, under authority of 44 U.S.C. 2904 and 2906. Such disclosure shall be made in accordance with the GSA regulations governing inspection of records for this purpose, and any other relevant (i.e., GSA or Commerce) directive. Such disclosure shall not be used to make determinations about individuals.

8. A record from this system of records may be disclosed, as a routine use, to the public after either publication of the application pursuant to 35 U.S.C. 122(b) or issuance of a patent pursuant to 35 U.S.C. 151. Further, a record may be disclosed, subject to the limitations of 37 CFR 1.14, as a routine use, to the public if the record was filed in an application which became abandoned or in which the proceedings were terminated and which application is referenced by either a published application, an application open to public inspections or an issued patent.

9. A record from this system of records may be disclosed, as a routine use, to a Federal, State, or local law enforcement agency, if the USPTO becomes aware of a violation or potential violation of law or regulation.

FIBER OPTIC ENCLOSURE WITH INTERNAL CABLE SPOOL

Cross-Reference to Related Applications

This application is a continuation of application Serial No. 15/470,311, filed March 27, 2017, which is a continuation of application Serial No. 14/979,870, filed December 28, 2015, now U.S. Patent No. 9,606,319, which is a continuation of application Serial No. 14/539,459, filed November 12, 2014, now U.S. Patent No. 9,261,666, which is a continuation of application Serial No. 14/132,691, filed December 18, 2013, now U.S. Patent No. 8,891,931, which is a continuation of application Serial No. 13/924,191, filed June 21, 2013, now U.S. Patent No. 8,705,929, which is a continuation of application Serial No. 13/479,015, filed May 23, 2012, now U.S. Patent No. 8,494,333, which is a continuation of application Serial No. 13/032,337, filed February 22, 2011, now U.S. Patent No. 8,189,984, which is a continuation of application Serial No. 12/793,556, filed June 3, 2010, now U.S. Patent No. 7,894,701, which is a continuation of application Serial No. 12/182,705, filed July 30, 2008, now U.S. Patent No. 7,756,379, which application claims the benefit of provisional application Serial Nos. 61/029,248, filed February 15, 2008 and 60/954,214, filed August 6, 2007, which applications are incorporated herein by reference in their entirety.

Technical Field

The present disclosure relates to fiber optic enclosure, and more particularly, to a fiber optic enclosure with cable payout.

Background

As demand for telecommunications increases, fiber optic networks are being extended in more and more areas. In facilities such as multiple dwelling units, apartments, condominiums, businesses, etc., fiber optic enclosures are used to provide a subscriber access point to the fiber optic network. These fiber optic enclosures are connected to the fiber optic network through subscriber cables connected to a network

hub. However, the length of subscriber cable needed between the fiber optic enclosure and the network hub varies depending upon the location of the fiber optic enclosure with respect to the network hub. As a result, there is a need for a fiber optic enclosure that can effectively manage varying lengths of subscriber cable.

Summary

An aspect of the present disclosure relates to a fiber optic enclosure assembly for enclosing optical fiber connections. The fiber optic enclosure assembly includes a housing having an interior region and a bearing mount disposed in the interior region of the housing. A cable spool is connectedly engaged with the bearing mount such that the cable spool selectively rotates within the housing. A termination module is disposed on the cable spool so that the termination module rotates in unison with the cable spool.

Another aspect of the present disclosure relates to a method of paying out a fiber optic cable from a fiber optic enclosure. The method includes rotating a cable spool, which has a subscriber cable coiled around a spooling portion of the cable spool, about an axis of a housing of the fiber optic enclosure until a desired length of subscriber cable is paid out. The cable spool is disposed in an interior region of the fiber optic enclosure and a termination module is disposed on the cable spool.

A variety of additional aspects will be set forth in the description that follows. These aspects can relate to individual features and to combinations of features. It is to be understood that both the foregoing general description and the following detailed description are exemplary and explanatory only and are not restrictive of the broad concepts upon which the embodiments disclosed herein are based.

Description of the Drawings

FIG. 1 is a schematic representation of a fiber optic network that includes a fiber optic enclosure having features that are examples of inventive aspects in accordance with the principles of the present disclosure.

FIG. 2 is an isometric view of the fiber optic enclosure of FIG. 1.

FIG. 3 is an isometric view of the fiber optic enclosure of FIG. 2 with a cover in an open position.

FIG. 4 is a front view of the fiber optic enclosure of FIG. 2 with the cover in the open position.

FIG. 5 is an exploded isometric view of the fiber optic enclosure of FIG. 2.

FIG. 6 is a perspective view of a fiber optic adapter suitable for use within the fiber optic enclosure of FIG. 2.

FIG. 7 is a cross-sectional view of the fiber optic adapter taken on line 7-7 of FIG. 6.

FIG. 8 is an isometric view of another embodiment of a fiber optic enclosure.

FIG. 9 is a front view of the fiber optic enclosure of FIG. 8.

FIG. 10 is a top view of the fiber optic enclosure of FIG. 8.

FIG. 11 is a side view of the fiber optic enclosure of FIG. 8.

FIG. 12 is an isometric view of the fiber optic enclosure of FIG. 8, showing cables entering and exiting the enclosure.

FIG. 13 is an isometric view of the fiber optic enclosure of FIG. 12 without the cover.

FIG. 14 is a front view of the fiber optic enclosure of FIG. 13.

FIG. 15 is an exploded isometric view of the fiber optic enclosure of FIG. 13.

FIG. 16 is an isometric view of the cable spool of the fiber optic enclosure of FIG. 13.

FIG. 17 is a further isometric view of the fiber optic enclosure of FIG. 12, with the cover in the pivoted open position.

FIG. 18 is an exploded view of a shipping container in which is disposed the fiber optic enclosure of FIG. 8.

Detailed Description

Reference will now be made in detail to the exemplary aspects of the present disclosure that are illustrated in the accompanying drawings. Wherever possible, the same reference numbers will be used throughout the drawings to refer to the same or like structure.

Referring now to FIG. 1, a schematic representation of a fiber optic network, generally designated 11, in a facility 13 (e.g. individual residence, apartment, condominium, business, etc.) is shown. The fiber optic network 11 includes a feeder cable 15 from a central office (not shown). The feeder cable 15 enters a feeder cable input location 17 (e.g., a fiber distribution hub, a network interface device, etc.) having one or more optical splitters (e.g., 1-to-8 splitters, 1-to-16 splitters, or 1-to-32 splitters) that generate a number of individual fibers. In the subject embodiment, and by way of example only, the fiber distribution hub 17 is located on a lower level 19 of the facility 13. Each unit in the facility 13 includes a fiber optic enclosure, generally designated 21, with a subscriber cable 22 extending from each of the fiber optic enclosures 21 to the fiber distribution hub 17. The subscriber cable 22 extending between the fiber distribution hub 17 and the fiber optic enclosure 21 typically includes multiple optical fibers.

Referring now to FIGS. 2-5, the fiber optic enclosure 21 will now be described. The fiber optic enclosure 21 includes a housing, generally designated 23, having a cover 25.

The housing 23 includes a base 27, a first sidewall 29, and an oppositely disposed second sidewall 31. The first and second sidewalls 29, 31 extend outwardly from the base 27 such that the base 27 and the first and second sidewalls 29, 31 cooperatively define an interior region 33. In the subject embodiment, the cover 25 is hingedly engaged with a sidewall 35 that is connected to the base 27 and the first and second sidewalls 29, 31. It will be understood, however, that the scope of the present disclosure is not limited to the cover 25 being hingedly engaged the sidewall 35.

A cable spool, generally designated 37, is disposed in the interior region 33 of the fiber optic enclosure 21. The cable spool 37 includes a spooling portion 39,

around which subscriber cable 22 is coiled (shown schematically in FIG. 1). The cable spool 37 further includes an axial end 41.

In the subject embodiment, the axial end 41 of the cable spool 37 defines a termination area 43 (shown as a dashed line in FIG. 5). Disposed in the termination area 43 is a termination module, generally designated 45. The termination module 45 of the fiber optic enclosure 21 serves as the dividing line between the incoming fibers and the outgoing fibers.

In the subject embodiment, the termination module 45 includes an adapter plate 47. The adapter plate 47 is an L-shaped bracket having a first side 49 (shown in FIG. 4) and a second side 51. The first side 49 defines a plurality of mounting holes 53 while the second side 51 defines an adapter slot 55. It will be understood, however, that the scope of the present disclosure is not limited to the adapter plate 47 being an L-shaped bracket. The first side 49 of the adapter plate 47 is rigidly mounted (i.e., non-rotatable) to the axial end 41 of the cable spool 37 through a plurality of fasteners 57 (e.g., bolts, screws, rivets, etc.) which are inserted through the mounting holes 53 in the first side 49 and in connected engagement with the axial end 41 of the cable spool 37.

The adapter slot 55 in the second side 51 of the adapter plate 47 is adapted to receive a plurality of adapters, generally designated 401. In the subject embodiment, the adapters 401 are SC-type adapters 401, although it will be understood that the scope of the present disclosure is not limited to the use of SC-type adapters 401. Similar SC-type adapters 401 have been described in detail in commonly owned U.S. Pat. No. 5,317,663, the disclosure of which is incorporated herein by reference.

Referring now to FIGS. 6 and 7, the SC-type adapter 401 includes a main body 403 with a pair of tabs 405, 407 located on the exterior of the main body 403. The tabs 405, 407 serve to support the adapter 401 in the adapter slot 55. The adapter 401 further includes a pair of retaining clips 409, 411, with one retaining clip 409, 411 associated with each tab 405, 407. A front side 413 of the adapter 401 is inserted into the adapter slot 55. As the adapter 401 is inserted through the adapter slot 55, the retaining clips 409, 411 compress against the main body 403. The adapter 401 is inserted into the adapter slot 55 until the tabs 405, 407 abut the adapter plate 47.

With the tabs 405, 407 abutting the adapter plate 47, the retaining clips 409, 411 decompress on the opposite side of the adapter plate 47, thereby retaining the adapter plate 47 between the retaining clips 409, 411 and the tabs 405, 407.

In an alternate embodiment, the termination module includes a plurality of sliding adapter modules. Similar sliding adapter modules have been described in detail in commonly owned U.S. Pat. Nos. 5,497,444; 5,717,810, 6,591,051 and U.S. Pat. Pub. No. 2007/0025675, the disclosures of which are incorporated herein by reference.

Referring now to FIGS 3-5, the axial end 41 of the cable spool 37 further defines a slack storage area 59. The slack storage area 59 includes a cable management spool 61 disposed on the axial end 41 of the cable spool 37. The cable management spool 61 is sized such that an outer radius of the cable management spool 61 is larger than the minimum bend radius of the optical fibers so as to avoid attenuation damage to the optical fibers during storage.

The cable management spool 61 and the axial end 41 of the cable spool 37 cooperatively define a cable passage 63 that extends axially through the cable management spool 61 and through the axial end 41 of the cable spool 37. The cable passage 63 allows connectorized ends of incoming optical fibers to pass from the spooling portion 39 of the cable spool 37 to the slack storage area 59. The connectorized ends of the incoming optical fibers are then routed from the slack storage area 59 to the front sides 413 of the adapters 401 in the termination area 43.

Referring now to FIG. 5, the fiber optic enclosure 21 further includes a bearing mount, generally designated 71. In the subject embodiment, the bearing mount 71 is disposed on the base 27 of the housing 23. An outer surface 73 of the bearing mount 71 is adapted for a bearing 75 (shown as cross-hatching). In the subject embodiment, the bearing 75 is a needle bearing. However, it will be understood that the scope of the present disclosure is not limited to the bearing 75 being a needle bearing as the bearing 75 could also include a bushing, low-friction coating, etc.

In one embodiment, the bearing 75 is engaged with an inner diameter of a central hole of the cable spool 37. In another embodiment, a rotary plain bearing is formed between the outer surface 73 of the bearing mount 71 and the inner diameter of the central hole of the cable spool 37. In this embodiment, the outer diameter of the

bearing mount 71 is sized to fit within an inner diameter of a central hole of the spooling portion 39. The engagement of the bearing mount 71 and the spooling portion 39 of the cable spool 37 allows the cable spool 37 to rotate about the central axis 77 of the bearing mount 71.

Referring now to FIGS. 1 and 5, the subscriber cable 22, which includes multiple optical fibers, is coiled around the spooling portion 39 of the cable spool 37. In order to protect the subscriber cable 22 from attenuation resulting from the coiling of the subscriber cable 22 around the spooling portion 39, the cable spool 37 has an outer circumferential surface having a radius that is greater than the minimum bend radius of the subscriber cable 22. The subscriber cable 22 includes a first end having connectorized ends, which are inserted through the cable passage 63 and connectedly engaged with the first ends 413 of the adapters 401. A second end of the subscriber cable 22 is configured for connectivity with the fiber distribution hub 17. However, as shown in FIG. 1, the length of subscriber cable 22 needed between each of the fiber optic enclosures 21 in the facility 13 and the fiber distribution hub 17 will vary depending upon the location of each fiber optic enclosure 21 with respect to the fiber distribution hub 17.

A method of installing and using the fiber optic enclosure 21 to account for the varying lengths of subscriber cable 22 needed between the fiber optic enclosure 21 and the fiber distribution hub 17 will now be described. The fiber optic enclosure 21 provides dual functionality by serving as a storage location for the subscriber cable 22 and by selectively paying out a desired length of the subscriber cable 22.

A first length of subscriber cable 22 is stored in the fiber optic enclosure 21 by coiling the length of subscriber cable 22 around the cable spool 37. The first length of subscriber cable 22 includes an installation length, which is sufficiently long to extend from the mounting location of the enclosure 28 to the fiber distribution hub 17, and an excess length, which is the length of subscriber cable 22 remaining on the cable spool 37 after the installation length has been paid out. In one embodiment, the first length is greater than or equal to about 100 feet. In another embodiment, the first length of subscriber cable 22 is greater than or equal to about 200 feet. In another embodiment, the first length of subscriber cable 22 is greater than or equal to about

300 feet. In another embodiment, the first length of subscriber cable 22 is greater than or equal to about 400 feet. In another embodiment, the first length of subscriber cable 22 is greater than or equal to about 500 feet. In another embodiment, the first length of subscriber cable 22 is in the range of about 100 to about 2,000 feet. In another embodiment, the first length of subscriber cable 22 is in the range of about 100 to about 1,500 feet. In another embodiment, the first length of subscriber cable 22 is in the range of about 500 to about 1,500 feet. In a preferred embodiment, the first length of subscriber cable 22, which is coiled around the cable spool 89, is in the range of 100 to 500 feet.

In one embodiment, a second length, or the excess length, of subscriber cable 22 is stored around the cable spool 37 after the first length of subscriber cable 22 has been paid out. If the first length of subscriber cable 22 is greater than the installation length of subscriber cable 22, the second length, or excess length, is stored around the cable spool 37.

The second function of the fiber optic enclosure 21 involves the selective payout of the subscriber cable 22. With the cable spool 37 mounted to the bearing mount 71, the first end of the subscriber cable 22 in connected engagement with the front sides 413 of the adapters 401 and the outgoing optical fibers disengaged from the back sides of the adapters 401, the subscriber cable 22 can be paid out through fiber ports 79 disposed in the first and second sidewalls 29, 31. The subscriber cable 22 is paid out of the fiber optic enclosure 21 by selectively rotating the cable spool 37 with respect to the housing 23 about the central axis 77 of the bearing mount 71. As the termination module 45 is disposed on the axial end 41of the cable spool 37, the selective rotation of the cable spool 37 with respect to the housing 23 results in the selective rotation of the termination module 45. Since the termination module 45 rotates unitarily with or in unison with the cable spool 37, the second end of the subscriber cable 22 can be paid out without the first end of the subscriber cable 22 being pulled out of the termination module 45.

Once the desired length of subscriber cable 22 has been paid out, the rotation of the cable spool 37 is ceased. At this point, the position of the cable spool 37 can be fixed such that it does not rotate relative to the housing 23. In one embodiment,

a pin is inserted through an opening in the axial end 41 of the cable spool 37 and through a corresponding opening in the base 27 of the housing 23 to fix the position of the cable spool 37 with respect to the housing 23. It will be understood, however, that the scope of the present disclosure is not limited to the use of a pin to fix the position of the cable spool 37 with respect to housing 23.

An alternate method of selectively paying-out subscriber cable 22 from the fiber optic enclosure 21 will now be described. With the fiber optic enclosure 21 positioned near the fiber distribution hub 17, the second end of the subscriber cable 22 is unwound from the cable spool 37. In one embodiment, the second end is optically connected to the fiber distribution hub 17. With the second end of the subscriber cable 22 optically connected to the fiber distribution hub 17 and the first end of the subscriber cable 22 in connected engagement with the termination module 45, the fiber optic enclosure 21 is transported away from the fiber distribution hub 17. In one embodiment, the fiber optic enclosure 21 is carried away from the fiber distribution hub 17 by an installer. In another embodiment, the fiber optic enclosure 21 is transported away from the fiber distribution hub 17 in a wheeled cart (e.g., dolly, 4-wheeled cart, etc.). In a preferred embodiment, the fiber optic enclosure is disposed in a packaging enclosure (e.g., a box) during transport. As the fiber optic enclosure 21 is transported away from the fiber distribution hub 17, the subscriber cable 22 unwinds from the cable spool 37 causing the cable spool 37 to rotate within the interior region 33 of the housing 23, which is disposed in the packaging enclosure. When the fiber optic enclosure 21 has been transported to its mounting location, the fiber optic enclosure 21 is removed from the packaging enclosure, mounted to the mounting location. The cable spool 37 can be fixed in position relative to the housing 23 to prevent inadvertent rotation of the cable spool 37.

Referring now to FIGS. 8-18, an alternate embodiment of a fiber optic enclosure 121 is shown. The fiber optic enclosure 121 includes a housing 123 and a hinged cover 125.

The housing 123 includes a base wall 120, a first sidewall 127 and an oppositely disposed second sidewall 128. The first and second sidewalls 127, 128

extend outwardly from the base wall 120 such that the base wall 120 and the first and second sidewalls 127, 128 cooperatively define an interior region 130.

In the subject embodiment, the first sidewall 127 of the housing 123 defines a first port 131 while the second sidewall 128 defines a second port 132. The subscriber cable 122 enters/exits the fiber optic enclosure 121 at the first port 131 or at the second port 132. In the subject embodiment, both of the first and second ports 131, 132 are provided as knockout portions.

A cable spool 137 is positioned within the interior region 130 of enclosure 121. In the subject embodiment, the cable spool 137 is adapted for rotation within the interior region 130 of the enclosure 121. In the subject embodiment, the cable spool 137 includes a first axial end 136, an oppositely disposed second axial end 138 and a spool portion 139. The spool portion 139 is disposed between the first and second axial ends 136, 138 of the cable spool 137. The spool portion 139 is adapted to receive a subscriber cable 122 coiled around or spooled on the spool portion 139.

With the subscriber cable 122 spooled on the spool portion 139, the subscriber cable 122 can be selectively paid out by rotating the cable spool 137. As the cable spool 137 is rotated, the subscriber cable 122 is unwound from the spool portion 139 of the cable spool 137. After a desired length of subscriber cable 122 has been paid out, pin openings 141 can be used with a pin to fix the position of cable spool 137 relative to housing 123.

The subscriber cable 122 is shown with a connectorized end 144 (e.g., MTP connector) for connecting to the fiber distribution hub 17 or other equipment. An opposite end of the subscriber cable 122 passes through an opening 145 disposed in the first axial end 136 of the cable spool 137. After passing through the opening 145, the subscriber cable 122 is routed to a fanout 147 disposed on the first axial end 136 of the cable spool 137 where the cable is broken out into individual fibers 124 having connectorized ends 146 (e.g., SC connectors).

A cable management spool 161 is also disposed on the first axial end 136 of the cable spool 137. The cable management spool 161 manages fibers 124. In the subject embodiment, the cable management spool 161 includes a plurality of

fingers 162 disposed on an end of the cable management spool 161. The fingers 162 assist with cable retention.

The first axial end 136 of the cable spool 137 further includes an outer guide wall 163. In the subject embodiment, the outer guide wall 163 is disposed at a portion of the peripheral edge of the first axial end 136 adjacent to the cable management spool 161. In the subject embodiment, the outer guide wall 163 extends outwardly in a direction that is generally perpendicular to the first axial end 136.

The outer guide wall 163 includes with a cable finger 164 disposed at an end of the outer guide wall 163 that is opposite the end engaged with the first axial end 136 of the cable spool 137. The cable finger 164 assists with retention and protection of the fibers 124.

An adapter plate 149 is disposed on the first axial end 136 of the cable spool 137. In the subject embodiment, the adapter plate 149 includes separate openings 151. Each of the separate openings 151 is adapted to receive two adapters 401.

In the depicted embodiment of FIG. 16, the cable management spool 161, the outer guide wall 163 and the adapter plate 149 are integrally formed with the first axial end 136 of the cable spool 137. In the subject embodiment, the first axial end 136 of the cable spool 137 is formed from plastic. In another embodiment, the first and second axial ends 136, 138, the spool portion 139, the adapter plate 149, the cable management spool 161 and the outer guide wall 163 are integrally formed from a plastic material.

Referring now to FIGS. 13 and 14, the fiber optic enclosure 121 is shown connected to a second subscriber cable 126. After the subscriber cable 122 is paid out and cable spool 137 fixed in position relative to the housing 123, individual connectorized ends of the second subscriber cables 126 can be connected to the fibers 124 at adapters 401 of adapter plate 149. The second subscriber cables 126 exit the fiber optic enclosure 121 at a port 136 in a side 165 of the housing 123. In the illustrated embodiment, a slotted foam member 138 is disposed in the port 136. The slotted foam member 138 includes a plurality of slots through which the second subscriber cables 126 can be inserted in order to prevent or reduce the risk of ingress of environmental contamination (e.g., dust, water, etc.).

While the fiber optic enclosure 121 is shown mounted to a mounting location 183 (e.g., wall, pole, etc.) in FIGS. 1 and 17, it will be understood that the subscriber cable 122 can be paid out from the fiber optic enclosure 121 while the fiber optic enclosure 121 is either mounted to a mounting location 183 or removed from the mounting location 183. As shown in FIG. 18, the subscriber cable 122 could be paid out while the fiber optic enclosure 121 is still packaged in a shipping container 179 provided there is an opening 181 in the shipping container 179 through which the subscriber cable 122 can be pulled. After the subscriber cable 122 has been paid out, the fiber optic enclosure 121 can be removed from the shipping container 179 and mounted to the mounting location 183.

Various modifications and alterations of this disclosure will become apparent to those skilled in the art without departing from the scope and spirit of this disclosure, and it should be understood that the inventive scope of this disclosure is not to be unduly limited to the illustrative embodiments set forth herein.

WHAT IS CLAIMED IS:

1. A method of connecting a subscriber to a fiber optic network using a fiber optic enclosure, the fiber optic enclosure including a main housing, a cable spool disposed within an interior of the main housing, an adapter disposed within the interior of the main housing, and a cover that selectively provides and blocks access to the interior of the main housing, the cable spool holding at least a portion of an optical cable that includes an optical fiber extending between a first end and a second end, the first end being terminated at a first optical connector and the second end being terminated at a second optical connector, the method comprising:

paying out a portion of the optical cable from the cable spool by rotating the cable spool while the second optical connector rotates in concert with the cable spool; and

opening the cover to provide access to the interior of the main housing;

routing a connectorized end of a subscriber cable into the interior of the main housing;

plugging the connectorized end of the subscriber cable into the adapter; and

closing the cover to block access to the interior of the main housing after the subscriber cable is plugged into the adapter, wherein the adapter, the second optical connector, and the connectorized end of the subscriber cable remain disposed within the interior of the main housing when the cover is closed.

2. The method of claim 1, wherein the adapter rotates in concert with the cable spool.

3. The method of claim 1, further comprising mounting the main housing to a surface.

4. The method of claim 1, wherein paying out a portion of the optical cable includes pulling on the optical cable at the first optical connector

5. The method of claim 1, wherein the second optical connector is plugged into the adapter before paying out the portion of the optical cable.

6. The method of claim 1, further comprising optically coupling the first optical connector to the fiber optic network at a location remote from the fiber optic enclosure.

7. The method of claim 1, wherein optically coupling the first optical connector to the fiber optic network is performed before mounting the main housing to the surface.

8. The method of claim 1, wherein optically coupling the first optical connector to the fiber optic network is performed after mounting the main housing to the surface.

9. The method of claim 1, wherein opening the cover comprises pivoting the cover relative to the main housing.

10. The method of claim 1, wherein routing the connectorized end of the subscriber cable into the interior of the main housing comprises routing the connectorized end through a cable port.

11. The method of claim 10, wherein the main housing and the cover cooperate to define the cable port.

12. The method of claim 10, wherein the cable port is environmentally sealed.

13. The method of claim 12, wherein the cable port is sealed using a slitted sealing member.

14. The method of claim 12, wherein the cable port is sealed using a slitted foam member.

15. The method of claim 1, wherein the optical fiber is one of a plurality of optical fibers of the optical cable, and wherein a respective first end of each of the plurality of optical fibers is terminated at the first optical connector.

16. The method of claim 15, wherein a respective second end of each of the plurality of optical fibers is separately terminated at a respective second optical connector, each of the respective second optical connectors rotating in concert with the cable spool when the optical cable is paid out from the cable spool.

17. The method of claim 16, wherein the adapter is one of a plurality of adapters disposed within the interior of the main housing; and wherein each of the respective second optical connectors are plugged into one of the plurality of adapters.

18. The method of claim 17, wherein connectorized ends of additional subscriber cables are routed into the interior of the main housing and plugged into respective ones of the plurality of adapters when the cover is open.

19. The method of claim 1, wherein the cable spool rotates about an axis of rotation oriented to intersect the cover when the cover blocks access to the interior of the main housing.

20. A method of connecting a subscriber to a fiber optic network using a fiber optic enclosure, the fiber optical enclosure including a main housing and a cover, the main housing having opposite rear and front sides, the cover being movable relative to the main housing between an open position and a closed position, the cover blocking access to an interior of the main housing through the front side when in the closed position and allowing access to the interior through the front side when in the open position, the method comprising:

paying out an optical cable from a cable spool disposed within the interior of the main housing, the optical cable extending between a first end and a second end, the first end being routed away from the interior of the main housing while the optical cable is

being paid out, the second end rotating in unison with the cable spool within the interior of the main housing while the optical cable is being paid out;

routing an end of a subscriber cable into the interior of the main housing while the cover is in the open position;

optically coupling the end of the subscriber cable to the second end of the optical cable at an optical adapter disposed within the interior of the main housing while the cover is in the open position; and

moving the cover to the closed position to enclose the optical adapter, the end of the subscriber cable, and the second end of the cable within the interior of the main housing.

21. The method of claim 20, wherein paying out the optical cable includes pulling on the first end of the optical cable.

22. The method of claim 20, wherein the optical cable includes a plurality of optical fibers, wherein the plurality of optical fibers are connectorized at a multi-fiber connector at the first end of the optical cable; and wherein the plurality of optical fibers are individually connectorized at single-fiber connectors at the second end of the optical cable.

23. The method of claim 22, wherein the subscriber cable is one of a plurality of subscriber cables and the optical adapter is one of a plurality of optical adapters, and wherein the method further comprises:

plugging each of the single-fiber connectors into respective ones of the plurality of optical adapters within the interior of the main housing while the cover is in the open position; and

plugging connectorized ends of the subscriber cables into respective ones of the plurality of optical adapters while the cover is in the open position;

wherein moving the cover to the closed position encloses the plurality of optical adapters, the single-fiber connectors, and the connectorized ends of the plurality of subscriber cables.

24. The method of claim 20, further comprising mounting the rear side of the main housing to a wall.

Abstract

A fiber optic enclosure assembly includes a housing having an interior region and a bearing mount disposed in the interior region of the housing. A cable spool is connectedly engaged with the bearing mount such that the cable spool selectively rotates within the housing. A termination module disposed on the cable spool so that the termination module rotates in unison with the cable spool. A method of paying out a fiber optic cable from a fiber optic enclosure includes rotating a cable spool, which has a subscriber cable coiled around a spooling portion of the cable spool, about an axis of a housing of the fiber optic enclosure until a desired length of subscriber cable is paid out. A termination module is disposed on the cable spool.

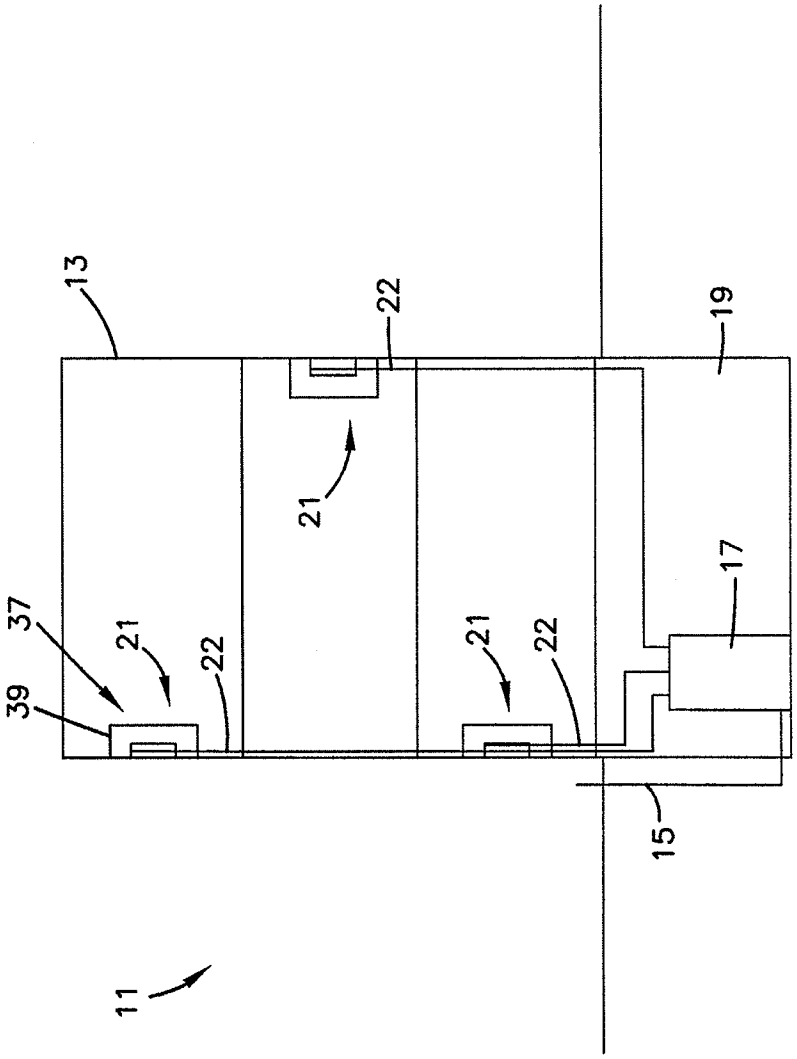

FIG. 1

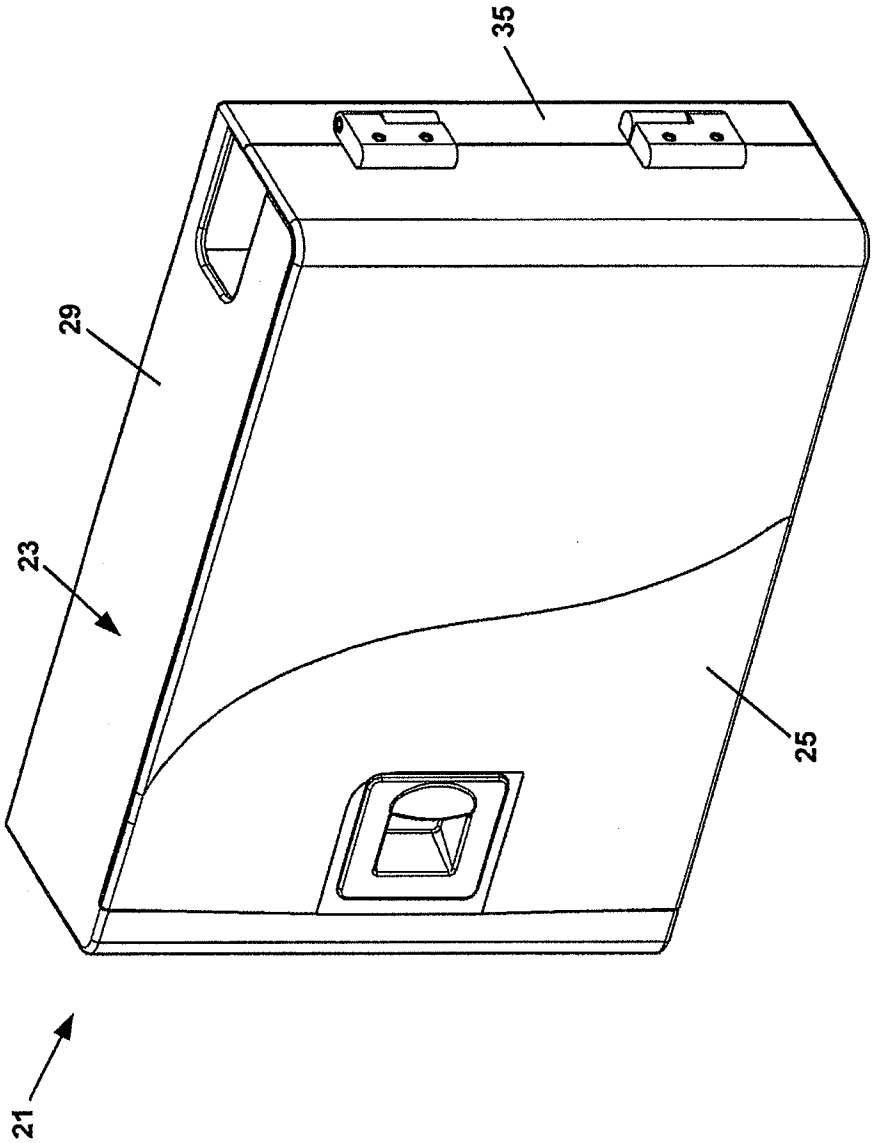

FIG. 2

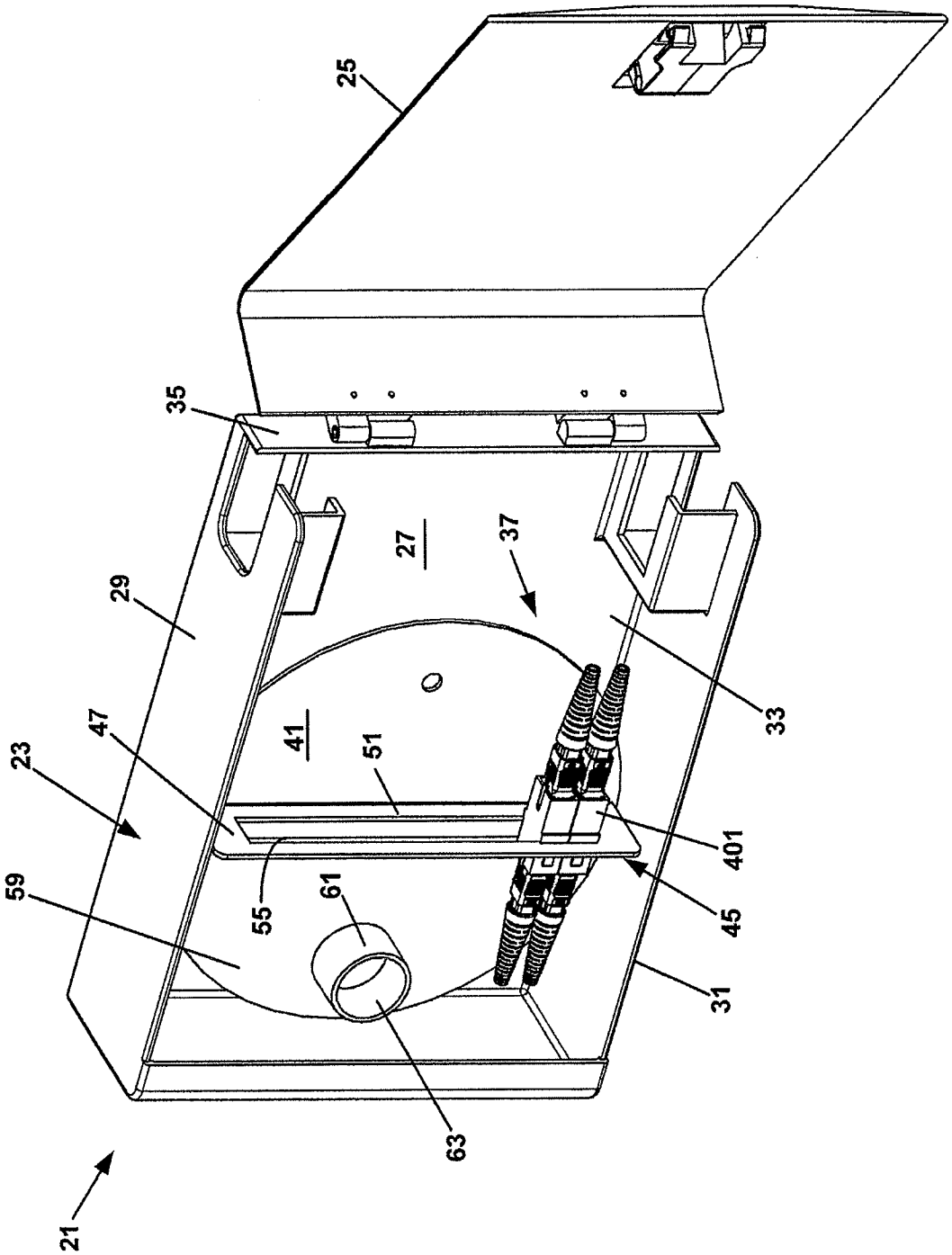

FIG. 3

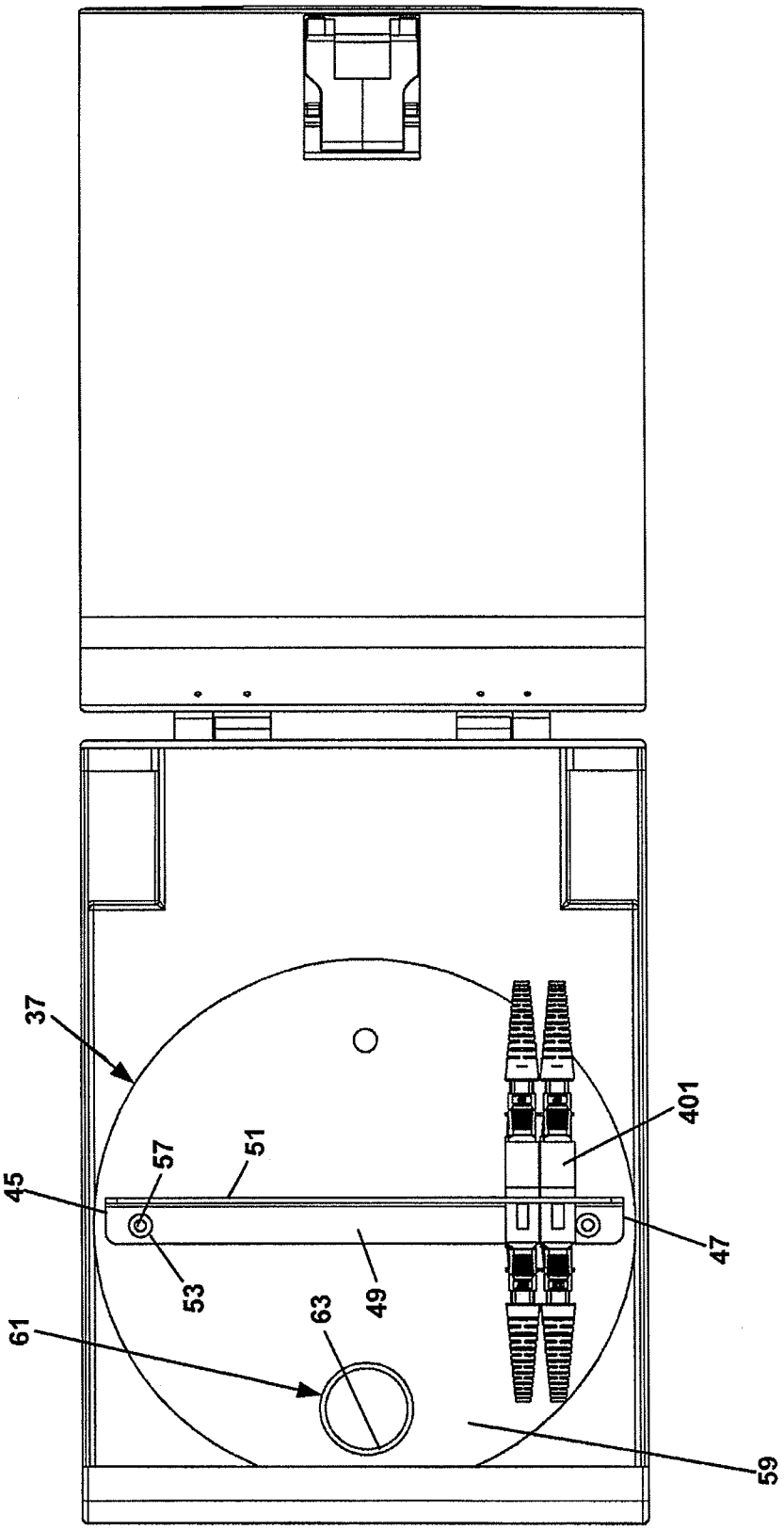

FIG. 4

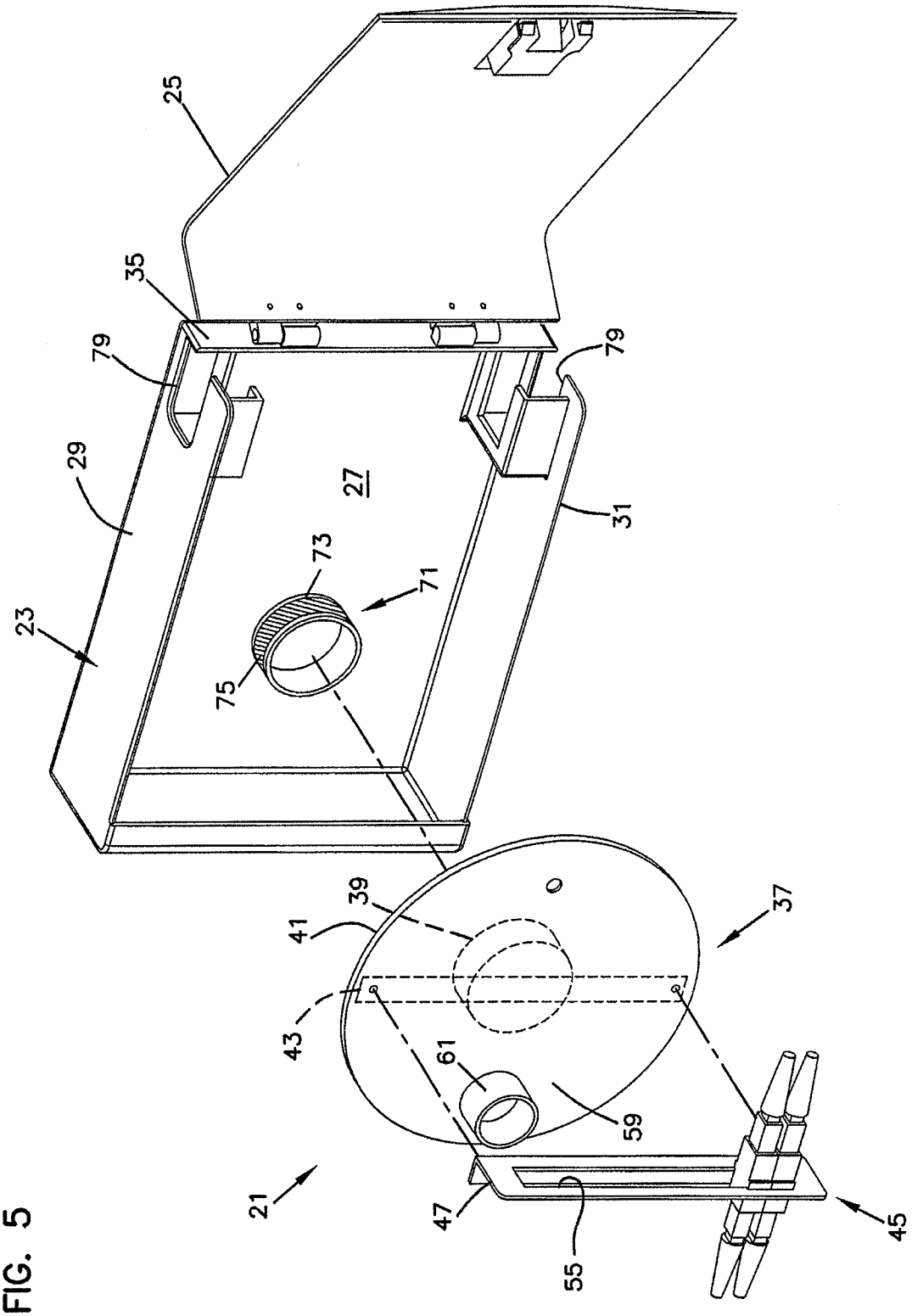

FIG. 5

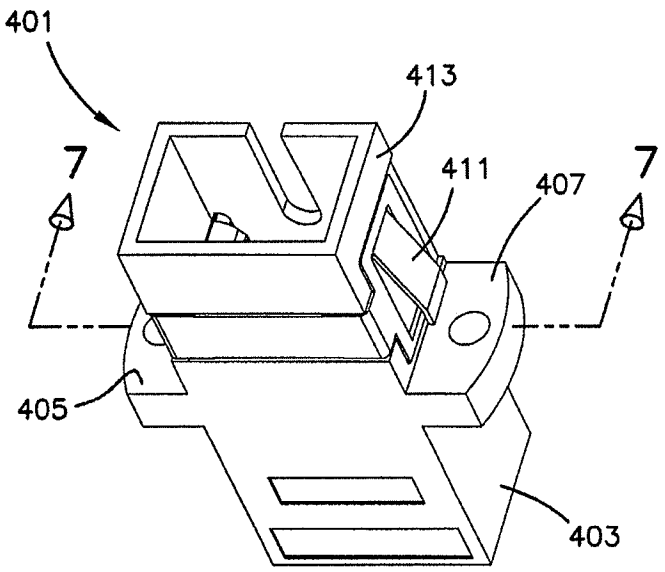

FIG. 6

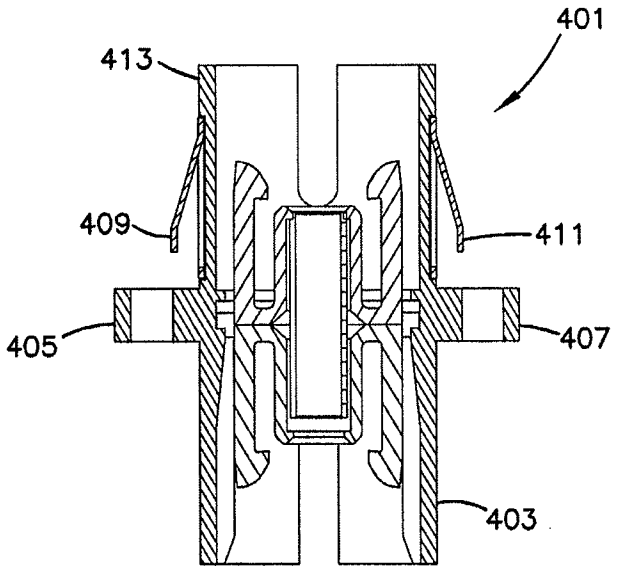

FIG. 7

FIG. 8

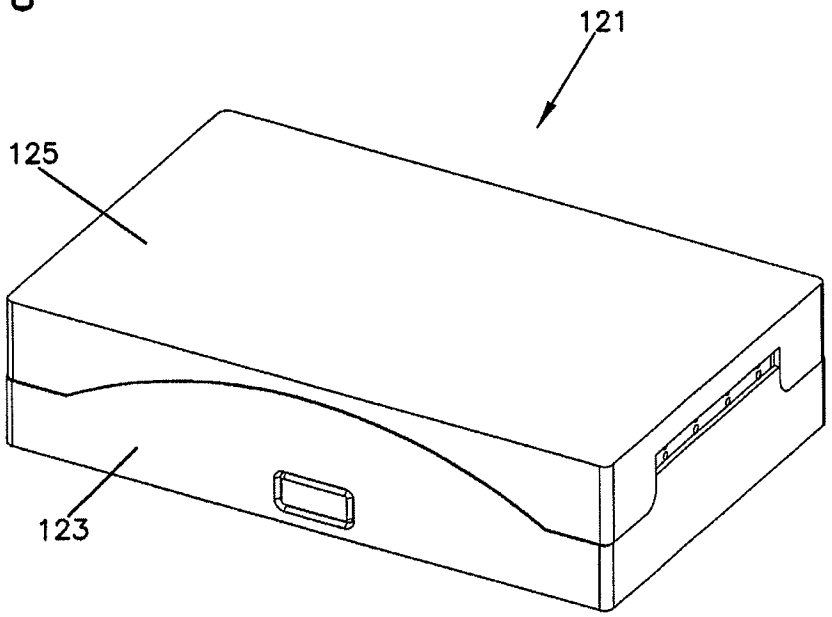

FIG. 9

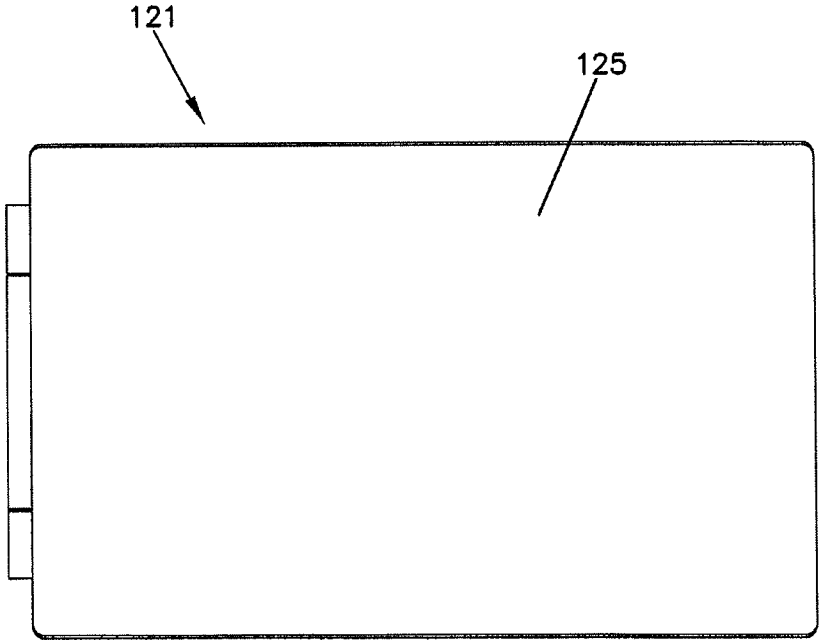

FIG. 10

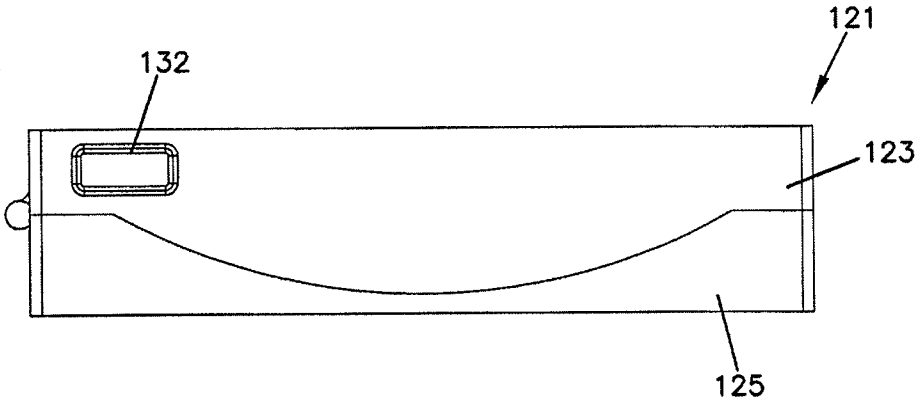

FIG. 11

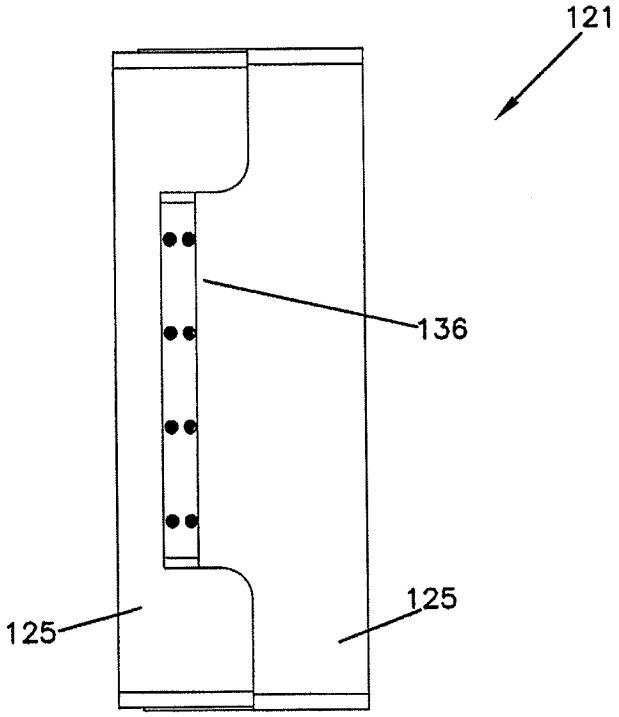

FIG. 12

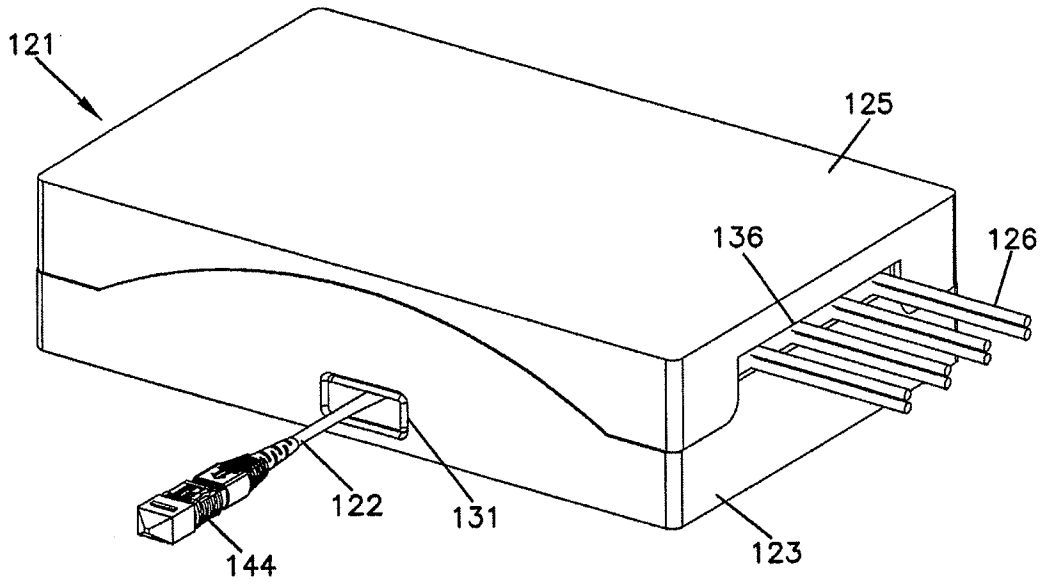

FIG. 13

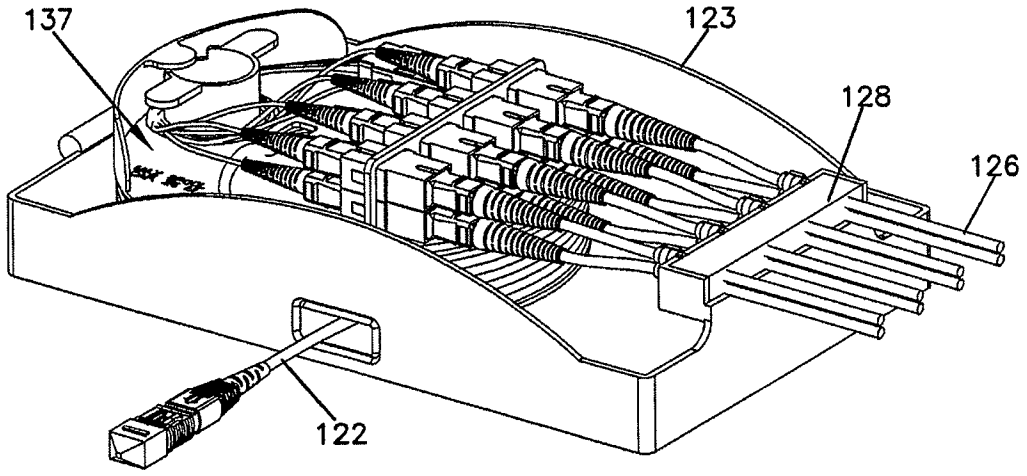

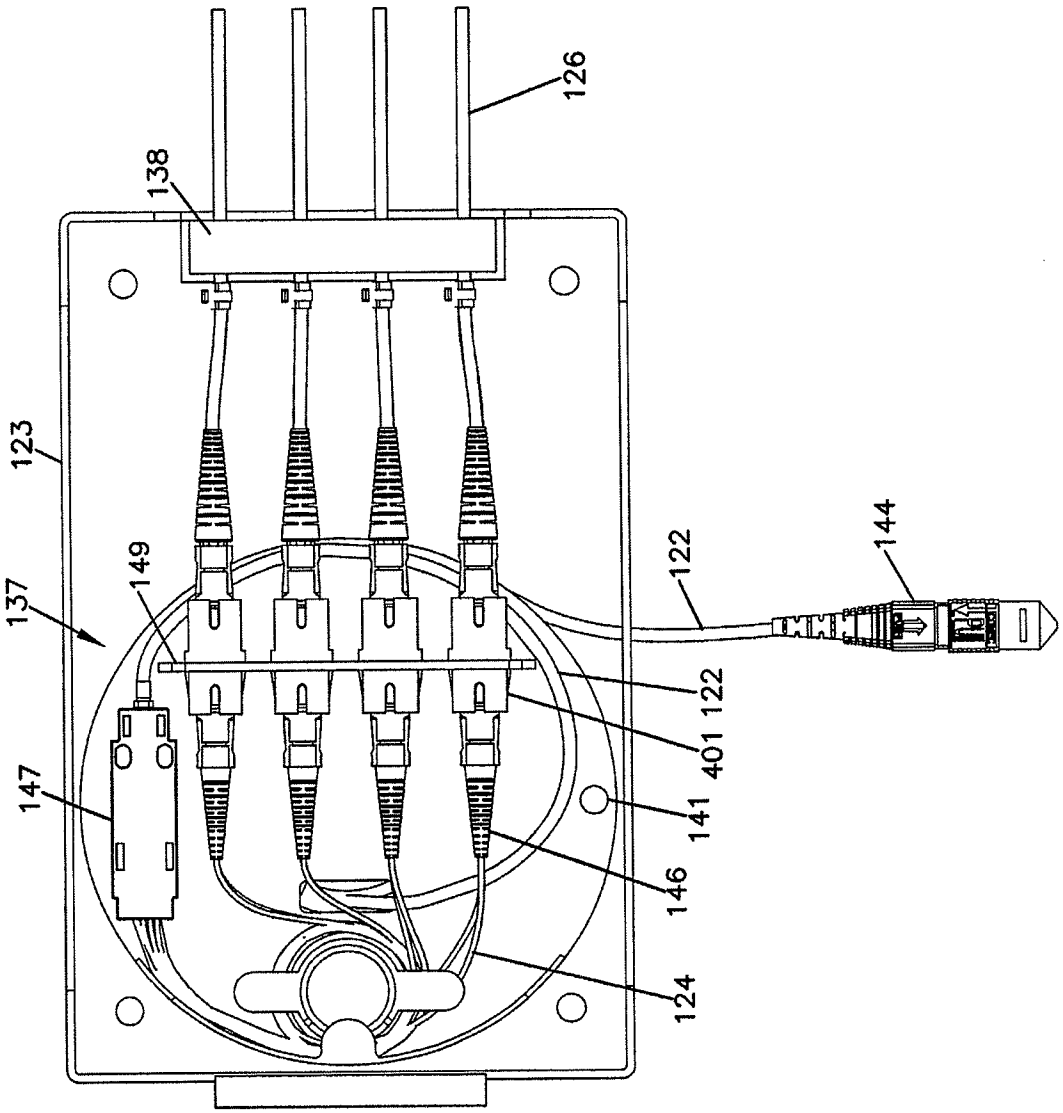

FIG. 14

FIG. 15

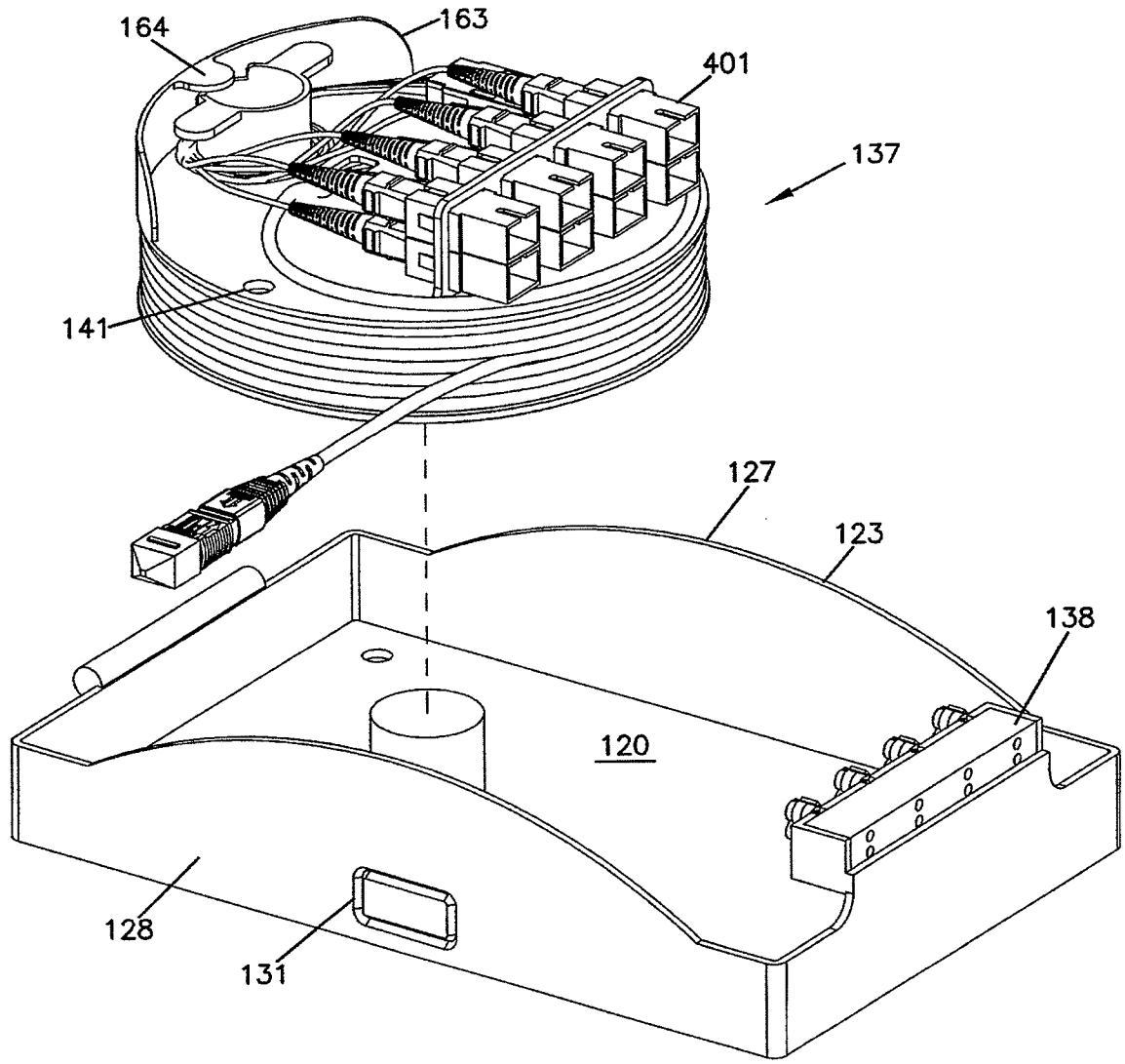

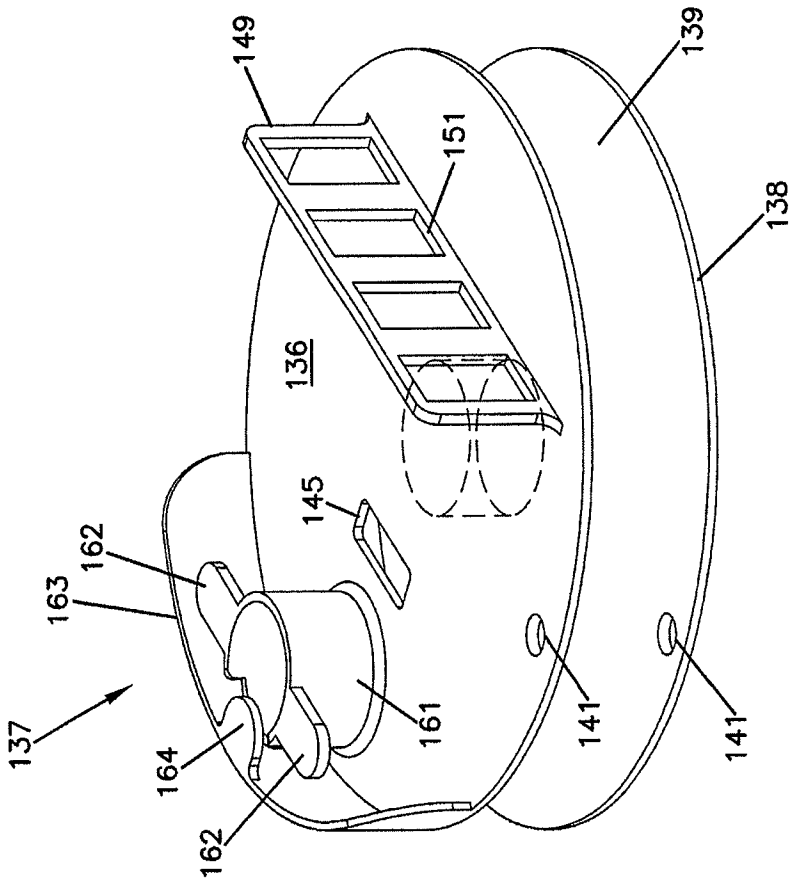

FIG. 16

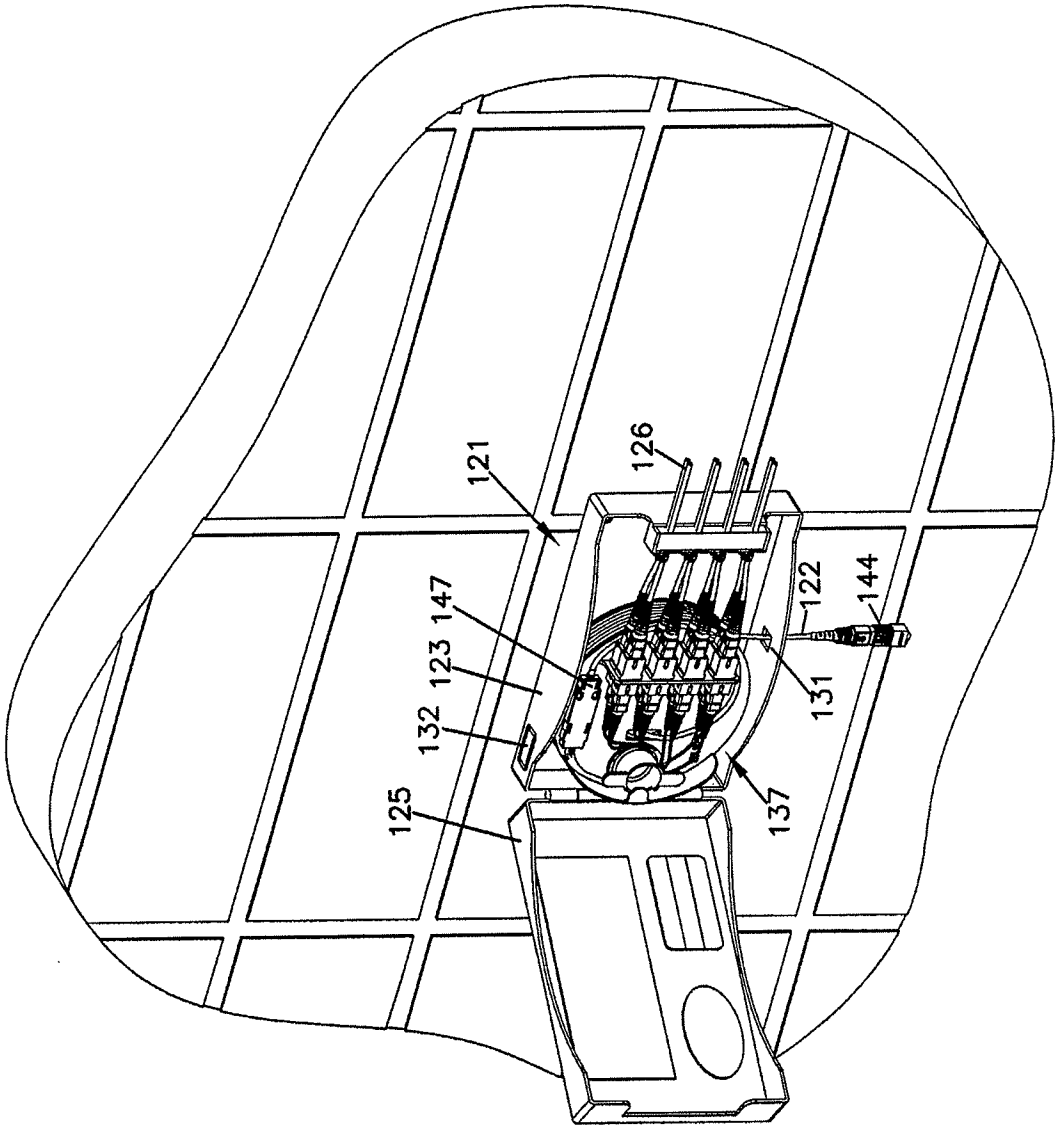

FIG. 17

FIG. 18

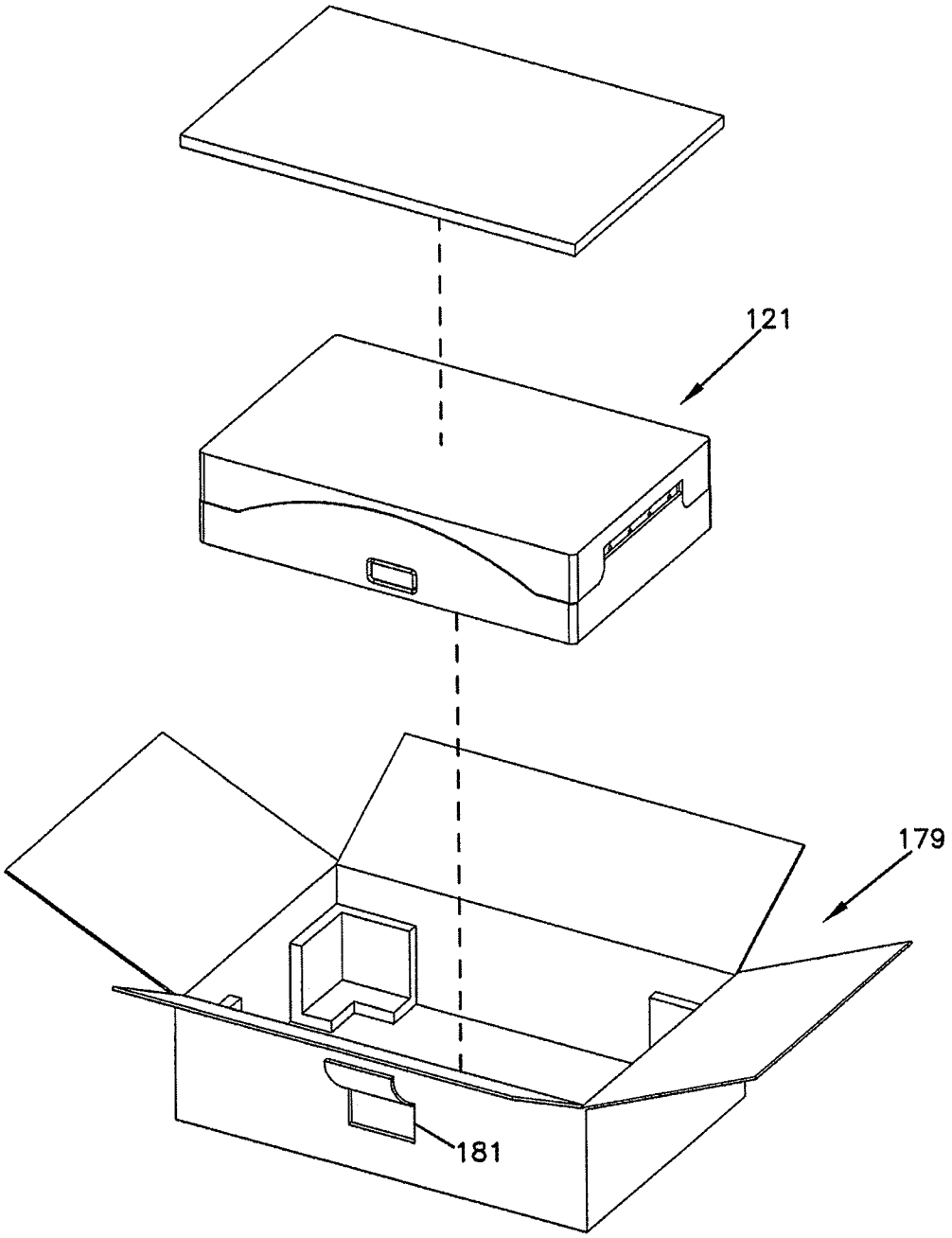

PTO/AIA/01 (06-12)
Approved for use through 01/31/2014. OMB 0651-0032
U.S. Patent and Trademark Office; U.S. DEPARTMENT OF COMMERCE
Under the Paperwork Reduction Act of 1995, no persons are required to respond to a collection of information unless it displays a valid OMB control number.

DECLARATION (37 CFR 1.63) FOR UTILITY OR DESIGN APPLICATION USING AN APPLICATION DATA SHEET (37 CFR 1.76)

Title of Invention	Fiber Optic Enclosure with Internal Cable Spool

As the below named inventor, I hereby declare that:

This declaration is directed to:

☐ The attached application, or

☒ United States application or PCT international application number 13/924,191 filed on June 21, 2013.

The above-identified application was made or authorized to be made by me.

I believe that I am the original inventor or an original joint inventor of a claimed invention in the application.

I hereby acknowledge that any willful false statement made in this declaration is punishable under 18 U.S.C. 1001 by fine or imprisonment of not more than five (5) years, or both.

WARNING:

Petitioner/applicant is cautioned to avoid submitting personal information in documents filed in a patent application that may contribute to identity theft. Personal information such as social security numbers, bank account numbers, or credit card numbers (other than a check or credit card authorization form PTO-2038 submitted for payment purposes) is never required by the USPTO to support a petition or an application. If this type of personal information is included in documents submitted to the USPTO, petitioners/applicants should consider redacting such personal information from the documents before submitting them to the USPTO. Petitioner/applicant is advised that the record of a patent application is available to the public after publication of the application (unless a non-publication request in compliance with 37 CFR 1.213(a) is made in the application) or issuance of a patent. Furthermore, the record from an abandoned application may also be available to the public if the application is referenced in a published application or an issued patent (see 37 CFR 1.14). Checks and credit card authorization forms PTO-2038 submitted for payment purposes are not retained in the application file and therefore are not publicly available.

LEGAL NAME OF INVENTOR

Inventor: Scott C. Kowalczyk Date (Optional): 1-14-2014

Signature: Scott Kowalczyk

Note: An application data sheet (PTO/SB/14 or equivalent), including naming the entire inventive entity, must accompany this form or must have been previously filed. Use an additional PTO/AIA/01 form for each additional inventor.

This collection of information is required by 35 U.S.C. 115 and 37 CFR 1.63. The information is required to obtain or retain a benefit by the public which is to file (and by the USPTO to process) an application. Confidentiality is governed by 35 U.S.C. 122 and 37 CFR 1.11 and 1.14. This collection is estimated to take 1 minute to complete, including gathering, preparing, and submitting the completed application form to the USPTO. Time will vary depending upon the individual case. Any comments on the amount of time you require to complete this form and/or suggestions for reducing this burden, should be sent to the Chief Information Officer, U.S. Patent and Trademark Office, U.S. Department of Commerce, P.O. Box 1450, Alexandria, VA 22313-1450. DO NOT SEND FEES OR COMPLETED FORMS TO THIS ADDRESS. **SEND TO: Commissioner for Patents, P.O. Box 1450, Alexandria, VA 22313-1450.**

If you need assistance in completing the form, call 1-800-PTO-9199 and select option 2.

PTO/AIA/01 (06-12)
Approved for use through 01/31/2014. OMB 0651-0032
U.S. Patent and Trademark Office; U.S. DEPARTMENT OF COMMERCE
Under the Paperwork Reduction Act of 1995, no persons are required to respond to a collection of information unless it displays a valid OMB control number.

DECLARATION (37 CFR 1.63) FOR UTILITY OR DESIGN APPLICATION USING AN APPLICATION DATA SHEET (37 CFR 1.76)

Title of Invention	Fiber Optic Enclosure with Internal Cable Spool

As the below named inventor, I hereby declare that:

This declaration is directed to:

☐ The attached application, or

☒ United States application or PCT international application number 13/924,191 filed on June 21, 2013.

The above-identified application was made or authorized to be made by me.

I believe that I am the original inventor or an original joint inventor of a claimed invention in the application.

I hereby acknowledge that any willful false statement made in this declaration is punishable under 18 U.S.C. 1001 by fine or imprisonment of not more than five (5) years, or both.

WARNING:

Petitioner/applicant is cautioned to avoid submitting personal information in documents filed in a patent application that may contribute to identity theft. Personal information such as social security numbers, bank account numbers, or credit card numbers (other than a check or credit card authorization form PTO-2038 submitted for payment purposes) is never required by the USPTO to support a petition or an application. If this type of personal information is included in documents submitted to the USPTO, petitioners/applicants should consider redacting such personal information from the documents before submitting them to the USPTO. Petitioner/applicant is advised that the record of a patent application is available to the public after publication of the application (unless a non-publication request in compliance with 37 CFR 1.213(a) is made in the application) or issuance of a patent. Furthermore, the record from an abandoned application may also be available to the public if the application is referenced in a published application or an issued patent (see 37 CFR 1.14). Checks and credit card authorization forms PTO-2038 submitted for payment purposes are not retained in the application file and therefore are not publicly available.

LEGAL NAME OF INVENTOR

Inventor: Jonathan Walter Coan Date (Optional): 9-19-13

Signature: [signature]

Note: An application data sheet (PTO/SB/14 or equivalent), including naming the entire inventive entity, must accompany this form or must have been previously filed. Use an additional PTO/AIA/01 form for each additional inventor.

This collection of information is required by 35 U.S.C. 115 and 37 CFR 1.63. The information is required to obtain or retain a benefit by the public which is to file (and by the USPTO to process) an application. Confidentiality is governed by 35 U.S.C. 122 and 37 CFR 1.11 and 1.14. This collection is estimated to take 1 minute to complete, including gathering, preparing, and submitting the completed application form to the USPTO. Time will vary depending upon the individual case. Any comments on the amount of time you require to complete this form and/or suggestions for reducing this burden, should be sent to the Chief Information Officer, U.S. Patent and Trademark Office, U.S. Department of Commerce, P.O. Box 1450, Alexandria, VA 22313-1450. DO NOT SEND FEES OR COMPLETED FORMS TO THIS ADDRESS. **SEND TO: Commissioner for Patents, P.O. Box 1450, Alexandria, VA 22313-1450.**

If you need assistance in completing the form, call 1-800-PTO-9199 and select option 2.

Privacy Act Statement

The **Privacy Act of 1974 (P.L. 93-579)** requires that you be given certain information in connection with your submission of the attached form related to a patent application or patent. Accordingly, pursuant to the requirements of the Act, please be advised that: (1) the general authority for the collection of this information is 35 U.S.C. 2(b)(2); (2) furnishing of the information solicited is voluntary; and (3) the principal purpose for which the information is used by the U.S. Patent and Trademark Office is to process and/or examine your submission related to a patent application or patent. If you do not furnish the requested information, the U.S. Patent and Trademark Office may not be able to process and/or examine your submission, which may result in termination of proceedings or abandonment of the application or expiration of the patent.

The information provided by you in this form will be subject to the following routine uses:

1. The information on this form will be treated confidentially to the extent allowed under the Freedom of Information Act (5 U.S.C. 552) and the Privacy Act (5 U.S.C 552a). Records from this system of records may be disclosed to the Department of Justice to determine whether disclosure of these records is required by the Freedom of Information Act.
2. A record from this system of records may be disclosed, as a routine use, in the course of presenting evidence to a court, magistrate, or administrative tribunal, including disclosures to opposing counsel in the course of settlement negotiations.
3. A record in this system of records may be disclosed, as a routine use, to a Member of Congress submitting a request involving an individual, to whom the record pertains, when the individual has requested assistance from the Member with respect to the subject matter of the record.
4. A record in this system of records may be disclosed, as a routine use, to a contractor of the Agency having need for the information in order to perform a contract. Recipients of information shall be required to comply with the requirements of the Privacy Act of 1974, as amended, pursuant to 5 U.S.C. 552a(m).
5. A record related to an International Application filed under the Patent Cooperation Treaty in this system of records may be disclosed, as a routine use, to the International Bureau of the World Intellectual Property Organization, pursuant to the Patent Cooperation Treaty.
6. A record in this system of records may be disclosed, as a routine use, to another federal agency for purposes of National Security review (35 U.S.C. 181) and for review pursuant to the Atomic Energy Act (42 U.S.C. 218(c)).
7. A record from this system of records may be disclosed, as a routine use, to the Administrator, General Services, or his/her designee, during an inspection of records conducted by GSA as part of that agency's responsibility to recommend improvements in records management practices and programs, under authority of 44 U.S.C. 2904 and 2906. Such disclosure shall be made in accordance with the GSA regulations governing inspection of records for this purpose, and any other relevant (*i.e.*, GSA or Commerce) directive. Such disclosure shall not be used to make determinations about individuals.
8. A record from this system of records may be disclosed, as a routine use, to the public after either publication of the application pursuant to 35 U.S.C. 122(b) or issuance of a patent pursuant to 35 U.S.C. 151. Further, a record may be disclosed, subject to the limitations of 37 CFR 1.14, as a routine use, to the public if the record was filed in an application which became abandoned or in which the proceedings were terminated and which application is referenced by either a published application, an application open to public inspection or an issued patent.
9. A record from this system of records may be disclosed, as a routine use, to a Federal, State, or local law enforcement agency, if the USPTO becomes aware of a violation or potential violation of law or regulation.

PTO/AIA/01 (06-12)
Approved for use through 01/31/2014. OMB 0651-0032
U.S. Patent and Trademark Office; U.S. DEPARTMENT OF COMMERCE
Under the Paperwork Reduction Act of 1995, no persons are required to respond to a collection of information unless it displays a valid OMB control number.

DECLARATION (37 CFR 1.63) FOR UTILITY OR DESIGN APPLICATION USING AN APPLICATION DATA SHEET (37 CFR 1.76)

Title of Invention	Fiber Optic Enclosure with Internal Cable Spool

As the below named inventor, I hereby declare that:

This declaration is directed to:

☐ The attached application, or

☒ United States application or PCT international application number 13/924,191 filed on June 21, 2013.

The above-identified application was made or authorized to be made by me.

I believe that I am the original inventor or an original joint inventor of a claimed invention in the application.

I hereby acknowledge that any willful false statement made in this declaration is punishable under 18 U.S.C. 1001 by fine or imprisonment of not more than five (5) years, or both.

WARNING:

Petitioner/applicant is cautioned to avoid submitting personal information in documents filed in a patent application that may contribute to identity theft. Personal information such as social security numbers, bank account numbers, or credit card numbers (other than a check or credit card authorization form PTO-2038 submitted for payment purposes) is never required by the USPTO to support a petition or an application. If this type of personal information is included in documents submitted to the USPTO, petitioners/applicants should consider redacting such personal information from the documents before submitting them to the USPTO. Petitioner/applicant is advised that the record of a patent application is available to the public after publication of the application (unless a non-publication request in compliance with 37 CFR 1.213(a) is made in the application) or issuance of a patent. Furthermore, the record from an abandoned application may also be available to the public if the application is referenced in a published application or an issued patent (see 37 CFR 1.14). Checks and credit card authorization forms PTO-2038 submitted for payment purposes are not retained in the application file and therefore are not publicly available.

LEGAL NAME OF INVENTOR

Inventor: Jonathan R. Kaml Date (Optional): 01-14-14

Signature: [signature]

Note: An application data sheet (PTO/SB/14 or equivalent), including naming the entire inventive entity, must accompany this form or must have been previously filed. Use an additional PTO/AIA/01 form for each additional inventor.

This collection of information is required by 35 U.S.C. 115 and 37 CFR 1.63. The information is required to obtain or retain a benefit by the public which is to file (and by the USPTO to process) an application. Confidentiality is governed by 35 U.S.C. 122 and 37 CFR 1.11 and 1.14. This collection is estimated to take 1 minute to complete, including gathering, preparing, and submitting the completed application form to the USPTO. Time will vary depending upon the individual case. Any comments on the amount of time you require to complete this form and/or suggestions for reducing this burden, should be sent to the Chief Information Officer, U.S. Patent and Trademark Office, U.S. Department of Commerce, P.O. Box 1450, Alexandria, VA 22313-1450. DO NOT SEND FEES OR COMPLETED FORMS TO THIS ADDRESS. **SEND TO: Commissioner for Patents, P.O. Box 1450, Alexandria, VA 22313-1450.**

If you need assistance in completing the form, call 1-800-PTO-9199 and select option 2.