IN THE UNITED STATES DISTRICT COURT
FOR THE DISTRICT OF DELAWARE

BABY JOGGER, LLC,	)	
	)	
Plaintiff,	)	
	)	
v.	)	C.A. No. 24-723-GBW
	)	
EVENFLO COMPANY, INC.,	)	**JURY TRIAL DEMANDED**
	)	
Defendant.	)	

SECOND AMENDED COMPLAINT

Plaintiff Baby Jogger, LLC ("Baby Jogger") files this Second Amended Complaint for patent infringement against Defendant EvenFlo Company, Inc. ("EvenFlo"), and in support thereof alleges the following:

OVERVIEW

1. Baby Jogger has been a leading designer and innovator of baby strollers since at least 1984, when it invented the first jogging stroller. Baby Jogger's commitment to providing innovative baby stroller solutions continued when it invented and introduced the first true convertible single-to-double stroller. Despite this innovation being protected by several Baby Jogger patents, aggressive competitors such as EvenFlo copied Baby Jogger's invention and saturated the market with infringing products, stealing valuable market share that rightfully belongs to Baby Jogger.

NATURE OF THE ACTION

2. This is an action for infringement of United States Patent No. 11,192,568 ("the '568 Patent"), United States Patent No. 11,505,231 ("the '231 Patent"), United States Patent No. 11,577,771 ("the '771 Patent"), United States Patent No. 11,731,682 ("the '682 Patent"), and

United States Patent No. 11,878,729 ("the '729 Patent") (collectively, "the Asserted Patents"), which arises under the Patent Laws of the United States, Title 35, United States Code, §§ 100 *et seq*., including 35 U.S.C. §§ 271 and 281.

3. As set forth in detail below, this action for patent infringement arises as a result of EvenFlo's unauthorized and unlicensed practice of claims of the Asserted Patents through at least the making, using, offering for sale, and/or selling within the United States, as well as importing into the United States, at least its EvenFlo Pivot Xpand Travel System, as well as its Pivot Xpand Second Toddler Seats[1] (collectively the "Infringing Products").

PARTIES

4. Baby Jogger is a limited liability company organized and existing under the laws of the Commonwealth of Virginia, with a principal place of business at 6655 Peachtree Dunwoody Road, Atlanta, Georgia 30328.

5. On information and belief, EvenFlo is a corporation organized and existing under the laws of the State of Delaware, with a principal place of business at 3131 Newmark Drive, Miamisburg, Ohio 45342.

6. On information and belief, EvenFlo is a wholly owned subsidiary of Goodbaby International Holdings Limited.

JURISDICTION AND VENUE

7. This Court has exclusive subject matter jurisdiction over this action under 28 U.S.C. §§ 1331 and 1338(a) because the Complaint concerns a federal question arising under the Patent Laws of the United States, including, without limitation, 35 U.S.C. §§ 271 and 281.

[1] https://www.evenflo.com/products/pivot-xpand-stroller-second-toddler-seat; https://www.evenflo.com/products/gold-pivot-xpand-baby-stroller-seat

8. This Court has personal jurisdiction over EvenFlo because it is a corporation organized and existing under the laws of the State of Delaware and this judicial district.

9. This Court has personal jurisdiction over EvenFlo because it conducts business in Delaware and has committed acts of patent infringement in Delaware through the manufacture, use, offering for sale, and/or sale of Infringing Products in Delaware.

10. Venue is proper in this judicial district under 28 U.SC. §§ 1391(b)-(c) and 1400(b) because EvenFlo resides in this judicial district.

BACKGROUND

The Patents-In-Suit

A. U.S. Patent No. 11,192,568

11. The ’568 Patent, titled “Removable Seat Attachment For A Stroller,” was issued by the USPTO on December 7, 2021. A true and correct copy of the ’568 Patent is attached to this Complaint as **Exhibit A**.

12. The application that resulted in the issuance of the ’568 Patent, U.S. Patent Application No. 16/832,429, was filed on March 27, 2020, and claims priority to U.S. Provisional Patent Application No. 61/119,920 (“the ’920 Provisional Application”), filed on December 4, 2008 and U.S. Provisional Patent Application No. 62/311,224 (“the ’224 Provisional Application”), filed on March 21, 2016.

13. The ’568 Patent is assigned to Baby Jogger.

14. Baby Jogger, as assignee, owns the entire right, title, and interest in the ’568 Patent.

15. The ’568 Patent is generally directed to a stroller having seat attachment adapters for a second seat that is removably coupled to the stroller at a vertical position lower than and in

front of the first seat. Exemplary embodiments of the claimed invention are illustrated in at least figures 9A-9D of the ’568 Patent, shown below:

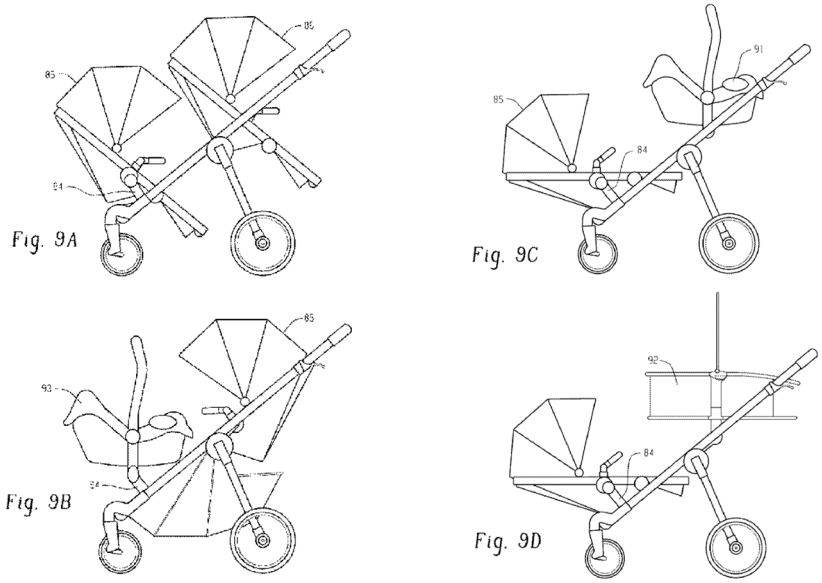

16. As an example, claim 1 of the ’568 Patent recites the following:

A stroller, comprising:

a stroller frame comprising:

a first upper tube support frame;

a second upper tube support frame;

a first front wheel support frame rotatably adjusted to be substantially parallel with respect to the first upper tube support frame when the stroller frame is unfolded from a folded configuration;

a second front wheel support frame rotatably adjusted to be substantially parallel with respect to the second upper tube support frame when the stroller frame is unfolded from a folded configuration;

a first back wheel support frame rotated with respect to the first upper tube support frame; and

a second back wheel support frame rotated with respect to the second upper tube support frame;

a plurality of wheels comprising at least one front wheel and a plurality of back wheels;

a first seat coupled along the first upper tube support frame and the second upper tube support frame at a first vertical position of the stroller frame;

a first seat attachment adapter coupled to the first front wheel support frame at a second vertical position of the stroller frame that is below the first vertical position;

a second seat attachment adapter coupled to the second front wheel support frame at a third vertical position of the stroller frame that is below the first vertical position;

wherein a second seat is removably coupled to the first seat attachment adapter and the second seat attachment adapter to position the second seat at a fourth vertical position that is below the first vertical position and wherein the second vertical position and the third vertical position are at a same vertical height.

B. U.S. Patent No. 11,505,231

17. The ’231 Patent, titled “Removable Seat Attachment For A Stroller,” was issued by the USPTO on November 22, 2022. A true and correct copy of the ’231 Patent is attached to this Complaint as **Exhibit B**.

18. The application that resulted in the issuance of the ’231 Patent, U.S. Patent Application No. 17/877,323, was filed on July 29, 2022, and claims priority to the ’920 Provisional Application, filed on December 4, 2008 and the ’224 Provisional Application, filed on March 21, 2016.

19. The ’231 Patent is assigned to Baby Jogger.

20. Baby Jogger, as assignee, owns the entire right, title, and interest in the ’231 Patent.

21. The ’231 Patent is generally directed to a stroller system having front seat attachments to support a front stroller seat that is substantially over the front wheels and lower than the rear stroller seat.

22. As an example, claim 1 of the ’231 Patent recites the following:

A stroller system for supporting a front stroller seat and a rear stroller seat, the system comprising:

a pair of rear wheels;

a pair of front wheels;

a frame including a handle portion, a rear wheel support portion, a front wheel support portion and a folding mechanism connecting the front wheel support portion and the handle portion in both an unfolded configuration and in a folded configuration, wherein the folding mechanism connects the rear wheel support portion to the front wheel support portion and the handle portion, wherein the frame includes a stroller seat support portion positioned at a first vertical position adjacent the handle portion, and wherein the front wheel support portion and the handle portion are substantially parallel when the frame is in the unfolded configuration; and

a front seat attachment configured for attachment to the front wheel support portion at a second vertical position substantially lower than the first vertical position,

wherein the front seat attachment is configured to releasably connect to and support the front stroller seat in either a forward-facing configuration or a backward-facing configuration,

wherein the front seat attachment is configured to support the front stroller seat substantially over the front wheels so that a center of gravity of the stroller system is between the front wheels and the rear wheels;

wherein the rear wheel support portion extends diagonally from the front wheel support portion when the frame is in the unfolded configuration, and the rear wheel support portion is disposed adjacent to both the front wheel support portion and the handle portion when the frame is in the folded configuration; and

wherein the stroller seat support portion positioned at the first vertical position and the front seat attachment at the second vertical position create an inline descending configuration of the rear stroller seat and the front stroller seat.

C. U.S. Patent No. 11,577,771

23. The ’771 Patent, titled “Removable Seat Attachment For A Stroller,” was issued by the USPTO on February 14, 2023. A true and correct copy of the ’771 Patent is attached to this Complaint as **Exhibit C**.

24. The application that resulted in the issuance of the ’771 Patent, U.S. Patent Application No. 17/876,492, was filed on July 28, 2022, and claims priority to the ’920 Provisional Application, filed on December 4, 2008 and the ’224 Provisional Application, filed on March 21, 2016.

25. The ’771 Patent is assigned to Baby Jogger.

26. Baby Jogger, as assignee, owns the entire right, title, and interest in the ’771 Patent.

27. The ’771 Patent is generally directed to a stroller having a first seat that is releasably connected to the frame in a forward or backward facing position and seat attachments for connecting a second seat to the frame in a forward or backward facing position that is lower than and in front of the first seat.

28. As an example, claim 1 of the ’771 Patent recites the following:

> A stroller convertible from a single seat configuration to a double seat configuration without increasing its footprint, comprising:
>
> two rear wheels;
>
> only two front wheels;
>
> a frame supported by the front and rear wheels and comprising a handle portion and left and right foldable support members extending from the handle portion towards a front end portion of the frame, the foldable support members extending in a parallel, spaced relationship and substantially within a plane that runs diagonally from the handle portion towards the front end portion of the frame;
>
> a first seat releasably connected to the frame at a first vertical position that is closer to the handle portion than the front end portion, the first seat being connectable to the frame in either a forward or backward facing position to form the single seat configuration; and
>
> wherein the frame receives an optional second seat assembly to form the double seat configuration, the second seat assembly comprising:
>
> right and left seat attachments disposed along the right and left support members of the frame, respectively, at a second vertical position that is lower than

the first vertical position, and wherein the second vertical position is closer to the front end portion than the handle portion; and

a second seat connectable to the right and left seat attachments in either a forward or backward facing position;

wherein the first seat and the second seat, when connected to the frame, are arranged in an inline descending configuration substantially along the plane of the frame.

D. U.S. Patent No. 11,731,682

29. The ’682 Patent, titled “Removable Seat Attachment For A Stroller,” was issued by the USPTO on August 22, 2023. A true and correct copy of the ’682 Patent is attached to this Complaint as **Exhibit D**.

30. The application that resulted in the issuance of the ’682 Patent, U.S. Patent Application No. 16/903,292, was filed on June 16, 2020, and claims priority to the ’920 Provisional Application, filed on December 4, 2008 and the ’224 Provisional Application, filed on March 21, 2016.

31. The ’682 Patent is assigned to Baby Jogger.

32. Baby Jogger, as assignee, owns the entire right, title, and interest in the ’682 Patent.

33. The ’682 Patent is generally directed to a stroller having a first seat coupled to frame closer to the handle portion and second seat attachment housings and adapters for connecting a second seat closer to the front end of the stroller .

34. As an example, claim 1 of the ’682 Patent recites the following:

A stroller, comprising:

a stroller frame comprising a handle portion and a front end portion;

a plurality of wheels comprising a plurality of back wheels;

a first seat coupled to the stroller frame at a first vertical position of the stroller frame, wherein the first seat is disposed closer to the handle portion than the front end portion of the stroller frame;

a first seat attachment housing coupled to the stroller frame at a second vertical position of the stroller frame that is below the first vertical position, wherein a first front wheel and a second front wheel extend from the front end of the stroller;

a second seat attachment housing coupled to the stroller frame at a third vertical position of the stroller frame that is below the first vertical position, wherein the third vertical position is closer to the front end portion than the handle portion;

a first seat attachment adapter spaced from and coupled to the first seat attachment housing by a first attachment frame member; and

a second seat attachment adapter spaced from and coupled to the second seat attachment housing by a second attachment frame member;

wherein the first seat and the second seat, when connected to the frame, are arranged in an inline descending configuration along the stroller frame.

E. U.S. Patent No. 11,878,729

35. The ’729 Patent, titled Removable Seat Attachment For A Stroller,” was issued by the USPTO on January 23, 2024. A true and correct copy of the ’729 Patent is attached to this Complaint as **Exhibit E**.

36. The application that resulted in the issuance of the ’729 Patent, U.S. Patent Application No. 18/051,053, was filed on October 31, 2022, and claims priority to The ’920 Provisional Application, filed on December 4, 2008 and the ’224 Provisional Application, filed on March 21, 2016.

37. The ’729 Patent is assigned to Baby Jogger.

38. Baby Jogger, as assignee, owns the entire right, title, and interest in the ’729 Patent.

39. The ’729 Patent is generally directed to a stroller system having a front seat attachment to support a front stroller seat that is substantially over the front wheels and lower than the rear stroller seat.

40. As an example, claim 1 of the ’729 Patent recites the following:

> A stroller system for supporting a front stroller seat and a rear stroller seat, the system comprising:
>
> a pair of rear wheels;
>
> a pair of front wheels;
>
> a frame including a handle portion, a rear wheel support portion, a front wheel support portion, and a folding mechanism connecting the front wheel support portion and the handle portion in both an unfolded configuration and in a folded configuration,
>
> wherein the frame includes a stroller seat support portion positioned at a first vertical position adjacent the handle portion, and wherein the front wheel support portion and the handle portion are parallel when the frame is in the unfolded configuration; and
>
> a front seat attachment configured for attachment to the front wheel support portion at a second vertical position substantially lower than the first vertical position,
>
> wherein the front seat attachment is configured to releasably connect to and support the front stroller seat in either a forward-facing configuration or a backward-facing configuration,
>
> wherein the front seat attachment is configured to support the front stroller seat substantially over the front wheels so that a center of gravity of the stroller system is between the front wheels and the rear wheels;
>
> wherein the rear wheel support portion extends diagonally relative to the front wheel support portion when the frame is in the unfolded configuration, and the rear wheel support portion is disposed adjacent to both the front wheel support portion and the handle portion when the frame is in the folded configuration; and
>
> wherein the stroller seat support portion positioned at the first vertical position and the front seat attachment at the second vertical position create an inline descending configuration of the rear stroller seat and the front stroller seat.

Baby Jogger's Ownership of the Asserted Patents

41. On December 4, 2008, inventor Mark Zehfuss filed the '920 Provisional Application titled "Attachment for a Stroller."

42. On December 4, 2009, inventor Mark Zehfuss filed U.S. Patent Application No. 12/631,375 ("the '375 Application") titled "Seat attachment for a stroller," which claimed priority to the '920 Provisional Application.

43. Also on December 4, 2009, Mark Zehfuss assigned "the full, exclusive and entire right, title, and interest" in the '375 Application to Dynamic Brands, LLC ("Dynamic Brands"). This assignment expressly included "any division, continuation, continuation-in-part, substitution, reissue, renewal, reexam, or request for continued examination ("RCE") thereof, and in and to all inventions and improvements thereon…." A true and correct copy of this assignment is attached to this Complaint as **Exhibit F**.

44. On or around April 20, 2012, Baby Jogger Acquisition, LLC (which later merged with Baby Jogger, LLC) and Dynamic Brands, LLC entered into a Membership Interest and Asset Purchase Agreement (the "Purchase Agreement"). A true and correct, redacted copy of this Purchase Agreement is attached to this Complaint as **Exhibit G**.

45. As part of the Purchase Agreement, Dynamic Brands agreed to "sell, convey, transfer, assign and deliver" to Baby Jogger "***all of [Dynamic Brands'] and its Subsidiary's right, title and interest*** in and to, free and clear of all Liens . . . (a) the Intellectual Property described in Annex 2.2(a)…." Ex. G at 11 (§ 2.2) (emphasis added). Annex 2.2(a) to the Purchase Agreement included, *inter alia*, the '920 Provisional Application and '375 Application. Ex. G at Annex 2.2(a).

46. The Purchase Agreement further defined "Intellectual Property" to include "(a) patents, patent applications, patent disclosures and inventions (whether or not patentable and

whether or not reduced to practice) and any reissue, continuation, continuation in part, revision, extension or reexamination thereof . . . ." Ex. G at 5.

47. As part of the Purchase Agreement, Dynamic Brands represented and warranted that Baby Jogger "shall own or otherwise have the rights to use all Intellectual Property in connection with the Business . . . free and clear of all Liens" and that Baby Jogger "shall possess ***all right, title and interest*** in and to all of the Registered Intellectual Property . . . free and clear of all Liens . . . ." Ex. G at 22-23 (§ 3.16(b)) (emphasis added). The Purchase Agreement defined Pending and Registered Intellectual Property to include the '920 Provisional Application and '375 Application. Ex. G at 22 (§ 3.16), Schedule 3.16(a).

48. As part of the Purchase Agreement, Dynamic Brands did not retain any right, title, or interest in the '920 Provisional Application or the '375 Application. *See, e.g.*, Ex. G at 5, 11 (§ 2.2), 22-23 (§3.16).

49. At the time the Purchase Agreement was executed, there were no existing patents or pending continuation patent applications associated with the '920 Provisional Application or the '375 Application.

50. As part of the Purchase Agreement, Dynamic Brands also represented and warranted that it would cooperate with Baby Jogger "in ensuring [Baby Jogger's] ownership of the Pending Intellectual Property and the Registered Intellectual Property are properly recorded." Ex. G at 22 (§ 3.16(a)); *see also* Ex. G at 40 (§ 6.2(a)). Schedule 3.16(a) of the Purchase Agreement includes, *inter alia*, the '920 Provisional Application and '375 Application. Ex. G at Schedule 3.16(a).

51. To that end, on April 20, 2012, Dynamic Brands executed an Assignment and Assumption Agreement with Baby Jogger. A true and correct copy of this assignment agreement

is attached to this Complaint as **Exhibit H**. Pursuant to that assignment agreement, Dynamic Brands assigned to Baby Jogger "***all of [Dynamic Brands'] right, title and interest*** in and to the Acquired Assets that are intangible personal property including . . . the patent applications and issued patents set forth on Exhibit B . . . ." Ex. H at 3 (emphasis added). Exhibit B to the Assignment and Assumption Agreement included the '920 Provisional Application and '375 Application. Ex. H at 7.

52. The April 20, 2012 Assignment and Assumption Agreement incorporated by reference the terms of the Purchase Agreement. Ex. H at 3.

53. The '224 Provisional Application was filed by Baby Jogger on March 21, 2016.

54. Each of the Asserted Patents are continuations of the '375 Application and claim priority to the '920 Provisional Application or to both the '920 Provisional Application and the '224 Provisional Application. As a result of at least the above referenced agreements, Baby Jogger owns all right, title and interest to the Asserted Patents.

EvenFlo's Infringing Products

55. EvenFlo makes, uses, sells, and/or offers to sell in the United States, and/or imports into the United States, the Infringing Products, including, but not limited to, the EvenFlo Pivot Xpand Travel System that infringes claims of the Asserted Patents.

https://www.evenflo.com/products/pivot-xpand-travel-system-litemax-infant-car-seat

56. EvenFlo makes, uses, sells, and/or offers for sale in the United States, and/or imports into the United States, the Pivot Xpand Second Toddler Seats. These products, when incorporated with the EvenFlo Pivot Xpand Travel System, infringe claims of the Asserted Patents.

https://www.evenflo.com/products/pivot-xpand-stroller-second-toddler-seat

COUNT ONE

(Direct Infringement of the ’568 Patent under 35 U.S.C. § 271(a))

57. Baby Jogger realleges and incorporates the preceding paragraphs 1-56 as set forth above.

58. EvenFlo has been and is directly infringing at least claims 1 and 7-9 of the ’568 Patent, literally and/or under the doctrine of equivalents, by making, using, offering to sell, and/or selling within the United States, and/or importing into the United States, the Infringing Products.

59. By way of example, the Infringing Products infringe at least claim 1 of the ’568 Patent because they contain each and every limitation of this claim.

60. Without conceding the preamble is a limitation, the Infringing Products each are “[a] stroller comprising: a stroller frame”:

https://www.evenflo.com/products/pivot-xpand-travel-system-litemax-infant-car-seat

61. The Infringing Products further include a stroller frame comprising “a first upper tube support frame” and “a second upper tube support frame”:

https://www.evenflo.com/products/pivot-xpand-travel-system-litemax-infant-car-seat

62. The Infringing Products also include a stroller frame comprising "a first front wheel support frame rotatably adjusted to be substantially parallel with respect to the first upper tube support frame when the stroller frame is unfolded from a folded configuration":

https://www.evenflo.com/products/pivot-xpand-travel-system-litemax-infant-car-seat

63. The Infringing Products likewise contain a stroller frame comprising "a second front wheel support frame rotatably adjusted to be substantially parallel with respect to the second upper tube support frame when the stroller frame is unfolded from a folded configuration":

https://www.evenflo.com/products/pivot-xpand-travel-system-litemax-infant-car-seat

64. The Infringing Products include a stroller frame comprising "a first back wheel support frame rotated with respect to the first upper tube support frame":

https://www.evenflo.com/products/pivot-xpand-travel-system-litemax-infant-car-seat

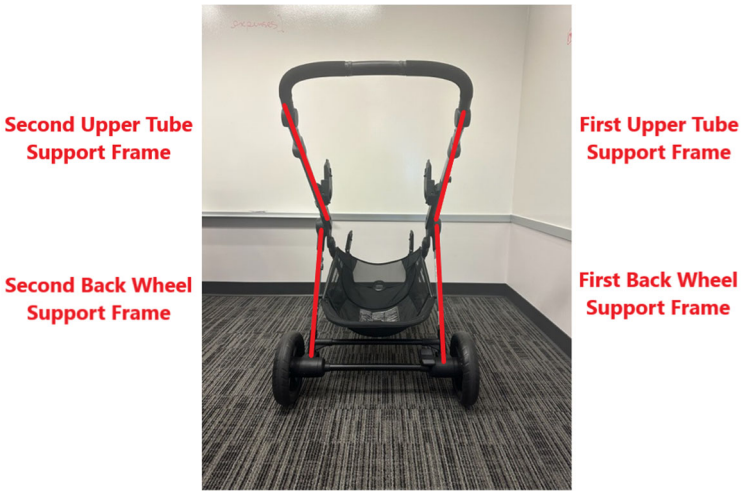

65. The Infringing Products include a stroller frame comprising "a second back wheel support frame rotated with respect to the second upper tube support frame":

https://www.evenflo.com/products/pivot-xpand-travel-system-litemax-infant-car-seat

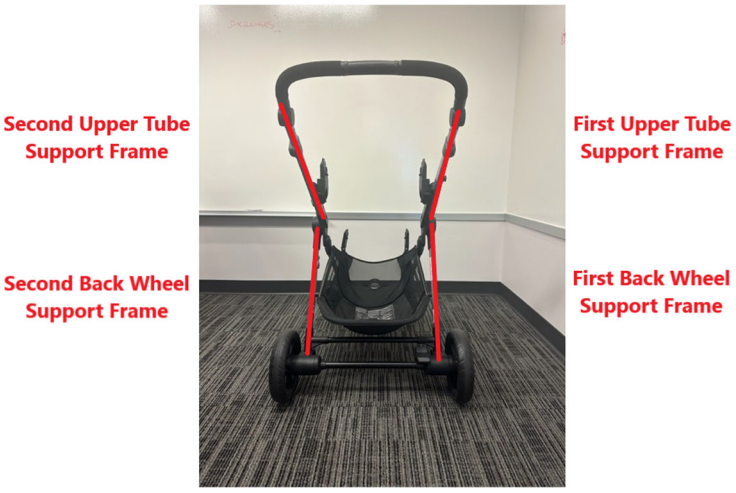

66. The Infringing Products also include "a plurality of wheels comprising at least one front wheel and a plurality of back wheels":

https://www.evenflo.com/products/pivot-xpand-stroller-second-toddler-seat

67. The Infringing Products include "a first seat coupled along the first upper tube support frame and the second upper tube support frame at a first vertical position of the stroller frame":

https://www.evenflo.com/products/pivot-xpand-travel-system-litemax-infant-car-seat

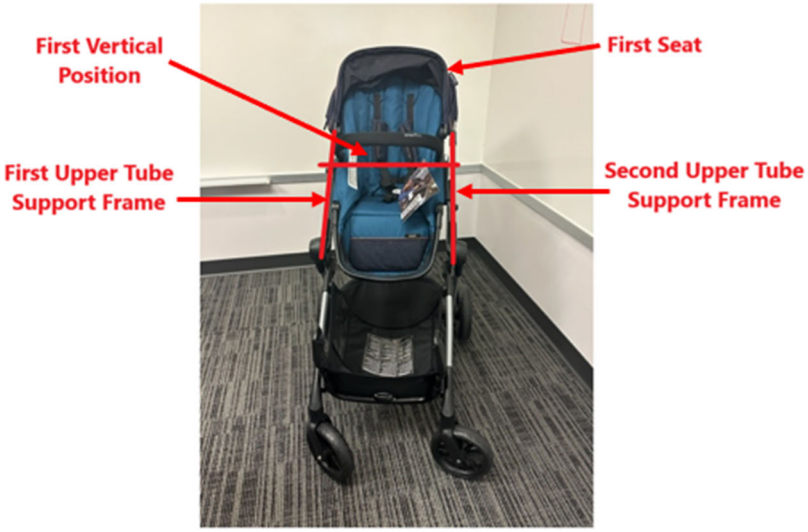

68. The Infringing Products likewise include "a first seat attachment adapter coupled to the first front wheel support frame at a second vertical position of the stroller frame that is below the first vertical position":

https://www.evenflo.com/products/pivot-xpand-stroller-second-toddler-seat

69. The Infringing Products also include "a second seat attachment adapter coupled to the second front wheel support frame at a third vertical position of the stroller frame that is below the first vertical position":

https://www.evenflo.com/products/pivot-xpand-stroller-second-toddler-seat

70. Finally, the Infringing Products include "a second seat [that] is removably coupled to the first seat attachment adapter and the second seat attachment adapter to position the second seat at a fourth vertical position that is below the first vertical position and wherein the second vertical position and the third vertical position are at a same vertical height":

https://www.evenflo.com/products/pivot-xpand-travel-system-litemax-infant-car-seat

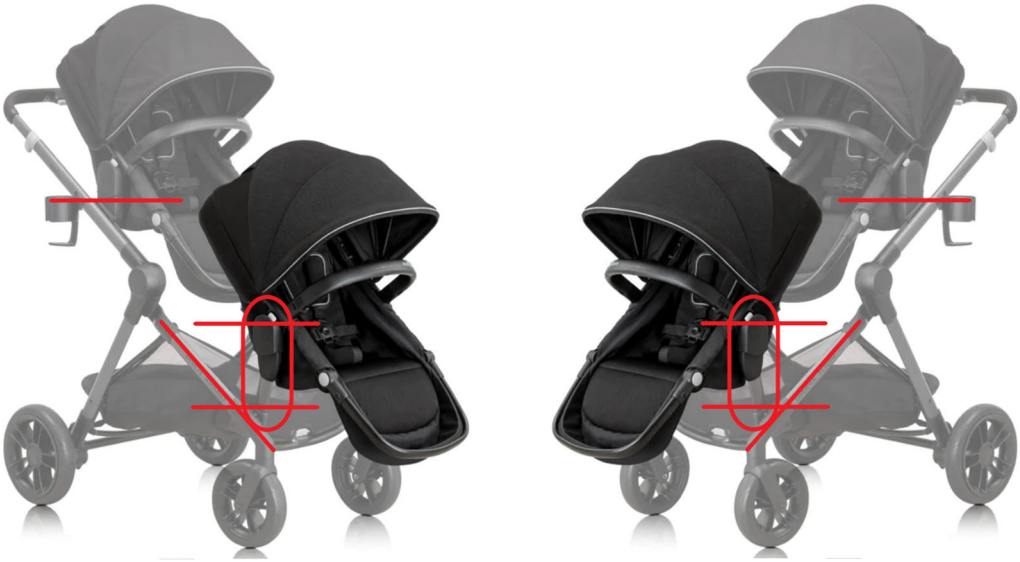

https://www.evenflo.com/products/pivot-xpand-stroller-second-toddler-seat

https://www.evenflo.com/products/pivot-xpand-travel-system-litemax-infant-car-seat

71. EvenFlo does not have a license to practice the technology claimed by the ’568 Patent. EvenFlo does not have any other authority to practice the technology claimed by the ’568 Patent.

72. As a result of EvenFlo’s infringement of the ’568 Patent, Baby Jogger has suffered, and will continue to suffer, damage including, but not limited to, monetary damages. Baby Jogger

is entitled to recover from EvenFlo damages adequate to compensate it for such infringement, which have yet to be determined.

COUNT TWO

(Indirect Infringement of the ’568 Patent under 35 U.S.C. § 271(b))

73. Baby Jogger realleges and incorporates the preceding paragraphs 1-72 as set forth above.

74. EvenFlo has had actual knowledge of the ’568 Patent and its infringement of the ’568 Patent, since at least as early as June 18, 2024, which is the date of filing of the original Complaint, or at the latest, since June 20, 2024, which is the date of service of the Original Complaint. D.I. 1, 5.

75. The application that led to the ’568 Patent (U.S. Patent Application No. 16/832,429) was published on July 16, 2020, and thus was publicly available as of that date. Further, Baby Jogger has virtually marked its City Select strollers since at least as early as January 2023 with, *inter alia*, the ’568 Patent.[2]

76. Baby Jogger and EvenFlo are direct competitors in the baby stroller market. On information and belief, EvenFlo monitors the products and patent filings of its competitors, including Baby Jogger, and therefore would have been aware of the ’568 Patent and the Baby Jogger City Select strollers.

77. Despite such knowledge of the ’568 Patent, or being willfully blind to the existence of the ’568 Patent, EvenFlo has provided, and continues to provide, the Pivot Xpand Second Toddler Seats to its customers and, on information and belief, encourages and aids its customers

[2] https://www.newellbrands.com/patents

to use these products in combination with the EvenFlo Pivot Xpand Travel System in a manner that infringes the ’568 Patent.

78. Since the filing and service of the original Complaint, despite gaining actual knowledge of the ’568 Patent and of its infringement of the ’568 Patent, EvenFlo has continued to knowingly induce its customers to directly infringe the ’568 Patent through one or more of the activities discussed herein.

79. EvenFlo has induced, and continues to induce, infringement of the ’568 Patent by actively, knowingly, and intentionally inducing its customers to directly infringe at least claims 1 and 7-9 of the ’568 Patent via use of its Pivot Xpand Second Toddler Seats in combination with the EvenFlo Pivot Xpand Travel System.

80. EvenFlo has induced, and continues to induce, its customers to directly infringe the ’568 Patent through activities such as marketing the Infringing Products to be used in combination, creating and distributing promotional and product literature, and offering technical support for the Infringing Products, each of which are designed to instruct, encourage, direct, enable, and facilitate the use of its Pivot Xpand Second Toddler Seats in combination with the EvenFlo Pivot Xpand Travel System in a manner that infringes the ’568 Patent.

81. For example, EvenFlo markets its Pivot Xpand Travel System as follows: “the versatile Pivot Xpand Modular Travel System helps you make room for xtra! Expanding the frame to accommodate a second toddler or infant seat takes just seconds”[3] and “[a]ttach two toddler seats, two infant car seats, or one of each. Designed for ultimate flexibility, the frame accommodates up to 23 configurations in the USA for infant and toddler seating at various heights in both parent-

[3] https://www.evenflo.com/pages/pivotxpand-collection

facing and forward-facing modes."[4] EvenFlo also provides its customers with manuals that instruct, encourage, direct, enable, and facilitate the use of the Pivot Xpand Second Toddler Seats in combination with the EvenFlo Pivot Xpand Travel System in a manner that infringes the '568 Patent.[5]

82. On information and belief, EvenFlo has knowingly and intentionally encouraged and aided its customers to directly infringe the '568 Patent and continues to do so.

83. EvenFlo's customers do incorporate the Pivot Xpand Second Toddler Seats with EvenFlo Pivot Xpand Travel System in a manner that infringes the '568 Patent.

84. On information and belief, EvenFlo specifically intended and intends that its actions will induce infringement of the '568 Patent, or subjectively believes that its actions will result in infringement of the '568 Patent. As a direct and proximate result of EvenFlo's inducement of infringement of '568 Patent by its customers, Baby Jogger has been and continues to be damaged.

COUNT THREE

(Indirect Infringement of the '568 Patent under 35 U.S.C. § 271(c))

85. Baby Jogger realleges and incorporates the preceding paragraphs 1-72 as set forth above.

86. EvenFlo has had actual knowledge of the '568 Patent and its infringement of the '568 Patent, since at least as early as June 18, 2024, which is the date of filing of the original Complaint, or at the latest, since June 20, 2024, which is the date of service of the original Complaint. D.I. 1, 5.

---

[4] https://www.evenflo.com/products/pivot-xpand-travel-system-litemax-infant-car-seat
[5] https://www.evenflo.com/pages/instruction-manuals

87. The application that led to the ’568 Patent (U.S. Patent Application No. 16/832,429) was published on July 16, 2020, and thus was publicly available as of that date. Further, Baby Jogger has virtually marked its City Select strollers since at least as early as January 2023, with, *inter alia*, the ’568 Patent.[6]

88. Baby Jogger and EvenFlo are direct competitors in the baby stroller market. On information and belief, EvenFlo monitors the products and patent filings of its competitors, including Baby Jogger, and therefore would have been aware of the ’568 Patent and the Baby Jogger City Select strollers.

89. Despite such knowledge of the ’568 Patent, or being willfully blind to the existence of the ’568 Patent, EvenFlo sells and/or offers for sale in the United States, and imports into the United States, the Pivot Xpand Second Toddler Seats knowing that these components are especially made or adapted for use in the infringement of the ’568 Patent. There is no other use for these components other than to be incorporated with the EvenFlo Pivot Xpand Travel System in a manner that infringes the ’568 Patent.

90. Since the filing and service of the original Complaint, despite receiving actual knowledge of the ’568 Patent, as well as actual knowledge of its infringement of the ’568 Patent, EvenFlo has continued to knowingly contribute to the direct infringement by third parties, including its customers, of the ’568 Patent.

91. EvenFlo has contributed, and continues to contribute, to the infringement of the ’568 Patent by third parties, including at least its customers, by selling and/or offering to sell in the United States, or importing into the United States, the Pivot Xpand Second Toddler Seats,

[6] https://www.newellbrands.com/patents

which are material components of the invention claimed in the ’568 Patent and are not staple articles of commerce suitable for substantial non-infringing use.

92. EvenFlo’s customers who purchase the Pivot Xpand Second Toddler Seats, do so with the sole purpose of incorporating these components with the EvenFlo Pivot Xpand Travel System in a manner that directly infringes the ’568 Patent and in fact do incorporate these components in a manner that directly infringes the ’568 Patent.

93. As a direct and proximate result of EvenFlo’s contributing to the infringement of ’568 Patent by its customers, Baby Jogger has been and continues to be damaged.

COUNT FOUR

(Direct Infringement of the ’231 Patent under 35 U.S.C. § 271(a))

94. Baby Jogger realleges and incorporates the preceding paragraphs 1-56 as set forth above.

95. EvenFlo has been and is directly infringing at least claims 1-3, 15-17, and 19-20 of the ’231 Patent, literally and/or under the doctrine of equivalents, by making, using, offering to sell, and/or selling within the United States, and/or importing into the United States, the Infringing Products.

96. By way of example, the Infringing Products infringe at least claim 1 of the ’231 Patent because they contain each and every limitation of this claim.

97. Without conceding the preamble is a limitation, the Infringing Products each are “[a] stroller system for supporting a front stroller seat and a rear stroller seat”:

https://www.evenflo.com/products/pivot-xpand-travel-system-litemax-infant-car-seat

98. The Infringing Products include "a pair of rear wheels" and "a pair of front wheels":

https://www.evenflo.com/products/pivot-xpand-stroller-second-toddler-seat

99. The Infringing Products also include "a frame including a handle portion, a rear wheel support portion, a front wheel support portion":

https://www.evenflo.com/products/pivot-xpand-travel-system-litemax-infant-car-seat

100. The Infringing Products also include "a folding mechanism connecting the front wheel support portion and the handle portion in both an unfolded configuration and in a folded configuration":

https://www.evenflo.com/products/pivot-xpand-travel-system-litemax-infant-car-seat

101. The Infringing Products likewise include a stroller system "wherein the folding mechanism connects the rear wheel support portion to the front wheel support portion and the handle portion":

https://www.evenflo.com/products/pivot-xpand-travel-system-litemax-infant-car-seat

102. The Infringing Products include a stroller system "wherein the frame includes a stroller seat support portion positioned at a first vertical position adjacent the handle portion":

https://www.evenflo.com/products/pivot-xpand-travel-system-litemax-infant-car-seat

103. The Infringing Products also include a stroller system "wherein the front wheel support portion and the handle portion are substantially parallel when the frame is in the unfolded configuration":

https://www.evenflo.com/products/pivot-xpand-travel-system-litemax-infant-car-seat

104. The Infringing Products include "a front seat attachment configured for attachment to the front wheel support portion at a second vertical position substantially lower than the first vertical position":

https://www.evenflo.com/products/pivot-xpand-travel-system-litemax-infant-car-seat

105. The Infringing Products also include a stroller system "wherein the front seat attachment is configured to releasably connect to and support the front stroller seat in either a forward-facing configuration or a backward-facing configuration":

https://www.evenflo.com/products/pivot-xpand-travel-system-litemax-infant-car-seat

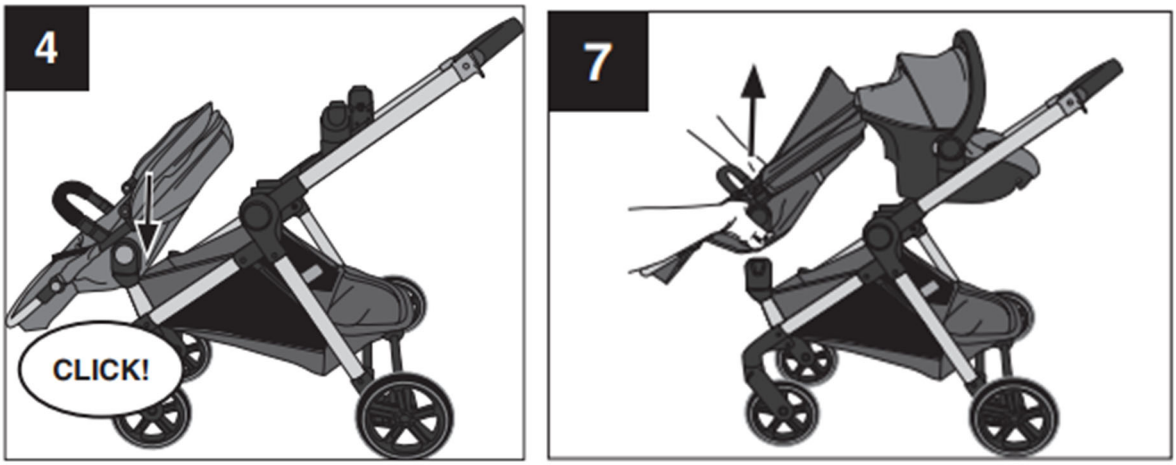

Evenflo PIVOT XPAND Manual (2022), pg. 24-25 (https://images.salsify.com/image/upload/s--xPB_dFlx--/vk8extpm8ntphseidvbm.pdf)

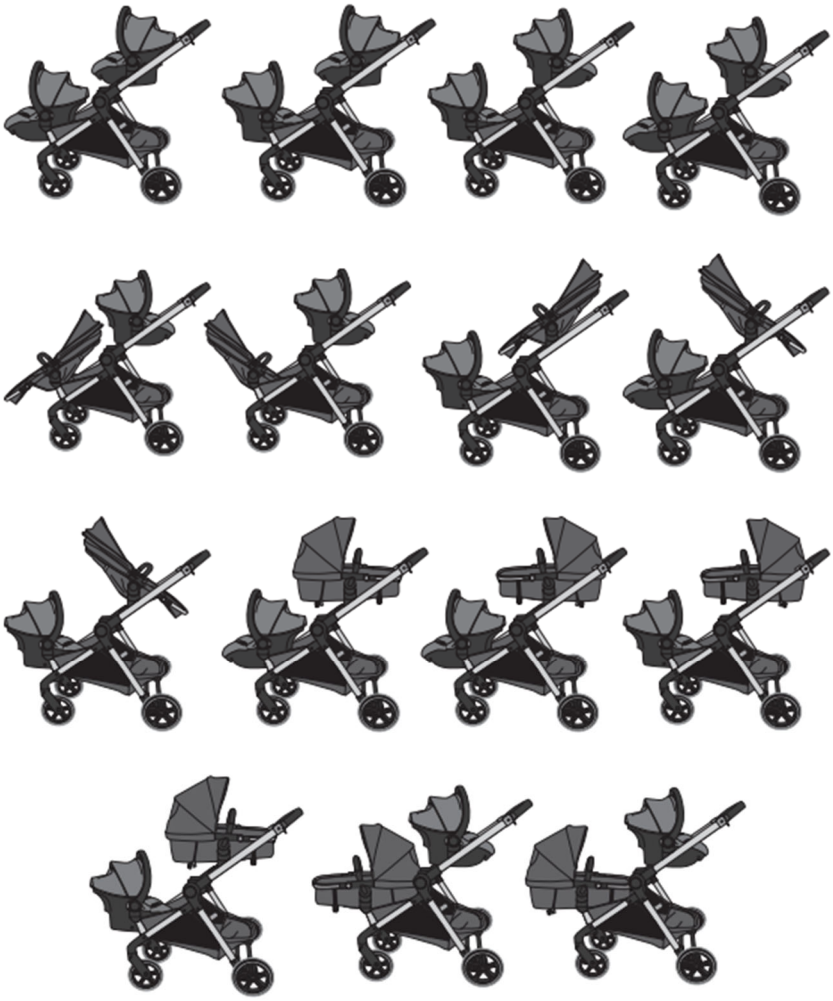

Evenflo PIVOT XPAND Manual (2022), pg. 27 (https://images.salsify.com/image/upload/s--xPB_dFlx--/vk8extpm8ntphseidvbm.pdf)

106. The Infringing Products include a stroller system "wherein the front seat attachment is configured to support the front stroller seat substantially over the front wheels so that a center of gravity of the stroller system is between the front wheels and the rear wheels":

https://www.evenflo.com/products/pivot-xpand-travel-system-litemax-infant-car-seat

107. The Infringing Products also include a stroller system "wherein the rear wheel support portion extends diagonally from the front wheel support portion when the frame is in the unfolded configuration":

https://www.evenflo.com/products/pivot-xpand-travel-system-litemax-infant-car-seat

108. The Infringing Products also include a rear wheel support portion that "is disposed adjacent to both the front wheel support portion and the handle portion when the frame is in the folded configuration":

https://www.evenflo.com/products/pivot-xpand-travel-system-litemax-infant-car-seat

109. The Infringing Products further include a stroller system "wherein the stroller seat support portion positioned at the first vertical position and the front seat attachment at the second vertical position create an inline descending configuration of the rear stroller seat and the front stroller seat":

https://www.evenflo.com/products/pivot-xpand-travel-system-litemax-infant-car-seat

110. EvenFlo does not have a license to practice the technology claimed by the ’231 Patent. EvenFlo does not have any other authority to practice the technology claimed by the ’231 Patent.

111. As a result of EvenFlo’s infringement of the ’231 Patent, Baby Jogger has suffered, and will continue to suffer, damage including, but not limited to, monetary damages. Baby Jogger is entitled to recover from EvenFlo damages adequate to compensate it for such infringement, which have yet to be determined.

COUNT FIVE

(Indirect Infringement of the ’231 Patent under 35 U.S.C. § 271(b))

112. Baby Jogger realleges and incorporates the preceding paragraphs 1-56 and 94-111 as set forth above.

113. EvenFlo has had actual knowledge of the ’231 Patent and its infringement of the ’231 Patent, since at least as early as June 18, 2024, which is the date of filing of the original Complaint, or at the latest, since June 20, 2024, which is the date of service of the original Complaint. D.I. 1,5.

114. Further, Baby Jogger has virtually marked its City Select strollers since at least as early as January 2023 with, *inter alia*, the ’231 Patent.[7]

115. Baby Jogger and EvenFlo are direct competitors in the baby stroller market. On information and belief, EvenFlo monitors the products and patent filings of its competitors, including Baby Jogger, and therefore would have been aware of the ’231 Patent and the Baby Jogger City Select strollers.

[7] https://www.newellbrands.com/patents

116. Despite such knowledge of the ’231 Patent, or being willfully blind to the existence of the ’231 Patent, EvenFlo has provided, and continues to provide, the Pivot Xpand Second Toddler Seats to its customers and, on information and belief, encourages and aids its customers to use these products in combination with the EvenFlo Pivot Xpand Travel System in a manner that infringes the ’231 Patent.

117. Since the filing and service of the original Complaint, despite receiving actual knowledge of the ’231 Patent and of its infringement of the ’231 Patent, EvenFlo has continued to knowingly induce its customers to directly infringe the ’231 Patent through one or more of the activities discussed herein.

118. EvenFlo has induced, and continues to induce, infringement of the ’231 Patent by actively, knowingly, and intentionally inducing its customers to directly infringe at least claims 1-3, 15-17, and 19-20 of the ’231 Patent via use of its Pivot Xpand Second Toddler Seats in combination with the EvenFlo Pivot Xpand Travel System.

119. EvenFlo has induced, and continues to induce, its customers to directly infringe the ’231 Patent through activities such as marketing the Infringing Products to be used in combination, creating and distributing promotional and product literature, and offering technical support for the Infringing Products, each of which are designed to instruct, encourage, direct, enable, and facilitate the use of its Pivot Xpand Second Toddler Seats in combination with the EvenFlo Pivot Xpand Travel System in a manner that infringes the ’231 Patent.

120. For example, EvenFlo markets its Pivot Xpand Travel System as follows: “the versatile Pivot Xpand Modular Travel System helps you make room for xtra! Expanding the frame to accommodate a second toddler or infant seat takes just seconds”[8] and “[a]ttach two toddler seats,

[8] https://www.evenflo.com/pages/pivotxpand-collection

two infant car seats, or one of each. Designed for ultimate flexibility, the frame accommodates up to 23 configurations in the USA for infant and toddler seating at various heights in both parent-facing and forward-facing modes."[9] EvenFlo also provides its customers with manuals that instruct, encourage, direct, enable, and facilitate the use of the Pivot Xpand Second Toddler Seats in combination with the EvenFlo Pivot Xpand Travel System in a manner that infringes the '231 Patent.[10]

121. On information and belief, EvenFlo has knowingly and intentionally encouraged and aided its customers to directly infringe the '231 Patent and continues to do so.

122. EvenFlo's customers do incorporate the Pivot Xpand Second Toddler Seats with EvenFlo Pivot Xpand Travel System in a manner that infringes the '231 Patent.

123. On information and belief, EvenFlo specifically intended and intends that its actions will induce infringement of the '231 Patent, or subjectively believes that its actions will result in infringement of the '231 Patent. As a direct and proximate result of EvenFlo's inducement of infringement of '231 Patent by its customers, Baby Jogger has been and continues to be damaged.

COUNT SIX

(Indirect Infringement of the '231 Patent under 35 U.S.C. § 271(c))

124. Baby Jogger realleges and incorporates the preceding paragraphs 1-56 and 94-111 as set forth above.

125. EvenFlo has had actual knowledge of the '231 Patent and its infringement of the '231 Patent, since at least as early as June 18, 2024, which is the date of filing of the original

[9] https://www.evenflo.com/products/pivot-xpand-travel-system-litemax-infant-car-seat
[10] https://www.evenflo.com/pages/instruction-manuals

Complaint, or at the latest, since June 20, 2024, which is the date of service of the original Complaint. D.I. 1, 5.

126. Further, Baby Jogger has virtually marked its City Select strollers since at least as early as January 2023 with, *inter alia*, the ’231 Patent.[11]

127. Baby Jogger and EvenFlo are direct competitors in the baby stroller market. On information and belief, EvenFlo monitors the products and patent filings of its competitors, including Baby Jogger, and therefore would have been aware of the ’231 Patent and the Baby Jogger City Select strollers.

128. Despite such knowledge of the ’231 Patent, or being willfully blind to the existence of the ’231 Patent, EvenFlo sells and/or offers for sale in the United States, and imports into the United States, the Pivot Xpand Second Toddler Seats knowing that these components are especially made or adapted for use in the infringement of the ’231 Patent. There is no other use for these components other than to be incorporated with the EvenFlo Pivot Xpand Travel System in a manner that infringes the ’231 Patent.

129. Since the filing and service of the original Complaint, despite receiving actual knowledge of the ’231 Patent, as well as actual knowledge of its infringement of the ’231 Patent, EvenFlo has continued to knowingly contribute to the direct infringement by third parties, including its customers, of the ’231 Patent.

130. EvenFlo has contributed, and continues to contribute, to the infringement of the ’231 Patent by third parties, including at least its customers, by selling and/or offering to sell in the United States, or importing into the United States, the Pivot Xpand Second Toddler Seats,

[11] https://www.newellbrands.com/patents

which are material components of the invention claimed in the ’231 Patent and are not staple articles of commerce suitable for substantial non-infringing use.

131. EvenFlo’s customers who purchase the Pivot Xpand Second Toddler Seats, do so with the sole purpose of incorporating these components with the EvenFlo Pivot Xpand Travel System in a manner that directly infringes the ’231 Patent and in fact do incorporate these components in a manner that directly infringes the ’231 Patent.

132. As a direct and proximate result of EvenFlo’s contributing to the infringement of ’231 Patent by its customers, Baby Jogger has been and continues to be damaged.

COUNT SEVEN

(Direct Infringement of the ’771 Patent under 35 U.S.C. § 271(a))

133. Baby Jogger realleges and incorporates the preceding paragraphs 1-56 as set forth above.

134. EvenFlo has been and is directly infringing at least claims 1-4 and 13-15 of the ’771 Patent, literally and/or under the doctrine of equivalents, by making, using, offering to sell, and/or selling within the United States, and/or importing into the United States, the Infringing Products.

135. By way of example, the Infringing Products infringe at least claim 1 of the ’771 Patent because they contain each and every limitation of this claim.

136. Without conceding the preamble is a limitation, the Infringing Products each are “[a] stroller convertible from a single seat configuration to a double seat configuration without increasing its footprint”:

https://www.evenflo.com/products/pivot-xpand-travel-system-litemax-infant-car-seat

137. The Infringing Products include "two rear wheels" and "only two front wheels":

https://www.evenflo.com/products/pivot-xpand-stroller-second-toddler-seat

138. The Infringing Products also include "a frame supported by the front and rear wheels and comprising a handle portion":

https://www.evenflo.com/products/pivot-xpand-stroller-second-toddler-seat

139. The Infringing Products also include "left and right foldable support members extending from the handle portion towards a front end portion of the frame":

https://www.evenflo.com/products/pivot-xpand-stroller-second-toddler-seat

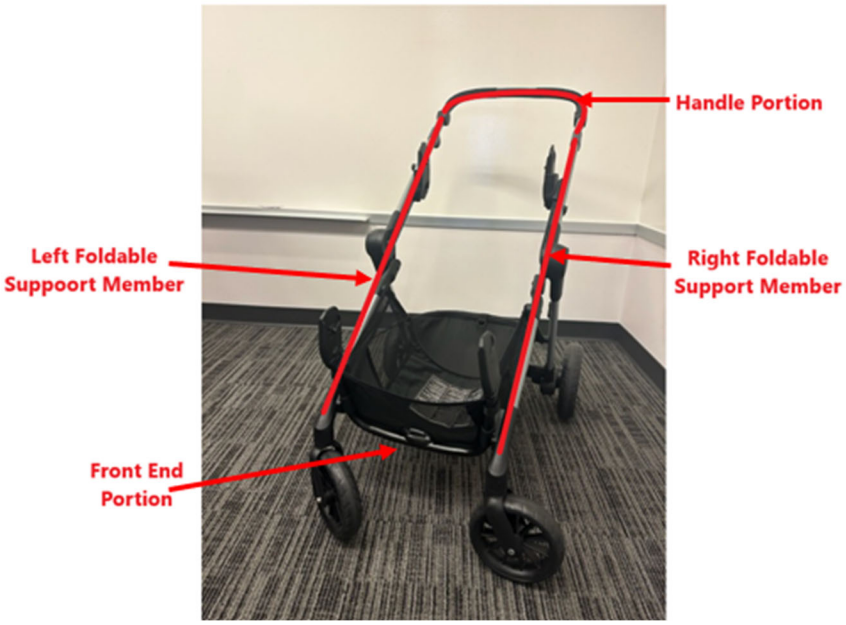

140. The Infringing Products further include "foldable support members extending in a parallel, spaced relationship and substantially within a plane that runs diagonally from the handle portion towards the front end portion of the frame":

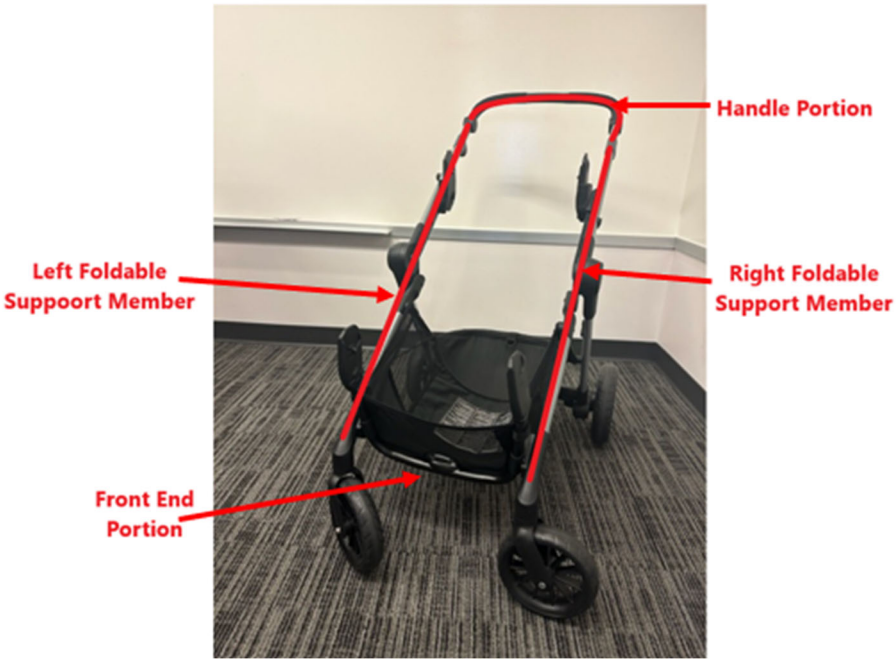

141. The Infringing Products include "a first seat releasably connected to the frame at a first vertical position that is closer to the handle portion than the front end portion":

https://www.evenflo.com/products/pivot-xpand-stroller-second-toddler-seat

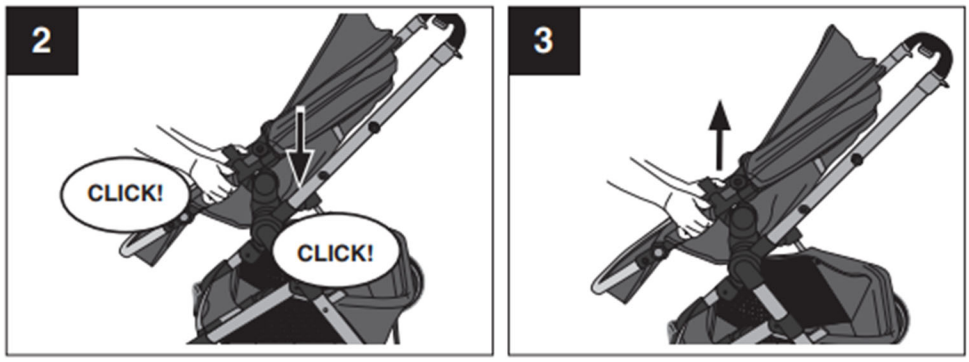

To attach toddler seat, slide seat onto the mounts until they both click into place on both sides of the frame. The toddler seat may be attached forward-facing or parent-facing.

Evenflo PIVOT XPAND Manual (2022), pg. 12 (https://images.salsify.com/image/upload/s--xPB_dFlx--/vk8extpm8ntphseidvbm.pdf)

142. The Infringing Products further include "the first seat being connectable to the frame in either a forward or backward facing position to form the single seat configuration":

https://www.evenflo.com/products/pivot-xpand-stroller-second-toddler-seat

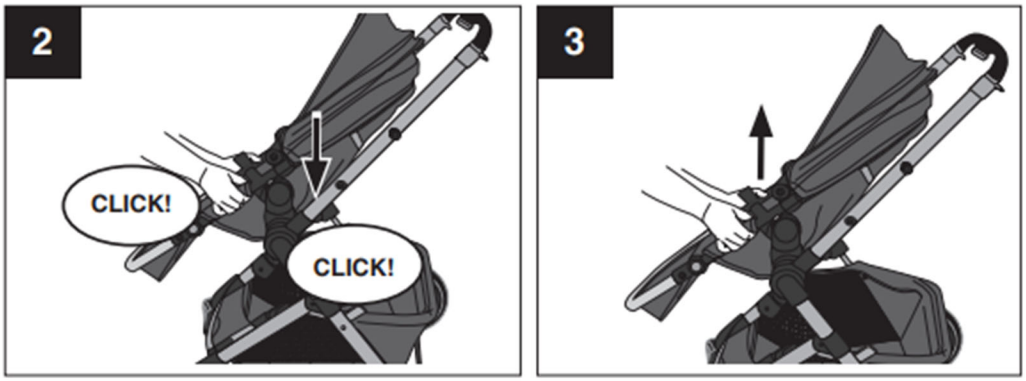

To attach toddler seat, slide seat onto the mounts until they both click into place on both sides of the frame. The toddler seat may be attached forward-facing or parent-facing.

Evenflo PIVOT XPAND Manual (2022), pg. 12 (https://images.salsify.com/image/upload/s--xPB_dFlx--/vk8extpm8ntphseidvbm.pdf)

143. The Infringing Products also include a stroller "wherein the frame receives an optional second seat assembly to form the double seat configuration":

https://www.evenflo.com/products/pivot-xpand-travel-system-litemax-infant-car-seat

144. The Infringing Products include a second seat assembly that comprises: "right and left seat attachments disposed along the right and left support members of the frame, respectively, at a second vertical position that is lower than the first vertical position, and wherein the second vertical position is closer to the front end portion than the handle portion":

https://www.evenflo.com/products/pivot-xpand-travel-system-litemax-infant-car-seat

https://www.evenflo.com/products/pivot-xpand-travel-system-litemax-infant-car-seat

145. The Infringing Products likewise include "a second seat connectable to the right and left seat attachments in either a forward or backward facing position":

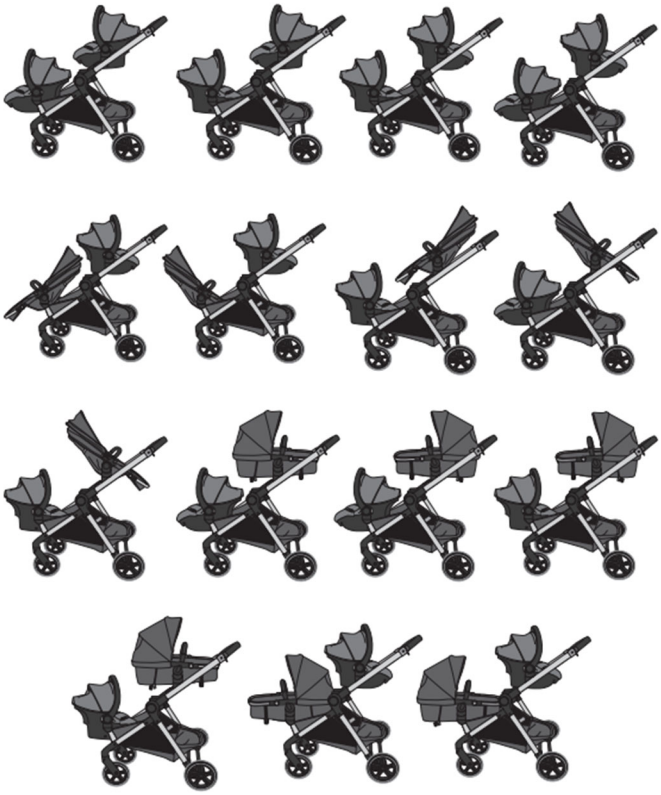

Evenflo PIVOT XPAND Manual (2022), pg. 27 (https://images.salsify.com/image/upload/s--xPB_dFlx--/vk8extpm8ntphseidvbm.pdf)

146. The Infringing Products also include a stroller "wherein the first seat and the second seat, when connected to the frame, are arranged in an inline descending configuration substantially along the plane of the frame":

https://www.evenflo.com/products/pivot-xpand-travel-system-litemax-infant-car-seat

147. EvenFlo does not have a license to practice the technology claimed by the '771 Patent. EvenFlo does not have any other authority to practice the technology claimed by the '771 Patent.

148. As a result of EvenFlo's infringement of the '771 Patent, Baby Jogger has suffered, and will continue to suffer, damage including, but not limited to, monetary damages. Baby Jogger is entitled to recover from EvenFlo damages adequate to compensate it for such infringement, which have yet to be determined.

COUNT EIGHT

(Indirect Infringement of the '771 Patent under 35 U.S.C. § 271(b))

149. Baby Jogger realleges and incorporates the preceding paragraphs 1-56 and 133-148 as set forth above.

150. EvenFlo has had actual knowledge of the ’771 Patent and its infringement of the ’771 Patent, since at least as early as June 18, 2024, which is the date of filing of the original Complaint, or at the latest, since June 20, 2024, which is the date of service of the original Complaint. D.I. 1, 5.

151. The application that led to the ’771 Patent (U.S. Patent Application No. 17/876,492) was published on November 24, 2022, and thus was publicly available as of that date.

152. Baby Jogger and EvenFlo are direct competitors in the baby stroller market. On information and belief, EvenFlo monitors the products and patent filings of its competitors, including Baby Jogger, and therefore would have been aware of the ’771 Patent and the Baby Jogger City Select strollers.

153. Despite such knowledge of the ’771 Patent, or being willfully blind to the existence of the ’771 Patent, EvenFlo has provided, and continues to provide, the Pivot Xpand Second Toddler Seats to its customers and, on information and belief, encourages and aids its customers to use these products in combination with the EvenFlo Pivot Xpand Travel System in a manner that infringes the ’771 Patent.

154. Since the filing and service of the original Complaint, despite gaining actual knowledge of the ’771 Patent and of its infringement of the ’771 Patent, EvenFlo has continued to knowingly induce its customers to directly infringe the ’771 Patent through one or more of the activities discussed herein.

155. EvenFlo has induced, and continues to induce, infringement of the ’771 Patent by actively, knowingly, and intentionally inducing its customers to directly infringe at least claims 1-

4 and 13-15 of the ’771 Patent via use of its Pivot Xpand Second Toddler Seats in combination with the EvenFlo Pivot Xpand Travel System.

156. EvenFlo has induced, and continues to induce, its customers to directly infringe the ’771 Patent through activities such as marketing the Infringing Products to be used in combination, creating and distributing promotional and product literature, and offering technical support for the Infringing Products, each of which are designed to instruct, encourage, direct, enable, and facilitate the use of its Pivot Xpand Second Toddler Seats in combination with the EvenFlo Pivot Xpand Travel System in a manner that infringes the ’771 Patent.

157. For example, EvenFlo markets its Pivot Xpand Travel System as follows: “the versatile Pivot Xpand Modular Travel System helps you make room for xtra! Expanding the frame to accommodate a second toddler or infant seat takes just seconds”[12] and “[a]ttach two toddler seats, two infant car seats, or one of each. Designed for ultimate flexibility, the frame accommodates up to 23 configurations in the USA for infant and toddler seating at various heights in both parent-facing and forward-facing modes.”[13] EvenFlo also provides its customers with manuals that instruct, encourage, direct, enable, and facilitate the use of the Pivot Xpand Second Toddler Seats in combination with the EvenFlo Pivot Xpand Travel System in a manner that infringes the ’771 Patent.[14]

158. On information and belief, EvenFlo has knowingly and intentionally encouraged and aided its customers to directly infringe the ’771 Patent and continues to do so.

159. EvenFlo’s customers do incorporate the Pivot Xpand Second Toddler Seats with EvenFlo Pivot Xpand Travel System in a manner that infringes the ’771 Patent.

---

[12] https://www.evenflo.com/pages/pivotxpand-collection
[13] https://www.evenflo.com/products/pivot-xpand-travel-system-litemax-infant-car-seat
[14] https://www.evenflo.com/pages/instruction-manuals

160. On information and belief, EvenFlo specifically intended and intends that its actions will induce infringement of the ’771 Patent, or subjectively believes that its actions will result in infringement of the ’771 Patent. As a direct and proximate result of EvenFlo’s inducement of infringement of ’771 Patent by its customers, Baby Jogger has been and continues to be damaged.

COUNT NINE

(Indirect Infringement of the ’771 Patent under 35 U.S.C. § 271(c))

161. Baby Jogger realleges and incorporates the preceding paragraphs 1-56 and 133-148 as set forth above.

162. EvenFlo has had actual knowledge of the ’771 Patent and its infringement of the ’771 Patent, since at least as early as June 18, 2024, which is the date of filing of the original Complaint, or at the latest, since June 20, 2024, which is the date of service of the original Complaint. D.I. 1, 5.

163. The application that led to the ’771 Patent (U.S. Patent Application No. 17/876,492) was published on November 24, 2022, and thus was publicly available as of that date.

164. Baby Jogger and EvenFlo are direct competitors in the baby stroller market. On information and belief, EvenFlo monitors the products and patent filings of its competitors, including Baby Jogger, and therefore would have been aware of the ’771 Patent and the Baby Jogger City Select strollers.

165. Despite such knowledge of the ’568 Patent, or being willfully blind to the existence of the ’771 Patent, EvenFlo sells and/or offers for sale in the United States, and imports into the United States, the Pivot Xpand Second Toddler Seats knowing that these components are especially made or adapted for use in the infringement of the ’771 Patent. There is no other use for

these components other than to be incorporated with the EvenFlo Pivot Xpand Travel System in a manner that infringes the ’771 Patent.

166. Since the filing and service of the original Complaint, despite receiving actual knowledge of the ’771 Patent, as well as actual knowledge of its infringement of the ’771 Patent, EvenFlo has continued to knowingly contribute to the direct infringement by third parties, including its customers, of the ’771 Patent.

167. EvenFlo has contributed, and continues to contribute, to the infringement of the ’771 Patent by third parties, including at least its customers, by selling and/or offering to sell in the United States, or importing into the United States, the Pivot Xpand Second Toddler Seats, which are material components of the invention claimed in the ’771 Patent and are not staple articles of commerce suitable for substantial non-infringing use.

168. EvenFlo’s customers who purchase the Pivot Xpand Second Toddler Seats, do so with the sole purpose of incorporating these components with the EvenFlo Pivot Xpand Travel System in a manner that directly infringes the ’771 Patent and in fact do incorporate these components in a manner that directly infringes the ’771 Patent.

169. As a direct and proximate result of EvenFlo’s contributing to the infringement of ’771 Patent by its customers, Baby Jogger has been and continues to be damaged.

COUNT TEN

(Direct Infringement of the ’682 Patent under 35 U.S.C. § 271(a))

170. Baby Jogger realleges and incorporates the preceding paragraphs 1-56 as set forth above.

171. EvenFlo has been and is directly infringing at least claims 1, 8-13, and 15 of the ’682 Patent, literally and/or under the doctrine of equivalents, by making, using, offering to sell,

and/or selling within the United States, and/or importing into the United States, the Infringing Products.

172. By way of example, the Infringing Products infringe at least claim 1 of the ’682 Patent because they contain each and every limitation of this claim.

173. Without conceding the preamble is a limitation, the Infringing Products each are “[a] stroller, comprising: a stroller frame comprising a handle portion and a front end portion”:

https://www.evenflo.com/products/pivot-xpand-stroller-second-toddler-seat

174. The Infringing Products also include “a plurality of wheels comprising a plurality of back wheels”:

https://www.evenflo.com/products/pivot-xpand-stroller-second-toddler-seat

175. The Infringing Products include "a first seat coupled to the stroller frame at a first vertical position of the stroller frame, wherein the first seat is disposed closer to the handle portion than the front end portion of the stroller frame":

https://www.evenflo.com/products/pivot-xpand-stroller-second-toddler-seat

176. The Infringing Products further include "a first seat attachment housing coupled to the stroller frame at a second vertical position of the stroller frame that is below the first vertical position":

https://www.evenflo.com/products/pivot-xpand-stroller-second-toddler-seat

177. The Infringing Products are strollers "wherein a first front wheel and a second front wheel extend from the front end of the stroller":

https://www.evenflo.com/products/pivot-xpand-stroller-second-toddler-seat

178. The Infringing Products include "a second seat attachment housing coupled to the stroller frame at a third vertical position of the stroller frame that is below the first vertical position, wherein the third vertical position is closer to the front end portion than the handle portion":

https://www.evenflo.com/products/pivot-xpand-stroller-second-toddler-seat

179. The Infringing Products also include "a first seat attachment adapter spaced from and coupled to the first seat attachment housing by a first attachment frame member":

https://www.evenflo.com/products/pivot-xpand-stroller-second-toddler-seat

180. The Infringing Products include "a second seat attachment adapter spaced from and coupled to the second seat attachment housing by a second attachment frame member":

181. The Infringing Products further include a stroller "wherein the first seat and the second seat, when connected to the frame, are arranged in an inline descending configuration along the stroller frame":

https://www.evenflo.com/products/pivot-xpand-travel-system-litemax-infant-car-seat

182. EvenFlo does not have a license to practice the technology claimed by the ’682 Patent. EvenFlo does not have any other authority to practice the technology claimed by the ’682 Patent.

183. As a result of EvenFlo’s infringement of the ’682 Patent, Baby Jogger has suffered, and will continue to suffer, damage including, but not limited to, monetary damages. Baby Jogger is entitled to recover from EvenFlo damages adequate to compensate it for such infringement, which have yet to be determined.

COUNT ELEVEN

(Indirect Infringement of the ’682 Patent under 35 U.S.C. § 271(b))

184. Baby Jogger realleges and incorporates the preceding paragraphs 1-56 and 170-183 as set forth above.

185. EvenFlo has had actual knowledge of the ’682 Patent and its infringement of the ’682 Patent, since at least as early as June 18, 2024, which is the date of filing of the original Complaint, or at the latest, since June 20, 2024, which is the date of service of the original Complaint. D.I. 1, 5.

186. The application that led to the ’682 Patent (U.S. Patent Application No. 16/903,292) was published on December 10, 2020, and thus was publicly available as of that date.

187. Baby Jogger and EvenFlo are direct competitors in the baby stroller market. On information and belief, EvenFlo monitors the products and patent filings of its competitors, including Baby Jogger, and therefore would have been aware of the ’682 Patent and the Baby Jogger City Select strollers.

188. Despite such knowledge of the ’682 Patent, or being willfully blind to the existence of the ’682 Patent, EvenFlo has provided, and continues to provide, the Pivot Xpand Second

Toddler Seats to its customers and, on information and belief, encourages and aids its customers to use these products in combination with the EvenFlo Pivot Xpand Travel System in a manner that infringes the ’682 Patent.

189. Since the filing and service of the original Complaint, despite gaining actual knowledge of the ’682 Patent and of its infringement of the ’682 Patent, EvenFlo has continued to knowingly induce its customers to directly infringe the ’682 Patent through one or more of the activities discussed herein.

190. EvenFlo has induced, and continues to induce, infringement of the ’682 Patent by actively, knowingly, and intentionally inducing its customers to directly infringe at least claims 1, 8-13, and 15 of the ’682 Patent via use of its Pivot Xpand Second Toddler Seats in combination with the EvenFlo Pivot Xpand Travel System.

191. EvenFlo has induced, and continues to induce, its customers to directly infringe the ’682 Patent through activities such as marketing the Infringing Products to be used in combination, creating and distributing promotional and product literature, and offering technical support for the Infringing Products, each of which are designed to instruct, encourage, direct, enable, and facilitate the use of its Pivot Xpand Second Toddler Seats in combination with the EvenFlo Pivot Xpand Travel System in a manner that infringes the ’682 Patent.

192. For example, EvenFlo markets its Pivot Xpand Travel System as follows: “the versatile Pivot Xpand Modular Travel System helps you make room for xtra! Expanding the frame to accommodate a second toddler or infant seat takes just seconds”[15] and “[a]ttach two toddler seats, two infant car seats, or one of each. Designed for ultimate flexibility, the frame accommodates up to 23 configurations in the USA for infant and toddler seating at various heights

[15] https://www.evenflo.com/pages/pivotxpand-collection

in both parent-facing and forward-facing modes."[16] EvenFlo also provides its customers with manuals that instruct, encourage, direct, enable, and facilitate the use of the Pivot Xpand Second Toddler Seats in combination with the EvenFlo Pivot Xpand Travel System in a manner that infringes the '682 Patent.[17]

193. On information and belief, EvenFlo has knowingly and intentionally encouraged and aided its customers to directly infringe the '682 Patent and continues to do so.

194. EvenFlo's customers do incorporate the Pivot Xpand Second Toddler Seats with EvenFlo Pivot Xpand Travel System in a manner that infringes the '682 Patent.

195. On information and belief, EvenFlo specifically intended and intends that its actions will induce infringement of the '682 Patent, or subjectively believes that its actions will result in infringement of the '682 Patent. As a direct and proximate result of EvenFlo's inducement of infringement of '682 Patent by its customers, Baby Jogger has been and continues to be damaged.

COUNT TWELVE

(Indirect Infringement of the '682 Patent under 35 U.S.C. § 271(c))

196. Baby Jogger realleges and incorporates the preceding paragraphs 1-56 and 170-183 as set forth above.

197. EvenFlo has had actual knowledge of the '682 Patent and its infringement of the '682 Patent, since at least as early as June 18, 2024, which is the date of filing of the original

[16] https://www.evenflo.com/products/pivot-xpand-travel-system-litemax-infant-car-seat
[17] https://www.evenflo.com/pages/instruction-manuals

Complaint, or at the latest, since June 20, 2024, which is the date of service of the original Complaint. D.I. 1, 5.

198. The application that led to the ’682 Patent (U.S. Patent Application No. 16/903,292) was published on December 10, 2020, and thus was publicly available as of that date.

199. Baby Jogger and EvenFlo are direct competitors in the baby stroller market. On information and belief, EvenFlo monitors the products and patent filings of its competitors, including Baby Jogger, and therefore would have been aware of the ’682 Patent and the Baby Jogger City Select strollers.

200. Despite such knowledge of the ’682 Patent, or being willfully blind to the existence of the ’682 Patent, EvenFlo sells and/or offers for sale in the United States, and imports into the United States, the Pivot Xpand Second Toddler Seats knowing that these components are especially made or adapted for use in the infringement of the ’682 Patent. There is no other use for these components other than to be incorporated with the EvenFlo Pivot Xpand Travel System in a manner that infringes the ’682 Patent.

201. Since the filing and service of the original Complaint, despite receiving actual knowledge of the ’682 Patent, as well as actual knowledge of its infringement of the ’682 Patent, EvenFlo has continued to knowingly contribute to the direct infringement by third parties, including its customers, of the ’682 Patent.

202. EvenFlo has contributed, and continues to contribute, to the infringement of the ’682 Patent by third parties, including at least its customers, by selling and/or offering to sell in the United States, or importing into the United States, the Pivot Xpand Second Toddler Seats, which are material components of the invention claimed in the ’682 Patent and are not staple articles of commerce suitable for substantial non-infringing use.

203. EvenFlo's customers who purchase the Pivot Xpand Second Toddler Seats, do so with the sole purpose of incorporating these components with the EvenFlo Pivot Xpand Travel System in a manner that directly infringes the '682 Patent and in fact do incorporate these components in a manner that directly infringes the '682 Patent.

204. As a direct and proximate result of EvenFlo's contributing to the infringement of '682 Patent by its customers, Baby Jogger has been and continues to be damaged.

COUNT THIRTEEN

(Direct Infringement of the '729 Patent under 35 U.S.C. § 271(a))

205. Baby Jogger realleges and incorporates the preceding paragraphs 1-56 as set forth above.

206. EvenFlo has been and is directly infringing at least claims 1-3 and 15-22 of the '729 Patent, literally and/or under the doctrine of equivalents, by making, using, offering to sell, and/or selling within the United States, and/or importing into the United States, the Infringing Products.

207. By way of example, the Infringing Products infringe at least claim 1 of the '729 Patent because they contain each and every limitation of this claim.

208. Without conceding the preamble is a limitation, the Infringing Products each are "[a] stroller system for supporting a front stroller seat and a rear stroller seat":

https://www.evenflo.com/products/pivot-xpand-travel-system-litemax-infant-car-seat

209. The Infringing Products include "a pair of rear wheels" and "a pair of front wheels":

https://www.evenflo.com/products/pivot-xpand-stroller-second-toddler-seat

210. The Infringing Products further include "a frame including a handle portion, a rear wheel support portion, a front wheel support portion":

https://www.evenflo.com/products/pivot-xpand-travel-system-litemax-infant-car-seat

211. The Infringing Products likewise include "a folding mechanism connecting the front wheel support portion and the handle portion in both an unfolded configuration and in a folded configuration":

https://www.evenflo.com/products/pivot-xpand-travel-system-litemax-infant-car-seat

212. The Infringing Products also include a stroller system "wherein the frame includes a stroller seat support portion positioned at a first vertical position adjacent the handle portion":

https://www.evenflo.com/products/pivot-xpand-travel-system-litemax-infant-car-seat

213. The Infringing Products further include a frame "wherein the front wheel support portion and the handle portion are parallel when the frame is in the unfolded configuration":

https://www.evenflo.com/products/pivot-xpand-travel-system-litemax-infant-car-seat

214. The Infringing Products also include "a front seat attachment configured for attachment to the front wheel support portion at a second vertical position substantially lower than the first vertical position":

https://www.evenflo.com/products/pivot-xpand-travel-system-litemax-infant-car-seat

215. The Infringing Products likewise include a front seat attachment that "is configured to releasably connect to and support the front stroller seat in either a forward-facing configuration or a backward-facing configuration":

https://www.evenflo.com/products/pivot-xpand-travel-system-litemax-infant-car-seat

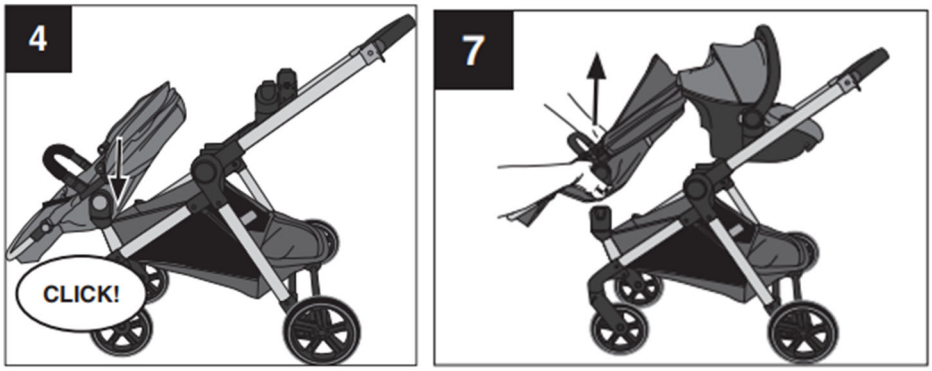

Evenflo PIVOT XPAND Manual (2022), pg. 24-25 (https://images.salsify.com/image/upload/s--xPB_dFlx--/vk8extpm8ntphseidvbm.pdf)

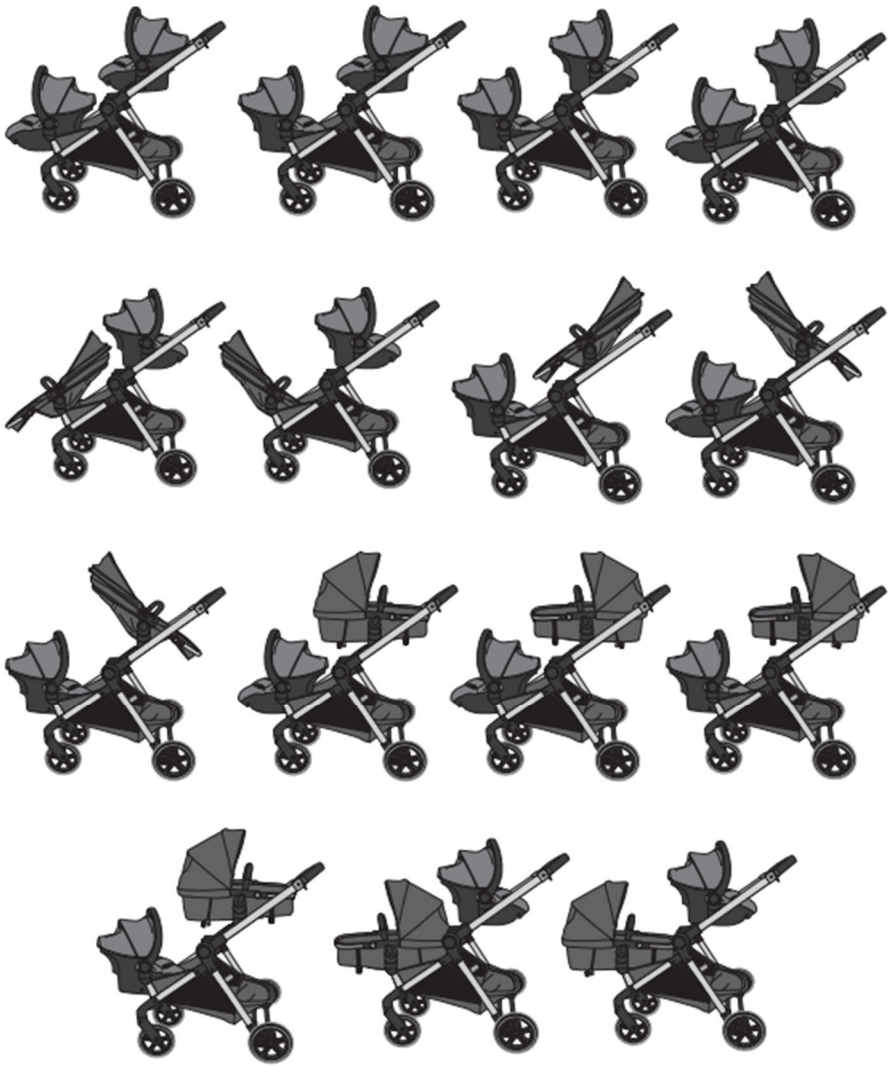

Evenflo PIVOT XPAND Manual (2022), pg. 27 (https://images.salsify.com/image/upload/s--xPB_dFlx--/vk8extpm8ntphseidvbm.pdf)

216. The Infringing Products also include a front seat attachment that "is configured to support the front stroller seat substantially over the front wheels so that a center of gravity of the stroller system is between the front wheels and the rear wheels":

https://www.evenflo.com/products/pivot-xpand-travel-system-litemax-infant-car-seat

217. The Infringing Products further include a "rear wheel support portion [that] extends diagonally relative to the front wheel support portion when the frame is in the unfolded configuration,":

https://www.evenflo.com/products/pivot-xpand-travel-system-litemax-infant-car-seat

218. The Infringing Products also include a rear wheel support portion that "is disposed adjacent to both the front wheel support portion and the handle portion when the frame is in the folded configuration":

https://www.evenflo.com/products/pivot-xpand-travel-system-litemax-infant-car-seat

219. The Infringing Products further include a "stroller seat support portion positioned at the first vertical position and the front seat attachment at the second vertical position create an inline descending configuration of the rear stroller seat and the front stroller seat."

https://www.evenflo.com/products/pivot-xpand-travel-system-litemax-infant-car-seat

220. EvenFlo does not have a license to practice the technology claimed by the '729 Patent. EvenFlo does not have any other authority to practice the technology claimed by the '729 Patent.

221. As a result of EvenFlo's infringement of the '729 Patent, Baby Jogger has suffered, and will continue to suffer, damage including, but not limited to, monetary damages. Baby Jogger is entitled to recover from EvenFlo damages adequate to compensate it for such infringement, which have yet to be determined.

COUNT FOURTEEN

(Indirect Infringement of the '729 Patent under 35 U.S.C. § 271(b))

222. Baby Jogger realleges and incorporates the preceding paragraphs 1-56 and 205-221 as set forth above.

223. EvenFlo has had actual knowledge of the '729 Patent and its infringement of the '729 Patent, since at least as early as June 18, 2024, which is the date of filing of the original Complaint, or at the latest, since June 20, 2024, which is the date of service of the original Complaint. D.I. 1, 5.

224. The application that led to the '729 Patent (U.S. Patent Application No. 18/051,053) was published on March 2, 2023, and thus was publicly available as of that date.

225. Baby Jogger and EvenFlo are direct competitors in the baby stroller market. On information and belief, EvenFlo monitors the products and patent filings of its competitors, including Baby Jogger, and therefore would have been aware of the '729 Patent and the Baby Jogger City Select strollers.

226. Despite such knowledge of the '729 Patent, or being willfully blind to the existence of the '729 Patent, EvenFlo has provided, and continues to provide, the Pivot Xpand Second Toddler Seats to its customers and, on information and belief, encourages and aids its customers to use these products in combination with the EvenFlo Pivot Xpand Travel System in a manner that infringes the '729 Patent.

227. Since the filing and service of the original Complaint, despite receiving actual knowledge of the ’729 Patent, as well as actual knowledge of its infringement of the ’729 Patent, EvenFlo has continued to knowingly induce its customers to directly infringe the ’729 Patent through one or more of the activities discussed herein.

228. EvenFlo has induced, and continues to induce, infringement of the ’729 Patent by actively, knowingly, and intentionally inducing its customers to directly infringe at least claims 1-3 and 15-22 of the ’729 Patent via use of its Pivot Xpand Second Toddler Seats in combination with the EvenFlo Pivot Xpand Travel System.

229. EvenFlo has induced, and continues to induce, its customers to directly infringe the ’729 Patent through activities such as marketing the Infringing Products to be used in combination, creating and distributing promotional and product literature, and offering technical support for the Infringing Products, each of which are designed to instruct, encourage, direct, enable, and facilitate the use of its Pivot Xpand Second Toddler Seats in combination with the EvenFlo Pivot Xpand Travel System in a manner that infringes the ’729 Patent.

230. For example, EvenFlo markets its Pivot Xpand Travel System as follows: “the versatile Pivot Xpand Modular Travel System helps you make room for xtra! Expanding the frame to accommodate a second toddler or infant seat takes just seconds”[18] and “[a]ttach two toddler seats, two infant car seats, or one of each. Designed for ultimate flexibility, the frame accommodates up to 23 configurations in the USA for infant and toddler seating at various heights in both parent-facing and forward-facing modes.”[19] EvenFlo also provides its customers with manuals that instruct, encourage, direct, enable, and facilitate the use of the Pivot Xpand Second

[18] https://www.evenflo.com/pages/pivotxpand-collection
[19] https://www.evenflo.com/products/pivot-xpand-travel-system-litemax-infant-car-seat

Toddler Seats in combination with the EvenFlo Pivot Xpand Travel System in a manner that infringes the ’729 Patent.[20]

231. On information and belief, EvenFlo has knowingly and intentionally encouraged and aided its customers to directly infringe the ’729 Patent and continues to do so.

232. EvenFlo’s customers do incorporate the Pivot Xpand Second Toddler Seats with EvenFlo Pivot Xpand Travel System in a manner that infringes the ’729 Patent.

233. On information and belief, EvenFlo specifically intended and intends that its actions will induce infringement of the ’729 Patent, or subjectively believes that its actions will result in infringement of the ’729 Patent. As a direct and proximate result of EvenFlo’s inducement of infringement of ’729 Patent by its customers, Baby Jogger has been and continues to be damaged.

COUNT FIFTEEN

(Indirect Infringement of the ’729 Patent under 35 U.S.C. § 271(c))

234. Baby Jogger realleges and incorporates the preceding paragraphs 1-56 and 205-221 as set forth above.

235. EvenFlo has had actual knowledge of the ’729 Patent and its infringement of the ’729 Patent, since at least as early as June 18, 2024, which is the date of filing of the original Complaint, or at the latest, June 20, 2024, which is the date of service of the original Complaint. D.I. 1, 5.

236. The application that led to the ’729 Patent (U.S. Patent Application No. 18/051,053) was published on March 2, 2023, and thus was publicly available as of that date.

[20] https://www.evenflo.com/pages/instruction-manuals

237. Baby Jogger and EvenFlo are direct competitors in the baby stroller market. On information and belief, EvenFlo monitors the products and patent filings of its competitors, including Baby Jogger, and therefore would have been aware of the ’729 Patent and the Baby Jogger City Select strollers.

238. Despite such knowledge of the ’729 Patent, or being willfully blind to the existence of the ’729 Patent, EvenFlo sells and/or offers for sale in the United States, and imports into the United States, the Pivot Xpand Second Toddler Seats knowing that these components are especially made or adapted for use in the infringement of the ’729 Patent. There is no other use for these components other than to be incorporated with the EvenFlo Pivot Xpand Travel System in a manner that infringes the ’729 Patent.

239. Since the filing and service of the original Complaint, despite receiving actual knowledge of the ’729 Patent, as well as actual knowledge of its infringement of the ’729 Patent, EvenFlo has continued to knowingly contribute to the direct infringement by third parties, including its customers, of the ’729 Patent.

240. EvenFlo has contributed, and continues to contribute, to the infringement of the ’729 Patent by third parties, including at least its customers, by selling and/or offering to sell in the United States, or importing into the United States, the Pivot Xpand Second Toddler Seats, which are material components of the invention claimed in the ’729 Patent and are not staple articles of commerce suitable for substantial non-infringing use.

241. EvenFlo’s customers who purchase the Pivot Xpand Second Toddler Seats, do so with the sole purpose of incorporating these components with the EvenFlo Pivot Xpand Travel System in a manner that directly infringes the ’729 Patent and in fact do incorporate these components in a manner that directly infringes the ’729 Patent.

242. As a direct and proximate result of EvenFlo's contributing to the infringement of '729 Patent by its customers, Baby Jogger has been and continues to be damaged.

JURY TRIAL DEMAND

Pursuant to Rule 38(b) of the Federal Rules of Civil Procedure, Baby Jogger hereby demands a trial by jury on all issues so triable.

PRAYER FOR RELIEF

WHEREFORE, Baby Jogger respectfully requests that this Court enter judgment and provide relief as follows:

a. Entering judgment that EvenFlo has infringed one or more claims of each of the Asserted Patents, in violation of 35 U.S.C. § 271(a)-(c);

b. Awarding damages adequate to compensate Baby Jogger for EvenFlo's infringement of the Asserted Patents, together with pre-judgment and post-judgment interest and costs, pursuant to 35 U.S.C. § 284;

c. Ordering that EvenFlo account for additional damages for any and all periods of infringement not included in the damages awarded by this Court or jury, including any post-verdict infringement;

d. Permanently enjoining EvenFlo, and its respective offers, agents, servants, employees, attorneys, and all persons in active concert or participation with any of them directly or indirectly, from making, using, offering for sale, and/or selling within the United States, and/or importing into the United States, the Infringing Products and any products that infringe the Asserted Patents prior to the expiration of those patents, including any extensions; and

e. Awarding Baby Jogger such other equitable or legal relief as the Court may deem just and proper.

ASHBY & GEDDES

/s/ Andrew C. Mayo
Andrew C. Mayo (#5207)
500 Delaware Avenue, 8th Floor
P.O. Box 1150
Wilmington, DE 19899
(302) 654-1888
amayo@ashbygeddes.com

Attorneys for Plaintiff Baby Jogger, LLC

Of Counsel:

John W. Harbin
Gregory J. Carlin
Walter Hill Levie III
Robert J. Leonard
MEUNIER CARLIN & CURFMAN LLC
999 Peachtree Street NE, Suite 1300
Atlanta, GA 30309
(404) 645-7700

Dated: October 15, 2024