(19) **Japan Patent Office (JP)** (11) Patent Application Laid-Open No.

(12) **Patent Application Publication (A)** **S61-283734**

| (51) Int. Cl.[4] | ID Number | JPO File Number | (43) Publication Date: December 13, 1986 (Showa 61) |
|---|---|---|---|
| **F 02 D 19/06** | | 6718-3G | |
| **F 02 M 13/08** | | 7713-3G | |

Request for Examination: Not requested yet Number of Inventions: 1 (5 pages in total)

(54) Title of the Invention: GASOLINE-LPG COMBINED ENGINE

(21) Japanese Patent Application No. S60-124725

(22) Filing date: June 7, 1985 (Showa 60)

(72) Inventor: Toshiaki NAKAFUSHI Mazda Motor Corporation 3-1, Shinchi, Fuchu-cho, Aki-gun, Hiroshima, Japan

(72) Inventor: Shigeki YAMASHITA Mazda Motor Corporation 3-1, Shinchi, Fuchu-cho, Aki-gun, Hiroshima, Japan

(71) Applicant: Mazda Motor Corporation 3-1, Shinchi, Fuchu-cho, Aki-gun, Hiroshima, Japan

(74) Representative: Hiroshi MAEDA, Patent attorney



**EX1005**
**HARBOR FREIGHT TOOLS**
**IPR2025-01121**
**Page 1 of 12**

## DESCRIPTION

## 1. TITLE OF THE INVENTION

## GASOLINE-LPG COMBINED ENGINE

## 3. DETAILED DESCRIPTION OF THE INVENTION

(Industrially Applicable Field)

[0001] The present invention relates to a gasoline-LPG combined engine configured to selectively use gasoline or LPG as a fuel.

(Known Technology)

[0002] There have been known that a gasoline-LPG combined engine which is configured to be able to selectively supply gasoline or LPG to an engine so that the engine is operated as a gasoline engine by supplying gasoline when an output of the engine is required, whereas the engine is operated as an LPG engine by supplying LPG when economy is required (see, for example, Japanese Patent Application Laid-Open No. S57-102547).

(Problems to be Solved by the Invention)

[0003] Meanwhile, in the case when gasoline is supplied by a carburetor including a float chamber in the above-mentioned known gasoline-LPG combined engine, the operation of the gasoline engine and the operation of the LPG engine are switched by selectively supplying gasoline to the float chamber and supplying LPG to the engine.

[0004] However, in this case, even if the supply of gasoline to the float chamber is interrupted in order to switch from the gasoline engine operation state to the LPG engine operation, a predetermined amount of gasoline still remains in the float chamber, so that this residual gasoline is sucked into an intake passage

and mixed with LPG, and as a result, the air-fuel mixture has an over-rich air-fuel ratio. Furthermore, since the level of the gasoline in the float chamber decreases due to this suction of the residual gasoline, even if the supply of gasoline to the float chamber is started in order to reversely switch the LPG engine operating state to the gasoline engine operation state, the suction of the gasoline from the float chamber to the intake passage is delayed until the level of the gasoline recovers to a predetermined value, and as a result, the air-fuel ratio of the air-fuel mixture becomes over-lean.

[0005] The present invention has been made in view of such points, and an object of the present invention is, in a gasoline-LPG combined engine comprising a carburetor equipped with a float chamber, to enable switching between a gasoline engine operation and an LPG engine operation during the operation of the engine without causing becoming over-rich of an air-fuel mixture when switching to the LPG engine operation and becoming over-lean when switching to the gasoline engine operation by blocking suction of gasoline from the float chamber to an intake passage during operation of the LPG engine.

(Means for Solving Problems)

[0006] In order to achieve the above-mentioned object, the solution means of the present invention is based on the premise that it includes a carburetor comprising a float chamber and being disposed in an intake passage of the engine; an LPG mixer disposed in series with the carburetor in the intake passage; a gasoline supplying means configured to supply gasoline to the carburetor; an LPG supplying means configured to supply LPG to the LPG mixer; and

[0007] a switching means configured to selectively operate the gasoline supplying means and the LPG supplying means. Furthermore, the solution means includes a control valve configured to allow or block suctioning of

gasoline from the float chamber to the intake passage, wherein the control valve is configured to operate to block the suctioning of gasoline when the operation of the LPG supplying means is selected by the switching means.

(Action)

[0008] According to the above-mentioned configuration, in the present invention, during the operation of the engine, at the time of switching the LPG engine operation in which the operation of the LPG supplying means is selected by the switching means, the control valve blocks the suction of gasoline from the float chamber to the intake passage, so that the gasoline remaining in the float chamber is not sucked out to the intake passage, which blocks the air-fuel mixture from being over-rich. On the other hand, at the time of switching to the gasoline engine operation, the residual gasoline at the above-mentioned predetermined level is rapidly sucked out to the intake passage, which blocks the air-fuel mixture from being over-lean.

(Examples)

[0009] Examples of the present invention will be described below based on the drawings.

[0010] FIG. 1 shows First Example of the present invention. In this drawing, E denotes an engine with a specification of an existing carburetor, I denotes an intake passage connected to the engine E, and a two-barrel type carburetor 1 is disposed in the intake passage I. Venturi portions 2a and 2b are formed in a primary side intake passage $I_1$ and a secondary side intake passage $I_2$ of the carburetor 1, respectively, and throttle valves 3a and 3b are disposed downstream of the Venturi portions 2a and 2b. Furthermore, a choke valve 4 for choking the primary side intake passage $I_1$ when the engine is cold is disposed on the upstream side of the Venturi portion 2a of the primary side intake passage $I_1$. Furthermore, 5 denotes a float chamber in which gasoline

is stored, and the float chamber 5 is communicated with the Venturi portions 2a and 2b of the carburetor 1 via a fuel outflow passage 6 having a small diameter, so that the gasoline in the float chamber 5 is sucked into the Venturi portions 2a and 2b and atomized and supplied during the operation of the engine E.

[0011] Furthermore, an LPG mixer 7 for vaporizing LPG and supplying the vaporized LPG to the intake passage I is mounted on the upper portion of the carburetor 1 in the intake passage I.

[0012] The float chamber 5 is communicated with a gasoline tank 11 by a gasoline supplying passage 8 via a pump 9 and a filter 10, thereby constituting a gasoline supplying means 12 configured to supply the gasoline in the gasoline tank 11 to the carburetor 1 via the float chamber 5. Furthermore, the LPG mixer 7 is communicated with an LPG bomb 16 as an LPG supplying means by an LPG supplying passage 13 via a vaporizer 14 for vaporizing LPG and a filter 15.

[0013] Furthermore, a gasoline cut valve 17 configured to close the gasoline supplying passage 8 in response to a cut signal (described later) is provided in the gasoline supplying passage 8 so as to intervene between the float chamber 5 and the pump 9. On the other hand, an LPG cut valve 18 configured to close the LPG supplying passage 13 in response to a cut signal (described later) is provided in the LPG supplying passage 13 so as to intervene between the vaporizer 14 and the filter 15. Both of the cut valves 17 and 18 are connected to a gasoline-side contact point 19a and an LPG side contact point 19b of a two-pole fuel switching switch 19, respectively, and a switching means 22 in which a common contact point 19a of the fuel switching switch 19 is connected to a battery 21 via an ignition switch 20. When the ignition switch 20 is turned ON, when the engine E is operated as a gasoline engine, the fuel switching switch 19 is switched to the gasoline-side contact point 19a and a cut signal is input to the LPG cut valve 18 to block the supply of LPG to the

LPG mixer 7 and operate the gasoline supplying means 12 to supply gasoline to the carburetor 1, whereas when the engine E is operated as an LPG engine, the fuel switching switch 19 is switched to the LPG side contact point 19b and a cut signal is input to the gasoline cut valve 17, whereby the gasoline supply to the carburetor 1 is blocked, and an LPG supplying means (LPG bomb) 16 is operated to switch so as to supply LPG to the LPG mixer 10, is provided.

[0014] Furthermore, a control valve 23 configured to open and close the fuel outflow passage 6 is disposed so as to intervene in the fuel outflow passage 6. the control valve 23 is connected to the gasoline contact point 19a of the fuel switching switch 19, and is configured so that when the fuel switching switch 19 is switched to the gasoline contact point 19a side, that is, when the operation of the gasoline supplying means 12 is selected, the control valve 23 is turned ON upon receiving a cut signal to open the fuel outflow passage 6, thereby allowing the gasoline to be sucked from the float chamber 5 to the Venturi portions 2a and 2b, whereas when the fuel switching switch 19 is switched to the LPG contact point 19b side, that is, when the operation of the LPG bomb 16 is selected, the control valve 23 is turned OFF by not receiving a cut signal to close the fuel outflow passage 6, thereby blocking the suction of the gasoline from the float chamber 5 to the Venturi portions 2a and 2b.

[0015] Incidentally, 24 refers to an air cleaner mounted on the upper portion of the LPG mixer 7.

[0016] Therefore, in the above-described Example, during the operation of the engine, when the operation is switched to the LPG engine operation, the control valve 23 is turned OFF to close the fuel supplying passage 6 so that the gasoline remaining in the float chamber 5 is not sucked into the Venturi portions 2a and 2b. Therefore, becoming over-rich of the air-fuel mixture due to the suction of the gasoline can be prevented, and the level of the gasoline in the float chamber 5 can be maintained at a predetermined value. Furthermore, during the engine operation, when the operation is switched to

the gasoline engine operation, the control valve 23 is turned ON by a cut signal from the gasoline-side contact point 19a of the fuel switching switch 19 to open the fuel supplying passage 6, whereby the gasoline remaining in the float chamber 5 at a predetermined level is quickly sucked into the Venturi portions 2a and 2b, thereby preventing the air-fuel mixture from becoming over-lean. Therefore, it is possible to appropriately switch between the gasoline engine operation and the LPG engine operation during the engine operation while securing a good combustion state by preventing the air-fuel mixture from becoming over-rich when switching to the LPG engine operation and from becoming over-lean when switching to the gasoline engine operation.

[0017] Furthermore, since it is only necessary to mount the LPG mixer 7 on the upper portion of the carburetor 1 in the intake passage I in the engine E having an existing carburetor specification, it is possible to provide a gasoline-LPG combined engine more easily than that in the case of newly designing it, and the cost therefor can be reduced.

[0018] Furthermore, FIG. 2 shows Second Example of the present invention, in which a control valve 23' configured to open an air bleed passage 25, of which the upstream side is open to the upstream side of a primary side intake passage $I_1$ and the downstream side is communicating with a fuel outflow passage 6, is disposed so as to intervene in the air bleed passage 25, and the control valve 23' is connected to a gasoline contact point 19a of a fuel switching switch 19 so that when the fuel switching switch 19 is switched to the gasoline contact point 19a side, the control valve 23' is turned ON by outputting a cut signal to open the air bleed passage 25 to supply air to a fuel outflow passage 6 to allow gasoline to be sucked from a float chamber 5 to Venturi portions 2a and 2b, whereas when the fuel switching switch 19 is switched to the LPG contact point 19b side, the control valve 23' is turned OFF to close the air bleed passage 25 by stopping the output of the cut signal to block the supply of the air to the fuel outflow passage 6 to block the gasoline from being sucked out of the float chamber 5 to the Venturi portions 2a and 2b. Second Example

exerts similar action and effect to those exerted by the above-mentioned First Example.

(Effects of the Invention)

[0019] As described above, according to the gasoline-LPG combined engine of the present invention, since the engine is configured so that the suction of gasoline from the float chamber of the carburetor to the intake passage is blocked during the operation as an LPG engine, the air-fuel mixture due to the suction of the gasoline remaining in the float chamber to the intake passage during the switching from the engine operation state to the LPG engine operation state can be prevented from being over-rich, whereas during switching to the gasoline engine operation state, the air-fuel mixture can be prevented from being over-lean by suction of the residual gasoline to the intake passage at the above-mentioned predetermined amount. Therefore, gasoline engine operation and LPG engine operation can be appropriately switched during the operation of the engine while keeping a fine combustion state.

**4. BRIEF DESCRIPTION OF THE DRAWINGS**

[0020] FIGs. 1 and 2 show Examples of the present invention, wherein FIG. 1 is an overall schematic diagram showing First Example, and FIG. 2 is a diagram corresponding to FIG. 1 showing Second Example.

[0021] E ... Engine, I ... Intake passage, 1 ... Carburetor, 5 ... Float chamber, 6 ... Fuel outflow passage, 7 ... LPG mixer, 12 ... Gasoline supplying means, 16 ... LPG bomb, 19 ... Fuel switching switch, 22 ... Switching means, 23, 23' ... Control valve.

## 2. Claims

1. A gasoline-LPG combined engine, comprising:

a carburetor comprising a float chamber and being disposed in an intake passage of the engine;

an LPG mixer disposed in series with the carburetor in the intake passage;

a gasoline supplying means configured to supply gasoline to the carburetor;

an LPG supplying means configured to supply LPG to the LPG mixer; and

a switching means configured to selectively operate the gasoline supplying means and the LPG supplying means; and

further comprising a control valve configured to allow or block suctioning of gasoline from the float chamber to the intake passage,

wherein the control valve is configured to operate to block the suctioning of the gasoline when the operation of the LPG supplying means is selected by the switching means.

FIG. 1

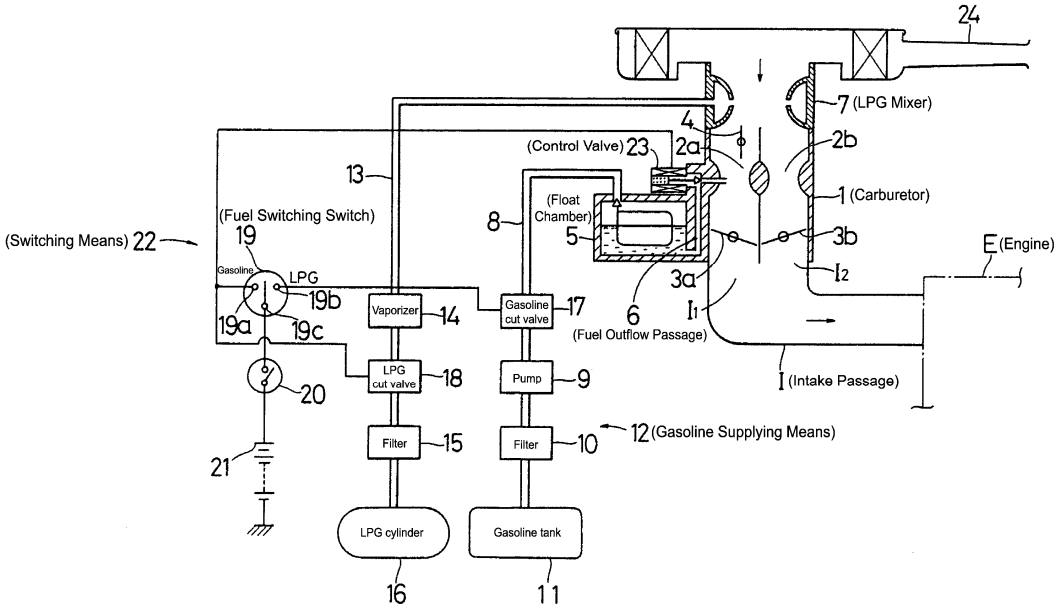
24
7 (LPG Mixer)
4
2a
2b
(Control Valve) 23
13
1 (Carburetor)
(Float Chamber)
8
5
3b
(Fuel Switching Switch)
(Switching Means) 22
19
E (Engine)
Gasoline
LPG
19b
3a
I2
19a
19c
Vaporizer
14
Gasoline cut valve
17
6
I1
(Fuel Outflow Passage)
LPG cut valve
18
Pump
9
I (Intake Passage)
20
Filter
15
Filter
10
12 (Gasoline Supplying Means)
21
LPG cylinder
Gasoline tank
16
11

# FIG. 2

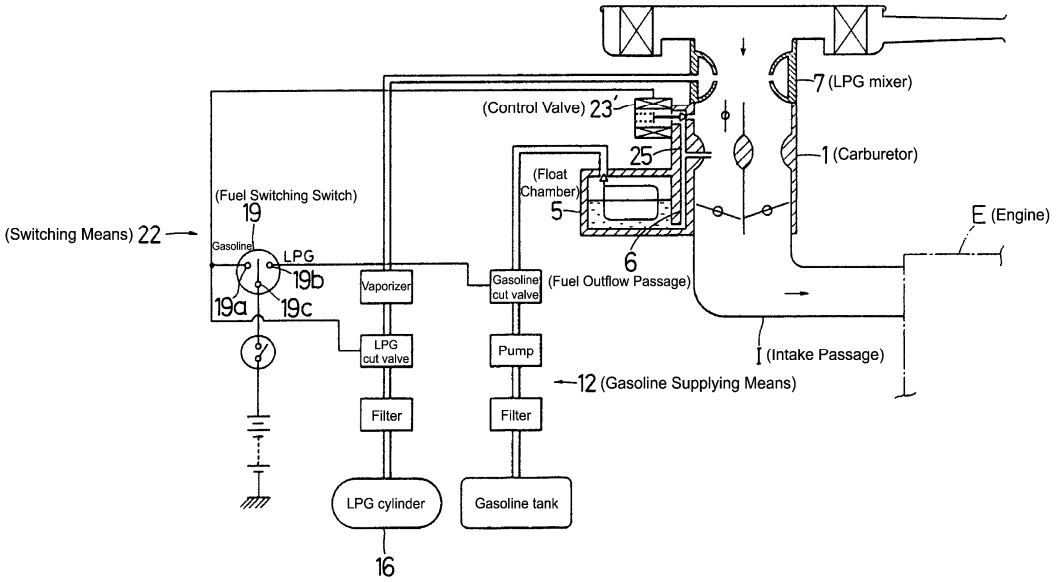
(Control Valve) 23'
25
7 (LPG mixer)
1 (Carburetor)
(Float Chamber)
5
6
(Fuel Switching Switch)
19
(Switching Means) 22
Gasoline
LPG
19a
19b
19c
Vaporizer
Gasoline cut valve
(Fuel Outflow Passage)
E (Engine)
LPG cut valve
Pump
I (Intake Passage)
12 (Gasoline Supplying Means)
Filter
Filter
LPG cylinder
Gasoline tank
16

Questel

# TRANSLATOR CERTIFICATION

Date: October 16, 2024

To whom it may concern:

I, Junichi Urushiyama, a translator fluent in the Japanese and English languages, on behalf of Questel Translations, do solemnly and sincerely declare that the following is, to the best of my knowledge and belief, a true and correct translation of the document(s) listed below in a form that best reflects the intention and meaning of the original text.

I declare that all statements made herein of my own knowledge are true and that all statements made on information and belief are believed to be true. I further declare that these statements were made with the knowledge that willful false statements and the like are punishable by fine, imprisonment, or both, under 18 U.S.C. § 1001 and may jeopardize the validity or enforceability the patent subject to inter partes review.

The document is designated as:

- Japanese Patent Application Publication JPS61283734A

[translator signature]
Junichi Urushiyama
Signature

Linguist Name Printed
Junichi Urushiyama
Print