DuroMax NEXT GENERATION POWER SYSTEMS

DUAL FUEL

DUAL FUEL HYBRID ELITE XP4400EH

OWNERS MANUAL

Product Support	Product Information, Application, Service Info & Warranty Questions
Please email us at support@duromaxgenerators.com or call (800) 629-3325 Monday – Friday 6:00 am – 6:00 pm (PST)	

EX1017
HARBOR FREIGHT TOOLS
IPR2025-01121

TABLE OF CONTENTS

TABLE OF CONTENTS	2
FEATURES	3
SAFETY INFORMATION	4 - 6
COMPONENT IDENTIFICATION	7 - 9
PREPARING THE GENERATOR	9 - 12
STARTING THE GENERATOR GASOLINE	13
STARTING THE GENERATOR PROPANE	14
USING THE GENERATOR	15 - 18
WATTAGE REFERENCE CHART	16
MAINTENANCE	
Service Schedule	19
Checking the Oil	20
Changing the Oil	21
Air Cleaner Maintenance	22
Fuel Filter Cup Cleaning	22
Spark Plug Maintenance	23
Emptying the Gas Tank	23
Storage and Transportation	24
GENERATOR SPECIFICATIONS	25
TROUBLESHOOTING	26
WHEEL KIT ASSEMBLY	27
SERVICE INFORMATION	
Changing/Inspecting the Carbon Brush	28
Changing/Inspecting the AVR	29
Maintenance Log	30
Wiring Diagram	31
Parts Lists	32-35

FEATURES

- Dual Fuel Option, LPG or Gasoline.
- Durable 7.0 HP, Air Cooled Overhead Valve Engine.
- Heavy Duty Steel Frame with Four Point Fully Isolated Motor Mounts for Smooth and Quiet Operation.
- Wheel and Handle Kit for Easy Transporting.
- Full Power Panel with Engine Shutoff Switch, Volt Meter, Circuit Breaker, and Power Outlets.
- (2) Fully Protected 120V Outlets & (1) 120V/240V Twist-Lock Outlet.
- 8 Hour Run Time.
- All Steel 4.0 Gal. Fuel Tank with EZ-Read Gauge.
- Low Oil Shut-Off Protects Engine.
- Super Quiet Muffler Reduces Engine Noise.
- Meets EPA Emission Standards.

This manual provides information regarding the operation and maintenance of these products. We have made every effort to ensure the accuracy of the information in this manual. We reserve the right to change this product at any time without prior notice.

Notice Regarding Emissions

Engines that are certified to comply with U.S. EPA emission regulations for SORE (Small off Road Equipment), are certified to operate on regular unleaded gasoline, and may include the following emission control systems: (EM) Engine Modifications and (TWC) Three-Way Catalyst (if so equipped).

GENERAL SAFETY PROCEDURES

Please familiarize yourself with the following safety symbols and words:
The safety alert symbol is used with one of the safety words (**DANGER**, **CAUTION**, or **WARNING**) to alert you of hazards. Please pay attention to these hazard notices both in this manual and on the generator.

DANGER: Indicates a hazard that will result in serious injury or death if instructions are not followed.

WARNING: Indicates a strong possibility of causing serious injury or death if instructions are not followed.

CAUTION: Indicates a possibility of personal injury or equipment damage if instructions are not followed.

⚠ **DANGER:** This generator produces poisonous carbon monoxide gas when running. This gas is both odorless and colorless. Even if you do not see or smell gas, carbon monoxide may still be present. Breathing this poison can lead to headaches, dizziness, drowsiness, and eventually death.

- Use outdoors ONLY in non-confined areas.
- Keep several feet of clearance on all sides to allow proper ventilation of the generator.

⚠ **WARNING:** The exhaust from this product contains chemicals known to the State of California to cause cancer, birth defects, or other reproductive harm.

⚠ **WARNING:** This generator may emit highly flammable and explosive gasoline vapors, which can cause severe burns or even death. A nearby open flame can lead to an explosion even if not directly in contact with gas.

- Do not operate near an open flame.
- Do not smoke near generator.
- Always operate on a firm, level surface.
- Always turn generator off before refueling. Allow generator to cool for at least 2 minutes before removing fuel cap. Loosen cap slowly to relieve pressure in tank.
- Do not overfill gas tank. Gas may expand during operation. Do not fill to the top of the tank.
- Always check for spilled gas before operating.
- Empty the gasoline tank before storing or transporting the generator.
- Before transporting, turn fuel valve to the off position and disconnect the spark plug.

GENERAL SAFETY PROCEDURES (Continued)

⚠ **WARNING:** This generator produces a powerful voltage, which can result in electrocution.

- ALWAYS ground the generator before using it (see the "Grounding the Generator" portion of the "PREPARING THE GENERATOR FOR USE section).
- Generator should only be plugged into electrical devices, either directly or with an extension cord. NEVER connect to a building electrical system without a qualified electrician. Such connections must comply with local electrical laws and codes. Failure to comply can create a backflow of power, which may result in serious injury or death to utility workers.
- Use a ground fault circuit interrupter (GFCI) in highly conductive areas such as metal decking or steel work. GFCIs are available in-line with some extension cords.
- Do not use uncovered in rainy or wet conditions.
- Do not touch bare wires or receptacles (outlets).
- Do not allow children or non-qualified persons to operate.

⚠ **WARNING:** This generator produces heat when running. Temperatures near exhaust can exceed 150°F (65°C).

- Do not touch hot surfaces. Pay attention to warning labels on the generator denoting hot parts of the machine.
- Allow generator to cool several minutes after use before touching engine or areas which heat during use.

⚠ **CAUTION:** Misuse of this generator can damage it or shorten its life.

- Use the generator only for its intended purposes.
- Operate only on dry, level surfaces.
- Allow generator to run for 3 - 5 minutes before connecting any electrical devices.
- Shut off and disconnect any malfunctioning devices from generator.
- Do not exceed the Wattage capacity of the generator by plugging in more electrical devices than the unit can handle (see "PRECAUTIONS-OVERLOADING THE GENERATOR").
- Do not turn on electrical devices until after they are connected to the generator.
- Turn off all connected electrical devices, and turn off the breaker, before stopping the generator.

GENERAL SAFETY PROCEDURES (Continued)

In addition to the above safety notices, please familiarize yourself with the safety and hazard markings on the generator.

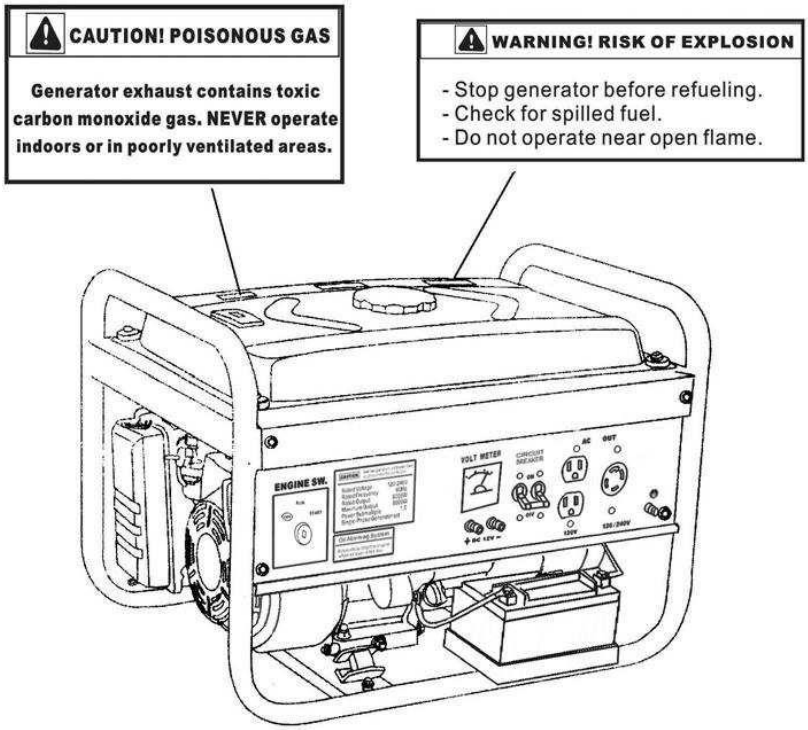

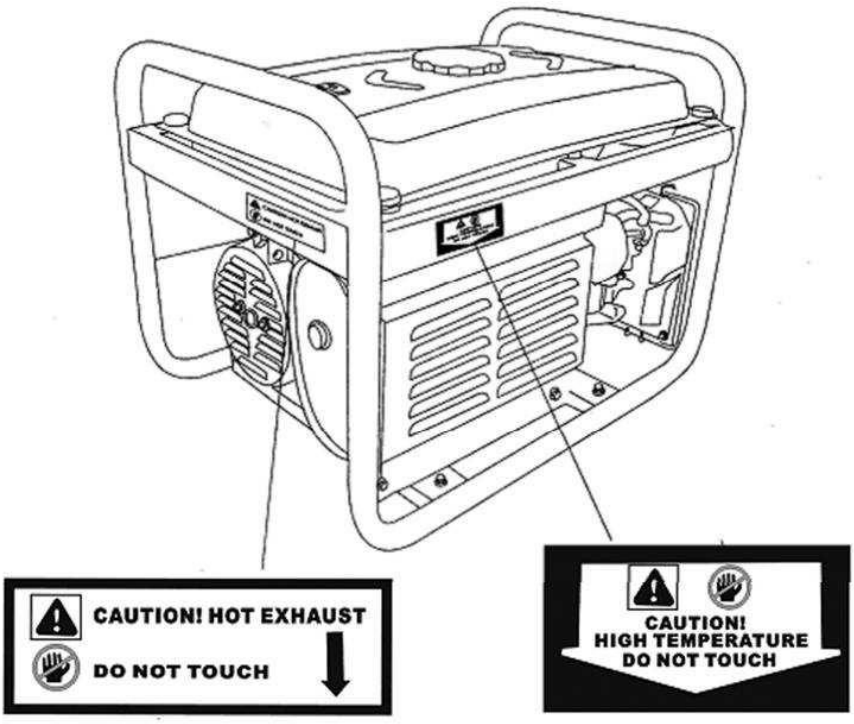

PACKAGE CONTENTS

Your generator comes with the items listed below. Please check to see that all of the following items are included with your generator.

Screw driver

Spanner

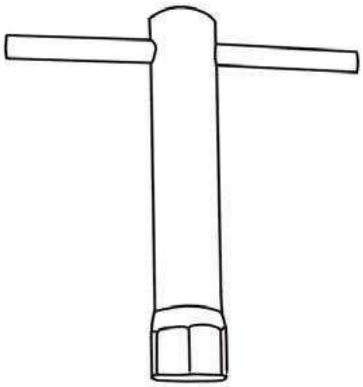

Spark plug wrench

GENERATOR COMPONENTS

Please familiarize yourself with the locations and functions of the various components and controls of your generator.

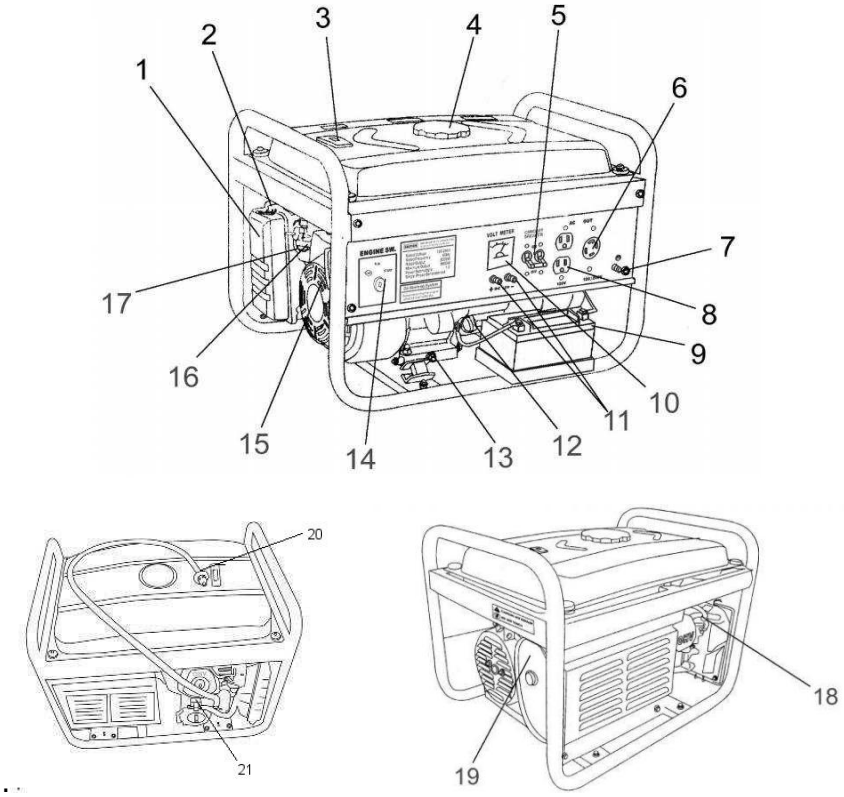

1. **Air Cleaner** - a removable, cleanable, oiled, sponge-like element that cleans the air going into the engine.
2. **Choke Lever** - Allows the airflow into the carburetor to be restricted to assist in starting the engine.
3. **Fuel Gauge** - Indicates the amount of fuel in the gasoline tank.
4. **Fuel Cap** - Allows access to fill the gasoline tank.
5. **Circuit Breaker** - Resettable switch that protects the generator from electrical overload.
6. **120/240v 4-Prong Receptacle** - Use to connect electrical devices that run 120 or 240 Volt, 60Hz, single phase, AC current (NEMA L14-30).
7. **Ground Terminal** - Connect a ground wire here to properly ground the generator.
8. **120v 3-Prong Receptacle** - Use to connect electrical devices that run 120 Volt, 60 Hz, single phase, AC current (NEMA 5-20).
9. **Battery** - 12V DC 7ah Battery that powers the Electric Start System.
10. **Volt Meter** - Provides reading of voltage output.
11. **12v DC Charging Posts** – DC Output for charging batteries or running small DC powered items.
12. **Oil Filler Cap** - Use to add or check the oil.
13. **Oil Fill and Dipstick** - Use to add or check the oil.
14. **Engine Switch** – 3 Position Switch to “Start”, “Run”, or turn “Off” the generator.
15. **Recoil Start** – Easy Pull Recoil Start to start the engine without the electric start.

GENERATOR COMPONENTS (Continued)

16. **Fuel Filter Cup** - Traps dirt and water in gasoline before it enters the engine.
17. **Fuel Valve** - On/Off Valve that allows fuel into the engine.
18. **Spark plug** – Provides ignition to the engine.
19. **Muffler** – Reduces engine emissions and reduces noise.
20. **Propane Tank Connector and Hose** – Connects the LPG tank to the LPG Regulator.
21. **Propane Regulator and Pressure Release Valve** - Provides a regulated LPG Fuel supply to the engine. ***(Intended for use with a LPG Source of 10 PSI or more.)***

PREPARING THE GENERATOR FOR USE

Using the Generator for the First Time

If you are using the generator for the first time, there are a few steps you must take to prepare it for operation.

Step 1 - Add oil

The generator requires engine oil to operate properly. The generator, when new from the package contains no oil in the crankcase. You must add the proper amount of oil before operating the generator for the first time. This amount, which is equal to the oil capacity of the engine crankcase can be found on the chart in figure 1. When filling the engine with oil in the future, please refer to this chart.

Model Number	XP4400EH
Engine Oil Capacity	20 fl. Oz. (0.6L)

Figure 1 – Generator Oil Capacity

• **Do not apply engine oil with additives or 2-stroke gasoline engine oil**. They don't have enough lubrication, and may shorten the engine's service life.
• **Engine oil recommended: SAE 10W-30.** Viscosity varies with regions and temperatures. Choose your oil viscosity using the chart to the right.

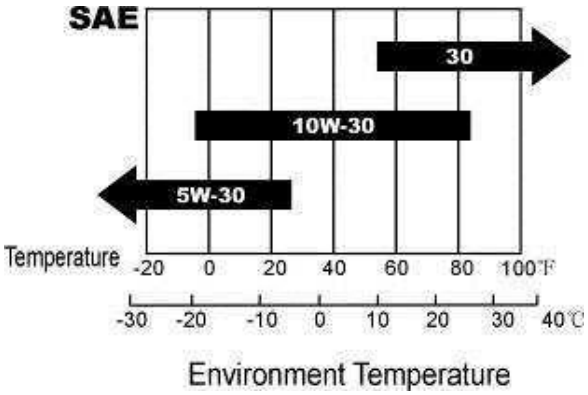

PREPARING THE GENERATOR FOR USE (Continued)

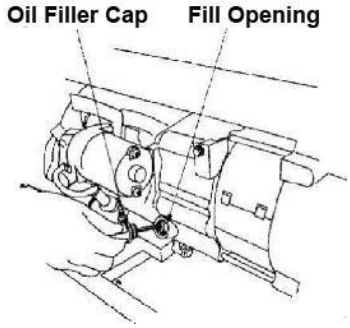

Figure 2 – Unscrewing the Oil Cap

Figure 3 – Adding Oil

To add Oil, follow these steps:

1. Make sure the generator is on a level surface.
2. Unscrew the oil filler/dipstick cap from the engine as shown in figure 2.
3. Using a funnel, add the appropriate amount of oil, as found in figure 1, into the crankcase. You will know the crankcase is full when the oil level has reached the lower lip of the opening you have just poured the oil into. (see figure 3.)
4. Replace oil filler cap.

Step 2 - Add Gasoline

- **WARNING: Gasoline and gas fumes are highly flammable.**
  - **Do not fill tank near an open flame.**
  - **Do not overfill. Always check for fuel spills.**

To ensure that the generator runs smoothly use only FRESH, UNLEADED GAS WITH AN OCTANE RATING OF 87 OR HIGHER.

To add gasoline:

1. Make sure the generator is on a level surface.
2. Unscrew gas cap and set aside (NOTE: the gas cap may be tight and hard to unscrew).
3. Slowly add unleaded gasoline to the fuel tank. Be careful not to overfill. Please refer to the chart in figure 4 to find the gas capacity of your generator model. The fuel gauge on the top of the gas tank indicates how much gasoline is in the generator gas tank.

   NOTE: Gas can expand. Do not fill the gas tank to the very top.
4. Replace fuel cap and wipe up any spilled gasoline with a dry cloth.

PREPARING THE GENERATOR FOR USE (Continued)

IMPORTANT:

- Never use an oil/gasoline mixture.
- Never use old gas.
- Avoid getting dirt or water in the fuel tank.
- Gas can age in the tank and make it hard to start up the generator in the future.
- Never store generator for extended periods of time with fuel in the tank.

Model #	XP4400EH
Gas Tank Capacity	3.96 US Gallons (15L)

Figure 4 - Gas Tank Capacity

Step 3 - Ground the Generator

- **WARNING: Failure to properly ground the generator can result in electrocution.**

Ground the generator by tightening the grounding nut against grounding wire (see figure 5). A generally acceptable grounding wire is a No. 12 AWG (American Wire Gauge) stranded copper wire. This grounding wire should be connected at the other end to a copper or brass-grounding rod that is driven into the earth. Grounding codes can vary by location. Please contact a local electrician to check the grounding regulations for your area.

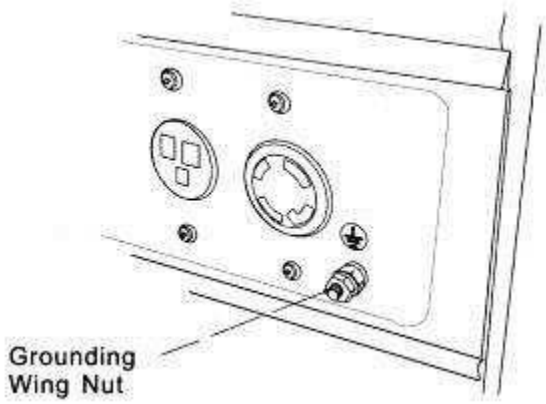

Figure 5 - Attaching the Grounding Wire to the Generator

Subsequent Use of the Generator

If this is not your first time using the generator there are still steps you should take to prepare it for operation.

IMPORTANT: At this point you should be familiar with the procedures described in the first portion of this section entitled "Using the Generator for the First Time." If you have not yet read this section, go back and read it now.

Step 1- Check the oil

The generator is equipped with an automatic shutoff to protect it from damage due to low oil. Nonetheless, you should check the oil level of the engine before each use to ensure that the engine crankcase has a sufficient amount.

To check the oil level:

1. Make sure the generator is on a level surface.
2. Unscrew the oil filler/dipstick cap.
3. With a dry cloth, wipe the oil off of the stick on the inside of the cap.
4. Insert the dipstick as if you were replacing the cap and then remove again. There should now be oil on the stick. If there is no oil on the stick, or oil only at the very end of the stick, you should add oil until the engine crankcase is filled (see "Adding Oil" portion of the "Maintenance" section).
5. Be sure to replace the cap when finished checking oil.

NOTE: The oil capacity for your generator can be found in the "Specifications" section of this manual.

Step 2 - Check the Gas Level

Before starting the generator, check to see that there is sufficient gasoline in the gas tank. The fuel gauge on top of the generator will indicate the gas level in the tank. Add gas if necessary according to the steps in the “Adding Gasoline" portion of the "Maintenance" section.

- WARNING: Gasoline and gasoline fumes are highly flammable.
    - Do not fill tank near an open flame.
    - Always allow engine to cool for several minutes before refueling.
    - Do not overfill (check the "Specifications" section for the tank capacity of your generator).
    - Always check for fuel spills.

Starting the Generator: Gasoline

⚠ CAUTION:

LPG must be shut off when using gasoline!

Gasoline must be shut off when using LPG!

Disconnect all electrical loads from the generator before attempting to start!

1. Make sure that the AC circuit breaker is in the OFF position. The generator may be hard to start if a load is connected.
2. Turn the fuel valve lever to the ON position.
3. The choke will need to be closed, slide the choke lever out to the CLOSED position.
4. Turn the engine switch to the START position and hold it there for 5 seconds or until the engine starts.

WARNING:

- Operating the starter motor for more than 5 seconds can damage the motor. If the engine fails to start, release the switch and wait 10 seconds before operating the starter again.
- If the speed of the starter motor drops after a period of time, it is an indication that the battery should be recharged.

5. When the engine starts, allow the engine switch to return to the ON position.
6. Push the choke to the OPEN position as the engine warms up.

Stopping the Engine

In an emergency:

⚠ To stop the engine in an emergency, move the engine switch to the OFF position.

In normal use:

1. Turn the AC circuit breaker to the OFF position. Disconnect any DC Load attached to the DC Output on the front panel.
2. Turn the engine switch to the OFF position.
3. Turn the fuel valve lever to the OFF position.

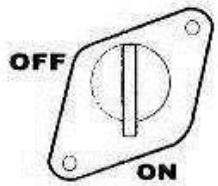

Figure 6 - fuel valve in the "on" position

Figure 7 - Choke in the close position

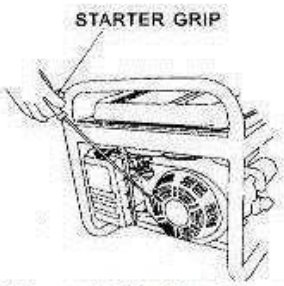

Figure 8 - Pulling the recoil start.

Starting the Generator: Propane

⚠ CAUTION:

LPG must be shut off when using gasoline!

Gasoline must be shut off when using LPG!

Disconnect all electrical loads from the generator before attempting to start!

1. Make sure that the AC circuit breaker is in the OFF position. The generator may be hard to start if a load is connected.
2. Turn the gasoline fuel valve to the "OFF" position.
3. Connect the propane gas hose to the regulator/decompression valve.
4. Connect the propane collar to the gas supply and then turn on the propane gas supply.
5. Press the button on top of the pressure release valve down two or three times.
6. The choke operates differently on propane gas.
    a. If the engine is warm (the unit was run recently) start with the choke half open.
        i. Wait 30 seconds and then push the choke lever all the way to the "OPEN" position.
    b. If the engine is cold (the unit was not run recently) start with the choke "OPEN".
7. Turn the engine key switch to the START position and hold it there for 5 seconds, or until the engine starts.

WARNING:

- Operating the starter motor for more than 5 seconds can damage the motor. If the engine fails to start, release the switch and wait 10 seconds before operating the starter again.
- If the speed of the starter motor drops after a period of time, it is an indication that the battery should be recharged.

8. When the engine starts, allow the engine switch to return to the ON position.

Stopping the Engine

In an emergency:

⚠ To stop the engine in an emergency, move the engine switch to the OFF position.

In normal use:

1. Turn the AC circuit breaker to the OFF position. Disconnect DC battery charging cables.
2. Turn the engine switch to the OFF position.
3. Turn OFF the Propane Gas Supply.

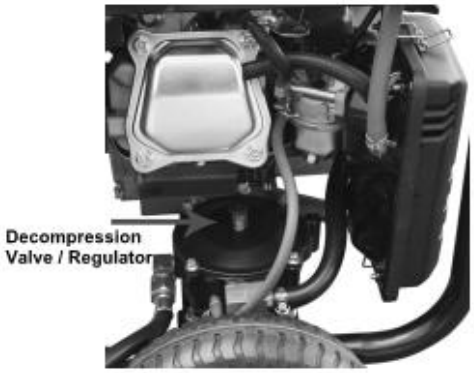

Starting the Generator: Propane (Continued)

⚠ WARNING: WHEN USING THE GENERATOR WITH LPG
MAKE SURE THERE IS NO POSSIBLE IGNITION SOURCE CLOSE TO THE GENERATOR.

1. Before using, make sure all of the LPG connectors and hoses are well connected and sealed.
2. Connect electrical devices to generator ONLY after the engine runs smoothly. (There may be remnant gasoline in the carburetor; this can cause unsteady engine performance for several minutes)
3. If the propane gas leaks, shut off the LPG supply first and then quickly unplug or turn off any electrical devices powered by the unit.
4. When stopping the engine, unplug or turn off any electrical devices, turn off the Main Circuit Breaker and then turn off the LPG Supply. After the engine has stopped turn the KEY to 'OFF" position.

Using the Generator

Once you have allowed the engine to run for several minutes, you may connect electrical devices to the generator.

AC Usage

- You may connect electrical devices running on AC current according to their wattage requirements.
- The chart in figure 9 shows the rated and surge wattage of your generator according to its model number.
- The *rated wattage* corresponds to the maximum wattage the generator can output on a continuous basis.
- The *surge wattage* corresponds to the maximum amount of power the generator can output for a short period of time. Many electrical devices such as refrigerators require short bursts of extra power, in addition the rated wattage listed by the device, to stop and start their motors. The surge wattage ability of the generator covers this extra power requirement.

Model Number	Rated (Running) Wattage	Surge (Peak) Wattage
XP4400EH	3500	4400

Figure 9 - Generator Wattage by Model Number

The total running wattage requirement of the electrical devices connected to the generator should not exceed the rated wattage of the generator itself. To calculate the total wattage requirement of the electrical devices you wish to connect, find the rated (or running) wattage of each device. This number should be listed somewhere on the device or in its instruction manual.

If you cannot find this wattage, you may calculate it by multiplying the Voltage requirement by the Amperage drawn: Watts = Volts x Amps. If these specifications are not available you may *estimate* the Watts required by your device by using the chart in figure 10.

Using the Generator (Continued)

Tool or Appliance	Rated (Running) Watts	Additional Surge Watts
Electric water heater (40 gal)	4000	0
Hot plate	2500	0
Saw-radial arm	2000	2000
Electric stove	1500	0
Saw-circular	1500	1500
Air compressor (1HP)	1500	3000
Window air conditioner	1200	1800
Saw-miter	1200	1800
Microwave	1000	2000
Well water pump	1000	1500
Reciprocating saw	960	1040
Sump pump	800	1200
Refrigerator freezer	800	1200
Furnace blower	800	1300
Computer	800	0
Electric drill	600	900
Television	500	0
Deep freezer	500	800
Garage door opener	480	600
Stereo	400	0
Box fan	300	600
Clock radio	300	0
Security system	180	0
DVD player/VCD	100	0
Common light bulb	75	0

Figure 10- Estimated wattage requirements of common electrical devices.

Once you have found the rated wattage requirement of each electrical device, add these numbers to find the total rated wattage you wish to draw from the generator. If this number exceeds the rated wattage of the generator, DO NOT connect all these devices. Select a combination of electrical devices, which has a total rated wattage lower than or equal to the rated wattage of the generator.

⚠ **CAUTION - The generator can only run at its surge wattage capacity for a very short time. Connect only electrical devices requiring a rated (running) wattage equal to or less than the rated wattage of the generator. Never connect devices requiring a rated wattage equal to the surge wattage of the generator.**

NOTE: The above wattage figures are estimates only. Try to check the wattage listed on your electrical devices before consulting this chart.

Connecting a Load to the Generator

NOTE: Be sure to attach devices to the correct receptacle (outlet).

- 120v devices can be directly connected to the 120v ONLY receptacles.
- 120v devices can be connected to the 120/240v receptacle using an appropriate adapter.
- 240v devices can ONLY be connected the 240v receptacle.

1. Plug in each electrical device with the device turned off.
2. Switch the circuit breaker to the "ON" position.
3. Turn on the connected electrical devices in the order of the amount of power they require beginning with the device with the highest rated Wattage requirement.

⚠ **CAUTION: Do not connect 50Hz or 3-phase loads to the generator.**

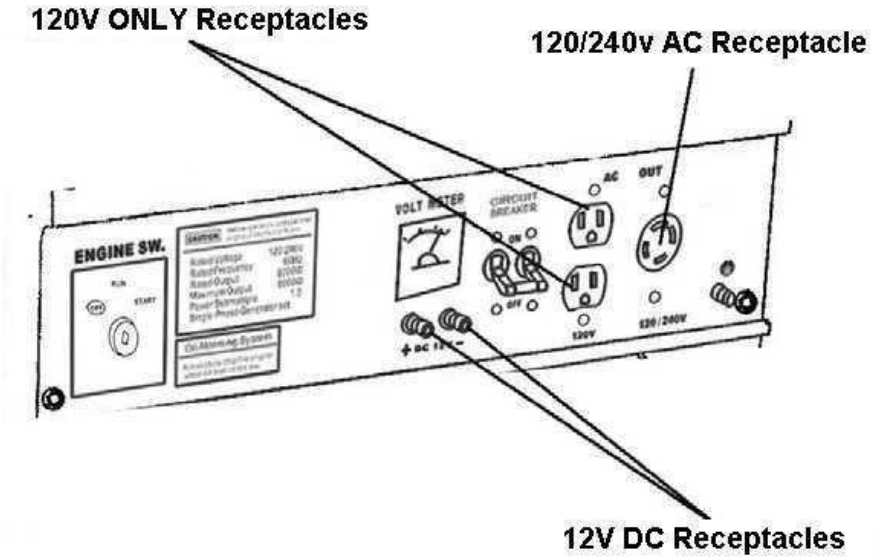

VOLTAGE SELECTOR SWITCH

The voltage selector switches the dual 120v AC windings of the generator to produce "120V ONLY" or "120/240V". If a 240V appliance is connected to the 4-prong receptacle, the switch must be in the "120/240V" position. If only 120V appliances are being connected to the generator select the "120V ONLY" position to double the 120v amperage.

WARNING:

Only change the Voltage Selector Switch with the main AC Circuit Breaker OFF. The generator can be seriously damaged if the Voltage Selector Switch is changed with the breaker ON.

Choosing the Right Power Cord

Long or thin cords can drain the power provided to an electrical device by the generator. When using such cords, allow for a slightly higher rated wattage requirement for the electrical device. See Figure 12 for recommended cords based on the power requirement of the electrical device.

DEVICE REQUIREMENTS		WIRE GAUGE BY LENGTH (ft.)				
AMPS	**WATTS (120V/240V)**	**10**	**25**	**50**	**100**	**150**
5	**600/1200**	18	16	14	12	10
10	**1200/2400**	16	14	12	10	8
15	**1800/3600**	14	12	10	8	6
20	**2400/4800**	12	10	8	6	4
25	**3000/6000**	10	8	6	4	4
30	**3600/7200**	8	6	4	4	NR
40	**4800/9600**	6	4	4	NR	NR
50	**6000/1200**	4	4	2	NR	NR
*NR = NOT RECOMMENDED						

Figure 12 – Minimum Extension Cord Requirements

DC Usage

⚠ **CAUTION: The DC receptacle is for recharging 12 Volt automotive-type batteries only. Do not connect any other device to this receptacle.**
⚠ **CAUTION: Never try to jump start a car with your generator.**

To connect a 12V battery to the DC battery charger on the front panel:

1. Connect one charging wire to the positive terminal on the battery and the other charging wire to the negative terminal on the battery.
2. Connect the free end of the positive wire to the positive receptacle (outlet) on the generator.
3. Start the generator.
4. Carefully connect the free end of the negative wire to the negative receptacle on the generator.
5. When disconnecting, always disconnect the wires from the generator first to avoid a spark.

⚠ **DANGER: Stored batteries emit highly explosive hydrogen gas when charged. Batteries also contain acid, which can cause severe chemical burns.**
⚠ **Do not allow open flames or cigarettes nearby for several minutes after charging a battery.**
⚠ **Always wear protective goggles and rubber gloves when charging a battery.**
⚠ **If battery acid gets on your skin, flush with water.**
⚠ **If battery acid gets in your eyes, flush with water and call a physician immediately.**
⚠ **If battery acid is swallowed, drink large quantities of milk and call a Physician immediately.**

If your generator is the electric start model, once running, it will charge the battery on the generator automatically. While charging, you can see the recharge indicator light lit, after the battery is full, the light will turn off.

MAINTENANCE AND CARE

The Importance of Maintenance

Proper routine maintenance of your generator is essential for safe, economical, and trouble-free operation. It will also help reduce air pollution.

Warning

Improper maintenance, or failure to correct a problem before operation, can cause a malfunction in which you can be seriously injured or killed. Always follow the inspection and maintenance recommendations and schedules in this instruction manual.

⚠ Maintenance Safety

- **Make sure the engine is off before you begin any maintenance or repairs.**
- **Let the engine and exhaust system cool before touching.**
- **To reduce the possibility of fire or explosion, be careful when working around gasoline. Use only a nonflammable solvent, not gasoline, to clean parts. Keep cigarettes, sparks, and flames away from all fuel related parts.**

Maintenance Schedule

Remember that this schedule is based on the assumption that your machine will be used for its designed purpose. Sustained high-load, high temperature operation, or use in unusually wet or dusty conditions, will require more frequent service.

SERVICE		REGULAR SERVICE PERIOD				
		BEFORE EACH USE	1 MO. OR 20 HRS.	3 MO. OR 50 HRS.	6 MO. OR 100 HRS.	12 MO. OR 300 HRS.
ENGINE OIL	CHECK	■				
	CHANGE		■			
AIR CLEANER	CHECK	■				
	CHANGE			■		
SEDIMENT CUP	CLEAN				■	
SPARK PLUG	CLEAN - ADJUST				■	
	REPLACE					■
SPARK ARRESTER	CLEAN				■	
IDLE SPEED	CHECK-ADJUST					■
VALVE CLEARANCE	CHECK-ADJUST					■
COMBUSTION CHAMBER	CLEAN	500 HRS.				
FUEL TANK AND FILTER	CLEAN				■	
FUEL TUBE	CHECK	EVERY 24 MO. (REPLACE IF NECESSARY)				
TO BE PERFORMED AT MONTH INDICATED OR HOUR INTERVAL WHICH EVER COMES FIRST						

Figure 13 – Maintenance Schedule.

Checking the Oil

The generator is equipped with an automatic shutoff to protect it from running on low oil. Nonetheless, you should check the oil level of the generator before each use to ensure that the generator crankcase has a sufficient amount.

To check the oil level:

1. Make sure the generator is on a level surface.
2. Unscrew the oil filler/dipstick cap (see figure 14).
3. With a dry cloth, wipe the oil off of the stick on the inside of the cap.
4. Insert the dipstick as if you were replacing the cap and then remove again. There should now be oil on the stick. If there is no oil on the stick, or oil only at the very end of the stick you should add oil until the engine crankcase is filled. See "Changing/Adding Oil" in this section.
5. Be sure to replace cap when you are finished checking the oil.

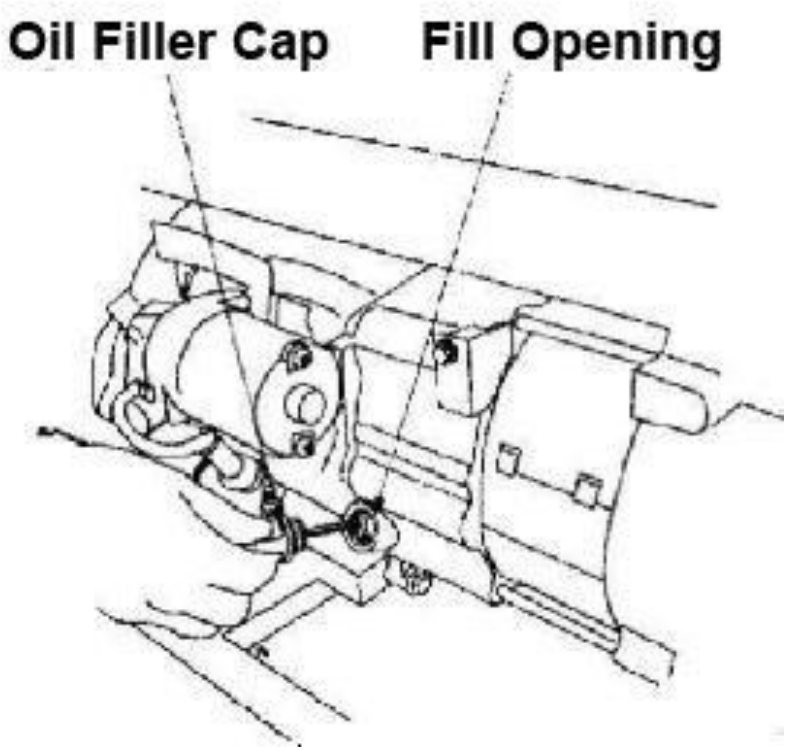

You should check the oil level of your generator according to the maintenance schedule in figure 13. When the oil level is low you will need to add oil until the level is sufficient to run the generator. The oil capacity of your generator engine is listed in figure 15.

Model Number	XP4400EH
Engine Oil Capacity	20 fl. Oz.

Figure 15 – Generator Oil Capacity

Changing the Oil

It is only necessary to drain the oil from the crankcase, other than for regular oil changes, if it has become contaminated with water or dirt. In this case, you can drain the oil from the generator according to the following steps:

1. Place an approved oil disposal container underneath the generator to catch the oil as it drains.
2. Using a 10 mm hex wrench, unscrew the oil drain plug, which is located on the crankcase underneath the oil filler/dipstick cap (see figure 16). Allow all the oil to drain from the generator.
3. Replace the oil drain plug and tighten with a 10 mm hex wrench.

To add oil to the crankcase, follow these steps:

1. Make sure the generator is on a level surface.
2. Unscrew the oil filler/dipstick cap from the engine as shown in figure 14 above.
3. Using a funnel, add motor oil to the crankcase. We recommend SAE 10W30 motor oil for general use. When full, the oil level should come close in the top of the oil fill opening. (See figure 17).

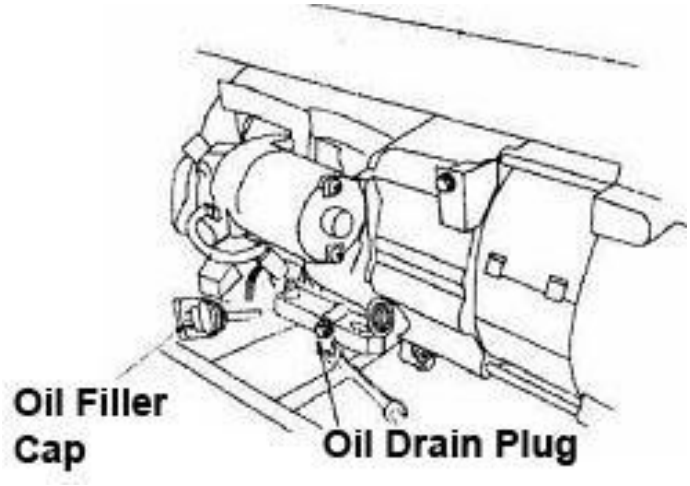

Figure 16: Draining the Oil

Figure 17: Adding Oil

Air Cleaner Maintenance

Routine maintenance of the air cleaner helps maintain proper airflow to the carburetor. Occasionally check that the air cleaner is free of excessive dirt.

1. Unhinge the clasps at the top and bottom of the air cleaner cover (see figure 18).
2. Remove the sponge-like elements from the casing.
3. Wipe the dirt from inside the empty air cleaner casing.
4. Wash the sponge-like elements in household dish detergent and warm water.
5. Allow the elements to dry completely.
6. Soak the dry elements in a small amount of engine oil. Ring out any excess oil.
7. Replace the sponge-like elements in the air cleaner casing and replace the cover.

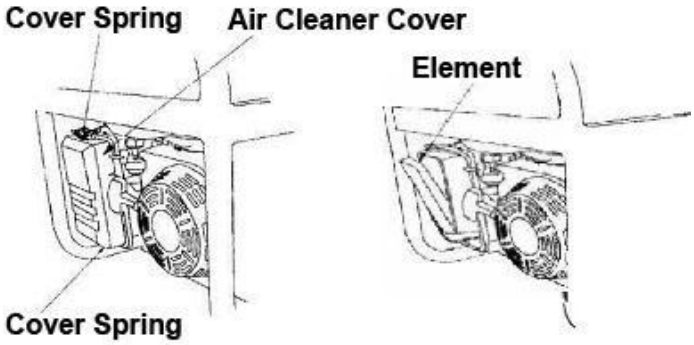

Figure 18 - Removing the Air Cleaner Casing.

Fuel Filter Cup Cleaning

The fuel filter cup is a small well underneath the fuel valve. It helps to trap dirt and water that may be in your fuel tank before it can enter the engine.

To clean the fuel filter cup:

1. Turn the fuel valve to the “OFF” position.
2. Unscrew the fuel filter cup from the fuel valve using a wrench. Turn the valve towards you to unscrew (see figure 19).
3. Clean the cup of all sediment using a rag or brush.
4. Reinstall the fuel filter cup.

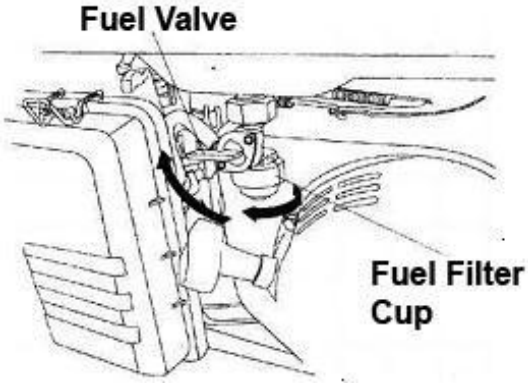

Figure 19 – Removing the Fuel Filter Cup

Spark Plug Maintenance

The spark plug is important for proper engine operation. A good spark plug should be intact, free of deposits, and properly gapped.

To inspect your spark plug:

1. Pull on the spark plug cap to remove it.
2. Unscrew the spark plug from the generator using the spark plug wrench included with this product (see figure 20).
3. Visually inspect the spark plug. If it is cracked or chipped, discard and replace with a new spark plug. We recommend using a F6RTC spark plug such as NGK BPR5ES.
4. Measure the plug gap with a gauge (see figure 21). The gap should be 0.7-0.8 mm (0.028-0.031 in).
5. If you are re-using the spark plug, use a wire brush to clean any dirt from around the spark plug base and then re-gap the spark plug.
6. Screw the spark plug back into its place on the generator using the spark plug wrench.
7. Replace the spark plug cap.

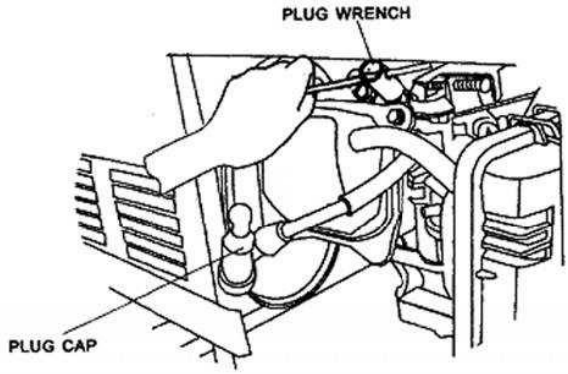

Figure 20- Removing the spark plug

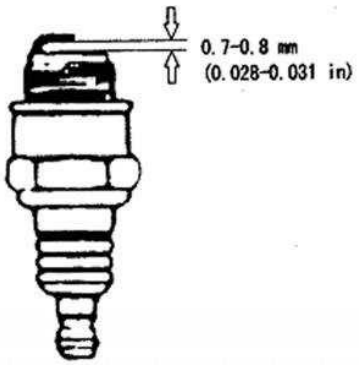

Figure 21- Measuring the spark plug gap

Emptying the Gas Tank

Before storing your generator for extended periods of time, you should drain your generator of gasoline.

To drain the generator of gas:

1. Turn the fuel valve to the "OFF" position.
2. Remove the fuel filter cup (see "Removing the Fuel Filter Cup" earlier in this section.
3. Empty the fuel filter cup of any fuel.
4. With a receptacle underneath the generator to catch the gas, turn the fuel valve to the "ON" position. Drain all the gas from the generator.
5. Turn the fuel valve to the "OFF" position.
6. Replace the fuel filter cup.
7. Store the emptied gasoline in a suitable place.

⚠ **CAUTION: Do not store fuel from one season to another.**

Storage and Transportation

⚠ **CAUTION: Never place any type of storage cover on the generator while it is still hot.**

When transporting your generator:

- Empty the gas tank (see "Emptying the Gas Tank" in the "Maintenance" section).
- Disconnect the spark plug.
- Do not obstruct any ventilation openings.
- Keep the generator in a cool dry area.

When storing your generator:

If you plan on starting the unit again the same day:

1. Turn off the main breaker.
2. Allow the unit to run 3 - 5 minutes.
3. Turn off the key.
4. Store.

If you plan on starting the unit again within 30 days:

1. Turn off the main breaker.
2. Allow the unit to run 3 - 5 minutes.
3. Turn off the fuel valve.
4. Allow the unit to stall out.
5. Turn off the key.
6. Add fuel stabilizer to the gas remaining in the tank.
7. Store.

If you do not plan to start the unit for longer than 30 days:

1. Turn off the main breaker.
2. Allow the unit to run 3 - 5 minutes.
3. Turn off the fuel valve.
4. Allow the unit to stall out.
5. Turn off the key.
6. Drain the fuel tank (See "Emptying the Gas Tank" in the "Maintenance" section)
7. Drain the carburetor
    a. Remove the drain bolt from the carburetor.
    b. Drain the small amount of remaining fuel from the carburetor bowl.
8. Oil the cylinder
    a. Remove the spark plug.
    b. Put 2 tbsp. of 10w30 motor oil directly into the spark plug hole
    c. Pull the recoil start one time.
    d. Replace the plug.
9. Remove the battery and place on tender indoors.

Generator Specifications		
AC Rated Wattage	3500W	
AC Surge Wattage	4400W	
AC Rated Voltage	120/240V	
AC Rated Frequency	60 Hz	
AC Phase	Single	
DC Voltage	12V	
DC Amperage	8.3A	
Dimensions (in.)	Length	23.2
	Width	17
	Height	17
Engine Type	4-Stroke OHV Forced-Air	
Ignition System	Non-Contact Transistor	
Displacement	210cc	
Starting Type	Electric	
Fuel Tank Capacity	3.96 US Gal. (15L)	
Oil Capacity	20 fl. oz. (0.6L)	
Run Time @ 50% (Gasoline)	12 hr.	
Run Time @ 50% (Propane)	16 hr. (5 Gallon)	
Noise Level	<69db	

Troubleshooting		
Problem	**Cause**	**Solution**
Engine will not start	Engine Switch is "Off"	Set Engine Switch to "Run"
	Fuel Valve is "Closed"	Turn Fuel Valve to "Open"
	Choke is open.	Close the Choke
	Engine is out of fuel.	Add Fuel
	Fuel is old or contaminated.	Change Fuel
	Spark Plug is dirty.	Clean Spark Plug
	Spark Plug is broken.	Replace Spark Plug
	Generator is not level.	Move generator to a level surface
	Oil is low.	Add/Change oil
Engine runs, but there is no electrical output.	Circuit Breaker is "Off"	Turn "On" Circuit Breaker
	Wiring connection is bad.	Replace Extension Cord(s)
	Device connected to generator is Malfunctioning.	Disconnect Malfunctioning Device
Generator runs, but does not support all electrical devices connected.	Generator is overloaded.	Disconnect 1 or more items to reduce the load
	Device connected to generator is bad.	Disconnect Malfunctioning Device
	Air Cleaner is Dirty.	Clean/Replace the Air Filter

Wheel Kit Assembly

The generator includes a wheel kit for easy transportation.

To install the wheel kit:

1. Please the generator on a flat, even surface. Temporarily place blocks under the generator to easy assembly.
   NOTE: DO NOT flip the generator upside down to install the wheel kit.
2. Secure the support legs to the frame with provided bolts and lock nuts. (See figure 22)
3. Secure the axle bracket welded to axle the frame with the provided bolts and lock nuts. (See figure 23)
4. Secure the loose axle bracket to the frame with the provided bolts and lock nuts. (See figure 24)
5. Slide one wheel over each axle end and secure with the provided retaining pins. (See Figures 25)
6. Attach the handles to the brackets on the frame using the provided bolts and nuts. (See Figures 26 and 27)
7. Check that all fasteners are tight.

Figure 22

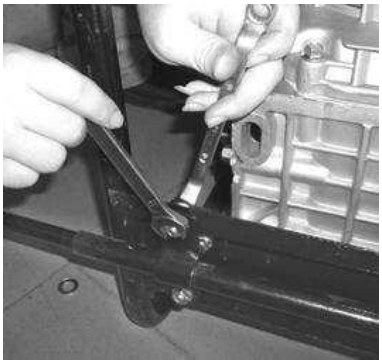
Figure 23

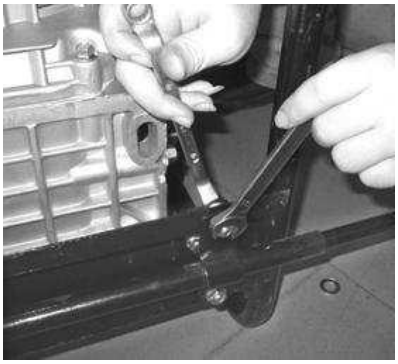
Figure 24

Figure 25

Figure 26

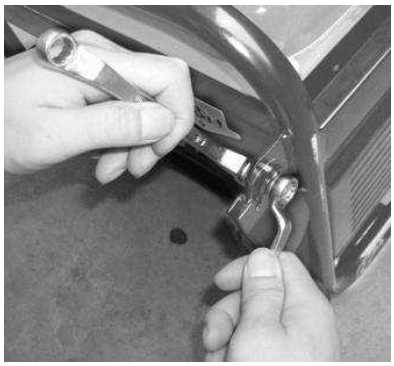
Figure 27

Changing/Inspecting the Carbon Brushes

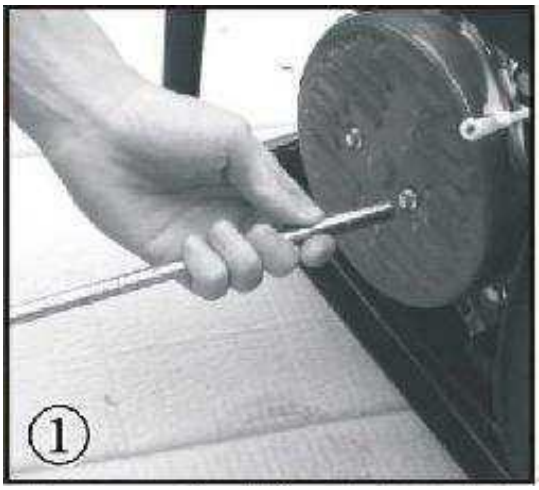

Remove the 2 bolts on the generator cover.

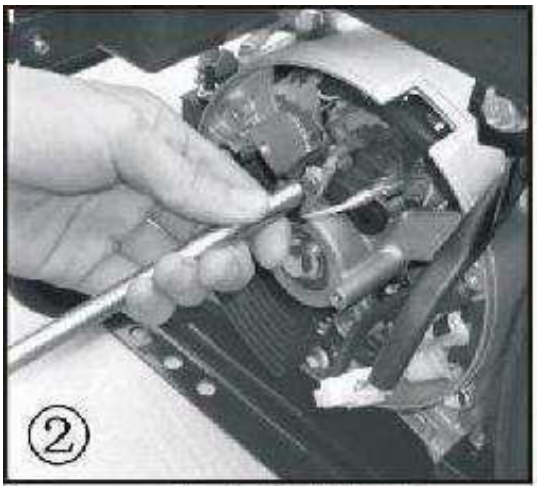

Remove the bolt holding the carbon brush.

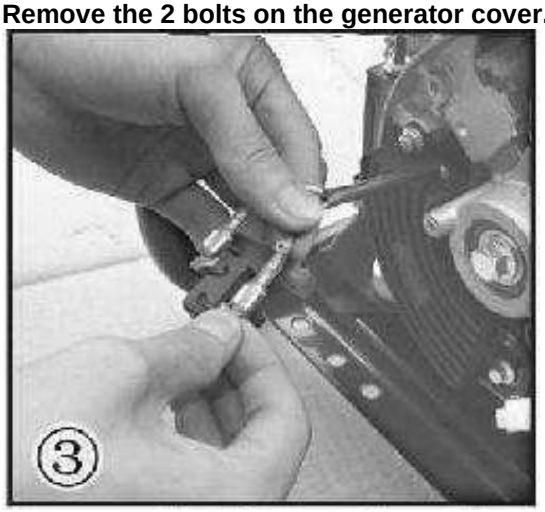

Remove the 2 wires from the AVR on the carbon brush.

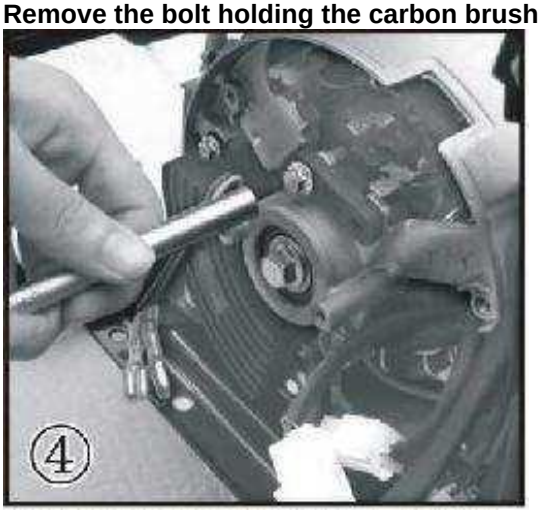

Install a new carbon brush with bolt.

Insert and connect the 2 wires from the AVR, be sure to connect + and – correctly.

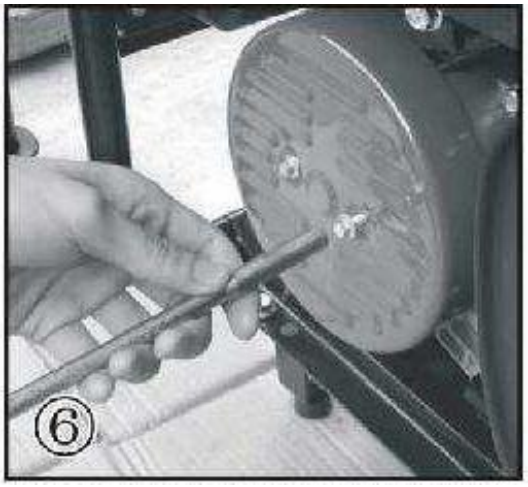

Replace the back cover of the generator and secure with the 2 bolts.

Changing/Inspecting the AVR

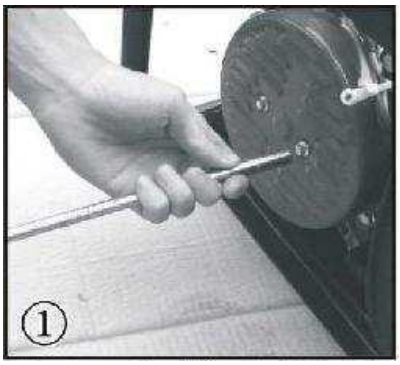

Remove the 2 bolts on the generator cover.

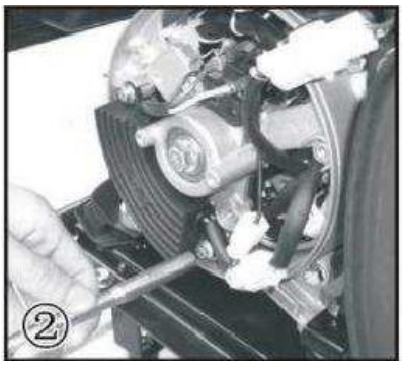

Remove the 2 bolts holding the AVR.

Disconnect the wire clip.

Remove the 2 wires from the AVR on the carbon brush.

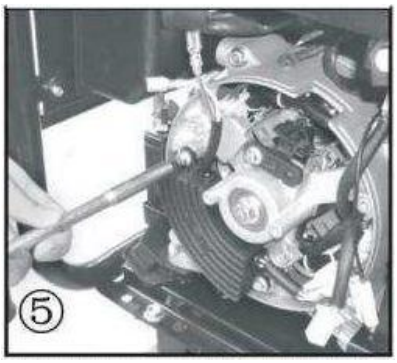

Install the new AVR with the 2 bolts.

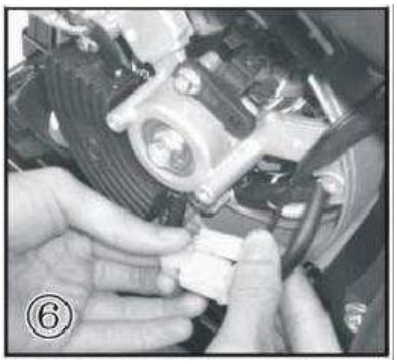

Reconnect the wire clip.

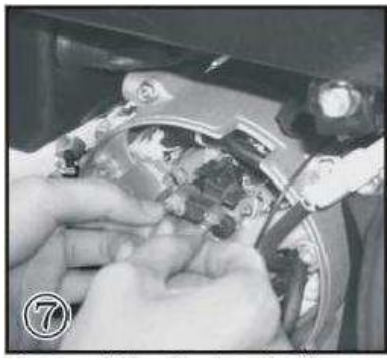

Insert and connect the 2 wires from the AVR, be sure to connect + and – correctly

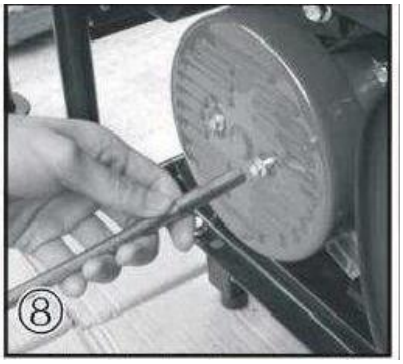

Replace the back cover of the generator and secure with the 2 bolts.

Maintenance Log

MODEL: XP4400EH		
Date	Generator Hrs.	Maintenance Performed

Wiring Diagram

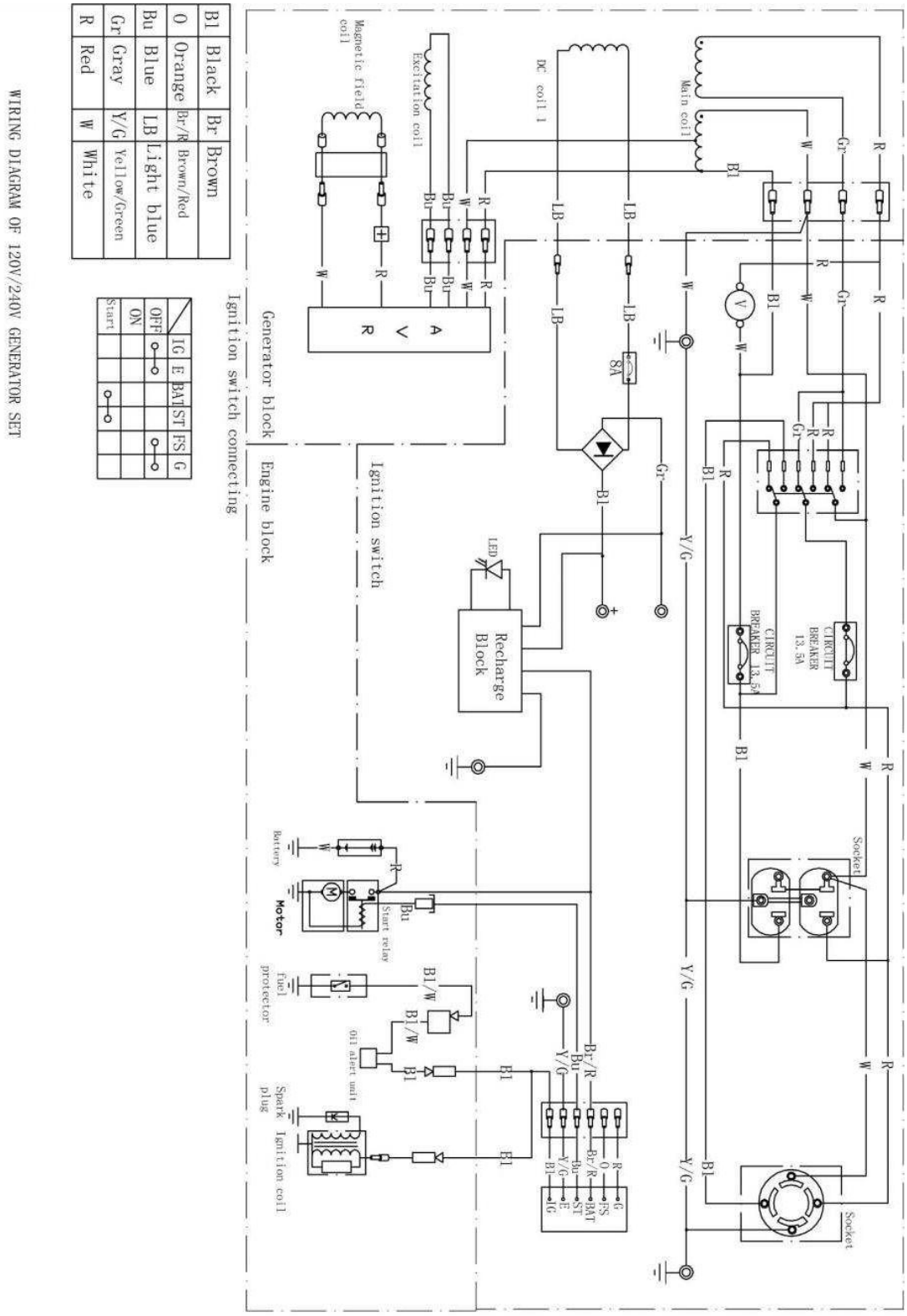

WIRING DIAGRAM OF 120V/240V GENERATOR SET

Engine Parts

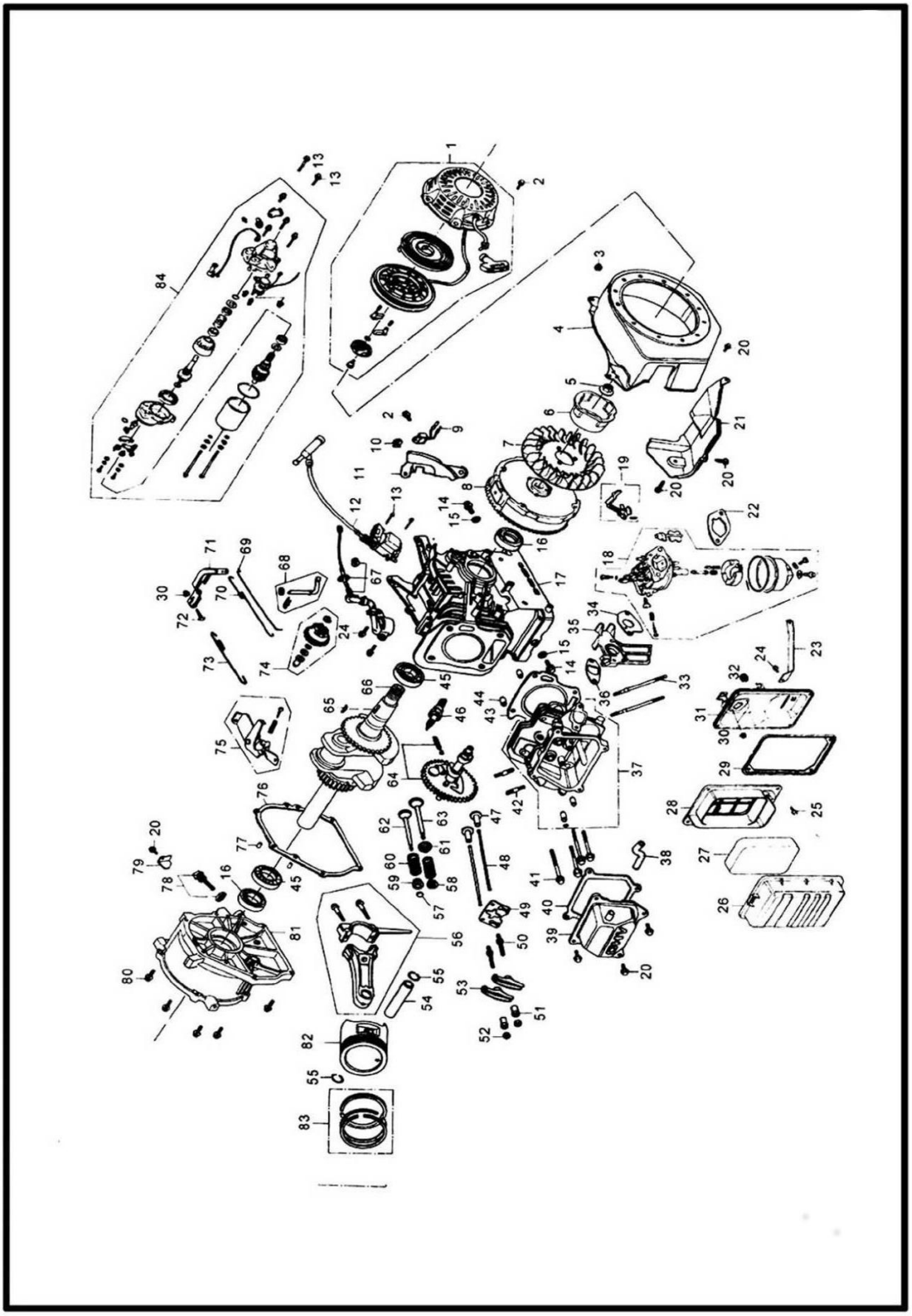

Engine Parts

Part #	Description	Qty	Item #	Cross-Reference
1	Recoil Starter (Complete)	1	XP4400EH-1	DJ168F-16121-K
2	Flange Bolt (M6x8)	4	XP4400EH-2	GBT5787-B6-8
3	Grommet, Drain Hole	1	XP4400EH-3	DJ168F-16118
4	Flywheel Fan Cover (Comp)	1	XP4400EH-4	DJ170N-16121-A
5	Flange Nut (M14)	1	XP4400EH-5	GBT6177/10-N-14
6	Starter Pulley	1	XP4400EH-6	DJ168F-16000-A
7	Flywheel Fan Cover (Comp)	1	XP4400EH-7	DJ168F-16002-A
8	Flywheel	1	XP4400EH-8	DJ168F-16200-I
9	Low Oil Switch	1	XP4400EH-9	DJ168F-18300-A
10	Low Oil Switch Clip	1	XP4400EH-10	XP4400EH-10
11	Side Plate	1	XP4400EH-11	DJ170S-11400-A
12	Ignition Coil Assy	1	XP4400EH-12	DJ168F-18100-C
13	Flange Bolt (M6x25)	2	XP4400EH-13	GBT5787-B6-25
14	Drain Lug Bolt	2	XP4400EH-14	DJ168F-11004-A
15	Drain Lug Washer	2	XP4400EH-15	DJ168F-11005-A
16	Oil Seal (25x41x6)	2	XP4400EH-16	DJ168F-11014-A
17	Crankcase Assy	1	XP4400EH-17	DJ170F-11100-C
18	LPG/Gasoline Carburetor Assy	1	XP4400EH-18	DJ170FD-14100-C
19	Carburetor Choke Lever	1	XP4400EH-19	DJ168F-14119
20	Flange Bolt (M6x12)	11	XP4400EH-20	GBT5787-B6-16
21	Shroud Complete	1	XP4400EH-21	DJ168F-11012-A
22	Gasket, Carb to Air	1	XP4400EH-22	DJ168F-14027-A
23	Air Cleaner Bracket	1	XP4400EH-23	DF2500H-14205-A
24	Flange Bolt (M6x12)	3	XP4400EH-24	GBT5787-B6-12
25	Bolt (M5x12)	4	XP4400EH-25	GBT5787-B5-14
26	Air Cleaner Cover	1	XP4400EH-26	DJ168F-14204
27	Air Cleaner Element	1	XP4400EH-27	DJ170F-14201
28	Air Cleaner Element Holder	1	XP4400EH-28	DJ168F-14202
29	Air Cleaner Seal	1	XP4400EH-29	DJ168F-14206
30	Flange Nut (M6)	2	XP4400EH-30	GBT6177-N-6
31	Air Cleaner Case (Comp)	1	XP4400EH-31	DJ168F-14205-A
32	Grommet, Fender	1	XP4400EH-32	DJ168F-14014-A
33	Guide Bolt (M6x94)	2	XP4400EH-33	DJ168FD-14001-A
34	Carburetor Gasket	1	XP4400EH-34	DJ168F-14005-A
35	Carburetor Heat Isolator	1	XP4400EH-35	DJ168F-14004-A
36	Carburetor Heat Isolator Gasket	1	XP4400EH-36	DJ168F-14003-B
37	Cylinder Head (Comp)	1	XP4400EH-37	DJ170F-11200-B
38	Cylinder Head Breather	1	XP4400EH-38	DJ168FD-11013-A
39	Cylinder Head Cover (Comp)	1	XP4400EH-39	DJ168F-11300-C
40	Cylinder Head Cover Gasket	1	XP4400EH-40	DJ168F-11011-A
41	Flange Bolt (M8x60)	4	XP4400EH-41	GBT5787-B8-60
42	Guide Bolt (M8x32)	2	XP4400EH-42	DJ168F-14002-A

Part #	Description	Qty	Item #	Cross-Reference
43	Cylinder Head Gasket	1	XP4400EH-43	DJ170F-11010-C
44	Cylinder Head Bolt Guide	2	XP4400EH-44	DJ168F-11009-A
45	Radial Ball Bearing (6025)	2	XP4400EH-45	GB276-89-6205
46	Spark Plug	1	XP4400EH-46	DJ168F-18500-A
47	Valve Tappet	2	XP4400EH-47	DJ170F-13009-A
48	Push Rod	2	XP4400EH-48	DJ170F-13008-A
49	Push Rod Guide Plate	1	XP4400EH-49	DJ168F-13300-A
50	Rocker Arm Pivot Bolt	2	XP4400EH-50	DJ168F-13202-A
51	Rocker Arm Nut	2	XP4400EH-51	DJ168F-13203-A
52	Rocker Arm Pivot Bolt Nut	2	XP4400EH-52	DJ168F-13204-A
53	Rocker Arm	2	XP4400EH-53	DJ168F-13201-A
54	Piston Pin	1	XP4400EH-54	DJ170F-12002-A
55	Piston Pin Clip	2	XP4400EH-55	DJ168F-12003-A
56	Connecting Rod	1	XP4400EH-56	DJ170F-12200-B
57	Valve Cap	1	XP4400EH-57	DJ168F-13006-A
58	Intake Valve Spring Retainer	1	XP4400EH-58	DJ168F-13004-A
59	Exhaust Valve Spring Retainer	1	XP4400EH-59	DJ168F-13005-A
60	Valve Spring	2	XP4400EH-60	DJ168F-13003-A
61	Valve Spring Seat	1	XP4400EH-61	DJ168F-13010-A
62	Exhaust Valve	1	XP4400EH-62	DJ168F-13001-A
63	Intake Valve	1	XP4400EH-63	DJ168F-13002-A
64	Camshaft	1	XP4400EH-64	DJ168F-13100-B
65	Crankshaft Key (25x18)	1	XP4400EH-65	DJ168F-12104
66	Crankshaft	1	XP4400EH-66	DJ168F-12100-BB
67	Low Oil Sensor	1	XP4400EH-67	DJ168F-18200-A
68	Governor Shaft	1	XP4400EH-68	DJ168F-15001-A
69	Governor Arm Rod	1	XP4400EH-69	DJ168F-15006-A
70	Throttle Return Spring	1	XP4400EH-70	DJ170F-15008-A
71	Governor Arm	1	XP4400EH-71	DJ168F-15004-A
72	Governor Arm Bolt	1	XP4400EH-72	DJ168F-15005-A
73	Governor Spring	1	XP4400EH-73	DJ170F-15007-A
74	Governor Assembly (Comp)	1	XP4400EH-74	DJ168F-15100-A
75	Throttle Stop Assy	1	XP4400EH-75	DJ168FD-15200-A
76	Crankcase Cover Gasket	1	XP4400EH-76	DJ170F-11003-B
77	Crankcase Bolt Guide (8x14)	2	XP4400EH-77	DJ168F-11002-F
78	Oil Fill Cap	1	XP4400EH-78	DJ168F-11007-A
79	Plate	1	XP4400EH-79	DF1800H-33016-A
80	Flange Bolt (M8x32)	6	XP4400EH-80	GBT5787-B8-35
81	Crankcase Cover	1	XP4400EH-81	DJ168FD-11001-C
82	Piston	1	XP4400EH-82	DJ170F-12001-B
83	Piston Ring Set	1	XP4400EH-83	DJ170F-12300-A
84	Starter Motor	1	XP4400EH-84	DJ168F-18600-A

Other Generator Parts

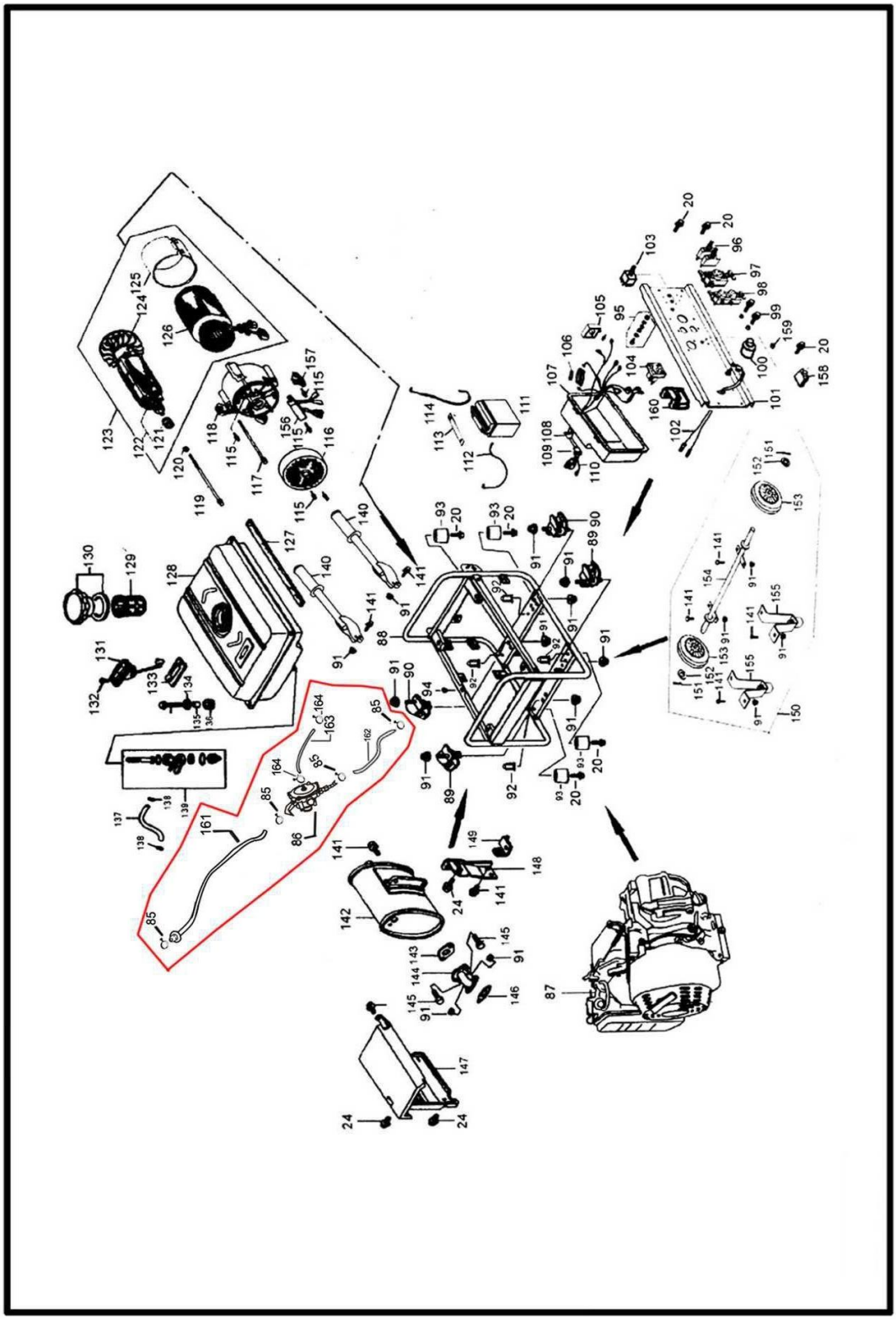

Other Generator Parts

Part #	Description	Qty	Item #	Cross-Reference
85	Clip, Tube	4	XP4400EH-85	XP4400EH-85
86	Propane Regulator / Release Valve	1	XP4400EH-86	XP4400EH-86
87	Gasoline Engine Complete	1	XP4400EH-87	DJ170FD-BD
88	Generator Frame Complete	1	XP4400EH-88	XP4400E-31100-BK
89	Vibration Mount A	2	XP4400EH-89	DF2500H-31201-A
90	Vibration Mount B	2	XP4400EH-90	DF2500H-31202-A
91	Flange Nut (M8)	18	XP4400EH-91	GBT6177-N-8
92	Flange Nut (M6)	4	XP4400EH-92	GBT889-N-8
93	Rubber Foot, Frame	4	XP4400EH-93	XP4400EH-93
94	Fuel Tank Rubber Pad	2	XP4400EH-94	DF2500H-14304-A
95	Earth Terminal (Complete)	1	XP4400EH-95	34107
96	Circuit Breaker (15A 240v)	1	XP4400EH-96	34206-100
97	Receptacle (30A)	1	XP4400EH-97	34204-003
98	Receptacle (20A, Duplex)	2	XP4400EH-98	34204-005
99	DC Output Post (Set)	2	XP4400EH-99	34204-038
100	Engine Switch (Key)	1	XP4400EH-100	34203-002
101	Control Panel Face, Metal Only	1	XP4400EH-101	**SEE REF #
102	Sub-Wiring Harness	1	XP4400EH-102	634213-002
103	Voltage Selection Switch	1	XP4400EH-103	34202-006
104	Voltmeter	1	XP4400EH-104	34205-001
105	Diode Assy	1	XP4400EH-105	34210-001
106	Fuse	1	XP4400EH-106	XP4400EH-106
107	Control Panel Rear Cover	1	XP4400EH-107	34102-A
108	Rubber Boot, Main Wiring Harness	1	XP4400EH-108	34109
109	Rubber Boot, Generator AC Out	1	XP4400EH-109	34117
110	Main Wiring Harness	1	XP4400EH-110	34212-001
111	Battery (7ah 12v DC)	1	XP4400EH-111	31300-001
112	Positive Battery Cable	1	XP4400EH-112	31038-001
113	Battery Support Bar	1	XP4400EH-113	DF1800H-31033-A
114	Negative Battery Cable	1	XP4400EH-114	31040-001
115	Flange Bolt (M5x12)	2	XP4400EH-115	GBT5789-B5-16
116	Generator End Cover	1	XP4400EH-116	DF1800H-33006-B
117	Flange Bolt (M6x125)	4	XP4400EH-117	DF3500H-33015-A
118	Generator End Support	1	XP4400EH-118	DF1800H-33005-A
119	Bolt (M8x180)	1	XP4400EH-119	DF3500H-33003-A
120	Plain Washer (10)	1	XP4400EH-120	GBT93-LW-8
121	Bearing 6204-2RS	1	XP4400EH-121	GB276-89-6204
122	Rotor (Comp)	1	XP4400EH-122	DF3500H-33110-B
123	Stator and Rotor (Comp)	1	XP4400EH-123	DF3000H33103-B-23602
124	Generator Fan	1	XP4400EH-124	DF2500H-33023

Part #	Description	Qty	Item #	Cross-Reference
125	Stator Cover	1	XP4400EH-125	DF3500H-33129
126	Stator (Comp)	1	XP4400EH-126	DF3500H-33120
127	Fuel Tank Rubber Pad	1	XP4400EH-127	DF2500H-14322-D
128	Fuel Tank	1	XP4400EH-128	DF2500H-14300-B
129	Fuel Tank Filter Cup	1	XP4400EH-129	14307
130	Fuel Tank Cap	1	XP4400EH-130	14306
131	Fuel Tank Sensor (Complete)	1	XP4400EH-131	14303
132	Screw (M5x10)	2	XP4400EH-132	GBT819-B-5
133	Fuel Tank Sensor Gasket	1	XP4400EH-133	14313
134	Washer	4	XP4400EH-134	14311
135	Collar	4	XP4400EH-135	14305
136	Cushion	4	XP4400EH-136	14304
137	Gas Tube (4.5x165)	1	XP4400EH-137	DF168FD-14007-C
138	Tube Clip	2	XP4400EH-138	DJ168F-14008-A
139	Fuel Valve	1	XP4400EH-139	DF2500H-14302-A
140	Handles	2	XP4400EH-140	DF3800H-31058-C
141	Flange Bolt (M8x16)	17	XP4400EH-141	GBT889-N-8X20
142	Muffler	1	XP4400EH-142	DH2500H-14400-E
143	Muffler Gasket	1	XP4400EH-143	DJ168F-14006-A
144	Exhaust Pipe	1	XP4400EH-144	DF2500H-14009
145	Flange Bolt (M8x25)	2	XP4400EH-145	GB5787-B-6
146	Exhaust Pipe Gasket	1	XP4400EH-146	DJ188F-14010-A
147	Muffler Heat Shield	1	XP4400EH-147	DF2500H-14018-B
148	Muffler Bracket	1	XP4400EH-148	XP4400E-148
149	Muffler Bracket Plate	1	XP4400EH-149	XP4400E-149
150	Wheel Kit (Assy)	1	XP4400EH-150	XP4400E-WK
151	Wheel Retaining Pin	2	XP4400EH-151	DF2500H-31019-B
153	Wheel, Semi-Solid 8"	2	XP4400EH-153	31017-F
154	Wheel Shaft	1	XP4400EH-154	DF3000H-31018-F
155	Wheel Shaft Bracket	2	XP4400EH-155	DF3000H-31070-E
156	Voltage Regulator	1	XP4400EH-156	DF2500H-33011-A
157	Brush (Assy)	1	XP4400EH-157	DF3500H-33001
158	Circuit Protector (10A, DC)	1	XP4400EH-158	34208-004
159	Recharge Indicator LED	1	XP4400EH-159	XP4400E-159
160	12V DC Regulator	1	XP4400EH-160	34224-001
161	Propane Hose w/ Collar	1	XP4400EH-161	XP4400E-161
162	Propane Hose to Carburetor A	1	XP4400EH-162	XP4400E-162
163	Propane Hose to Carburetor B	1	XP4400EH-163	XP4400E-163
164	Propane Hose Clip (8)	2	XP4400EH-164	XP4400E-164

DuroMax
NEXT GENERATION POWER SYSTEMS

DUAL FUEL

Rugged. Durable. Dependable. Power When You Need It!

Recreation

Construction

Portable Power

Ice Storms

Hurricanes

Electrical Storms

Product Support	Product Information, Application, Service Info & Warranty Questions
Please email us at support@duromaxgenerators.com or call (800) 629-3325 Monday – Friday 6:00 am – 6:00 pm (PST)	