**UNITED STATES DISTRICT COURT**
**EASTERN DISTRICT OF WISCONSIN**

---

CHAMPION POWER EQUIPMENT, INC.

Plaintiff,

v.

GENERAC POWER SYSTEMS, INC.

Defendant.

Case No. 24-cv-1281

**JURY TRIAL DEMANDED**

---

**DEFENDANT'S FIRST AMENDED ANSWER TO PLAINTIFF'S COMPLAINT AND DEMAND FOR JURY TRIAL AND COUNTERCLAIMS**

GENERAC POWER SYSTEMS, INC. ("Generac") by and through its undersigned attorneys, hereby files this First Amended Answer to Plaintiff CHAMPION POWER EQUIPMENT, INC.'S ("Champion" or "Plaintiff") Complaint and its Counterclaims. Unless expressly admitted, all allegations are denied.

## THE PARTIES[1]

1. Champion is a duly organized and operating Nevada corporation incorporated at 6370 S Pioneer Way, Unit 101, Las Vegas, Nevada 89113. Champion designs and sells single fuel and multi-fuel generators, power stations, log splitters, chipper shredders, leaf blowers, tillers, chainsaws, cultivators, lawn edgers, augers, string trimmers, pressure washers, water pumps, snow blowers, winches, hoists, accessories, and other equipment.

**ANSWER:** Generac admits that Champion sells single- and multi-fuel generators. Generac is without information to admit or deny the remaining allegations of this paragraph and therefore denies the same.

2. Champion goes to great lengths in protecting its proprietary intellectual property and expends considerable resources in obtaining patents in the United States and other foreign jurisdictions. Champion has filed over 70 patent applications and has been awarded 61 U.S. patents.

**ANSWER:** Generac is without information to admit or deny the allegations of this paragraph and therefore denies the same.

3. Generac is a duly organized and operating Wisconsin Corporation whose principal place of business is located at S45W29290 State Road 59, Waukesha, WI 53189-9071. Upon information and belief, Generac designs, manufactures, imports, and sells single-fuel and multi-fuel generators, power stations, and accessories that directly compete with Champion. Generac advertises its products for sale nationally and has advertised, marketed, and sold products infringing Champion's intellectual property rights within the State of Wisconsin, and all other states and territories of the United States.

**ANSWER:** Generac admits it is a Wisconsin corporation whose principal place of business is located at S45W29290 Highway 59, Waukesha, Wisconsin. Generac admits it designs,

[1] Generac repeats Plaintiff's headings for ease of understanding. By repeating Plaintiff's headings, Generac does not admit the veracity of the headings or any statements under the headings and specifically denies the same.

manufactures, imports, and sells single-fuel and multi-fuel generators, power stations, and accessories, and that it advertises the same nationally. Otherwise denied.

4. Generac also does business under the name "Powermate"[1] [n.1: The website https://www.powermate.com sets forth the following: "Generac Power Systems, Inc., DBA Powermate"] and sells multi-fuel generators under the name Powermate. Powermate generators are available for purchase at https://www.powermate.com. Additionally, according to United States Patent and Trademark Office records, Generac Power Systems, Inc. is the owner of U.S. Trademark Registration No. 4,825,288 for POWERMATE with the following identification of goods in International Class 007: "Outdoor chore equipment, namely, power blowers for leaves, power-operated lawn edgers, earth augers, power-operated cultivators, power tillers, lawnmowers, power lawn and garden tools in the nature of chippers and shredders, power machines for splitting logs for firewood, and parts and accessories related to the foregoing." Doing business as Powermate, Generac designs, manufactures, imports, and sells multi-fuel generators and accessories that also directly compete with Champion.

**ANSWER:** Generac admits it does business under the name Powermate. Generac admits that Powermate-branded generators are available for purchase on https://www.powermate.com. Generac admits it is the owner of U.S. Trademark Registration No. 4,825,288 for POWERMATE. Otherwise denied.

5. Champion has sent Generac cease and desist demands regarding Generac and Powermate generators. Generac has ignored those demands and continues to sell infringing generators.

**ANSWER:** Generac admits that Champion has sent Generac meritless cease and desist demands regarding Generac and Powermate generators. Generac responded to Champion's meritless cease and desist letters and denied infringement. Otherwise denied.

## JURISDICTION AND VENUE

6. This is an action for patent infringement under the patent laws of the United States, 35 U.S.C. §§ 271, et seq.

**ANSWER:** This paragraph contains a legal conclusion to which no response is required. The paragraph speaks for itself. Otherwise denied.

7. This Court has jurisdiction over the subject matter of this patent infringement action pursuant to 28 U.S.C. §§ 1331 and 1338(a).

**ANSWER:** This paragraph contains a legal conclusion to which no response is required. The paragraph speaks for itself. Otherwise denied.

8. This Court has personal jurisdiction over Generac because Generac has committed acts of patent infringement within the State of Wisconsin giving rise to this action. Generac also has manufacturing facilities in the State of Wisconsin. Further, Generac's headquarters is located in Wisconsin. Generac's electronic commerce advertisements, offers for sale, sales, and physical location have established at least minimum contacts with the forum such that the exercise of jurisdiction over it would not offend traditional notions of fair play and substantial justice.

**ANSWER:** Generac does not contest personal jurisdiction at this time. Generac specifically denies it has committed patent infringement. The remainder of this paragraph contains a legal conclusion to which no response is required. Otherwise denied.

9. Venue is proper in this judicial district pursuant to 28 U.S.C. §§ 1391(a), 1391(b) 1391(c), and 1400(b) for at least the reasons that (1) Generac resides in this district and (2) Generac has committed acts within this district giving rise to this action and does business in this district, including sales, offers for sale, and providing service and/or support to its customers in this district.

**ANSWER:** Generac does not contest venue at this time. Generac specifically denies it has committed patent infringement. The remainder of this paragraph contains a legal conclusion to which no response is required. Otherwise denied.

**COUNT I: [NON-]INFRINGEMENT OF U.S. PATENT NO. 10,221,780**

10. Paragraphs 1 through 9 are incorporated by reference as if fully set forth herein.

**ANSWER:** No response is required. To the extent a response is required, Generac incorporates its responses to the allegations of paragraphs 1 through 9 as if set forth herein.

11. U.S. Patent No. 10,221,780 is titled "DUAL FUEL LOCKOUT SWITCH FOR GENERATOR ENGINE." U.S. Patent No. 10,221,780 was duly and legally issued on March 5, 2019. A true and correct copy of U.S. Patent No. 10,221,780 is attached as Exhibit A.

**ANSWER:** Exhibit A speaks for itself. Otherwise denied.

12. Champion is the lawful assignee of the entire right, title, and interest in and to U.S. Patent No. 10,221,780 and possesses all rights of recovery under the patent, including the right to recover damages for past infringement.

**ANSWER:** Generac is without information to admit or deny the allegations of this paragraph and therefore denies the same.

13. Champion has acquired and inspected the following Generac/Powermate generator models that Generac has been and is making, using, selling, or offering for sale within the United States, or importing into the United States, and that infringe one or more claims of U.S. Patent No. 10,221,780:

a. Powermate Model PM4500DF, a multi-fuel generator;

b. Powermate Model PM7500DF, a multi-fuel generator;

c. Generac Model GP7500E, a multi-fuel generator; and

d. Powermate Model DF3500E, a multi-fuel generator.

**ANSWER:** Generac admits that it has made, used, sold, offered for sale, or imported Powermate Model PM4500DF, Powermate Model PM7500DF, Generac Model GP7500E, and Powermate Model DF3500E. Generac specifically denies that any such activity infringes U.S. Patent. No. 10,221,780 ("the '780 Patent"). Generac is without information to admit or deny the remaining allegations of this paragraph and therefore denies the same.

14. Upon acquisition, disassembly as needed, review of owner's manuals and electrical schematics, and inspection, it was determined that each of the foregoing Generac generator models include all of the elements of at least claims 1, 2, 6-9, 11, 14 and 15 of U.S. Patent No. 10,221,780. Each of the foregoing Generac generator models infringes:

a. Independent claim 1 by specifically including a mechanical fuel lockout switch for a dual fuel engine having a mechanical fuel valve actuateable between a first position and a second position to selectively control fuel flow to the dual fuel engine from a first fuel source through a first fuel line and a second fuel source through a second fuel line and a fuel lockout apparatus coupled to the mechanical fuel valve, wherein the mechanical fuel lockout switch communicates the first fuel source to the dual fuel engine and prevents communication between the second fuel source and the dual fuel engine when the mechanical fuel valve is in the first position and communicates the second fuel source to the dual fuel engine and interrupts the first fuel source communication with the dual fuel engine when in the second position and wherein the fuel lockout apparatus is configured to prevent the second fuel source from coupling to the second fuel line while the mechanical fuel valve is in the first position and permit the second fuel source to couple to the second fuel line while the mechanical fuel valve is in the second position, as called for in claim 1 of U.S. Patent No. 10,221,780.

b. Dependent claim 2 by specifically including all the aforementioned elements of claim 1 and, in addition, the fuel lockout apparatus prevents actuation of the mechanical fuel valve to the first position when the second fuel source communicates with the dual fuel engine, as called for in claim 2 of U.S. Patent No. 10,221,780.

c. Dependent claim 6 by specifically including all the aforementioned elements of claim 1 and, in addition, the mechanical fuel valve and the fuel lockout apparatus operate together to ensure that fuel from the first fuel source and fuel from the second fuel source are not simultaneously delivered to the dual fuel engine, as called for in claim 6 of U.S. Patent No. 10,221,780.

d. Dependent claim 7 by specifically including all the aforementioned elements of claim 6 and, in addition, the first fuel source provides liquid fuel from a liquid fuel tank to the dual fuel engine and the second fuel source provides gaseous fuel from a pressurized fuel container to the dual fuel engine, as called for in claim 7 of U.S. Patent No. 10,221,780.

e. Independent claim 8 by specifically including a mechanical fuel lockout switch for an internal combustion engine, the mechanical fuel lockout being assembled by providing an internal combustion engine configured to operate on a fuel from a first fuel source and a different fuel from a second fuel source, coupling a mechanical fuel valve to the internal combustion engine actuateable between a first position and a second position to selectively control fuel flow to the internal combustion engine from the first fuel source through a first fuel line and the second fuel source through a second fuel line, and coupling a fuel lockout apparatus to the mechanical fuel valve, wherein the fuel lockout apparatus prevents actuation of the mechanical fuel valve to the first position when the second fuel source is coupled to the internal combustion engine, as called for in claim 8 of U.S. Patent No. 10,221,780.

f. Dependent claim 9 by specifically including all the aforementioned elements of claim 8 and, in addition, the fuel lockout apparatus is further configured to prevent coupling of the second fuel source to the second fuel line while the mechanical fuel valve is in the first position and to permit coupling of the second fuel source to the second fuel line while the mechanical fuel valve is in the second position, as called for in claim 9 of U.S. Patent No. 10,221,780.

g. Dependent claim 11 by specifically including all the aforementioned elements of claim 8 and, in addition, the mechanical fuel lockout switch is assembled by coupling a fuel regulator system to the second fuel source to reduce fuel pressure therefrom and deliver fuel to the second fuel line at a pressure required for operation of the internal combustion engine, as called for in claim 11 of U.S. Patent No. 10,221,780.

h. Dependent claim 14 by specifically including all the aforementioned elements of claim 8 and, in addition, the mechanical fuel lockout switch is

assembled by providing gasoline in a liquid fuel tank as the first fuel source and a liquefied petroleum gas (LPG) in a pressurized fuel container as the second fuel source, as called for in claim 14 of U.S. Patent No. 10,221,780.

i. Independent claim 15 by specifically including a mechanical fuel lockout switch for a dual fuel engine having a mechanical fuel valve actuateable between a first position and a second position to selectively control fuel flow to the dual fuel engine from a first fuel source through a first fuel line and a second fuel source through a second fuel line and a fuel lockout apparatus coupled to the mechanical fuel valve, wherein the mechanical fuel lockout switch communicates the first fuel source to the dual fuel engine and prevents communication between the second fuel source and the dual fuel engine when the mechanical fuel valve is in the first position and communicates the second fuel source to the dual fuel engine and interrupts the first fuel source communication with the dual fuel engine when in the second position and wherein the fuel lockout apparatus prevents actuation of the mechanical fuel valve to the first position when the second fuel source communicates with the dual fuel engine.

Therefore, each of the foregoing Generac generator models listed in Paragraph 13(a)-(d) infringes at least claims 1, 2, 6-9, 11, 14 and 15 of U.S. Patent No. 10,221,780.

**ANSWER:** Denied.

15. Upon information and belief, Generac has been and is now making, using, selling, or offering for sale within the United States, or importing into the United States, the following additional generator model: Powermate Model DF7500E, a multi-fuel portable generator.

**ANSWER:** Generac admits that it has made, used, sold, offered for sale, or imported Powermate Model DF7500E. Otherwise denied.

16. Upon review of the owner's manual of the Powermate Model DF7500E generator shared with the Powermate Model DF3500E generator, review of images and electrical schematics of the Powermate Model DF7500E generator, and comparison of the images and electrical schematics of the Powermate Model DF7500E generator to images and electrical schematics of the Powermate Model DF3500E generator listed in Paragraph 13(d), it was determined that the Powermate Model DF7500E generator includes all of the elements of at least claims 1, 2, 6-9, 11, 14 and 15 of U.S. Patent No. 10,221,780. The Powermate Model DF7500E generator infringes:

a. Independent claim 1 by specifically including a mechanical fuel lockout switch for a dual fuel engine having a mechanical fuel valve actuateable between a first position and a second position to selectively control fuel flow to the dual fuel engine from a first fuel source through a first fuel line and a second fuel source through a second fuel line and a fuel lockout apparatus coupled to the mechanical fuel valve, wherein the mechanical fuel lockout switch communicates the first fuel source to the dual fuel engine and prevents communication between the second fuel source and the dual fuel

engine when the mechanical fuel valve is in the first position and communicates the second fuel source to the dual fuel engine and interrupts the first fuel source communication with the dual fuel engine when in the second position and wherein the fuel lockout apparatus is configured to prevent the second fuel source from coupling to the second fuel line while the mechanical fuel valve is in the first position and permit the second fuel source to couple to the second fuel line while the mechanical fuel valve is in the second position, as called for in claim 1 of U.S. Patent No. 10,221,780.

b. Dependent claim 2 by specifically including all the aforementioned elements of claim 1 and, in addition, the fuel lockout apparatus prevents actuation of the mechanical fuel valve to the first position when the second fuel source communicates with the dual fuel engine, as called for in claim 2 of U.S. Patent No. 10,221,780.

c. Dependent claim 6 by specifically including all the aforementioned elements of claim 1 and, in addition, the mechanical fuel valve and the fuel lockout apparatus operate together to ensure that fuel from the first fuel source and fuel from the second fuel source are not simultaneously delivered to the dual fuel engine, as called for in claim 6 of U.S. Patent No. 10,221,780.

d. Dependent claim 7 by specifically including all the aforementioned elements of claim 6 and, in addition, the first fuel source provides liquid fuel from a liquid fuel tank to the dual fuel engine and the second fuel source provides gaseous fuel from a pressurized fuel container to the dual fuel engine, as called for in claim 7 of U.S. Patent No. 10,221,780.

e. Independent claim 8 by specifically including a mechanical fuel lockout switch for an internal combustion engine, the mechanical fuel lockout being assembled by providing an internal combustion engine configured to operate on a fuel from a first fuel source and a different fuel from a second fuel source, coupling a mechanical fuel valve to the internal combustion engine actuateable between a first position and a second position to selectively control fuel flow to the internal combustion engine from the first fuel source through a first fuel line and the second fuel source through a second fuel line, and coupling a fuel lockout apparatus to the mechanical fuel valve, wherein the fuel lockout apparatus prevents actuation of the mechanical fuel valve to the first position when the second fuel source is coupled to the internal combustion engine, as called for in claim 8 of U.S. Patent No. 10,221,780.

f. Dependent claim 9 by specifically including all the aforementioned elements of claim 8 and, in addition, the fuel lockout apparatus is further configured to prevent coupling of the second fuel source to the second fuel line while the mechanical fuel valve is in the first position and to permit coupling of the second fuel source to the second fuel line while the mechanical fuel valve is in the second position, as called for in claim 9 of U.S. Patent No. 10,221,780.

g. Dependent claim 11 by specifically including all the aforementioned elements of claim 8 and, in addition, the mechanical fuel lockout switch is

assembled by coupling a fuel regulator system to the second fuel source to reduce fuel pressure therefrom and deliver fuel to the second fuel line at a pressure required for operation of the internal combustion engine, as called for in claim 11 of U.S. Patent No. 10,221,780.

h. Dependent claim 14 by specifically including all the aforementioned elements of claim 8 and, in addition, the mechanical fuel lockout switch is assembled by providing gasoline in a liquid fuel tank as the first fuel source and a liquefied petroleum gas (LPG) in a pressurized fuel container as the second fuel source, as called for in claim 14 of U.S. Patent No. 10,221,780.

i. Independent claim 15 by specifically including a mechanical fuel lockout switch for a dual fuel engine having a mechanical fuel valve actuateable between a first position and a second position to selectively control fuel flow to the dual fuel engine from a first fuel source through a first fuel line and a second fuel source through a second fuel line and a fuel lockout apparatus coupled to the mechanical fuel valve, wherein the mechanical fuel lockout switch communicates the first fuel source to the dual fuel engine and prevents communication between the second fuel source and the dual fuel engine when the mechanical fuel valve is in the first position and communicates the second fuel source to the dual fuel engine and interrupts the first fuel source communication with the dual fuel engine when in the second position and wherein the fuel lockout apparatus prevents actuation of the mechanical fuel valve to the first position when the second fuel source communicates with the dual fuel engine.

Therefore, Generac's Powermate Model DF7500E generator listed in Paragraph 15 infringes at least claims 1, 2, 6-9, 11, 14 and 15 of U.S. Patent No. 10,221,780.

**ANSWER:** Denied.

17. Champion has no adequate remedy at law against Generac's acts of infringement and will suffer irreparable harm unless Generac is preliminarily and permanently enjoined from its infringement of U.S. Patent No. 10,221,780.

**ANSWER:** Denied.

18. Upon information and belief, Generac's infringement has been willful, deliberate, and with knowledge of Champion's rights under U.S. Patent No. 10,221,780.

**ANSWER:** Denied.

19. Upon information and belief, at least as of July 7, 2020, and again on April 4, 2024, the dates Champion sent Generac cease and desist letters demanding the cessation of infringement by Generac of Champion's patents, Generac has monitored Champion's patents and published patent applications and had actual notice of all of Champion's patents and published patent applications as of their publication dates.

**ANSWER:** Generac admits that Champion sent Generac letters dated July 7, 2020, and April 4, 2024. To the extent this paragraph implies that the July 7, 2020, and April 4, 2024, letters included a demand to cease infringement of the '780 Patent, Generac denies the same. Otherwise denied.

20. Generac, by way of its infringing activity, has caused and continues to cause Champion to suffer damages in an amount to be determined at trial.

**ANSWER:** Denied.

**COUNT II: [NON-]INFRINGEMENT OF U.S. PATENT NO. 10,598,101**

21. Paragraphs 1 through 20 are incorporated by reference as if fully set forth herein.

**ANSWER:** No response is required. To the extent a response is required, Generac incorporates its responses to the allegations of paragraphs 1 through 20 as if set forth herein.

22. U.S. Patent No. 10,598,101 is titled "DUAL FUEL SELECTOR SWITCH." U.S Patent No. 10,598,101 was duly and legally issued on March 24, 2020. A true and correct copy of U.S. Patent No. 10,598,101 is attached as Exhibit B.

**ANSWER:** Exhibit B speaks for itself. Otherwise denied.

23. Champion is the lawful assignee of the entire right, title, and interest in and to U.S. Patent No. 10,598,101 and possesses all rights of recovery under the patent, including the right to recover damages for past infringement.

**ANSWER:** Generac is without information to admit or deny the allegations of this paragraph and therefore denies the same.

24. Champion has acquired and inspected the following Generac generator models that Generac has been and is making, using, selling, or offering for sale within the United States, or importing into the United States, and that infringe one or more claims of U.S. Patent No. 10,598,101:

a. Powermate Model PM4500DF, a multi-fuel portable generator;

b. Powermate Model PM7500DF, a multi-fuel portable generator;

c. Generac Model GP7500E, a multi-fuel portable generator; and

d. Powermate Model DF3500E, a multi-fuel portable generator.

**ANSWER:** Generac admits that it has made, used, sold, offered for sale, or imported Powermate Model PM4500DF, Powermate Model PM7500DF, Generac Model GP7500E, and Powermate Model DF3500E. Generac specifically denies that any such activity infringes U.S. Patent. No. 10,598,101 ("the '101 Patent"). Generac is without information to admit or deny the remaining allegations of this paragraph and therefore denies the same.

25. Upon acquisition, disassembly as needed, review of owner's manuals and electrical schematics, and inspection, it was determined that each of the foregoing Generac generator models includes all of the elements of at least claims 1, 2, 8, 9, 18, and 19 of U.S. Patent No. 10,598,101. Each of the foregoing Generac generator models infringes:

a. Independent claim 1 by specifically including a fuel selector for use with a dual fuel generator, the fuel selector comprising: a valve assembly fluidly connected to each of a first fuel source and a second fuel source, the valve assembly being operable to selectively control a first fuel flow and a second fuel flow from the first fuel source and the second fuel source, respectively, to an engine of the dual fuel generator; and a selector switch positioned on the valve assembly to allow a user to manually select one of the first fuel flow and the second fuel flow; wherein the valve assembly comprises: a first fuel valve having open and closed positions to selectively control the first fuel flow to the engine; and a second fuel valve having open and closed positions to selectively control the second fuel flow to the engine; and wherein the first fuel valve and the second fuel valve are mechanical valves, as called for in claim 1 of U.S. Patent No. 10,598,101.

b. Dependent claim 2 by specifically including all the aforementioned elements of claim 1 and, in addition, wherein the selector switch provides for manual actuation of the first fuel valve and the second fuel valve between the open and closed positions, as called for in claim 2 of U.S. Patent No. 10,598,101.

c. Dependent claim 8 by specifically including all the aforementioned elements of claim 1 and, in addition, wherein the first fuel valve is attached to a liquefied petroleum gas (LPG) fuel source and wherein the second fuel valve is attached to a gasoline source, as called for in claim 8 of U.S. Patent No. 10,598,101.

d. Dependent claim 9 by specifically including all the aforementioned elements of claim 1 and, in addition, wherein the mechanical valve of each of the first fuel valve and the second fuel valve is a non-solenoid valve, as called for in claim 9 of U.S. Patent No. 10,598,101.

e. Independent claim 18 by specifically including a fuel selector for use with a dual fuel generator, the fuel selector comprising: a valve assembly fluidly connected to each of a first fuel source and a second fuel source, the valve

assembly being operable to selectively control a first fuel flow and a second fuel flow from the first fuel source and the second fuel source, respectively, to an engine of the dual fuel generator; and a selector switch positioned on the valve assembly to allow a user to manually select one of the first fuel flow and the second fuel flow; wherein the valve assembly comprises: two fuel inputs, with a first fuel input connected to the first fuel source and a second fuel input connected to the second fuel source; and two fuel outputs supplying fuel from only one of the first fuel source or the second fuel source, wherein the valve assembly comprises a first fuel valve having open and closed positions to selectively control the first fuel flow to the engine; and a second fuel valve having open and closed positions to selectively control the second fuel flow to the engine, as called for in claim 18 of U.S. Patent No. 10,598,101.

f. Dependent claim 19 by specifically including all the aforementioned elements of claim 18 and, in addition, wherein the first fuel valve and the second fuel valve are non-solenoid, mechanical valves, as called for in claim 19 of U.S. Patent No. 10,598,101.

Therefore, each of the foregoing Generac generator models listed in Paragraph 24(a)-(d) infringes at least claims 1, 2, 8, 9, 18, and 19 of U.S. Patent No. 10,598,101.

**ANSWER:** Denied.

26. Upon information and belief, Generac has been and is now making, using, selling, or offering for sale within the United States, or importing into the United States, the following additional generator model: Powermate Model DF7500E, a multi-fuel portable generator.

**ANSWER:** Generac admits that it has made, used, sold, offered for sale, or imported Powermate Model DF7500E. Otherwise denied.

27. Upon review of the owner's manual of the Powermate Model DF7500E generator shared with the Powermate Model DF3500E generator, review of images and electrical schematics of the Powermate Model DF7500E generator, and comparison of the images and electrical schematics of the Powermate Model DF7500E generator to images and electrical schematics of the Powermate Model DF3500E generator listed in Paragraph 24(d), it was determined that the Powermate Model DF7500E generator includes all of the elements of at least claims 1, 2, 8, 9, 18, and 19 of U.S. Patent No. 10,598,101. The Powermate Model DF7500E generator infringes:

a. Independent claim 1 by specifically including a fuel selector for use with a dual fuel generator, the fuel selector comprising: a valve assembly fluidly connected to each of a first fuel source and a second fuel source, the valve assembly being operable to selectively control a first fuel flow and a second fuel flow from the first fuel source and the second fuel source, respectively, to an engine of the dual fuel generator; and a selector switch positioned on the valve assembly to allow a user to manually select one of the first fuel flow and the second fuel flow; wherein the valve assembly comprises: a

first fuel valve having open and closed positions to selectively control the first fuel flow to the engine; and a second fuel valve having open and closed positions to selectively control the second fuel flow to the engine; and wherein the first fuel valve and the second fuel valve are mechanical valves, as called for in claim 1 of U.S. Patent No. 10,598,101.

b. Dependent claim 2 by specifically including all the aforementioned elements of claim 1 and, in addition, wherein the selector switch provides for manual actuation of the first fuel valve and the second fuel valve between the open and closed positions, as called for in claim 2 of U.S. Patent No. 10,598,101.

c. Dependent claim 8 by specifically including all the aforementioned elements of claim 1 and, in addition, wherein the first fuel valve is attached to a liquefied petroleum gas (LPG) fuel source and wherein the second fuel valve is attached to a gasoline source, as called for in claim 8 of U.S. Patent No. 10,598,101.

d. Dependent claim 9 by specifically including all the aforementioned elements of claim 1 and, in addition, wherein the mechanical valve of each of the first fuel valve and the second fuel valve is a non-solenoid valve, as called for in claim 9 of U.S. Patent No. 10,598,101.

e. Independent claim 18 by specifically including a fuel selector for use with a dual fuel generator, the fuel selector comprising: a valve assembly fluidly connected to each of a first fuel source and a second fuel source, the valve assembly being operable to selectively control a first fuel flow and a second fuel flow from the first fuel source and the second fuel source, respectively, to an engine of the dual fuel generator; and a selector switch positioned on the valve assembly to allow a user to manually select one of the first fuel flow and the second fuel flow; wherein the valve assembly comprises: two fuel inputs, with a first fuel input connected to the first fuel source and a second fuel input connected to the second fuel source; and two fuel outputs supplying fuel from only one of the first fuel source or the second fuel source, wherein the valve assembly comprises a first fuel valve having open and closed positions to selectively control the first fuel flow to the engine; and a second fuel valve having open and closed positions to selectively control the second fuel flow to the engine, as called for in claim 18 of U.S. Patent No. 10,598,101.

f. Dependent claim 19 by specifically including all the aforementioned elements of claim 18 and, in addition, wherein the first fuel valve and the second fuel valve are non-solenoid, mechanical valves, as called for in claim 19 of U.S. Patent No. 10,598,101.

Therefore, the Powermate Model DF7500E generator listed in Paragraph 26 infringes at least claims 1, 2, 8, 9, 18, and 19 of U.S. Patent No. 10,598,101.

**ANSWER:** Denied.

28. Champion has no adequate remedy at law against Generac's acts of infringement and will suffer irreparable harm unless Generac is preliminarily and permanently enjoined from its infringement of U.S. Patent No. 10,598,101.

**ANSWER:** Denied.

29. Upon information and belief, Generac's infringement has been willful, deliberate, and with knowledge of Champion's rights under U.S. Patent No. 10,598,101.

**ANSWER:** Denied.

30. Upon information and belief, at least as of July 7, 2020, and again on April 4, 2024, the dates Champion sent Generac cease and desist letters demanding the cessation of infringement by Generac of Champion's patents, Generac has monitored Champion's patents and published patent applications and had actual notice of all of Champion's patents and published patent applications as of their publication dates.

**ANSWER:** Generac admits that Champion sent Generac letters dated July 7, 2020, and April 4, 2024. To the extent this paragraph implies that the April 4, 2024, letter included a demand to cease infringement of the '101 Patent, Generac denies the same. Otherwise denied.

31. Generac, by way of its infringing activity, has caused and continues to cause Champion to suffer damages in an amount to be determined at trial.

**ANSWER:** Denied.

**COUNT III: [NON-]INFRINGEMENT OF U.S. PATENT NO. 10,697,398**

32. Paragraphs 1 through 31 are incorporated by reference as if fully set forth herein.

**ANSWER:** No response is required. To the extent a response is required, Generac incorporates its responses to the allegations of paragraphs 1 through 31 as if set forth herein.

33. U.S. Patent No. 10,697,398 is titled "BATTERYLESS DUAL FUEL ENGINE WITH LIQUID FUEL CUT-OFF." U.S. Patent No. 10,697,398 was duly and legally issued on June 30, 2020. A true and correct copy of U.S. Patent No. 10,697,398 is attached as Exhibit C.

**ANSWER:** Exhibit C speaks for itself. Otherwise denied.

34. Champion is the lawful assignee of the entire right, title, and interest in and to U.S. Patent No. 10,697,398 and possesses all rights of recovery under the patent, including the right to recover damages for past infringement.

**ANSWER:** Generac is without information to admit or deny the allegations of this paragraph and therefore denies the same.

35. Champion has acquired and inspected the following Generac generator models that Generac has been and is making, using, selling, or offering for sale within the United States, or importing into the United States, and that infringe one or more claims of U.S. Patent No. 10,697,398:

a. Powermate Model PM4500DF, a multi-fuel portable generator;

b. Powermate Model PM7500DF, a multi-fuel portable generator; and

c. Generac Model GP7500E, a multi-fuel portable generator.

**ANSWER:** Generac admits that it has made, used, sold, offered for sale, or imported Powermate Model PM4500DF, Powermate Model PM7500DF, and Generac Model GP7500E. Generac specifically denies that any such activity infringes U.S. Patent. No. 10,697,398 ("the '398 Patent"). Generac is without information to admit or deny the remaining allegations of this paragraph and therefore denies the same.

36. Upon acquisition, disassembly as needed, review of owner's manuals and electrical schematics, and inspection, it was determined that each of the foregoing Generac generator models includes all of the elements of at least claims 43, 44, and 56-58 of U.S. Patent No. 10,697,398. Each of the foregoing Generac generator models infringes:

a. Independent claim 43 by specifically including a dual fuel engine having an engine operable on a gaseous fuel and a liquid fuel, a switch to change operation of an engine between gaseous fuel and liquid fuel, a carburetor attached to an intake of the engine to mix air and fuel and connect to a gaseous fuel source and a liquid fuel source, a liquid fuel valve positioned along a liquid fuel line coupling a liquid fuel source to a carburetor, a gaseous fuel valve positioned along a gaseous fuel line coupling a gaseous fuel source to the carburetor, and a liquid fuel cut-off incorporated into the carburetor to interrupt liquid fuel upon actuation of the switch from liquid to gaseous fuel, as called for in claim 43 of U.S. Patent No. 10,697,398.

b. Dependent claim 44 by specifically including all the aforementioned elements of claim 43 and, in addition, wherein the fuel shutoff is a manually actuated fuel shutoff, as called for in claim 44 of U.S. Patent No. 10,697,398.

c. Dependent claim 56 by specifically including all the aforementioned elements of claim 43 and, in addition, wherein the fuel shutoff extends through an opening into the float bowl such that the first end actuates in the

float bowl to close the fuel passage, as called for in claim 44 of U.S. Patent No. 10,697,398.

d. Independent claim 57 by specifically including a method of assembling a dual fuel engine comprising: providing an engine operable on a gaseous fuel and a liquid fuel; attaching a carburetor to an intake of the engine, the carburetor comprising: a throat to mix gaseous fuel with air and liquid fuel with air, a float bowl, and a fuel passage extending from the float bowl to the throat to provide liquid fuel; coupling a switch to the engine to change operation of the engine between gaseous fuel and liquid fuel; and attaching a liquid fuel cut-off to the carburetor to close the fuel passage upon actuation of the switch from liquid fuel to gaseous fuel, as called for in claim 57 of U.S. Patent No. 10,697,398.

e. Dependent claim 58 by specifically including all the aforementioned elements of claim 57 and, in addition, coupling a manually operated control operatively to the liquid fuel cut-off, as called for in claim 58 of U.S. Patent No. 10,697,398.

Therefore, each of the foregoing Generac generator models listed in Paragraph 35(a)-(c) infringes at least claims 43, 44, and 56-58 of U.S. Patent No. 10,697,398.

**ANSWER:** Denied.

37. Champion has acquired and inspected the following Generac generator model that Generac has been and is making, using, selling, or offering for sale within the United States, or importing into the United States, and that infringe one or more claims of U.S. Patent No. 10,697,398: Powermate Model DF3500E, a multi-fuel portable generator.

**ANSWER:** Generac admits that it has made, used, sold, offered for sale, or imported Powermate Model DF3500E. Generac specifically denies that any such activity infringes the '398 Patent. Generac is without information to admit or deny the remaining allegations of this paragraph and therefore denies the same.

38. Upon acquisition, disassembly as needed, review of owner's manuals and electrical schematics, and inspection, it was determined that the Powermate Model DF3500E generator includes all of the elements of at least claims 1, 3-7, 19, 20, 22, and 57 of U.S. Patent No. 10,697,398. The Powermate Model DF3500E generator model infringes:

a. Independent claim 1 by specifically including a dual fuel engine comprising: an engine operable on a gaseous fuel and a liquid fuel; a switch to change operation of the engine between gaseous fuel and liquid fuel; a carburetor attached to an intake of the engine to mix air and fuel and connect to a gaseous fuel source and a liquid fuel source; a liquid fuel valve positioned along a liquid fuel line coupling the liquid fuel source to the

carburetor; a gaseous fuel valve positioned along a gaseous fuel line coupling the gaseous fuel source to the carburetor; and a liquid fuel cut-off incorporated into the carburetor to interrupt liquid fuel upon actuation of the switch from liquid fuel to gaseous fuel, as called for in claim 1 of U.S. Patent No. 10,697,398.

b. Dependent claim 3 by specifically including all the aforementioned elements of claim 1 and, in addition, wherein the gaseous fuel is LPG and the liquid fuel is gasoline, as called for in claim 3 of U.S. Patent No. 10,697,398.

c. Dependent claim 4 by specifically including all the aforementioned elements of claim 1 and, in addition, wherein the engine is a pull-start engine having an electrical power generator to supply electrical power, as called for in claim 4 of U.S. Patent No. 10,697,398.

d. Dependent claim 5 by specifically including all the aforementioned elements of claim 4 and, in addition, wherein the switch is an electro-mechanical switch connecting one fuel source to the carburetor and connected to the electrical power generator; and wherein the liquid fuel cut-off is a solenoid connected to open and close a fuel path to the pull-start engine in response to reception of electrical power from the switch, as called for in claim 5 of U.S. Patent No. 10,697,398.

e. Dependent claim 6 by specifically including all the aforementioned elements of claim 4 and, in addition, wherein the liquid fuel cut-off is a solenoid valve that operates within the carburetor to control liquid fuel flow to the engine and is powered by the electrical power generator, as called for in claim 6 of U.S. Patent No. 10,697,398.

f. Dependent claim 7 by specifically including all the aforementioned elements of claim 6 and, in addition, wherein the switch selectively powers the solenoid valve by controlling electrical connection between the solenoid valve and the electrical power generator, as called for in claim 7 of U.S. Patent No. 10,697,398.

g. Dependent claim 19 by specifically including all the aforementioned elements of claim 1 and, in addition, wherein the liquid fuel cut-off is magnetically actuated to selectively interrupt liquid fuel, as called for in claim 19 of U.S. Patent No. 10,697,398.

h. Dependent claim 20 by specifically including all the aforementioned elements of claim 1 and, in addition, a spring pushing the liquid fuel cut-off to interrupt liquid fuel; and an actuating magnet coupled to the carburetor to selectively pull the liquid fuel cut-off against the spring away from a position interrupting liquid fuel, as called for in claim 20 of U.S. Patent No. 10,697,398.

i. Dependent claim 22 by specifically including all the aforementioned elements of claim 1 and, in addition, wherein the liquid fuel cut-off is

physically attached to an outer surface of the carburetor, as called for in claim 22 of U.S. Patent No. 10,697,398.

j. Independent claim 57 by specifically including a method of assembling a dual fuel engine comprising: providing an engine operable on a gaseous fuel and a liquid fuel; attaching a carburetor to an intake of the engine, the carburetor comprising: a throat to mix gaseous fuel with air and liquid fuel with air, a float bowl, and a fuel passage extending from the float bowl to the throat to provide liquid fuel; coupling a switch to the engine to change operation of the engine between gaseous fuel and liquid fuel; and attaching a liquid fuel cut-off to the carburetor to close the fuel passage upon actuation of the switch from liquid fuel to gaseous fuel, as called for in claim 57 of U.S. Patent No. 10,697,398.

Therefore, the Powermate Model DF3500E generator model listed in Paragraph 37 infringes at least claims 1, 3-7, 19, 20, 22, and 57 of U.S. Patent No. 10,697,398.

**ANSWER:** Denied.

39. Upon information and belief, Generac has been and is now making, using, selling, or offering for sale within the United States, or importing into the United States, the following additional generator model: Powermate Model DF7500E, a multi-fuel portable generator.

**ANSWER:** Generac admits that it has made, used, sold, offered for sale, or imported Powermate Model DF7500E. Otherwise denied.

40. Upon review of the owner's manual of the Powermate Model DF7500E generator shared with the Powermate Model DF3500E generator, review of images and electrical schematics of the Powermate Model DF7500E generator, and comparison of the images and electrical schematics of the Powermate Model DF7500E generator to images and electrical schematics of the Powermate Model DF3500E generator listed in Paragraph 37, it was determined that the Powermate Model DF7500E generator includes all of the elements of at least claims 1, 3-7, 19, 20, 22, and 57 of U.S. Patent No. 10,697,398. The Powermate Model DF7500E generator infringes:

a. Independent claim 1 by specifically including a dual fuel engine comprising: an engine operable on a gaseous fuel and a liquid fuel; a switch to change operation of the engine between gaseous fuel and liquid fuel; a carburetor attached to an intake of the engine to mix air and fuel and connect to a gaseous fuel source and a liquid fuel source; a liquid fuel valve positioned along a liquid fuel line coupling the liquid fuel source to the carburetor; a gaseous fuel valve positioned along a gaseous fuel line coupling the gaseous fuel source to the carburetor; and a liquid fuel cut-off incorporated into the carburetor to interrupt liquid fuel upon actuation of the switch from liquid fuel to gaseous fuel, as called for in claim 1 of U.S. Patent No. 10,697,398.

b. Dependent claim 3 by specifically including all the aforementioned elements of claim 1 and, in addition, wherein the gaseous fuel is LPG and the liquid fuel is gasoline, as called for in claim 3 of U.S. Patent No. 10,697,398.

c. Dependent claim 4 by specifically including all the aforementioned elements of claim 1 and, in addition, wherein the engine is a pull-start engine having an electrical power generator to supply electrical power, as called for in claim 4 of U.S. Patent No. 10,697,398.

d. Dependent claim 5 by specifically including all the aforementioned elements of claim 4 and, in addition, wherein the switch is an electro-mechanical switch connecting one fuel source to the carburetor and connected to the electrical power generator; and wherein the liquid fuel cut-off is a solenoid connected to open and close a fuel path to the pull-start engine in response to reception of electrical power from the switch, as called for in claim 5 of U.S. Patent No. 10,697,398.

e. Dependent claim 6 by specifically including all the aforementioned elements of claim 4 and, in addition, wherein the liquid fuel cut-off is a solenoid valve that operates within the carburetor to control liquid fuel flow to the engine and is powered by the electrical power generator, as called for in claim 6 of U.S. Patent No. 10,697,398.

f. Dependent claim 7 by specifically including all the aforementioned elements of claim 6 and, in addition, wherein the switch selectively powers the solenoid valve by controlling electrical connection between the solenoid valve and the electrical power generator, as called for in claim 7 of U.S. Patent No. 10,697,398.

g. Dependent claim 19 by specifically including all the aforementioned elements of claim 1 and, in addition, wherein the liquid fuel cut-off is magnetically actuated to selectively interrupt liquid fuel, as called for in claim 19 of U.S. Patent No. 10,697,398.

h. Dependent claim 20 by specifically including all the aforementioned elements of claim 1 and, in addition, a spring pushing the liquid fuel cut-off to interrupt liquid fuel; and an actuating magnet coupled to the carburetor to selectively pull the liquid fuel cut-off against the spring away from a position interrupting liquid fuel, as called for in claim 20 of U.S. Patent No. 10,697,398.

i. Dependent claim 22 by specifically including all the aforementioned elements of claim 1 and, in addition, wherein the liquid fuel cut-off is physically attached to an outer surface of the carburetor, as called for in claim 22 of U.S. Patent No. 10,697,398.

j. Independent claim 57 by specifically including a method of assembling a dual fuel engine comprising: providing an engine operable on a gaseous fuel and a liquid fuel; attaching a carburetor to an intake of the engine, the carburetor comprising: a throat to mix gaseous fuel with air and liquid fuel

> with air, a float bowl, and a fuel passage extending from the float bowl to the throat to provide liquid fuel; coupling a switch to the engine to change operation of the engine between gaseous fuel and liquid fuel; and attaching a liquid fuel cut-off to the carburetor to close the fuel passage upon actuation of the switch from liquid fuel to gaseous fuel, as called for in claim 57 of U.S. Patent No. 10,697,398.

Therefore, Powermate Model DF7500E generator listed in Paragraph 39 infringes at least claims 1, 3-7, 19, 20, 22, and 57 of U.S. Patent No. 10,697,398.

**ANSWER:** Denied.

41. Champion has no adequate remedy at law against Generac's acts of infringement and will suffer irreparable harm unless Generac is preliminarily and permanently enjoined from its infringement of U.S. Patent No. 10,697,398.

**ANSWER:** Denied.

42. Upon information and belief, Generac's infringement has been willful, deliberate, and with knowledge of Champion's rights under U.S. Patent No. 10,697,398.

**ANSWER:** Denied.

43. Upon information and belief, at least as of July 7, 2020, and again on April 4, 2024, the dates Champion sent Generac cease and desist letters demanding the cessation of infringement by Generac of Champion's patents, Generac has monitored Champion's patents and published patent applications and had actual notice of all of Champion's patents and published patent applications as of their publication dates.

**ANSWER:** Generac admits that Champion sent Generac letters dated July 7, 2020, and April 4, 2024. To the extent this paragraph implies that the July 7, 2020, and April 4, 2024, letters included a demand to cease infringement of the '398 Patent, Generac denies the same. Otherwise denied.

44. Generac, by way of its infringing activity, has caused and continues to cause Champion to suffer damages in an amount to be determined at trial.

**ANSWER:** Denied.

**COUNT IV: [NON-]INFRINGEMENT OF U.S. PATENT NO. 11,143,120**

45. Paragraphs 1 through 44 are incorporated by reference as if fully set forth herein.

**ANSWER:** No response is required. To the extent a response is required, Generac incorporates its responses to the allegations of paragraphs 1 through 44 as if set forth herein.

46. U.S. Patent No. 11,143,120 is titled "FUEL SYSTEM FOR A MULTI-FUEL INTERNAL COMBUSTION ENGINE." U.S. Patent No. 11,143,120 was duly and legally issued on October 12, 2021. A true and correct copy of U.S. Patent No. 11,143,120 is attached as Exhibit D.

**ANSWER:** Exhibit D speaks for itself. Otherwise denied.

47. Champion is the lawful assignee of the entire right, title, and interest in and to U.S. Patent No. 11,143,120 and possesses all rights of recovery under the patent, including the right to recover damages for past infringement.

**ANSWER:** Generac is without information to admit or deny the allegations of this paragraph and therefore denies the same.

48. Champion has acquired and inspected the following Generac generator models that Generac has been and is making, using, selling, or offering for sale within the United States, or importing into the United States, and that infringe one or more claims of U.S. Patent No. 11,143,120:

a. Powermate Model PM4500DF, a multi-fuel portable generator;

b. Powermate Model PM7500DF, a multi-fuel portable generator; and

c. Generac Model GP7500E, a dual multi-portable generator.

**ANSWER:** Generac admits that it has made, used, sold, offered for sale, or imported Powermate Model PM4500DF, Powermate Model PM7500DF, and Generac Model GP7500E. Generac specifically denies that any such activity infringes U.S. Patent. No. 10,143,120 ("the '120 Patent"). Generac is without information to admit or deny the remaining allegations of this paragraph and therefore denies the same.

49. Upon acquisition, disassembly as needed, review of owner's manuals and electrical schematics, and inspection, it was determined that each of the foregoing Generac generator models includes all of the elements of at least claims 12 and 17 of U.S. Patent No. 11,143,120. Each of the foregoing Generac generator models infringes:

a. Independent claim 12 by specifically including a multi-fuel generator and fuel delivery system having a multi-fuel internal combustion engine configured to operate on a liquid fuel supplied from a liquid fuel source

through a liquid fuel line and a gaseous fuel supplied from a pressurized fuel source through a gaseous fuel line, an alternator driven by the multi-fuel internal combustion engine, and a fuel regulator system including a primary pressure regulator coupled to a service valve of a pressurized fuel source to regulate fuel supplied from the pressurized fuel source to a reduced pressure and a secondary pressure regulator coupled to the primary pressure regulator to regulate fuel supplied from the primary pressure regulator to a desired pressure for delivery through the gaseous fuel line to operate the engine, as called for in claim 12 of U.S. Patent No. 11,143,120.

b. Dependent claim 17 by specifically including all the aforementioned elements of claim 12 and, in addition, wherein a dual stage pressure regulator comprises the primary pressure regulator and the secondary pressure regulator, as called for in claim 17 of U.S. Patent No. 11,143,120.

Therefore, each of the foregoing Generac generator models listed in Paragraph 48(a)-(c) infringes at least claims 12 and 17 of U.S. Patent No. 11,143,120.

**ANSWER:** Denied.

50. Champion has acquired and inspected the following Generac generator models that Generac has been and is making, using, selling, or offering for sale within the United States, or importing into the United States, and that infringe one or more claims of U.S. Patent No. 11,143,120: Powermate Model DF3500E, a multi-fuel portable generator.

**ANSWER:** Generac admits that it has made, used, sold, offered for sale, or imported Powermate Model DF3500E. Generac specifically denies that any such activity infringes the '120 Patent. Generac is without information to admit or deny the remaining allegations of this paragraph and therefore denies the same.

51. Upon acquisition, disassembly as needed, review of owner's manuals and electrical schematics, and inspection, it was determined that the Powermate Model DF3500E generator includes all of the elements of at least claims 12-15, 18, and 19 of U.S. Patent No. 11,143,120. The Powermate Model DF3500E generator infringes:

a. Independent claim 12 by specifically including a multi-fuel generator and fuel delivery system having a multi-fuel internal combustion engine configured to operate on a liquid fuel supplied from a liquid fuel source through a liquid fuel line and a gaseous fuel supplied from a pressurized fuel source through a gaseous fuel line, an alternator driven by the multi-fuel internal combustion engine, and a fuel regulator system including a primary pressure regulator coupled to a service valve of a pressurized fuel source to regulate fuel supplied from the pressurized fuel source to a reduced pressure and a secondary pressure regulator coupled to the primary pressure regulator to regulate fuel supplied from the primary pressure

regulator to a desired pressure for delivery through the gaseous fuel line to operate the engine, as called for in claim 12 of U.S. Patent No. 11,143,120.

b. Dependent claim 13 by specifically including all the aforementioned elements of claim 12 and, in addition, an electro-mechanical valve system coupled to the engine and operated by an electrical switch powered by one of the alternator, a battery, and a magneto that controls fuel flow to the engine from the liquid fuel source and the pressurized fuel source, as called for in claim 13 of U.S. Patent No. 11,143,120.

c. Dependent claim 14 by specifically including all the aforementioned elements of claim 13 and, in addition, wherein the electro-mechanical valve system is configured to switch operation of the generator from multiple fuel sources while the generator is running, as called for in claim 14 of U.S. Patent No. 11,143,120.

d. Dependent claim 15 by specifically including all the aforementioned elements of claim 13 and, in addition, wherein the electro-mechanical valve system is configured to prevent simultaneous delivery of the liquid fuel and the gaseous fuel to the engine, as called for in claim 15 of U.S. Patent No. 11,143,120.

e. Independent claim 18 by specifically including a carburetor for use in a multi-fuel internal combustion engine, the carburetor comprising: a throat in which fuel and air are mixed in throat to provide an air-fuel mixture for the multi-fuel internal combustion engine; a valve located in the throat to provide a choke and throttle for the multi-fuel internal combustion engine; a float bowl to hold liquid fuel; a main fuel circuit positioned downstream from the float bowl and extending from the float bowl to the throat; an idle fuel circuit that provides a flow path to the throat downstream of the throttle to run the engine at idle; and a carburetor cutoff solenoid configured to selectively control fuel flow through the main fuel circuit and the idle fuel circuit, as called for in claim 18 of U.S. Patent No. 11,143,120.

f. Dependent claim 19 by specifically including all the aforementioned elements of claim 18 and, in addition, wherein the carburetor cutoff solenoid is operatively coupled to a switch that changes operation of the engine from liquid fuel to gaseous fuel and from gaseous fuel to liquid fuel while the engine is running, and wherein the carburetor cutoff solenoid is closed to stop liquid fuel flow through the main fuel circuit and the idle fuel circuit when the switch changes operation of the engine from liquid fuel to gaseous fuel, as called for in claim 19 of U.S. Patent No. 11,143,120.

Therefore, the Powermate Model DF3500E generator listed in Paragraph 50 infringes at least claims 12-15, 18, and 19 of U.S. Patent No. 11,143,120.

**ANSWER:** Denied.

52. Upon information and belief, Generac has been and is now making, using, selling, or offering for sale within the United States, or importing into the United States, the following additional generator model: Powermate Model DF7500E, a multi-fuel portable generator.

**ANSWER:** Generac admits that it has made, used, sold, offered for sale, or imported Powermate Model DF7500E. Otherwise denied.

53. Upon review of the owner's manual of the Powermate Model DF7500E generator shared with the Powermate Model DF3500E generator, review of images and electrical schematics of the Powermate Model DF7500E generator, and comparison of the images and electrical schematics of the Powermate Model DF7500E generator to images and electrical schematics of the Powermate Model DF3500E generator listed in Paragraph 50, it was determined that the Powermate Model DF7500E generator includes all of the elements of at least claims 12-15, 18, and 19 of U.S. Patent No. 11,143,120. The Powermate Model DF7500E generator infringes:

a. Independent claim 12 by specifically including a multi-fuel generator and fuel delivery system having a multi-fuel internal combustion engine configured to operate on a liquid fuel supplied from a liquid fuel source through a liquid fuel line and a gaseous fuel supplied from a pressurized fuel source through a gaseous fuel line, an alternator driven by the multi-fuel internal combustion engine, and a fuel regulator system including a primary pressure regulator coupled to a service valve of a pressurized fuel source to regulate fuel supplied from the pressurized fuel source to a reduced pressure and a secondary pressure regulator coupled to the primary pressure regulator to regulate fuel supplied from the primary pressure regulator to a desired pressure for delivery through the gaseous fuel line to operate the engine, as called for in claim 12 of U.S. Patent No. 11,143,120.

b. Dependent claim 13 by specifically including all the aforementioned elements of claim 12 and, in addition, an electro-mechanical valve system coupled to the engine and operated by an electrical switch powered by one of the alternator, a battery, and a magneto that controls fuel flow to the engine from the liquid fuel source and the pressurized fuel source, as called for in claim 13 of U.S. Patent No. 11,143,120.

c. Dependent claim 14 by specifically including all the aforementioned elements of claim 13 and, in addition, wherein the electro-mechanical valve system is configured to switch operation of the generator from multiple fuel sources while the generator is running, as called for in claim 14 of U.S. Patent No. 11,143,120.

d. Dependent claim 15 by specifically including all the aforementioned elements of claim 13 and, in addition, wherein the electro-mechanical valve system is configured to prevent simultaneous delivery of the liquid fuel and the gaseous fuel to the engine, as called for in claim 15 of U.S. Patent No. 11,143,120.

e. Independent claim 18 by specifically including a carburetor for use in a multi-fuel internal combustion engine, the carburetor comprising: a throat in which fuel and air are mixed in throat to provide an air-fuel mixture for the multi-fuel internal combustion engine; a valve located in the throat to provide a choke and throttle for the multi-fuel internal combustion engine; a float bowl to hold liquid fuel; a main fuel circuit positioned downstream from the float bowl and extending from the float bowl to the throat; an idle fuel circuit that provides a flow path to the throat downstream of the throttle to run the engine at idle; and a carburetor cutoff solenoid configured to selectively control fuel flow through the main fuel circuit and the idle fuel circuit, as called for in claim 18 of U.S. Patent No. 11,143,120.

f. Dependent claim 19 by specifically including all the aforementioned elements of claim 18 and, in addition, wherein the carburetor cutoff solenoid is operatively coupled to a switch that changes operation of the engine from liquid fuel to gaseous fuel and from gaseous fuel to liquid fuel while the engine is running, and wherein the carburetor cutoff solenoid is closed to stop liquid fuel flow through the main fuel circuit and the idle fuel circuit when the switch changes operation of the engine from liquid fuel to gaseous fuel, as called for in claim 19 of U.S. Patent No. 11,143,120.

Therefore, the Powermate Model DF7500E generator listed in Paragraph 52 infringes at least claims 12-15, 18, and 19 of U.S. Patent No. 11,143,120.

**ANSWER:** Denied.

54. Champion has no adequate remedy at law against Generac's acts of infringement and will suffer irreparable harm unless Generac is preliminarily and permanently enjoined from its infringement of U.S. Patent No. 11,143,120.

**ANSWER:** Denied.

55. Upon information and belief, Generac's infringement has been willful, deliberate, and with knowledge of Champion's rights under U.S. Patent No. 11,143,120.

**ANSWER:** Denied.

56. Upon information and belief, at least as of July 7, 2020, and again on April 4, 2024, the dates Champion sent Generac cease and desist letters demanding the cessation of infringement by Generac of Champion's patents, Generac has monitored Champion's patents and published patent applications and had actual notice of all of Champion's patents and published patent applications as of their publication dates.

**ANSWER:** Generac admits that Champion sent Generac letters dated July 7, 2020, and April 4, 2024. To the extent this paragraph implies that the July 7, 2020, and April 4, 2024, letters

included a demand to cease infringement of the ’120 Patent, Generac denies the same. Otherwise denied.

57. Generac, by way of its infringing activity, has caused and continues to cause Champion to suffer damages in an amount to be determined at trial.

**ANSWER:** Denied.

**COUNT V: [NON-]INFRINGEMENT OF U.S. PATENT NO. 11,143,145**

58. Paragraphs 1 through 57 are incorporated by reference as if fully set forth herein.

**ANSWER:** No response is required. To the extent a response is required, Generac incorporates its responses to the allegations of paragraphs 1 through 57 as if set forth herein.

59. U.S. Patent No. 11,143,145 is titled “BATTERYLESS DUAL FUEL ENGINE WITH LIQUID FUEL CUT-OFF.” U.S. Patent No. 11,143,145 was duly and legally issued on October 12, 2021. A true and correct copy of U.S. Patent No. 11,143,145 is attached as Exhibit E.

**ANSWER:** Exhibit E speaks for itself. Otherwise denied.

60. Champion is the lawful assignee of the entire right, title, and interest in and to U.S. Patent No. 11,143,145 and possesses all rights of recovery under the patent, including the right to recover damages for past infringement.

**ANSWER:** Generac is without information to admit or deny the allegations of this paragraph and therefore denies the same.

61. Champion has acquired and inspected the following Generac generator models that Generac has been and is making, using, selling, or offering for sale within the United States, or importing into the United States:

a. Powermate Model PM4500DF, a multi-fuel portable generator;

b. Powermate Model PM7500DF, a multi-fuel portable generator; and

c. Generac Model GP7500E, a multi-fuel portable generator.

**ANSWER:** Generac admits that it has made, used, sold, offered for sale, or imported Powermate Model PM4500DF, Powermate Model PM7500DF, and Generac Model GP7500E. Generac is without information to admit or deny the remaining allegations of this paragraph and therefore denies the same.

62. Upon acquisition, disassembly as needed, review of owner's manuals and electrical schematics, and inspection, it was determined that each of the foregoing Generac generator models includes all of the elements of at least claims 11, 13, and 14 of U.S. Patent No. 11,143,145. Each of the foregoing Generac generator models infringes:

a. Independent claim 11 by specifically including a dual fuel generator comprising: an engine operable on a gaseous fuel and a liquid fuel; a carburetor attached to an intake of the engine to mix air and fuel and connect to a gaseous fuel source and a liquid fuel source; and a manually actuated fuel shutoff coupled to the carburetor, the manually actuated fuel shutoff comprising: a first end in the carburetor that actuates to selectively allow or block a flow of fuel through the carburetor; and a second end external to the carburetor to actuate the first end, as called for in claim 11 of U.S. Patent No. 11,143,145.

b. Dependent claim 13 by specifically including all the aforementioned elements of claim 11 and, in addition, wherein the gaseous fuel is LPG and the liquid fuel is gasoline, as called for in claim 13 of U.S. Patent No. 11,143,145.

c. Dependent claim 14 by specifically including all the aforementioned elements of claim 11 and, in addition, wherein the manually actuated fuel shutoff comprises a rotating mechanical valve, as called for in claim 14 of U.S. Patent No. 11,143,145.

Therefore, each of the foregoing Generac generator models listed in Paragraph 61(a)-(c) infringes at least claims 11, 13, and 14 of U.S. Patent No. 11,143,145.

**ANSWER:** Denied.

63. Champion has acquired and inspected the following Generac generator models that Generac has been and is making, using, selling, or offering for sale within the United States, or importing into the United States, and that infringe one or more claims of U.S. Patent No. 11,143,145: Powermate Model DF3500E, a multi-fuel portable generator.

**ANSWER:** Generac admits that it has made, used, sold, offered for sale, or imported Powermate Model DF3500DE. Generac specifically denies that any such activity infringes U.S. Patent. No. 10,143,145 ("the '145 Patent"). Generac is without information to admit or deny the remaining allegations of this paragraph and therefore denies the same.

64. Upon acquisition, disassembly as needed, review of owner's manuals and electrical schematics, and inspection, it was determined that the Powermate Model DF3500E generator includes all of the elements of at least claims 1-7 and 10 of U.S. Patent No. 11,143,145. The Powermate Model DF3500E generator infringes:

a. Independent claim 1 by specifically including a dual fuel generator comprising: an engine operable on a gaseous fuel and a liquid fuel; an electrical power generator driven by the engine and comprising a charging coil; a switch to change operation of the engine between gaseous fuel and liquid fuel; a carburetor attached to an intake of the engine to mix air and fuel and connect to a gaseous fuel source and a liquid fuel source; a liquid fuel cut-off solenoid to interrupt liquid fuel flow to the engine upon actuation of the switch from liquid fuel to gaseous fuel; and a voltage regulator coupled to the charging coil to receive power therefrom and that operates to provide a regulated voltage to the liquid fuel cut-off solenoid, as called for in claim 1 of U.S. Patent No. 11,143,145.

b. Dependent claim 2 by specifically including all the aforementioned elements of claim 1 and, in addition, a liquid fuel valve along a liquid fuel line coupling the liquid fuel source to the carburetor; and a gaseous fuel valve along a gaseous fuel line coupling the gaseous fuel source to the carburetor, as called for in claim 2 of U.S. Patent No. 11,143,145.

c. Dependent claim 3 by specifically including all the aforementioned elements of claim 2 and, in addition, wherein each of the liquid fuel valve and the gaseous fuel valve comprises a mechanical valve, as called for in claim 3 of U.S. Patent No. 11,143,145.

d. Dependent claim 4 by specifically including all the aforementioned elements of claim 2 and, in addition, wherein the liquid fuel cut-off solenoid is attached to the carburetor, as called for in claim 4 of U.S. Patent No. 11,143,145.

e. Dependent claim 5 by specifically including all the aforementioned elements of claim 1 and, in addition, wherein the gaseous fuel is LPG and the liquid fuel is gasoline, as called for in claim 5 of U.S. Patent No. 11,143,145.

f. Dependent claim 6 by specifically including all the aforementioned elements of claim 1 and, in addition, wherein the switch is an electro-mechanical switch connecting one fuel source to the carburetor and connected to the electrical power generator, and wherein the liquid fuel cut-off solenoid is connected to open and close a fuel path to the engine in response to reception of electrical power from the switch, as called for in claim 6 of U.S. Patent No. 11,143,145.

g. Dependent claim 7 by specifically including all the aforementioned elements of claim 6 and, in addition, wherein the switch selectively powers the solenoid valve by controlling electrical connection between the solenoid valve and the electrical power generator, as called for in claim 7 of U.S. Patent No. 11,143,145.

h. Dependent claim 10 by specifically including all the aforementioned elements of claim 1 and, in addition, wherein the electrical power generator

comprises a magneto or an alternator, as called for in claim 10 of U.S. Patent No. 11,143,145.

Therefore, Powermate Model DF3500E generator listed in Paragraph 64 infringes at least claims 1-7 and 10 of U.S. Patent No. 11,143,145.

**ANSWER:** Denied.

65. Upon information and belief, Generac has been and is now making, using, selling, or offering for sale within the United States, or importing into the United States, the following additional generator model: Powermate Model DF7500E, a multi-fuel portable generator.

**ANSWER:** Generac admits that it has made, used, sold, offered for sale, or imported Powermate Model DF7500E. Otherwise denied.

66. Upon review of the owner's manual of the Powermate Model DF7500E generator shared with the Powermate Model DF3500E generator, review of images and electrical schematics of the Powermate Model DF7500E generator, and comparison of the images and electrical schematics of the Powermate Model DF7500E generator to images and electrical schematics of the Powermate Model DF3500E generator listed in Paragraph 64, it was determined that the Powermate Model DF7500E generator includes all of the elements of at least claims 1-7 and 10 of U.S. Patent No. 11,143,145. The Powermate Model DF7500E generator infringes:

a. Independent claim 1 by specifically including a dual fuel generator comprising: an engine operable on a gaseous fuel and a liquid fuel; an electrical power generator driven by the engine and comprising a charging coil; a switch to change operation of the engine between gaseous fuel and liquid fuel; a carburetor attached to an intake of the engine to mix air and fuel and connect to a gaseous fuel source and a liquid fuel source; a liquid fuel cut-off solenoid to interrupt liquid fuel flow to the engine upon actuation of the switch from liquid fuel to gaseous fuel; and a voltage regulator coupled to the charging coil to receive power therefrom and that operates to provide a regulated voltage to the liquid fuel cut-off solenoid, as called for in claim 1 of U.S. Patent No. 11,143,145.

b. Dependent claim 2 by specifically including all the aforementioned elements of claim 1 and, in addition, a liquid fuel valve along a liquid fuel line coupling the liquid fuel source to the carburetor; and a gaseous fuel valve along a gaseous fuel line coupling the gaseous fuel source to the carburetor, as called for in claim 2 of U.S. Patent No. 11,143,145.

c. Dependent claim 3 by specifically including all the aforementioned elements of claim 2 and, in addition, wherein each of the liquid fuel valve and the gaseous fuel valve comprises a mechanical valve, as called for in claim 3 of U.S. Patent No. 11,143,145.

d. Dependent claim 4 by specifically including all the aforementioned elements of claim 2 and, in addition, wherein the liquid fuel cut-off solenoid

is attached to the carburetor, as called for in claim 4 of U.S. Patent No. 11,143,145.

e. Dependent claim 5 by specifically including all the aforementioned elements of claim 1 and, in addition, wherein the gaseous fuel is LPG and the liquid fuel is gasoline, as called for in claim 5 of U.S. Patent No. 11,143,145.

f. Dependent claim 6 by specifically including all the aforementioned elements of claim 1 and, in addition, wherein the switch is an electro-mechanical switch connecting one fuel source to the carburetor and connected to the electrical power generator, and wherein the liquid fuel cut-off solenoid is connected to open and close a fuel path to the engine in response to reception of electrical power from the switch, as called for in claim 6 of U.S. Patent No. 11,143,145.

g. Dependent claim 7 by specifically including all the aforementioned elements of claim 6 and, in addition, wherein the switch selectively powers the solenoid valve by controlling electrical connection between the solenoid valve and the electrical power generator, as called for in claim 7 of U.S. Patent No. 11,143,145.

h. Dependent claim 10 by specifically including all the aforementioned elements of claim 1 and, in addition, wherein the electrical power generator comprises a magneto or an alternator, as called for in claim 10 of U.S. Patent No. 11,143,145.

Therefore, the Powermate Model DF7500E generator listed in Paragraph 65 infringes at least claims 1-7 and 10 of U.S. Patent No. 11,143,145.

**ANSWER:** Denied.

67. Champion has no adequate remedy at law against Generac's acts of infringement and will suffer irreparable harm unless Generac is preliminarily and permanently enjoined from its infringement of U.S. Patent No. 11,143,145.

**ANSWER:** Denied.

68. Upon information and belief, Generac's infringement has been willful, deliberate, and with knowledge of Champion's rights under U.S. Patent No. 11,143,145.

**ANSWER:** Denied.

69. Upon information and belief, at least as of July 7, 2020, and again on April 4, 2024, the dates Champion sent Generac cease and desist letters demanding the cessation of infringement by Generac of Champion's patents, Generac has monitored Champion's patents and published patent applications and had actual notice of all of Champion's patents and published patent applications as of their publication dates.

**ANSWER:** Generac admits that Champion sent Generac letters dated July 7, 2020, and April 4, 2024. To the extent this paragraph implies that the July 7, 2020, and April 4, 2024, letters included a demand to cease infringement of the '145 Patent, Generac denies the same. Otherwise denied.

70. Generac, by way of its infringing activity, has caused and continues to cause Champion to suffer damages in an amount to be determined at trial.

**ANSWER:** Denied.

**COUNT VI: [NON-]INFRINGEMENT OF U.S. PATENT NO. 11,306,667**

71. Paragraphs 1 through 70 are incorporated by reference as if fully set forth herein.

**ANSWER:** No response is required. To the extent a response is required, Generac incorporates its responses to the allegations of paragraphs 1 through 70 as if set forth herein.

72. U.S. Patent No. 11,306,667 is titled "DUAL FUEL SELECTOR SWITCH." U.S. Patent No. 11,306,667 was duly and legally issued on April 19, 2022. A true and correct copy of U.S. Patent No. 11,306,667 is attached as Exhibit F.

**ANSWER:** Exhibit F speaks for itself. Otherwise denied.

73. Champion is the lawful assignee of the entire right, title, and interest in and to U.S. Patent No. 11,306,667 and possesses all rights of recovery under the patent, including the right to recover damages for past infringement.

**ANSWER:** Generac is without information to admit or deny the allegations of this paragraph and therefore denies the same.

74. Champion has acquired and inspected the following Generac generator models that Generac has been and is making, using, selling, or offering for sale within the United States, or importing into the United States, and that infringe one or more claims of U.S. Patent No. 11,306,667:

a. Powermate Model PM4500DF, a multi-fuel portable generator;

b. Powermate Model PM7500DF, a multi-fuel portable generator; and

c. Generac Model GP7500E, a multi-fuel portable generator.

**ANSWER:** Generac admits that it has made, used, sold, offered for sale, or imported Powermate Model PM4500DF, Powermate Model PM7500DF, and Generac Model GP7500E.

Generac specifically denies that any such activity infringes U.S. Patent. No. 11,306,667 ("the '667 Patent"). Generac is without information to admit or deny the remaining allegations of this paragraph and therefore denies the same.

75. Upon acquisition, disassembly as needed, review of owner's manuals and electrical schematics, and inspection, it was determined that each of the foregoing Generac generator models includes all of the elements of at least claims 1-5 and 9 of U.S. Patent No. 11,306,667. Each of the foregoing Generac generator models infringes:

a. Independent claim 1 by specifically including a fuel selector for use with a dual fuel generator, the fuel selector a selector having a valve assembly fluidly connected to each of a first fuel source and a second fuel source, being operable to selectively control a first fuel flow and a second fuel flow from the first fuel source and the second fuel source, respectively, to an engine of the dual fuel generator, and including two fuel inputs, with a first fuel input connected to the first fuel source and a second fuel input connected to the second fuel source, and two fuel outputs for selectively supplying fuel to an engine from the first fuel source or the second fuel source; and a selector switch positioned on the valve assembly to allow a user to manually select one of the first fuel flow and the second fuel flow, as called for in claim 1 of U.S. Patent No. 11,306,667.

b. Dependent claim 2 by specifically including all the aforementioned elements of claim 1 and, in addition, the two fuel outputs selectively supply fuel to the engine from only one of the first fuel source or the second fuel source, responsive to selection of the first fuel flow or the second fuel flow via the selector switch, and a corresponding operation of the valve assembly, as called for in claim 2 of U.S. Patent No. 11,306,667.

c. Dependent claim 3 by specifically including all the aforementioned elements of claim 1 and, in addition, the valve assembly has a first fuel valve having open and closed positions to selectively control the first fuel flow to the engine and a second fuel valve having open and closed positions to selectively control the second fuel flow to the engine, as called for in claim 3 of U.S. Patent No. 11,306,667.

d. Dependent claim 5 by specifically including all the aforementioned elements of claim 3 and, in addition, wherein the selector switch provides for manual actuation of the first fuel valve and the second fuel valve between the open and closed positions, as called for in claim 5 of U.S. Patent No. 11,306,667.

e. Dependent claim 9 by specifically including all the aforementioned elements of claim 1 and, in addition, the first fuel source is an LPG fuel source and wherein the second fuel source is a gasoline source, as called for in claim 9 of U.S. Patent No. 11,306,667.

Therefore, each of the foregoing Generac generator models listed in Paragraph 74(a)-(c) infringes at least claims 1-5 and 9 of U.S. Patent No. 11,306,667.

**ANSWER:** Denied.

76. Champion has acquired and inspected the following Generac generator models that Generac has been and is making, using, selling, or offering for sale within the United States, or importing into the United States, and that infringe one or more claims of U.S. Patent No. 11,143,145: Powermate Model DF3500E, a multi-fuel portable generator.

**ANSWER:** Generac admits that it has made, used, sold, offered for sale, or imported Powermate Model DF3500E. Generac specifically denies that any such activity infringes the '145 or '667 Patents. Generac is without information to admit or deny the remaining allegations of this paragraph and therefore denies the same.

77. Upon acquisition, disassembly as needed, review of owner's manuals and electrical schematics, and inspection, it was determined that the Powermate Model DF3500E generator includes all of the elements of at least claims 1-9 of U.S. Patent No. 11,306,667. The Powermate Model DF3500E generator infringes:

a. Independent claim 1 by specifically including a fuel selector for use with a dual fuel generator, the fuel selector a selector having a valve assembly fluidly connected to each of a first fuel source and a second fuel source, being operable to selectively control a first fuel flow and a second fuel flow from the first fuel source and the second fuel source, respectively, to an engine of the dual fuel generator, and including two fuel inputs, with a first fuel input connected to the first fuel source and a second fuel input connected to the second fuel source, and two fuel outputs for selectively supplying fuel to an engine from the first fuel source or the second fuel source; and a selector switch positioned on the valve assembly to allow a user to manually select one of the first fuel flow and the second fuel flow, as called for in claim 1 of U.S. Patent No. 11,306,667.

b. Dependent claim 2 by specifically including all the aforementioned elements of claim 1 and, in addition, the two fuel outputs selectively supply fuel to the engine from only one of the first fuel source or the second fuel source, responsive to selection of the first fuel flow or the second fuel flow via the selector switch, and a corresponding operation of the valve assembly, as called for in claim 2 of U.S. Patent No. 11,306,667.

c. Dependent claim 3 by specifically including all the aforementioned elements of claim 1 and, in addition, the valve assembly has a first fuel valve having open and closed positions to selectively control the first fuel flow to the engine and a second fuel valve having open and closed positions to

selectively control the second fuel flow to the engine, as called for in claim 3 of U.S. Patent No. 11,306,667.

d. Dependent claim 5 by specifically including all the aforementioned elements of claim 3 and, in addition, wherein the selector switch provides for manual actuation of the first fuel valve and the second fuel valve between the open and closed positions, as called for in claim 5 of U.S. Patent No. 11,306,667.

e. Dependent claim 6 by specifically including all the aforementioned elements of claim 1 and, in addition, a carburetor solenoid switch configured to activate an associated carburetor solenoid when actuated, as called for in claim 6 of U.S. Patent No. 11,306,667.

f. Dependent claim 7 by specifically including all the aforementioned elements of claim 6 and, in addition, wherein, when the selector switch is in a first position, the selector switch actuates the carburetor solenoid switch, so as to activate the carburetor solenoid and stop the second fuel flow to the engine, as called for in claim 7 of U.S. Patent No. 11,306,667.

g. Dependent claim 8 by specifically including all the aforementioned elements of claim 7 and, in addition, wherein, when the selector switch is in a second position, the carburetor solenoid allows the second fuel flow to the engine, as called for in claim 8 of U.S. Patent No. 11,306,667.

h. Dependent claim 9 by specifically including all the aforementioned elements of claim 1 and, in addition, the first fuel source is an LPG fuel source and wherein the second fuel source is a gasoline source, as called for in claim 9 of U.S. Patent No. 11,306,667.

Therefore, the Powermate Model DF3500E generator listed in Paragraph 76 infringes at least claims 1-9 of U.S. Patent No. 11,306,667.

**ANSWER:** Denied.

78. Upon information and belief, Generac has been and is now making, using, selling, or offering for sale within the United States, or importing into the United States, the following additional generator model: Powermate Model DF7500E, a multi-fuel portable generator.

**ANSWER:** Generac admits that it has made, used, sold, offered for sale, or imported Powermate Model DF7500E. Otherwise denied.

79. Upon review of the owner's manual of the Powermate Model DF7500E generator shared with the Powermate Model DF3500E generator, review of images and electrical schematics of the Powermate Model DF7500E generator, and comparison of the images and electrical schematics of the Powermate Model DF7500E generator to images and electrical schematics of the Powermate Model DF3500E generator listed in Paragraph 76, it was determined that the Powermate Model DF7500E generator includes all of the elements of at least claims 1-9 of U.S. Patent No. 11,306,667. The Powermate Model DF7500E generator infringes:

a. Independent claim 1 by specifically including a fuel selector for use with a dual fuel generator, the fuel selector a selector having a valve assembly fluidly connected to each of a first fuel source and a second fuel source, being operable to selectively control a first fuel flow and a second fuel flow from the first fuel source and the second fuel source, respectively, to an engine of the dual fuel generator, and including two fuel inputs, with a first fuel input connected to the first fuel source and a second fuel input connected to the second fuel source, and two fuel outputs for selectively supplying fuel to an engine from the first fuel source or the second fuel source; and a selector switch positioned on the valve assembly to allow a user to manually select one of the first fuel flow and the second fuel flow, as called for in claim 1 of U.S. Patent No. 11,306,667.

b. Dependent claim 2 by specifically including all the aforementioned elements of claim 1 and, in addition, the two fuel outputs selectively supply fuel to the engine from only one of the first fuel source or the second fuel source, responsive to selection of the first fuel flow or the second fuel flow via the selector switch, and a corresponding operation of the valve assembly, as called for in claim 2 of U.S. Patent No. 11,306,667.

c. Dependent claim 3 by specifically including all the aforementioned elements of claim 1 and, in addition, the valve assembly has a first fuel valve having open and closed positions to selectively control the first fuel flow to the engine and a second fuel valve having open and closed positions to selectively control the second fuel flow to the engine, as called for in claim 3 of U.S. Patent No. 11,306,667.

d. Dependent claim 5 by specifically including all the aforementioned elements of claim 3 and, in addition, wherein the selector switch provides for manual actuation of the first fuel valve and the second fuel valve between the open and closed positions, as called for in claim 5 of U.S. Patent No. 11,306,667.

e. Dependent claim 6 by specifically including all the aforementioned elements of claim 1 and, in addition, a carburetor solenoid switch configured to activate an associated carburetor solenoid when actuated, as called for in claim 6 of U.S. Patent No. 11,306,667.

f. Dependent claim 7 by specifically including all the aforementioned elements of claim 6 and, in addition, wherein, when the selector switch is in a first position, the selector switch actuates the carburetor solenoid switch, so as to activate the carburetor solenoid and stop the second fuel flow to the engine, as called for in claim 7 of U.S. Patent No. 11,306,667.

g. Dependent claim 8 by specifically including all the aforementioned elements of claim 7 and, in addition, wherein, when the selector switch is in a second position, the carburetor solenoid allows the second fuel flow to the engine, as called for in claim 8 of U.S. Patent No. 11,306,667.

h. Dependent claim 9 by specifically including all the aforementioned elements of claim 1 and, in addition, the first fuel source is an LPG fuel source and wherein the second fuel source is a gasoline source, as called for in claim 9 of U.S. Patent No. 11,306,667.

Therefore, the Powermate Model DF7500E generator listed in Paragraph 78 infringes at least claims 1-9 of U.S. Patent No. 11,306,667.

**ANSWER:** Denied.

80. Champion has no adequate remedy at law against Generac's acts of infringement and will suffer irreparable harm unless Generac is preliminarily and permanently enjoined from its infringement of U.S. Patent No. 11,306,667.

**ANSWER:** Denied.

81. Upon information and belief, Generac's infringement has been willful, deliberate, and with knowledge of Champion's rights under U.S. Patent No. 11,306,667.

**ANSWER:** Denied.

82. Upon information and belief, at least as of July 7, 2020, and again on April 4, 2024, the dates Champion sent Generac cease and desist letters demanding the cessation of infringement by Generac of Champion's patents, Generac has monitored Champion's patents and published patent applications and had actual notice of all of Champion's patents and published patent applications as of their publication dates.

**ANSWER:** Generac admits that Champion sent Generac letters dated July 7, 2020, and April 4, 2024. To the extent this paragraph implies that the July 7, 2020, and April 4, 2024, letters included a demand to cease infringement of the '667 Patent, Generac denies the same. Otherwise denied.

83. Generac, by way of its infringing activity, has caused and continues to cause Champion to suffer damages in an amount to be determined at trial.

**ANSWER:** Denied.

**COUNT VII: [NON-]INFRINGEMENT OF U.S. PATENT NO. 11,492,985**

84. Paragraphs 1 through 83 are incorporated by reference as if fully set forth herein.

**ANSWER:** No response is required. To the extent a response is required, Generac incorporates its responses to the allegations of paragraphs 1 through 83 as if set forth herein.

85. U.S. Patent No. 11,492,985 is titled "OFF-BOARD FUEL REGULATOR FOR GENERATOR ENGINE." U.S. Patent No. 11,492,985 was duly and legally issued on November 8, 2022. A true and correct copy of U.S. Patent No. 11,492,985 is attached as Exhibit G.

**ANSWER:** Exhibit G speaks for itself. Otherwise denied.

86. Champion is the lawful assignee of the entire right, title, and interest in and to U.S. Patent No. 11,492,985 and possesses all rights of recovery under the patent, including the right to recover damages for past infringement.

**ANSWER:** Generac is without information to admit or deny the allegations of this paragraph and therefore denies the same.

87. Champion has acquired and inspected the following Generac generator models that Generac has been and is making, using, selling, or offering for sale within the United States, or importing into the United States, and that infringe one or more claims of U.S. Patent No. 11,492,985:

a. Powermate Model PM4500DF, a multi-fuel portable generator;

b. Powermate Model PM7500DF, a multi-fuel portable generator;

c. Generac Model GP7500E, a multi-fuel portable generator; and

d. Powermate Model DF3500E, a multi-fuel portable generator.

**ANSWER:** Generac admits that it has made, used, sold, offered for sale, or imported Powermate Model PM4500DF, Powermate Model PM7500DF, Generac Model GP7500E, and Powermate Model DF3500E. Generac specifically denies that any such activity infringes U.S. Patent. No. 11,492,985 ("the '985 Patent"). Generac is without information to admit or deny the remaining allegations of this paragraph and therefore denies the same.

88. Upon acquisition, disassembly as needed, review of owner's manuals and electrical schematics, and inspection, it was determined that each of the foregoing Generac generator models includes all of the elements of at least claims 16 and 17 of U.S. Patent No. 11,492,985. Each of the foregoing Generac generator models infringes:

a. Independent claim 16 by specifically including a dual fuel generator and fuel delivery system having a dual fuel generator configured to operate on a liquid fuel supplied from a liquid fuel source through a liquid fuel line and a gaseous fuel supplied from a pressurized fuel source through a gaseous fuel line; and a fuel regulator system located off board a dual fuel generator, including a primary pressure regulator coupled to a service valve of a pressurized fuel source, configured to regulate the gaseous fuel supplied

from the pressurized fuel source in the first stage, the gaseous fuel regulated down to a first reduced pressure in the first stage and regulate the gaseous fuel output from the first stage in the second stage, the first reduced pressure gaseous fuel from the first stage being regulated down to a second reduced pressure in the second stage for delivery through the gaseous fuel line to operate the generator, wherein the fuel regulator system outputs gaseous fuel to the generator for operation of the engine at the second reduced pressure, as called for in claim 16 of U.S. Patent No. 11,492,985.

b. Dependent claim 17 by specifically including all the aforementioned elements of claim 16 and, in addition, wherein the primary and secondary pressure regulators are integral components of a dual stage pressure regulator, as called for in claim 17 of U.S. Patent No. 11,492,985.

Therefore, each of the foregoing Generac generator models listed in Paragraph 87(a)-(d) infringes at least claims 16 and 17 of U.S. Patent No. 11,492,985.

**ANSWER:** Denied.

89. Upon information and belief, Generac has been and is now making, using, selling, or offering for sale within the United States, or importing into the United States, the following additional generator model: Powermate Model DF7500E, a multi-fuel portable generator.

**ANSWER:** Generac admits that it has made, used, sold, offered for sale, or imported Powermate Model DF7500E. Otherwise denied.

90. Upon review of the owner's manual of the Powermate Model DF7500E generator shared with the Powermate Model DF3500E generator, review of images and electrical schematics of the Powermate Model DF7500E generator, and comparison of the images and electrical schematics of the Powermate Model DF7500E generator to images and electrical schematics of the Powermate Model DF3500E generator listed in Paragraph 87(d), it was determined that the Powermate Model DF7500E generator includes all of the elements of at least claims 16 and 17 of U.S. Patent No. 11,492,985. The Powermate Model DF7500E generator infringes:

a. Independent claim 16 by specifically including a dual fuel generator and fuel delivery system having a dual fuel generator configured to operate on a liquid fuel supplied from a liquid fuel source through a liquid fuel line and a gaseous fuel supplied from a pressurized fuel source through a gaseous fuel line; and a fuel regulator system located off board a dual fuel generator, including a primary pressure regulator coupled to a service valve of a pressurized fuel source, configured to regulate the gaseous fuel supplied from the pressurized fuel source in the first stage, the gaseous fuel regulated down to a first reduced pressure in the first stage and regulate the gaseous fuel output from the first stage in the second stage, the first reduced pressure gaseous fuel from the first stage being regulated down to a second reduced pressure in the second stage for delivery through the gaseous fuel line to operate the generator, wherein the fuel regulator system outputs gaseous

fuel to the generator for operation of the engine at the second reduced pressure, as called for in claim 16 of U.S. Patent No. 11,492,985.

b. Dependent claim 17 by specifically including all the aforementioned elements of claim 16 and, in addition, wherein the primary and secondary pressure regulators are integral components of a dual stage pressure regulator, as called for in claim 17 of U.S. Patent No. 11,492,985.

Therefore, the Powermate Model DF7500E generator listed in Paragraph 89 infringes at least claims 16 and 17 of U.S. Patent No. 11,492,985.

**ANSWER:** Denied.

91. Champion has no adequate remedy at law against Generac's acts of infringement and will suffer irreparable harm unless Generac is preliminarily and permanently enjoined from its infringement of U.S. Patent No. 11,492,985.

**ANSWER:** Denied.

92. Upon information and belief, Generac's infringement has been willful, deliberate, and with knowledge of Champion's rights under U.S. Patent No. 11,492,985.

**ANSWER:** Denied.

93. Upon information and belief, at least as of July 7, 2020, and again on April 4, 2024, the dates Champion sent Generac cease and desist letters demanding the cessation of infringement by Generac of Champion's patents, Generac has monitored Champion's patents and published patent applications and had actual notice of all of Champion's patents and published patent applications as of their publication dates.

**ANSWER:** Generac admits that Champion sent Generac letters dated July 7, 2020, and April 4, 2024. To the extent this paragraph implies that the July 7, 2020, and April 4, 2024, letters included a demand to cease infringement of the '985 Patent, Generac denies the same. Otherwise denied.

94. Generac, by way of its infringing activity, has caused and continues to cause Champion to suffer damages in an amount to be determined at trial.

**ANSWER:** Denied.

**COUNT VIII: [NON-]INFRINGEMENT OF U.S. PATENT NO. 11,530,654**

95. Paragraphs 1 through 94 are incorporated by reference as if fully set forth herein.

**ANSWER:** No response is required. To the extent a response is required, Generac incorporates its responses to the allegations of paragraphs 1 through 94 as if set forth herein.

96. U.S. Patent No. 11,530,654 is titled "OFF-BOARD FUEL REGULATOR FOR GENERATOR ENGINE." U.S. Patent No. 11,530,654 was duly and legally issued on December 20, 2022. A true and correct copy of U.S. Patent No. 11,530,654 is attached as Exhibit H.

**ANSWER:** Exhibit H speaks for itself. Otherwise denied.

97. Champion is the lawful assignee of the entire right, title, and interest in and to U.S. Patent No. 11,530,654 and possesses all rights of recovery under the patent, including the right to recover damages for past infringement.

**ANSWER:** Generac is without information to admit or deny the allegations of this paragraph and therefore denies the same.

98. Champion has acquired and inspected the following Generac generator models that Generac has been and is making, using, selling, or offering for sale within the United States, or importing into the United States, and that infringe one or more claims of U.S. Patent No. 11,530,654:

a. Powermate Model PM4500DF, a multi-fuel portable generator;

b. Powermate Model PM7500DF, a multi-fuel portable generator;

c. Generac Model GP7500E, a multi-fuel portable generator; and

d. Powermate Model DF3500E, a multi-fuel portable generator.

**ANSWER:** Generac admits that it has made, used, sold, offered for sale, or imported Powermate Model PM4500DF, Powermate Model PM7500DF, Generac Model GP7500E, and Powermate Model DF3500E. Generac specifically denies that any such activity infringes U.S. Patent. No. 11,530,654 ("the '654 Patent"). Generac is without information to admit or deny the remaining allegations of this paragraph and therefore denies the same.

99. Upon acquisition, disassembly as needed, review of owner's manuals and electrical schematics, and inspection, it was determined that each of the foregoing Generac generator models includes all of the elements of at least claims 6, 7, and 9 of U.S. Patent No. 11,530,654. Each of the foregoing Generac generator models infringes:

a. Independent claim 6 by specifically including a dual fuel generator and fuel delivery system having a dual fuel generator configured to operate on a liquid fuel supplied from a liquid fuel source through a liquid fuel line and

a gaseous fuel supplied from a pressurized fuel source through a gaseous fuel line, a fuel regulator system located off board the dual fuel generator and having a primary pressure regulator coupled to a service valve of a pressurized fuel source and configured to regulate a gaseous fuel supplied from the pressurized fuel source to a first reduced pressure and a secondary pressure regulator coupled to the primary pressure regulator and configured to regulate the gaseous fuel supplied from the primary pressure regulator down from the first reduced pressure to a second reduced pressure for delivery through a gaseous fuel line to operate the dual fuel generator, a mechanical fuel valve actuatable between a first position and a second position to selectively control fuel flow to the dual fuel generator from a liquid fuel source through a liquid fuel line and the pressurized fuel source through the gaseous fuel line and that opens and closes the liquid fuel line to selectively control fuel flow from the liquid fuel source to the dual fuel generator, and a fuel lockout apparatus coupled to the mechanical fuel valve and configured to prevent the pressurized fuel source from coupling to the gaseous fuel line while the mechanical fuel valve opens the liquid fuel line and permit the pressurized fuel source to couple to the gaseous fuel line while the mechanical fuel valve closes the liquid fuel line, as called for in claim 6 of U.S. Patent No. 11,530,654.

b. Dependent claim 7 by specifically including all the aforementioned elements of claim 6 and, in addition, the fuel lockout apparatus is further configured to prevent the mechanical fuel valve from opening the liquid fuel line while the dual fuel generator receives fuel from the pressurized fuel source, as called for in claim 7 of U.S. Patent No. 11,530,654.

c. Dependent claim 9 by specifically including all the aforementioned elements of claim 6 and, in addition, wherein the primary and secondary pressure regulators are integral components of a dual stage pressure regulator, as called for in claim 7 of U.S. Patent No. 11,530,654.

Therefore, each of the foregoing Generac generator models listed in Paragraph 98(a)-(d) infringes at least claims 6, 7, and 9 of U.S. Patent No. 11,530,654.

**ANSWER:** Denied.

100. Upon information and belief, Generac has been and is now making, using, selling, or offering for sale within the United States, or importing into the United States, the following additional generator model: Powermate Model DF7500E, a multi-fuel portable generator.

**ANSWER:** Generac admits that it has made, used, sold, offered for sale, or imported Powermate Model DF7500E. Otherwise denied.

101. Upon review of the owner's manual of the Powermate Model DF7500E generator shared with the Powermate Model DF3500E generator, review of images and electrical schematics of the Powermate Model DF7500E generator, and comparison of the images and electrical

schematics of the Powermate Model DF7500E generator to images and electrical schematics of the Powermate Model DF3500E generator listed in Paragraph 98(d), it was determined that the Powermate Model DF7500E generator includes all of the elements of at least claims 6, 7, and 9 of U.S. Patent No. 11,530,654. The Powermate Model DF7500E generator infringes:

a. Independent claim 6 by specifically including a dual fuel generator and fuel delivery system having a dual fuel generator configured to operate on a liquid fuel supplied from a liquid fuel source through a liquid fuel line and a gaseous fuel supplied from a pressurized fuel source through a gaseous fuel line, a fuel regulator system located off board the dual fuel generator and having a primary pressure regulator coupled to a service valve of a pressurized fuel source and configured to regulate a gaseous fuel supplied from the pressurized fuel source to a first reduced pressure and a secondary pressure regulator coupled to the primary pressure regulator and configured to regulate the gaseous fuel supplied from the primary pressure regulator down from the first reduced pressure to a second reduced pressure for delivery through a gaseous fuel line to operate the dual fuel generator, a mechanical fuel valve actuatable between a first position and a second position to selectively control fuel flow to the dual fuel generator from a liquid fuel source through a liquid fuel line and the pressurized fuel source through the gaseous fuel line and that opens and closes the liquid fuel line to selectively control fuel flow from the liquid fuel source to the dual fuel generator, and a fuel lockout apparatus coupled to the mechanical fuel valve and configured to prevent the pressurized fuel source from coupling to the gaseous fuel line while the mechanical fuel valve opens the liquid fuel line and permit the pressurized fuel source to couple to the gaseous fuel line while the mechanical fuel valve closes the liquid fuel line, as called for in claim 6 of U.S. Patent No. 11,530,654.

b. Dependent claim 7 by specifically including all the aforementioned elements of claim 6 and, in addition, the fuel lockout apparatus is further configured to prevent the mechanical fuel valve from opening the liquid fuel line while the dual fuel generator receives fuel from the pressurized fuel source, as called for in claim 7 of U.S. Patent No. 11,530,654.

c. Dependent claim 9 by specifically including all the aforementioned elements of claim 6 and, in addition, wherein the primary and secondary pressure regulators are integral components of a dual stage pressure regulator, as called for in claim 7 of U.S. Patent No. 11,530,654.

Therefore, the Powermate Model DF7500E generator listed in Paragraph 100 infringes at least claims 6, 7, and 9 of U.S. Patent No. 11,530,654.

**ANSWER:** Denied.

102. Champion has no adequate remedy at law against Generac's acts of infringement and will suffer irreparable harm unless Generac is preliminarily and permanently enjoined from its infringement of U.S. Patent No. 11,530,654.

**ANSWER:** Denied.

103. Upon information and belief, Generac's infringement has been willful, deliberate, and with knowledge of Champion's rights under U.S. Patent No. 11,530,654.

**ANSWER:** Denied.

104. Upon information and belief, at least as of July 7, 2020, and again on April 4, 2024, the dates Champion sent Generac cease and desist letters demanding the cessation of infringement by Generac of Champion's patents, Generac has monitored Champion's patents and published patent applications and had actual notice of all of Champion's patents and published patent applications as of their publication dates.

**ANSWER:** Generac admits that Champion sent Generac letters dated July 7, 2020, and April 4, 2024. To the extent this paragraph implies that the July 7, 2020, and April 4, 2024, letters included a demand to cease infringement of the '654 Patent, Generac denies the same. Otherwise denied.

105. Generac, by way of its infringing activity, has caused and continues to cause Champion to suffer damages in an amount to be determined at trial.

**ANSWER:** Denied.

**COUNT IX: [NON-]INFRINGEMENT OF U.S. PATENT NO. 11,840,970**

106. Paragraphs 1 through 105 are incorporated by reference as if fully set forth herein.

**ANSWER:** No response is required. To the extent a response is required, Generac incorporates its responses to the allegations of paragraphs 1 through 105 as if set forth herein.

107. U.S. Patent No. 11,840,970 is titled "DUAL FUEL GENERATOR WITH REMOTE REGULATOR." U.S. Patent No. 11,840,970 was duly and legally issued on December 12, 2023. A true and correct copy of U.S. Patent No. 11,840,970 is attached as Exhibit I.

**ANSWER:** Exhibit I speaks for itself. Otherwise denied.

108. Champion is the lawful assignee of the entire right, title, and interest in and to U.S. Patent No. 11,840,970 and possesses all rights of recovery under the patent, including the right to recover damages for past infringement.

**ANSWER:** Generac is without information to admit or deny the allegations of this paragraph and therefore denies the same.

109. Champion has acquired and inspected the following Generac generator models that Generac has been and is making, using, selling, or offering for sale within the United States, or importing into the United States, and that infringe one or more claims of U.S. Patent No. 11,840,970:

a. Powermate Model PM4500DF, a multi-fuel portable generator;

b. Powermate Model PM7500DF, a multi-fuel portable generator;

c. Generac Model GP7500E, a multi-fuel portable generator; and

d. Powermate Model DF3500E, a multi-fuel portable generator.

**ANSWER:** Generac admits that it has made, used, sold, offered for sale, or imported Powermate Model PM4500DF, Powermate Model PM7500DF, Generac Model GP7500E, and Powermate Model DF3500E. Generac specifically denies that any such activity infringes U.S. Patent. No. 11,840,970 ("the '970 Patent"). Generac is without information to admit or deny the remaining allegations of this paragraph and therefore denies the same.

110. Upon acquisition, disassembly as needed, review of owner's manuals and electrical schematics, and inspection, it was determined that each of the foregoing Generac generator models includes all of the elements of at least claims 1-5, 11, 20-23, 25-27, and 33 of U.S. Patent No. 11,840,970. Each of the foregoing Generac generator models infringes:

a. Independent claim 1 by specifically including a dual fuel generator and fuel delivery system including a dual fuel generator having an engine configured to operate on a liquid fuel supplied from a liquid fuel source through a liquid fuel line and a gaseous fuel supplied from a pressurized fuel source through a gaseous fuel line and a carburetor attached to an intake of the engine to mix air and fuel and connect the liquid fuel line to the intake; a fuel regulator system located off board the dual fuel generator, the fuel regulator system including a primary pressure regulator coupled to a service valve of the pressurized fuel source and configured to regulate the fuel supplied from the pressurized fuel source to a reduced pressure and a secondary pressure regulator coupled to the primary pressure regulator and configured to regulate the gaseous fuel supplied from the primary pressure regulator to a desired pressure for delivery through the gaseous fuel line to operate the dual fuel generator; and a mechanical fuel valve actuatable between a first position and a second position to selectively control fuel flow to the engine from the liquid fuel source through the liquid fuel line and the pressurized fuel source through the gaseous fuel line, as called for in claim 1 of U.S. Patent No. 11,840,970.

b. Dependent claim 2 by specifically including all the aforementioned elements of claim 1 and, in addition, the carburetor connects the gaseous fuel line to the intake, as called for in claim 2 of U.S. Patent No. 11,840,970.

c. Dependent claim 3 by specifically including all the aforementioned elements of claim 1 and, in addition, a fuel lockout apparatus coupled to the mechanical fuel valve; and wherein when the mechanical fuel valve is in the first position, the fuel lockout apparatus communicates the liquid fuel source to the dual fuel generator and prevents the pressurized fuel source from coupling to the dual fuel generator, and actuation of the mechanical fuel valve to the second position causes the fuel lockout apparatus to permit the pressurized fuel source to couple to the dual fuel generator, and interrupts the liquid fuel source communication with the dual fuel generator, as called for in claim 3 of U.S. Patent No. 11,840,970.

d. Dependent claim 4 by specifically including all the aforementioned elements of claim 1 and, in addition, the mechanical fuel valve opens and closes the liquid fuel line to selectively control fuel flow from the liquid fuel source to the dual fuel generator and a fuel lockout apparatus is coupled to the mechanical fuel valve and is configured to prevent the pressurized fuel source from coupling to the gaseous fuel line while the mechanical fuel valve opens the liquid fuel line and to permit the pressurized fuel source to couple to the gaseous fuel line while the mechanical fuel valve closes the liquid fuel line, as called for in claim 4 of U.S. Patent No. 11,840,970.

e. Dependent claim 5 by specifically including all the aforementioned elements of claim 4 and, in addition, the fuel lockout apparatus is further configured to prevent the mechanical fuel valve from opening the liquid fuel line while the dual fuel generator receives fuel from the pressurized fuel source, as called for in claim 5 of U.S. Patent No. 11,840,970.

f. Dependent claim 11 by specifically including all the aforementioned elements of claim 1 and, in addition, wherein the primary and secondary pressure regulators are integral components of a dual stage pressure regulator, as called for in claim 11 of U.S. Patent No. 11,840,970.

g. Independent claim 20 by specifically including a dual fuel generator and fuel delivery system comprising: a dual fuel generator configured to operate on a liquid fuel supplied from a liquid fuel source through a liquid fuel line and a gaseous fuel supplied from a pressurized fuel source through a gaseous fuel line, the dual fuel generator comprising: a gaseous fuel valve coupled to an inlet of the gaseous fuel line and connectable to the pressurized fuel source, and a mechanical fuel valve actuatable between a first position and a second position to selectively control fuel flow to the dual fuel generator from the liquid fuel source through the liquid fuel line and the pressurized fuel source through the gaseous fuel line; and a fuel regulator system located off board the dual fuel generator, the fuel regulator system comprising: a primary pressure regulator connectable to a service valve of the pressurized fuel source and configured to regulate the fuel

supplied from the pressurized fuel source to a reduced pressure, and a secondary pressure regulator coupled to the primary pressure regulator and connectable to the gaseous fuel valve, the secondary pressure regulator configured to regulate the gaseous fuel supplied from the primary pressure regulator to a desired pressure for delivery through the gaseous fuel line to operate the dual fuel generator, as called for in claim 20 of U.S. Patent No. 11,840,970.

h. Dependent claim 21 by specifically including all the aforementioned elements of claim 20 and, in addition, wherein the pressurized fuel source is independent and disconnected from the dual fuel generator, as called for in claim 21 of U.S. Patent No. 11,840,970.

i. Dependent claim 22 by specifically including all the aforementioned elements of claim 21 and, in addition, wherein the fuel regulator system is disconnected from the dual fuel generator, as called for in claim 22 of U.S. Patent No. 11,840,970.

j. Dependent claim 23 by specifically including all the aforementioned elements of claim 21 and, in addition, wherein the primary pressure regulator is disconnected from the pressurized fuel source, as called for in claim 23 of U.S. Patent No. 11,840,970.

k. Dependent claim 25 by specifically including all the aforementioned elements of claim 20 and, in addition, a fuel lockout apparatus coupled to the mechanical fuel valve; and wherein when the mechanical fuel valve is in the first position, the fuel lockout apparatus communicates the liquid fuel source to the dual fuel generator and prevents the pressurized fuel source from coupling to the dual fuel generator, and actuation of the mechanical fuel valve to the second position causes the fuel lockout apparatus to permit the pressurized fuel source to couple to the dual fuel generator, and interrupts the liquid fuel source communication with the dual fuel generator, as called for in claim 25 of U.S. Patent No. 11,840,970.

l. Dependent claim 26 by specifically including all the aforementioned elements of claim 20 and, in addition, wherein the mechanical fuel valve opens and closes the liquid fuel line to selectively control fuel flow from the liquid fuel source to the dual fuel generator; and further comprises: a fuel lockout apparatus coupled to the mechanical fuel valve and configured to prevent the pressurize fuel source from coupling to the gaseous fuel line while the mechanical fuel valve opens the liquid fuel line, and permit the pressurized fuel source to couple to the gaseous fuel line while the mechanical fuel valve closes the liquid fuel line, as called for in claim 26 of U.S. Patent No. 11,840,970.

m. Dependent claim 27 by specifically including all the aforementioned elements of claim 26 and, in addition, wherein the fuel lockout apparatus is further configured to prevent the mechanical fuel valve from opening the liquid fuel line while the dual fuel generator receives fuel from the

pressurized fuel source, as called for in claim 27 of U.S. Patent No. 11,840,970.

n. Dependent claim 33 by specifically including all the aforementioned elements of claim 20 and, in addition, wherein the primary and secondary pressure regulators are integral components of a dual stage pressure regulator, as called for in claim 33 of U.S. Patent No. 11,840,970.

Therefore, each of the foregoing Generac generator models listed in Paragraph 109(a)-(d) infringes at least claims 1-5, 11, 20-23, 25-27, and 33 of U.S. Patent No. 11,840,970.

**ANSWER:** Denied.

111. Upon information and belief, Generac has been and is now making, using, selling, or offering for sale within the United States, or importing into the United States, the following additional generator model: Powermate Model DF7500E, a multi-fuel portable generator.

**ANSWER:** Generac admits that it has made, used, sold, offered for sale, or imported Powermate Model DF7500E. Otherwise denied.

112. Upon review of the owner's manual of the Powermate Model DF7500E generator shared with the Powermate Model DF3500E generator, review of images and electrical schematics of the Powermate Model DF7500E generator, and comparison of the images and electrical schematics of the Powermate Model DF7500E generator to images and electrical schematics of the Powermate Model DF3500E generator listed in Paragraph 109(d), it was determined that the Powermate Model DF7500E generator includes all of the elements of at least claims 1-5, 11, 20-23, 25-27, and 33 of U.S. Patent No. 11,840,970. The Powermate Model DF7500E generator infringes:

a. Independent claim 1 by specifically including a dual fuel generator and fuel delivery system including a dual fuel generator having an engine configured to operate on a liquid fuel supplied from a liquid fuel source through a liquid fuel line and a gaseous fuel supplied from a pressurized fuel source through a gaseous fuel line and a carburetor attached to an intake of the engine to mix air and fuel and connect the liquid fuel line to the intake; a fuel regulator system located off board the dual fuel generator, the fuel regulator system including a primary pressure regulator coupled to a service valve of the pressurized fuel source and configured to regulate the fuel supplied from the pressurized fuel source to a reduced pressure and a secondary pressure regulator coupled to the primary pressure regulator and configured to regulate the gaseous fuel supplied from the primary pressure regulator to a desired pressure for delivery through the gaseous fuel line to operate the dual fuel generator; and a mechanical fuel valve actuatable between a first position and a second position to selectively control fuel flow to the engine from the liquid fuel source through the liquid fuel line and the pressurized fuel source through the gaseous fuel line, as called for in claim 1 of U.S. Patent No. 11,840,970.

b. Dependent claim 2 by specifically including all the aforementioned elements of claim 1 and, in addition, the carburetor connects the gaseous fuel line to the intake, as called for in claim 2 of U.S. Patent No. 11,840,970.

c. Dependent claim 3 by specifically including all the aforementioned elements of claim 1 and, in addition, a fuel lockout apparatus coupled to the mechanical fuel valve; and wherein when the mechanical fuel valve is in the first position, the fuel lockout apparatus communicates the liquid fuel source to the dual fuel generator and prevents the pressurized fuel source from coupling to the dual fuel generator, and actuation of the mechanical fuel valve to the second position causes the fuel lockout apparatus to permit the pressurized fuel source to couple to the dual fuel generator, and interrupts the liquid fuel source communication with the dual fuel generator, as called for in claim 3 of U.S. Patent No. 11,840,970.

d. Dependent claim 4 by specifically including all the aforementioned elements of claim 1 and, in addition, the mechanical fuel valve opens and closes the liquid fuel line to selectively control fuel flow from the liquid fuel source to the dual fuel generator and a fuel lockout apparatus is coupled to the mechanical fuel valve and is configured to prevent the pressurized fuel source from coupling to the gaseous fuel line while the mechanical fuel valve opens the liquid fuel line and to permit the pressurized fuel source to couple to the gaseous fuel line while the mechanical fuel valve closes the liquid fuel line, as called for in claim 4 of U.S. Patent No. 11,840,970.

e. Dependent claim 5 by specifically including all the aforementioned elements of claim 4 and, in addition, the fuel lockout apparatus is further configured to prevent the mechanical fuel valve from opening the liquid fuel line while the dual fuel generator receives fuel from the pressurized fuel source, as called for in claim 5 of U.S. Patent No. 11,840,970.

f. Dependent claim 11 by specifically including all the aforementioned elements of claim 1 and, in addition, wherein the primary and secondary pressure regulators are integral components of a dual stage pressure regulator, as called for in claim 11 of U.S. Patent No. 11,840,970.

g. Independent claim 20 by specifically including a dual fuel generator and fuel delivery system comprising: a dual fuel generator configured to operate on a liquid fuel supplied from a liquid fuel source through a liquid fuel line and a gaseous fuel supplied from a pressurized fuel source through a gaseous fuel line, the dual fuel generator comprising: a gaseous fuel valve coupled to an inlet of the gaseous fuel line and connectable to the pressurized fuel source, and a mechanical fuel valve actuatable between a first position and a second position to selectively control fuel flow to the dual fuel generator from the liquid fuel source through the liquid fuel line and the pressurized fuel source through the gaseous fuel line; and a fuel regulator system located off board the dual fuel generator, the fuel regulator system comprising: a primary pressure regulator connectable to a service valve of the pressurized fuel source and configured to regulate the fuel

supplied from the pressurized fuel source to a reduced pressure, and a secondary pressure regulator coupled to the primary pressure regulator and connectable to the gaseous fuel valve, the secondary pressure regulator configured to regulate the gaseous fuel supplied from the primary pressure regulator to a desired pressure for delivery through the gaseous fuel line to operate the dual fuel generator, as called for in claim 20 of U.S. Patent No. 11,840,970.

h. Dependent claim 21 by specifically including all the aforementioned elements of claim 20 and, in addition, wherein the pressurized fuel source is independent and disconnected from the dual fuel generator, as called for in claim 21 of U.S. Patent No. 11,840,970.

i. Dependent claim 22 by specifically including all the aforementioned elements of claim 21 and, in addition, wherein the fuel regulator system is disconnected from the dual fuel generator, as called for in claim 22 of U.S. Patent No. 11,840,970.

j. Dependent claim 23 by specifically including all the aforementioned elements of claim 21 and, in addition, wherein the primary pressure regulator is disconnected from the pressurized fuel source, as called for in claim 23 of U.S. Patent No. 11,840,970.

k. Dependent claim 25 by specifically including all the aforementioned elements of claim 20 and, in addition, a fuel lockout apparatus coupled to the mechanical fuel valve; and wherein when the mechanical fuel valve is in the first position, the fuel lockout apparatus communicates the liquid fuel source to the dual fuel generator and prevents the pressurized fuel source from coupling to the dual fuel generator, and actuation of the mechanical fuel valve to the second position causes the fuel lockout apparatus to permit the pressurized fuel source to couple to the dual fuel generator, and interrupts the liquid fuel source communication with the dual fuel generator, as called for in claim 25 of U.S. Patent No. 11,840,970.

l. Dependent claim 26 by specifically including all the aforementioned elements of claim 20 and, in addition, wherein the mechanical fuel valve opens and closes the liquid fuel line to selectively control fuel flow from the liquid fuel source to the dual fuel generator; and further comprises: a fuel lockout apparatus coupled to the mechanical fuel valve and configured to prevent the pressurize fuel source from coupling to the gaseous fuel line while the mechanical fuel valve opens the liquid fuel line, and permit the pressurized fuel source to couple to the gaseous fuel line while the mechanical fuel valve closes the liquid fuel line, as called for in claim 26 of U.S. Patent No. 11,840,970.

m. Dependent claim 27 by specifically including all the aforementioned elements of claim 26 and, in addition, wherein the fuel lockout apparatus is further configured to prevent the mechanical fuel valve from opening the liquid fuel line while the dual fuel generator receives fuel from the

pressurized fuel source, as called for in claim 27 of U.S. Patent No. 11,840,970.

n. Dependent claim 33 by specifically including all the aforementioned elements of claim 20 and, in addition, wherein the primary and secondary pressure regulators are integral components of a dual stage pressure regulator, as called for in claim 33 of U.S. Patent No. 11,840,970.

Therefore, the Powermate Model DF7500E generator listed in Paragraph 111 infringes at least claims 1-5, 11, 20-23, 25-27, and 33 of U.S. Patent No. 11,840,970.

**ANSWER:** Denied.

113. Champion has no adequate remedy at law against Generac's acts of infringement and will suffer irreparable harm unless Generac is preliminarily and permanently enjoined from its infringement of U.S. Patent No. 11,840,970.

**ANSWER:** Denied.

114. Upon information and belief, Generac's infringement has been willful, deliberate, and with knowledge of Champion's rights under U.S. Patent No. 11,840,970.

**ANSWER:** Denied.

115. Upon information and belief, at least as of July 7, 2020, and again on April 4, 2024, the dates Champion sent Generac cease and desist letters demanding the cessation of infringement by Generac of Champion's patents, Generac has monitored Champion's patents and published patent applications and had actual notice of all of Champion's patents and published patent applications as of their publication dates.

**ANSWER:** Generac admits that Champion sent Generac letters dated July 7, 2020, and April 4, 2024. To the extent this paragraph implies that the July 7, 2020, and April 4, 2024, letters included a demand to cease infringement of the '970 Patent, Generac denies the same. Otherwise denied.

116. Generac, by way of its infringing activity, has caused and continues to cause Champion to suffer damages in an amount to be determined at trial.

**ANSWER:** Denied.

**COUNT X: [NON-]INFRINGEMENT OF U.S. PATENT NO. 11,905,895**

117. Paragraphs 1 through 116 are incorporated by reference as if fully set forth herein.

**ANSWER:** No response is required. To the extent a response is required, Generac incorporates its responses to the allegations of paragraphs 1 through 116 as if set forth herein.

118. U.S. Patent No. 11,905,895 is titled "DUAL FUEL LOCKOUT SWITCH FOR GENERATOR ENGINE." U.S. Patent No. 11,905,895 was duly and legally issued on February 20, 2024. A true and correct copy of U.S. Patent No. 11,905,895 is attached as Exhibit J.

**ANSWER:** Exhibit J speaks for itself. Otherwise denied.

119. Champion is the lawful assignee of the entire right, title, and interest in and to U.S. Patent No. 11,905,895 and possesses all rights of recovery under the patent, including the right to recover damages for past infringement.

**ANSWER:** Generac is without information to admit or deny the allegations of this paragraph and therefore denies the same.

120. Champion has acquired and inspected the following Generac generator models that Generac has been and is making, using, selling, or offering for sale within the United States, or importing into the United States, and that infringe one or more claims of U.S. Patent No. 11,905,895:

a. Powermate Model PM4500DF, a multi-fuel portable generator;

b. Powermate Model PM7500DF, a multi-fuel portable generator;

c. Generac Model GP7500E, a multi-fuel portable generator; and

d. Powermate Model DF3500E, a multi-fuel portable generator.

**ANSWER:** Generac admits that it has made, used, sold, offered for sale, or imported Powermate Model PM4500DF, Powermate Model PM7500DF, Generac Model GP7500E, and Powermate Model DF3500E. Generac specifically denies that any such activity infringes U.S. Patent. No. 11,905,895 ("the '895 Patent"). Generac is without information to admit or deny the remaining allegations of this paragraph and therefore denies the same.

121. Upon acquisition, disassembly as needed, review of owner's manuals and electrical schematics, and inspection, it was determined that each of the foregoing Generac generator models includes all of the elements of at least claims 1, 2, 6-8, 12-15, and 21 of U.S. Patent No. 11,905,895. Each of the foregoing Generac generator models infringes:

a. Independent claim 1 by specifically including a mechanical fuel lockout switch for a dual fuel engine having a mechanical fuel valve actuatable between a first position and a second position to selectively control fuel

flow to the dual fuel engine from a first fuel source through a first fuel line and a second fuel source through a second fuel line, the mechanical fuel valve configured to allow communication between the first fuel source and the dual fuel engine and prevent communication between the second fuel source and the dual fuel engine while in the first position and prevent communication between the first fuel source and the dual fuel engine while in the second position; and a fuel lockout apparatus coupled to the mechanical fuel valve and configured to prevent the second fuel source from coupling to the second fuel line while the mechanical fuel valve is in the first position and permit the second fuel source to couple to the second fuel line while the mechanical fuel valve is in the second position, as called for in claim 1 of U.S. Patent No. 11,905,895.

b. Dependent claim 2 by specifically including all the aforementioned elements of claim 1 and, in addition, the fuel lockout apparatus prevents actuation of the mechanical fuel valve to the first position when the second fuel source is in communication with the dual fuel engine, as called for in claim 2 of U.S. Patent No. 11,905,895.

c. Dependent claim 6 by specifically including all the aforementioned elements of claim 1 and, in addition, the mechanical fuel valve and the fuel lockout apparatus operate together to ensure that fuel from the first fuel source and fuel from the second fuel source are not simultaneously delivered to the dual fuel engine, as called for in claim 6 of U.S. Patent No. 11,905,895.

d. Dependent claim 7 by specifically including all the aforementioned elements of claim 6 and, in addition, wherein the mechanical fuel valve is configured to: provide liquid fuel from a liquid fuel tank of the first fuel source to the dual fuel engine while in the first position, and provide gaseous fuel from a pressurized fuel container of the second fuel source to the dual fuel engine while in the second position, as called for in claim 7 of U.S. Patent No. 11,905,895.

e. Independent claim 8 by specifically including a mechanical fuel lockout switch for a dual fuel engine having a mechanical fuel valve actuatable between a first position and a second position to selectively control fuel flow to the dual fuel engine from a first fuel source through a first fuel line and a second fuel source through a second fuel line, the mechanical fuel valve configured to allow communication between the first fuel source and the dual fuel engine and prevent communication between the second fuel source and the dual fuel engine while the first position and prevent communication between the first fuel source and the dual fuel engine while in the second position; and a fuel lockout apparatus coupled to the mechanical fuel valve and configured to prevent actuation of the mechanical fuel valve to the first position when the second fuel source is in communication with the dual fuel engine, as called for in claim 8 of U.S. Patent No. 11,905,895.

f. Dependent claim 12 by specifically including all the aforementioned elements of claim 8 and, in addition, the mechanical fuel valve and the fuel lockout apparatus operate together to ensure that fuel from the first fuel source and fuel from the second fuel source are not simultaneously delivered to the dual fuel engine, as called for in claim 12 of U.S. Patent No. 11,905,895.

g. Dependent claim 13 by specifically including all the aforementioned elements of claim 12 and, in addition, wherein the mechanical fuel valve is configured to: provide liquid fuel from a liquid fuel tank of the first fuel source to the dual fuel engine while in the first position, and provide gaseous fuel from a pressurized fuel container of the second fuel source to the dual fuel engine while in the second position, as called for in claim 13 of U.S. Patent No. 11,905,895.

h. Independent claim 14 by specifically including a dual fuel generator and fuel delivery system having a dual fuel generator configured to operate on a liquid fuel supplied from a liquid fuel source through a liquid fuel line and a gaseous fuel supplied from a pressurized fuel source through a gaseous fuel line; a fuel regulator system located off board the dual fuel generator, the fuel regulator system including a primary pressure regulator couplable to a service valve of the pressurized fuel source and configured to regulate the gaseous fuel supplied from the pressurized fuel source to a reduced pressure and a secondary pressure regulator couplable to the primary pressure regulator and configured to regulate the gaseous fuel supplied from the primary pressure regulator to a desired pressure for delivery through the gaseous fuel line to operate the dual fuel generator; a mechanical fuel valve actuatable between a first position and a second position to selectively control fuel flow to the dual fuel generator from the liquid fuel source through the liquid fuel line and the pressurized fuel source through the gaseous fuel line, the mechanical fuel valve configured to open and close the liquid fuel line to selectively control fuel flow from the liquid fuel source to the dual fuel generator; and a fuel lockout apparatus coupled to the mechanical fuel valve and configured to prevent the pressurized fuel source from coupling to the gaseous fuel line while the liquid fuel line is open and permit the pressurized fuel source to couple to the gaseous fuel line while the liquid fuel line is closed by the mechanical fuel valve, as called for in claim 14 of U.S. Patent No. 11,905,895.

i. Dependent claim 15 by specifically including all the aforementioned elements of claim 14 and, in addition, the fuel lockout apparatus is further configured to prevent the mechanical fuel valve from opening the liquid fuel line while the fuel regulator system is coupled to the gaseous fuel line, as called for in claim 15 of U.S. Patent No. 11,905,895.

j. Dependent claim 21 by specifically including all the aforementioned elements of claim 14 and, in addition, wherein: the fuel regulator system comprises a dual stage pressure regulator; and the primary and secondary

pressure regulators are integral components of the dual stage pressure regulator, as called for in claim 21 of U.S. Patent No. 11,905,895.

Therefore, each of the foregoing Generac generator models listed in Paragraph 120(a)-(d) infringes at least claims 1, 2, 6-8, 12-15 and 21 of U.S. Patent No. 11,905,895.

**ANSWER:** Denied.

122. Upon information and belief, Generac has been and is now making, using, selling, or offering for sale within the United States, or importing into the United States, the following additional generator model: Powermate Model DF7500E, a multi-fuel portable generator.

**ANSWER:** Generac admits that it has made, used, sold, offered for sale, or imported Powermate Model DF7500E. Otherwise denied.

123. Upon review of the owner's manual of the Powermate Model DF7500E generator shared with the Powermate Model DF3500E generator, review of images and electrical schematics of the Powermate Model DF7500E generator, and comparison of the images and electrical schematics of the Powermate Model DF7500E generator to images and electrical schematics of the Powermate Model DF3500E generator listed in Paragraph 120(d), it was determined that the Powermate Model DF7500E generator includes all of the elements of at least claims 1, 2, 6-8, 12-15 and 21 of U.S. Patent No. 11,905,895. The Powermate Model DF7500E generator infringes:

a. Independent claim 1 by specifically including a mechanical fuel lockout switch for a dual fuel engine having a mechanical fuel valve actuatable between a first position and a second position to selectively control fuel flow to the dual fuel engine from a first fuel source through a first fuel line and a second fuel source through a second fuel line, the mechanical fuel valve configured to allow communication between the first fuel source and the dual fuel engine and prevent communication between the second fuel source and the dual fuel engine while in the first position and prevent communication between the first fuel source and the dual fuel engine while in the second position; and a fuel lockout apparatus coupled to the mechanical fuel valve and configured to prevent the second fuel source from coupling to the second fuel line while the mechanical fuel valve is in the first position and permit the second fuel source to couple to the second fuel line while the mechanical fuel valve is in the second position, as called for in claim 1 of U.S. Patent No. 11,905,895.

b. Dependent claim 2 by specifically including all the aforementioned elements of claim 1 and, in addition, the fuel lockout apparatus prevents actuation of the mechanical fuel valve to the first position when the second fuel source is in communication with the dual fuel engine, as called for in claim 2 of U.S. Patent No. 11,905,895.

c. Dependent claim 6 by specifically including all the aforementioned elements of claim 1 and, in addition, the mechanical fuel valve and the fuel

lockout apparatus operate together to ensure that fuel from the first fuel source and fuel from the second fuel source are not simultaneously delivered to the dual fuel engine, as called for in claim 6 of U.S. Patent No. 11,905,895.

d. Dependent claim 7 by specifically including all the aforementioned elements of claim 6 and, in addition, wherein the mechanical fuel valve is configured to: provide liquid fuel from a liquid fuel tank of the first fuel source to the dual fuel engine while in the first position, and provide gaseous fuel from a pressurized fuel container of the second fuel source to the dual fuel engine while in the second position, as called for in claim 7 of U.S. Patent No. 11,905,895.

e. Independent claim 8 by specifically including a mechanical fuel lockout switch for a dual fuel engine having a mechanical fuel valve actuatable between a first position and a second position to selectively control fuel flow to the dual fuel engine from a first fuel source through a first fuel line and a second fuel source through a second fuel line, the mechanical fuel valve configured to allow communication between the first fuel source and the dual fuel engine and prevent communication between the second fuel source and the dual fuel engine while the first position and prevent communication between the first fuel source and the dual fuel engine while in the second position; and a fuel lockout apparatus coupled to the mechanical fuel valve and configured to prevent actuation of the mechanical fuel valve to the first position when the second fuel source is in communication with the dual fuel engine, as called for in claim 8 of U.S. Patent No. 11,905,895.

f. Dependent claim 12 by specifically including all the aforementioned elements of claim 8 and, in addition, the mechanical fuel valve and the fuel lockout apparatus operate together to ensure that fuel from the first fuel source and fuel from the second fuel source are not simultaneously delivered to the dual fuel engine, as called for in claim 12 of U.S. Patent No. 11,905,895.

g. Dependent claim 13 by specifically including all the aforementioned elements of claim 12 and, in addition, wherein the mechanical fuel valve is configured to: provide liquid fuel from a liquid fuel tank of the first fuel source to the dual fuel engine while in the first position, and provide gaseous fuel from a pressurized fuel container of the second fuel source to the dual fuel engine while in the second position, as called for in claim 13 of U.S. Patent No. 11,905,895.

h. Independent claim 14 by specifically including a dual fuel generator and fuel delivery system having a dual fuel generator configured to operate on a liquid fuel supplied from a liquid fuel source through a liquid fuel line and a gaseous fuel supplied from a pressurized fuel source through a gaseous fuel line; a fuel regulator system located off board the dual fuel generator, the fuel regulator system including a primary pressure regulator couplable

to a service valve of the pressurized fuel source and configured to regulate the gaseous fuel supplied from the pressurized fuel source to a reduced pressure and a secondary pressure regulator couplable to the primary pressure regulator and configured to regulate the gaseous fuel supplied from the primary pressure regulator to a desired pressure for delivery through the gaseous fuel line to operate the dual fuel generator; a mechanical fuel valve actuatable between a first position and a second position to selectively control fuel flow to the dual fuel generator from the liquid fuel source through the liquid fuel line and the pressurized fuel source through the gaseous fuel line, the mechanical fuel valve configured to open and close the liquid fuel line to selectively control fuel flow from the liquid fuel source to the dual fuel generator; and a fuel lockout apparatus coupled to the mechanical fuel valve and configured to prevent the pressurized fuel source from coupling to the gaseous fuel line while the liquid fuel line is open and permit the pressurized fuel source to couple to the gaseous fuel line while the liquid fuel line is closed by the mechanical fuel valve, as called for in claim 14 of U.S. Patent No. 11,905,895.

i. Dependent claim 15 by specifically including all the aforementioned elements of claim 14 and, in addition, the fuel lockout apparatus is further configured to prevent the mechanical fuel valve from opening the liquid fuel line while the fuel regulator system is coupled to the gaseous fuel line, as called for in claim 15 of U.S. Patent No. 11,905,895.

j. Dependent claim 21 by specifically including all the aforementioned elements of claim 14 and, in addition, wherein: the fuel regulator system comprises a dual stage pressure regulator; and the primary and secondary pressure regulators are integral components of the dual stage pressure regulator, as called for in claim 21 of U.S. Patent No. 11,905,895.

Therefore, the Powermate Model DF7500E generator listed in Paragraph 122 infringes at least claims 1, 2, 6-8, 12-15 and 21 of U.S. Patent No. 11,905,895.

**ANSWER:** Denied.

124. Champion has no adequate remedy at law against Generac's acts of infringement and will suffer irreparable harm unless Generac is preliminarily and permanently enjoined from its infringement of U.S. Patent No. 11,905,895.

**ANSWER:** Denied.

125. Upon information and belief, Generac's infringement has been willful, deliberate, and with knowledge of Champion's rights under U.S. Patent No. 11,905,895.

**ANSWER:** Denied.

126. Upon information and belief, at least as of July 7, 2020, and again on April 4, 2024, the dates Champion sent Generac cease and desist letters demanding the cessation of infringement by Generac of Champion's patents, Generac has monitored Champion's patents and published

patent applications and had actual notice of all of Champion's patents and published patent applications as of their publication dates.

**ANSWER:** Generac admits that Champion sent Generac letters dated July 7, 2020, and April 4, 2024. To the extent this paragraph implies that the July 7, 2020, and April 4, 2024, letters included a demand to cease infringement of the '895 Patent, Generac denies the same. Otherwise denied.

127. Generac, by way of its infringing activity, has caused and continues to cause Champion to suffer damages in an amount to be determined at trial.

**ANSWER:** Denied.

**COUNT XI: [NON-]INFRINGEMENT OF U.S. PATENT NO. 11,905,896**

128. Paragraphs 1 through 127 are incorporated by reference as if fully set forth herein.

**ANSWER:** No response is required. To the extent a response is required, Generac incorporates its responses to the allegations of paragraphs 1 through 127 as if set forth herein.

129. U.S. Patent No. 11,905,896 is titled "DUAL FUEL SELECTOR SWITCH." U.S. Patent No. 11,905,896 was duly and legally issued on February 20, 2024. A true and correct copy of U.S. Patent No. 11,905,896 is attached as Exhibit K.

**ANSWER:** Exhibit K speaks for itself. Otherwise denied.

130. Champion is the lawful assignee of the entire right, title, and interest in and to U.S. Patent No. 11,905,896 and possesses all rights of recovery under the patent, including the right to recover damages for past infringement.

**ANSWER:** Generac is without information to admit or deny the allegations of this paragraph and therefore denies the same.

131. Champion has acquired and inspected the following Generac generator models that Generac has been and is making, using, selling, or offering for sale within the United States, or importing into the United States, and that infringe one or more claims of U.S. Patent No. 11,905,896:

a. Powermate Model PM4500DF, a multi-fuel portable generator;

b. Powermate Model PM7500DF, a multi-fuel portable generator; and

c. Generac Model GP7500E, a multi-fuel portable generator.

**ANSWER:** Generac admits that it has made, used, sold, offered for sale, or imported Powermate Model PM4500DF, Powermate Model PM7500DF, and Generac Model GP7500E. Generac specifically denies that any such activity infringes U.S. Patent. No. 11,905,896 ("the '896 Patent"). Generac is without information to admit or deny the remaining allegations of this paragraph and therefore denies the same.

132. Upon acquisition, disassembly as needed, review of owner's manuals and electrical schematics, and inspection, it was determined that each of the foregoing Generac generator models includes all of the elements of at least claims 7, 8, 14-16, 30-32, 34, and 35 of U.S. Patent No. 11,905,896. Each of the foregoing Generac generator models infringes:

a. Independent claim 7 by specifically including a fuel selector for use with a dual fuel generator, the fuel selector comprising: a valve assembly fluidly couplable to each of a first fuel source and a second fuel source and operable to selectively control a first fuel flow and a second fuel flow from the first fuel source and the second fuel source, respectively, to an engine of the dual fuel generator, the valve assembly comprising: a first mechanical fuel valve having open and closed positions to selectively control the first fuel flow to the engine; and a second mechanical fuel valve having open and closed positions to selectively control the second fuel flow to the engine; and a selector switch movable with respect to the valve assembly to allow a user to manually select the first fuel flow or the second fuel flow, as called for in claim 7 of U.S. Patent No. 11,905,896.

b. Dependent claim 8 by specifically including all the aforementioned elements of claim 7 and, in addition, wherein the selector switch provides for manual actuation of the first fuel valve and the second fuel valve between the open and closed positions, as called for in claim 8 of U.S. Patent No. 11,905,896.

c. Dependent claim 14 by specifically including all the aforementioned elements of claim 7 and, in addition, wherein: the first fuel valve is couplable to a liquefied petroleum gas (LPG) fuel source; and the second fuel valve is couplable to a gasoline source, as called for in claim 14 of U.S. Patent No. 11,905,896.

d. Independent claim 15 by specifically including a fuel selector for use with a dual fuel generator, the fuel selector comprising: a valve assembly fluidly couplable to each of a first fuel source and a second fuel source and operable to selectively control a first fuel flow and a second fuel flow from the first fuel source and the second fuel source, respectively, to an engine of the dual fuel generator, the valve assembly comprising: a first fuel valve having open and closed positions to selectively control the first fuel flow to the engine; and a second fuel valve having open and closed positions to selectively

control the second fuel flow to the engine; and at least one valve handle mechanically coupled to the first fuel valve and the second fuel valve to selectively open and close the first fuel valve and the second fuel valve responsive to actuation thereof so as to enable the first fuel flow to the engine or the second fuel flow to the engine, as called for in claim 15 of U.S. Patent No. 11,905,896.

e. Dependent claim 16 by specifically including the all the aforementioned elements of claim 15 and, in addition, wherein the at least one valve handle enables only one of the first and second fuel flows to the engine at a given time, as called for in claim 36 of U.S. Patent No. 11,905,896.

f. Independent claim 30 by specifically including a fuel selector for use with a dual fuel generator, the fuel selector comprising: a valve assembly fluidly couplable to each of a first fuel source and a second fuel source and operable to selectively control a first fuel flow and a second fuel flow from the first fuel source and the second fuel source, respectively, to an engine of the dual fuel generator, the valve assembly comprising: two fuel inputs comprising: a first fuel input couplable to the first fuel source; and a second fuel input couplable to the second fuel source; and two fuel outputs configured to selectively supply fuel to the engine from the first fuel source or the second fuel source; and a selector switch positioned on the valve assembly to allow a user to manually select the first fuel flow or the second fuel flow, as called for in claim 30 of U.S. Patent No. 11,905,896.

g. Dependent claim 31 by specifically including all the aforementioned elements of claim 30 and, in addition, wherein the two fuel outputs are configured to selectively supply fuel to the engine from only one of the first and second fuel sources responsive to selection of the first fuel flow or the second fuel flow via the selector switch and a corresponding operation of the valve assembly, as called for in claim 31 of U.S. Patent No. 11,905,896.

h. Dependent claim 32 by specifically including all the aforementioned elements of claim 30 and, in addition, wherein the valve assembly comprises: a first fuel valve having open and closed positions to selectively control the first fuel flow to the engine; and a second fuel valve having open and closed positions to selectively control the second fuel flow to the engine, as called for in claim 32 of U.S. Patent No. 11,905,896.

i. Dependent claim 34 by specifically including all the aforementioned elements of claim 32 and, in addition, wherein the first fuel valve and the second fuel valve are non-solenoid, mechanical valves, as called for in claim 34 of U.S. Patent No. 11,905,896.

j. Dependent claim 35 by specifically including all the aforementioned elements of claim 32 and, in addition, wherein the selector switch provides for manual actuation of the first fuel valve and the second fuel valve between the open and closed positions, as called for in claim 35 of U.S. Patent No. 11,905,896.

Therefore, each of the Generac generator models listed in Paragraph 131(a)-(c) infringes at least claims 7, 8, 14-16, 30-32, 34, and 35 of U.S. Patent No. 11,905,896.

**ANSWER:** Denied.

133. Champion has acquired and inspected the following Generac generator models that Generac has been and is making, using, selling, or offering for sale within the United States, or importing into the United States, and that infringe one or more claims of U.S. Patent No. 11,905,896: Powermate Model DF3500E, a multi-fuel portable generator.

**ANSWER:** Generac admits that it has made, used, sold, offered for sale, or imported Powermate Model DF3500E. Generac specifically denies that any such activity infringes the '896 Patent. Generac is without information to admit or deny the remaining allegations of this paragraph and therefore denies the same.

134. Upon acquisition, disassembly as needed, review of owner's manuals and electrical schematics, and inspection, it was determined that the Powermate Model DF3500E generator includes all of the elements of at least claims 7, 8, 14-16, and 34-38 of U.S. Patent No. 11,905,896. The Powermate Model DF3500E generator infringes:

a. Independent claim 7 by specifically including a fuel selector for use with a dual fuel generator, the fuel selector comprising: a valve assembly fluidly couplable to each of a first fuel source and a second fuel source and operable to selectively control a first fuel flow and a second fuel flow from the first fuel source and the second fuel source, respectively, to an engine of the dual fuel generator, the valve assembly comprising: a first mechanical fuel valve having open and closed positions to selectively control the first fuel flow to the engine; and a second mechanical fuel valve having open and closed positions to selectively control the second fuel flow to the engine; and a selector switch movable with respect to the valve assembly to allow a user to manually select the first fuel flow or the second fuel flow, as called for in claim 7 of U.S. Patent No. 11,905,896.

b. Dependent claim 8 by specifically including all the aforementioned elements of claim 7 and, in addition, wherein the selector switch provides for manual actuation of the first fuel valve and the second fuel valve between the open and closed positions, as called for in claim 8 of U.S. Patent No. 11,905,896.

c. Dependent claim 14 by specifically including all the aforementioned elements of claim 7 and, in addition, wherein: the first fuel valve is couplable to a liquefied petroleum gas (LPG) fuel source; and the second fuel valve is couplable to a gasoline source, as called for in claim 14 of U.S. Patent No. 11,905,896.

d. Independent claim 15 by specifically including a fuel selector for use with a dual fuel generator, the fuel selector comprising: a valve assembly fluidly couplable to each of a first fuel source and a second fuel source and operable to selectively control a first fuel flow and a second fuel flow from the first fuel source and the second fuel source, respectively, to an engine of the dual fuel generator, the valve assembly comprising: a first fuel valve having open and closed positions to selectively control the first fuel flow to the engine; and a second fuel valve having open and closed positions to selectively control the second fuel flow to the engine; and at least one valve handle mechanically coupled to the first fuel valve and the second fuel valve to selectively open and close the first fuel valve and the second fuel valve responsive to actuation thereof so as to enable the first fuel flow to the engine or the second fuel flow to the engine, as called for in claim 15 of U.S. Patent No. 11,905,896.

e. Dependent claim 16 by specifically including the all the aforementioned elements of claim 15 and, in addition, wherein the at least one valve handle enables only one of the first and second fuel flows to the engine at a given time, as called for in claim 36 of U.S. Patent No. 11,905,896.

f. Independent claim 30 by specifically including a fuel selector for use with a dual fuel generator, the fuel selector comprising: a valve assembly fluidly couplable to each of a first fuel source and a second fuel source and operable to selectively control a first fuel flow and a second fuel flow from the first fuel source and the second fuel source, respectively, to an engine of the dual fuel generator, the valve assembly comprising: two fuel inputs comprising: a first fuel input couplable to the first fuel source; and a second fuel input couplable to the second fuel source; and two fuel outputs configured to selectively supply fuel to the engine from the first fuel source or the second fuel source; and a selector switch positioned on the valve assembly to allow a user to manually select the first fuel flow or the second fuel flow, as called for in claim 30 of U.S. Patent No. 11,905,896.

g. Dependent claim 31 by specifically including all the aforementioned elements of claim 30 and, in addition, wherein the two fuel outputs are configured to selectively supply fuel to the engine from only one of the first and second fuel sources responsive to selection of the first fuel flow or the second fuel flow via the selector switch and a corresponding operation of the valve assembly, as called for in claim 31 of U.S. Patent No. 11,905,896.

h. Dependent claim 32 by specifically including all the aforementioned elements of claim 30 and, in addition, wherein the valve assembly comprises: a first fuel valve having open and closed positions to selectively control the first fuel flow to the engine; and a second fuel valve having open and closed positions to selectively control the second fuel flow to the engine, as called for in claim 32 of U.S. Patent No. 11,905,896.

i. Dependent claim 34 by specifically including all the aforementioned elements of claim 32 and, in addition, wherein the first fuel valve and the

second fuel valve are non-solenoid, mechanical valves, as called for in claim 34 of U.S. Patent No. 11,905,896.

j. Dependent claim 35 by specifically including all the aforementioned elements of claim 32 and, in addition, wherein the selector switch provides for manual actuation of the first fuel valve and the second fuel valve between the open and closed positions, as called for in claim 35 of U.S. Patent No. 11,905,896.

k. Dependent claim 36 by specifically including all the aforementioned elements of claim 30 and, in addition, a carburetor solenoid switch configured to activate an associated carburetor solenoid when actuated, as called for in claim 36 of U.S. Patent No. 11,905,896.

l. Dependent claim 37 by specifically including all the aforementioned elements of claim 36 and, in addition, wherein, when the selector switch is in a first position, the selector switch actuates the carburetor solenoid switch so as to activate the carburetor solenoid and prohibit the second fuel flow to the engine, as called for in claim 37 of U.S. Patent No. 11,905,896.

m. Dependent claim 38 by specifically including all the aforementioned elements of claim 37 and, in addition, wherein, when the selector switch is in a second position, the carburetor solenoid allows the second fuel flow to the engine, as called for in claim 38 of U.S. Patent No. 11,905,896.

Therefore, the Powermate Model DF3500E generator listed in Paragraph 133 infringes at least claims 7, 8, 14-16, 30-32, and 34-38 of U.S. Patent No. 11,905,896.

**ANSWER:** Denied.

135. Upon information and belief, Generac has been and is now making, using, selling, or offering for sale within the United States, or importing into the United States, the following additional generator model: Powermate Model DF7500E, a multi-fuel portable generator.

**ANSWER:** Generac admits that it has made, used, sold, offered for sale, or imported Powermate Model DF7500E. Otherwise denied.

136. Upon review of the owner's manual of the Powermate Model DF7500E generator shared with the Powermate Model DF3500E generator, review of images and electrical schematics of the Powermate Model DF7500E generator, and comparison of the images and electrical schematics of the Powermate Model DF7500E generator to images and electrical schematics of the Powermate Model DF3500E generator listed in Paragraph 133, it was determined that the Powermate Model DF7500E generator includes all of the elements of at least claims 7, 8, 14-16, 30- 30-32, and 34-38 of U.S. Patent No. 11,905,896. The Powermate Model DF7500E generator infringes:

a. Independent claim 7 by specifically including a fuel selector for use with a dual fuel generator, the fuel selector comprising: a valve assembly fluidly couplable to each of a first fuel source and a second fuel source and operable

to selectively control a first fuel flow and a second fuel flow from the first fuel source and the second fuel source, respectively, to an engine of the dual fuel generator, the valve assembly comprising: a first mechanical fuel valve having open and closed positions to selectively control the first fuel flow to the engine; and a second mechanical fuel valve having open and closed positions to selectively control the second fuel flow to the engine; and a selector switch movable with respect to the valve assembly to allow a user to manually select the first fuel flow or the second fuel flow, as called for in claim 7 of U.S. Patent No. 11,905,896.

b. Dependent claim 8 by specifically including all the aforementioned elements of claim 7 and, in addition, wherein the selector switch provides for manual actuation of the first fuel valve and the second fuel valve between the open and closed positions, as called for in claim 8 of U.S. Patent No. 11,905,896.

c. Dependent claim 14 by specifically including all the aforementioned elements of claim 7 and, in addition, wherein: the first fuel valve is couplable to a liquefied petroleum gas (LPG) fuel source; and the second fuel valve is couplable to a gasoline source, as called for in claim 14 of U.S. Patent No. 11,905,896.

d. Independent claim 15 by specifically including a fuel selector for use with a dual fuel generator, the fuel selector comprising: a valve assembly fluidly couplable to each of a first fuel source and a second fuel source and operable to selectively control a first fuel flow and a second fuel flow from the first fuel source and the second fuel source, respectively, to an engine of the dual fuel generator, the valve assembly comprising: a first fuel valve having open and closed positions to selectively control the first fuel flow to the engine; and a second fuel valve having open and closed positions to selectively control the second fuel flow to the engine; and at least one valve handle mechanically coupled to the first fuel valve and the second fuel valve to selectively open and close the first fuel valve and the second fuel valve responsive to actuation thereof so as to enable the first fuel flow to the engine or the second fuel flow to the engine, as called for in claim 15 of U.S. Patent No. 11,905,896.

e. Dependent claim 16 by specifically including the all the aforementioned elements of claim 15 and, in addition, wherein the at least one valve handle enables only one of the first and second fuel flows to the engine at a given time, as called for in claim 36 of U.S. Patent No. 11,905,896.

f. Independent claim 30 by specifically including a fuel selector for use with a dual fuel generator, the fuel selector comprising: a valve assembly fluidly couplable to each of a first fuel source and a second fuel source and operable to selectively control a first fuel flow and a second fuel flow from the first fuel source and the second fuel source, respectively, to an engine of the dual fuel generator, the valve assembly comprising: two fuel inputs comprising: a first fuel input couplable to the first fuel source; and a second fuel input

couplable to the second fuel source; and two fuel outputs configured to selectively supply fuel to the engine from the first fuel source or the second fuel source; and a selector switch positioned on the valve assembly to allow a user to manually select the first fuel flow or the second fuel flow, as called for in claim 30 of U.S. Patent No. 11,905,896.

g. Dependent claim 31 by specifically including all the aforementioned elements of claim 30 and, in addition, wherein the two fuel outputs are configured to selectively supply fuel to the engine from only one of the first and second fuel sources responsive to selection of the first fuel flow or the second fuel flow via the selector switch and a corresponding operation of the valve assembly, as called for in claim 31 of U.S. Patent No. 11,905,896.

h. Dependent claim 32 by specifically including all the aforementioned elements of claim 30 and, in addition, wherein the valve assembly comprises: a first fuel valve having open and closed positions to selectively control the first fuel flow to the engine; and a second fuel valve having open and closed positions to selectively control the second fuel flow to the engine, as called for in claim 32 of U.S. Patent No. 11,905,896.

i. Dependent claim 34 by specifically including all the aforementioned elements of claim 32 and, in addition, wherein the first fuel valve and the second fuel valve are non-solenoid, mechanical valves, as called for in claim 34 of U.S. Patent No. 11,905,896.

j. Dependent claim 35 by specifically including all the aforementioned elements of claim 32 and, in addition, wherein the selector switch provides for manual actuation of the first fuel valve and the second fuel valve between the open and closed positions, as called for in claim 35 of U.S. Patent No. 11,905,896.

k. Dependent claim 36 by specifically including all the aforementioned elements of claim 30 and, in addition, a carburetor solenoid switch configured to activate an associated carburetor solenoid when actuated, as called for in claim 36 of U.S. Patent No. 11,905,896.

l. Dependent claim 37 by specifically including all the aforementioned elements of claim 36 and, in addition, wherein, when the selector switch is in a first position, the selector switch actuates the carburetor solenoid switch so as to activate the carburetor solenoid and prohibit the second fuel flow to the engine, as called for in claim 37 of U.S. Patent No. 11,905,896.

m. Dependent claim 38 by specifically including all the aforementioned elements of claim 37 and, in addition, wherein, when the selector switch is in a second position, the carburetor solenoid allows the second fuel flow to the engine, as called for in claim 38 of U.S. Patent No. 11,905,896.

Therefore, the Powermate Model DF7500E generator listed in Paragraph 135 infringes at least claims 7, 8, 14-16, 30-32, and 34-38 of U.S. Patent No. 11,905,896.

**ANSWER:** Denied.

137. Champion has no adequate remedy at law against Generac's acts of infringement and will suffer irreparable harm unless Generac is preliminarily and permanently enjoined from its infringement of U.S. Patent No. 11,905,896.

**ANSWER:** Denied.

138. Upon information and belief, Generac's infringement has been willful, deliberate, and with knowledge of Champion's rights under U.S. Patent No. 11,905,896.

**ANSWER:** Denied.

139. Upon information and belief, at least as of July 7, 2020, and again on April 4, 2024, the dates Champion sent Generac cease and desist letters demanding the cessation of infringement by Generac of Champion's patents, Generac has monitored Champion's patents and published patent applications and had actual notice of all of Champion's patents and published patent applications as of their publication dates.

**ANSWER:** Generac admits that Champion sent Generac letters dated July 7, 2020, and April 4, 2024. To the extent this paragraph implies that the July 7, 2020, and April 4, 2024, letters included a demand to cease infringement of the '896 Patent, Generac denies the same. Otherwise denied.

140. Generac, by way of its infringing activity, has caused and continues to cause Champion to suffer damages in an amount to be determined at trial.

**ANSWER:** Denied.

## PRAYER FOR RELIEF

Generac denies that Plaintiff is entitled to any judgment or relief, and denies all allegations contained in Plaintiff's Prayer for Relief.

## JURY DEMAND

Pursuant to Rule 38(b) of the Federal Rules of Procedure, Generac hereby demands a trial by jury on all issues triable as a matter of right by a jury.

## DEFENSES

By pleading these defenses, Generac does not in any way agree or concede that Generac has the burden of proof or persuasion on any of these issues. Generac reserves the right to raise,

assert, rely upon, or add additional defenses, including those listed in Fed. R. Civ. P. 8(c), the laws of Wisconsin, or any other governing jurisdictions that may exist or in the future be applicable based on discovery and further factual investigation in this case.

**Defense 1: Non-Infringement**

Generac has not infringed, either literally or under the doctrine of equivalents, or directly or indirectly contributed to infringement by others, or actively induced others to infringe the '780 Patent, '101 Patent, '398 Patent, '120 Patent, '145 Patent, '667 Patent, '985 Patent, '654 Patent, '970 Patent, '895 Patent, or '896 Patent.

**Defense 2: Invalidity**

The claims of the '780 Patent, '101 Patent, '398 Patent, '120 Patent, '145 Patent, '667 Patent, '985 Patent, '654 Patent, '970 Patent, '895 Patent, and '896 Patent are invalid for failure to satisfy one or more of the requirements of Sections 101, 102, 103, and/or 112 of Title 35 of the United States Code.

**Defense 3: Incorrect Inventorship**

The claims of the '780 Patent, '101 Patent, '398 Patent, '120 Patent, '145 Patent, '667 Patent, '985 Patent, '654 Patent, '970 Patent, '895 Patent, and '896 Patent are invalid and unenforceable due to incorrect inventorship such as nonjoinder or misjoinder of inventors.

**Defense 4: Not Entitled to Injunctive Relief**

Plaintiff is not entitled to injunctive relief under 35 U.S.C. § 283 as it has, at a minimum, no irreparable injury and has an adequate remedy at law.

**Defense 5: Failure to Mark**

Plaintiff is not entitled to pre-suit damages under 35 U.S.C. § 287 to the extent Plaintiff has failed to mark its products or provide actual pre-suit knowledge of infringement under 35 U.S.C. § 287.

**Defense 6: Statute of Limitations**

Plaintiff is not entitled to damages for any purported infringement committed more than six years prior to the filing of the complaint under 35 U.S.C. § 286.

**Defense 7: Equitable Bars**

Plaintiff's requested relief is barred, in whole or in part, under principles of equity, including without limitation, prosecution history estoppel, waiver, and/or equitable estoppel.

**Defense 8: Unenforceability (Inequitable Conduct)**

The claims of the '780 Patent, '398 Patent, '120 Patent, '145 Patent, '985 Patent, '654 Patent, '970 Patent, and '895 Patent are unenforceable due to inequitable conduct. Generac incorporates the allegations in the Factual Background and Twenty-Third Cause of Action in its Counterclaims by reference as if set forth fully herein.

**Defense 9: Unclean Hands**

Plaintiff's requested relief is barred, in whole or in part, due to unclean hands.

**Defense 10: Lack of Standing**

Plaintiff lacks standing to assert infringement of the '780 Patent, '101 Patent, '398 Patent, '120 Patent, '145 Patent, '667 Patent, '985 Patent, '654 Patent, '970 Patent, '895 Patent, and '896 Patent because it is not the owner or exclusive licensee of said patents.

**Defense 11: No Exceptional Case**

Plaintiff is not entitled to an exceptional case finding or an award of attorneys' fees under 35 U.S.C. § 285.

**COUNTERCLAIMS**

Counterclaim-Plaintiff GENERAC POWER SYSTEMS, INC. ("Generac") states its Counterclaims against Counterclaim-Defendant CHAMPION POWER EQUIPMENT, INC. ("Champion") as follows:

## INTRODUCTION

1. Generac's declaratory judgment Counterclaims arise because of Champion's alleged claims of patent infringement against Generac in this action and Champion's intentional withholding of material prior art during the prosecution of its patents with the intent to deceive the United States Patent and Trademark Office ("PTO"). Generac further asserts Counterclaims for Champion's infringement of Generac's patents.

## THE PARTIES

2. Generac is a Wisconsin corporation whose principal place of business is located at S45W29290 Highway 59, Waukesha, Wisconsin.

3. On information and belief, Champion Power Equipment, Inc. is a Nevada corporation whose principal place of business is in Las Vegas, Nevada.

## JURISDICTION AND VENUE

4. Generac's Counterclaims arise under the Declaratory Judgment Act, 28 U.S.C. §§ 2201, 2202, and the patent laws of the United States, 35 U.S.C. §§ 1 *et seq.*

5. The Court has subject matter jurisdiction over the declaratory judgment Counterclaims under 28 U.S.C. §§ 1331, 1338(a), and 2201(a). The Court may declare the rights and other legal relations of the parties pursuant to the Declaratory Judgment Act because this is a case of actual controversy within the Court's jurisdiction seeking declaratory judgment that the claims of the '780 Patent, '101 Patent, '398 Patent, '120 Patent, '145 Patent, '667 Patent, '985 Patent, '654 Patent, '970 Patent, '895 Patent, or '896 Patent (collectively, "the Champion Asserted Patents") are not infringed, are invalid, and are unenforceable. There exists a definite and concrete dispute within this Court's jurisdiction regarding the alleged infringement, validity, and enforceability of the Champion Asserted Patents because Champion has asserted infringement of the Champion Asserted Patents in this action.

6. The Court has jurisdiction over the subject matter of the patent infringement counterclaims pursuant to 28 U.S.C. §§ 1331 and 1338(a).

7. Champion has consented to the personal jurisdiction of this Court by filing this action in this judicial district. Additionally, the Court has personal jurisdiction over Champion because Champion is registered to do business in Wisconsin and may be served through its registered agent Greg Pauken located at W245N5551 S. Corporate Circle, Sussex, WI 53089. At the same address, Champion has a Wisconsin facility. Champion personally availed itself through conducting commercial activity in Wisconsin and in the United States because of its committed acts of patent infringement in Wisconsin.

8. Champion has consented to venue in this judicial district by filing this action in this judicial district. Additionally, venue is proper in this judicial district pursuant to 28 U.S.C. § 1400(b) because Champion has committed acts of patent infringement in this judicial district and has a regular and established place of business at W245N5551 S. Corporate Circle, Sussex, WI 53089.

## FACTUAL BACKGROUND

9. Generac is a leading innovator and designer of a wide range of energy technology products used for residential, commercial, and industrial applications in the United States and around the world. Among its various products, Generac makes and sells power generation, power storage, and power supply products and systems.

10. The Champion Asserted Patents belong to two patent families. First, the ’101 Patent, ’667 Patent, and ’896 Patent (collectively, “the 2013 Patent Family”) are part of the same patent family, all allegedly claiming priority to non-asserted U.S. Patent No. 9,435,273. Second, the ’780 Patent, ’398 Patent, ’120 Patent, ’145 Patent, ’985 Patent, ’654 Patent, ’970 Patent, and

’895 Patent (collectively, “the 2015 Patent Family”) are part of the same patent family, all allegedly claiming priority to the ’780 Patent.

11. Generac is the owner of certain patents directed to carbon monoxide detection (“the Generac Asserted Patents”), specifically, U.S. Patent No. 10,563,596 (the ’596 Patent) (EX 1) and the U.S. Patent No. 11,248,540 (the ’540 Patent) (EX 2).

12. Champion and Generac are both members of the Portable Generator Manufacturers’ Association (“PGMA”), an organization that seeks to develop safety standards for portable generators, including standards for carbon monoxide. (EX 3.) Champion personnel have long served on the Board of Directors and the Technical Committee of PGMA. (*See, e.g.*, EXs 4-5 (listing Greg Pauken and Dennis Lamberty of Champion as members of the Board of Directors and Technical Committee, respectively).)

13. PGMA regularly monitors and has knowledge of carbon monoxide patents for portable generators. Part of these activities includes members releasing a Patent Statement and Licensing Declaration Form, and both Generac and Champion have released Declaration Forms to PGMA related to carbon monoxide patents. (*See* EX 6.) Thus, PGMA would have come across the ’596 Patent and the ’540 Patent during PGMA’s regular monitoring, and therefore put Champion on notice of both Generac’s ’596 and ’540 Patents since Champion and Generac actively participated in releasing declarations regarding carbon monoxide patents.

14. PGMA has explicitly referenced Generac’s ’596 Patent on its website since at least July 6, 2022, putting Champion on actual notice since then. (EX 6.)

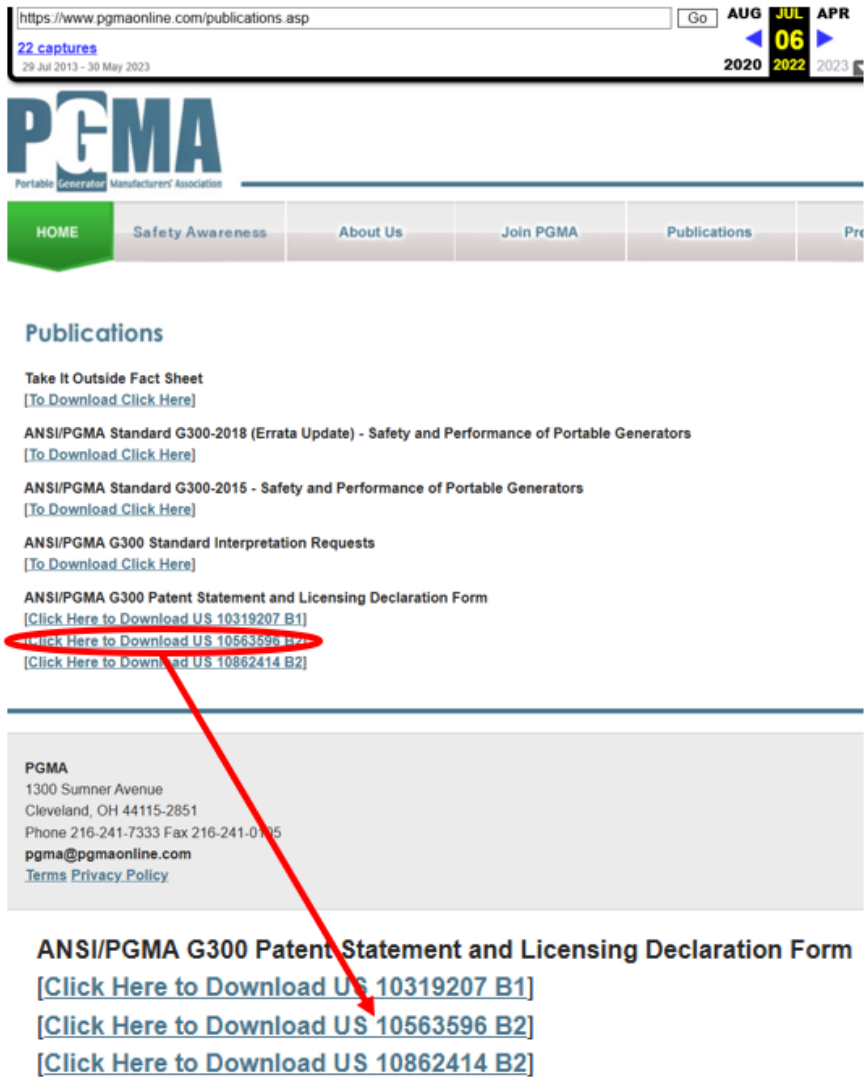


## Champion Infringes the Generac Asserted Patents

15. Generac leads the industry in its patent-protected carbon monoxide detection and automatic shutoff systems in internal combustion engines, such as generators, under the trademark designation "COsense." Generac's COsense Technology is the result of years of research and development, and it allows industry leading safety in automatically shutting down a generator upon detection of hazardous levels of carbon monoxide. A suite of patents protects Generac's COsense Technology, including the '596 Patent and the '540 Patent.

16. Champion makes, uses, imports, offers for sale, and/or sells portable generators and inverters that contain carbon monoxide detection and automatic shutoff systems in the United States. Most, if not all, of Champion's portable generators with a carbon monoxide detection and automatic shutoff systems are marketed under the trademarked name "CO Shield" (EX 7.)

17. Champion has at least 106 different products listed on Champion's website that have the "CO Shield" designation ("the Champion CO Shield Products"). Champion additionally has a press release that states Champion is "equipping and transitioning all models manufactured after January 1, 2023 in its portable generator lineup with CO Shield[.]" (EX 8.)

(EX 9.)

(EX 10.)

(EX 11.)

18. On information and belief, the Champion CO Shield Products all use the same technology—namely, Champion's "CO Shield Technology"—to detect carbon monoxide and automatically shut off the engine. (*See* EX 12.)

19. Champion makes, uses, imports, offers for sale, and/or sells at least the exemplary 9200W Electric Start Dual Fuel Generator with CO Shield, 3650W Dual Fuel Generator with CO Shield, and 3650W Wireless Start Generator with CO Shield products in the United States.

20. Champion's CO Shield products, including at least the exemplary Champion CO Shield Products 9200W Electric Start Dual Fuel Generator with CO Shield, 3650W Dual Fuel Generator with CO Shield, and 3650W Wireless Start Generator with CO Shield infringe at least claim 1 of the '596 Patent and at least claim 19 of the '540 Patent.

**The Champion CO Shield Generators infringe at least Claim 1 of the '596 Patent**

21. U.S. Patent No. 10,563,596 ("the '596 Patent") has the title "CARBON MONOXIDE DETECTING SYSTEM FOR INTERNAL COMBUSTION ENGINE-BASED MACHINES." The '596 Patent was legally and duly issued from U.S. Application No. 15/942,203 on February 18, 2020. Generac owns all right, title, and interest in the '596 Patent.

22. At least the exemplary Champion CO Shield Products 9200W Electric Start Dual Fuel Generator with CO Shield, 3650W Dual Fuel Generator with CO Shield, and 3650W Wireless Start Generator with CO Shield infringe at least claim 1 of the '596 Patent, which reads:

- An internal combustion engine-based system comprising: an internal combustion engine; an engine interrupt connected to the engine, wherein the engine interrupt is configured to selectively stop the operation of the engine; a controller in communication with the engine interrupt; and a carbon monoxide detector in communication with the controller, wherein the controller uses the engine interrupt to stop the operation of the engine when the carbon monoxide detector provides the controller with signals that are representative of a carbon monoxide level proximate the internal combustion engine that together form a trend of building carbon monoxide amounts over a set time interval.

23. Specifically, the Champion 9200W Electric Start Dual Fuel Generator with CO Shield infringes claim 1 of the ’596 Patent as follows:

- The Champion 9200W Electric Start Dual Fuel Generator with CO Shield is an internal combustion engine-based system that contains an internal combustion engine. The Champion 9200W Electric Start Dual Fuel Generator with CO Shield has an engine interrupt connected to the engine, with the engine interrupt configured to selectively stop the operation of the engine. Specifically, referring to the annotated figured below, the engine interrupt (orange) is in communication with the controller (green) of the Champion 9200W Electric Start Dual Fuel Generator with CO Shield and connected to the engine (blue) to stop operation of the engine. Champion 9200W Electric Start Dual Fuel Generator with CO Shield has a carbon monoxide detector in communication with the controller. The controller uses the engine interrupt to stop the operation of the engine when the carbon monoxide detector has signals that exceed a given level of carbon monoxide over a time interval. Specifically, the carbon monoxide detector provides signals to the controller that are representative of a carbon monoxide level proximate the internal combustion engine that together form a trend of building carbon monoxide amounts over a set time interval.

A. **CO Shield® LED** – The CO Shield® technology monitors for accumulation of poisonous carbon monoxide (CO) gas produced by engine exhaust when the generator is running. If CO Shield® detects elevated levels of CO gas, it automatically shuts off the engine.

(EX 13 at 15.)

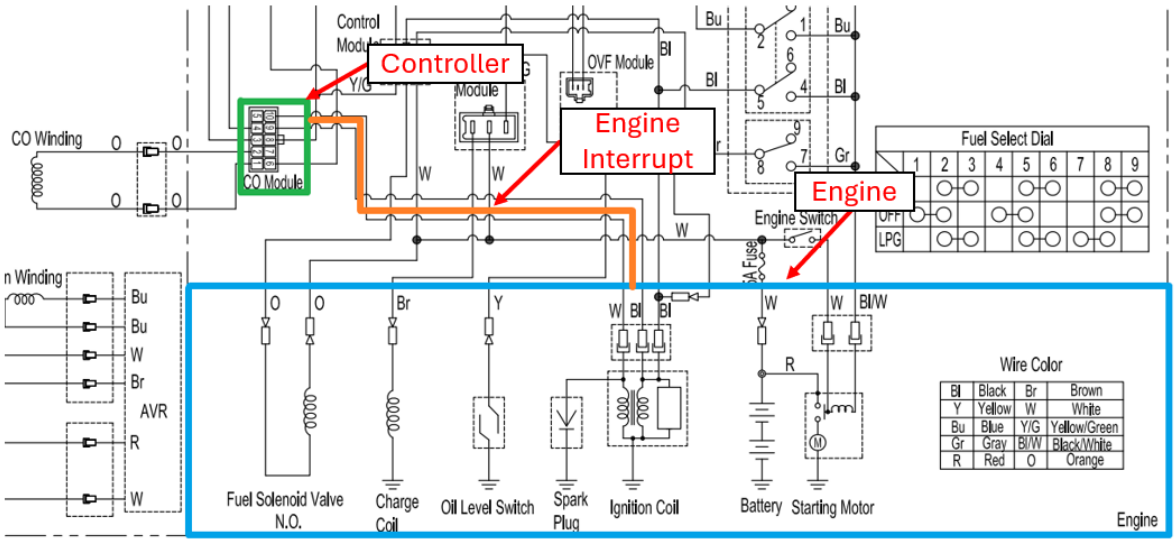


(EX 14 at 20.)

24. The exemplary Champion CO Products 3650W Dual Fuel Generator with CO Shield, and 3650W Wireless Start Generator with CO Shield infringe in the same manner the Champion 9200W Electric Start Dual Fuel Generator with CO Shield infringes claim 1 of the ’596 Patent.

25. On information and belief, Champion has had knowledge of the ’596 Patent through its participation in PGMA. Additionally, Champion has had actual notice of the ’596 Patent at least as early as May 15, 2025 through the filing of this First Amended Answer to Plaintiff’s Complaint and Demand for a Jury Trial and Counterclaims.

26. On information and belief, Champion’s infringement has been, and is, willful and deliberate.

**The Champion CO Shield Generators infringe at least Claim 19 of the ’540 Patent**

27. U.S. Patent No. 11,248,540 has the title “CARBON MONOXIDE DETECTING SYSTEM FOR INTERNAL COMBUSTION ENGINE-BASED MACHINES.” The ’540 Patent was legally and duly issued from U.S. Application No. 16/707,621 on December 9, 2019. Generac owns all right, title, and interest in the ’540 Patent.

28. At least the exemplary Champion CO Shield Products 9200W Electric Start Dual Fuel Generator with CO Shield, 3650W Dual Fuel Generator with CO Shield, and 3650W Wireless Start Generator with CO Shield infringe at least claim 19 of the ’540 Patent, which reads:

- An internal combustion engine-based system comprising: an internal combustion engine; an engine interrupt connected to the engine, wherein the engine interrupt is configured to selectively stop the operation of the engine; a controller in communication with the engine interrupt; a carbon monoxide detector in communication with the controller, the carbon monoxide detector configured to communicate carbon monoxide values representative of the

carbon monoxide levels in the environment immediately surrounding the internal combustion engine; and at least one additional sensor in communication with the controller, the at least one additional sensor being one of a group comprising a temperature sensor, a humidity sensor, a proximity sensor, an accelerometer, and/or a timer, and wherein the controller determines if the internal combustion engine is exposed to an undesirable environment based at least in part on the signals received from the at least one additional sensor.

29. Specifically, the Champion 9200W Electric Start Dual Fuel Generator with CO Shield infringes claim 19 of the ’540 Patent as follows:

- The Champion 9200W Electric Start Dual Fuel Generator with CO Shield is an internal combustion engine-based system that contains an internal combustion engine. The Champion 9200W Electric Start Dual Fuel Generator with CO Shield has an engine interrupt connected to the engine, with the engine interrupt configured to selectively stop the operation of the engine. Specifically, referring to the annotated figured below, the engine interrupt (orange) is in communication with the controller (green) of the Champion 9200W Electric Start Dual Fuel Generator with CO Shield and connected to the engine (blue) to stop operation of the engine. The Champion 9200W Electric Start Dual Fuel Generator with CO Shield has a carbon monoxide detector in communication with the controller. The controller uses the engine interrupt to stop the operation of the engine when the carbon monoxide detector communicates carbon monoxide values that exceed a given level over a time interval. Specifically, the

carbon monoxide detector provides signals to the controller that are representative of a carbon monoxide values in the environment immediately surrounding the internal combustion engine that together form a trend of building carbon monoxide amounts over a set time interval. The microcontrollers within the Champion 9200W Electric Start Dual Fuel Generator with CO Shield have built-in timers, and the controller (green) has one such microcontroller. The Champion 9200W Electric Start Dual Fuel Generator with CO Shield is designed to take readings over time to detect if the carbon monoxide levels are too high, particularly with carbon monoxide levels being measured over time using the built-in timer. If indoors or another undesirable location, the levels of carbon monoxide would rise more easily and render the environment undesirable.

A. **CO Shield® LED** – The CO Shield® technology monitors for accumulation of poisonous carbon monoxide (CO) gas produced by engine exhaust when the generator is running. If CO Shield® detects elevated levels of CO gas, it automatically shuts off the engine.

(EX 13 at 15.)

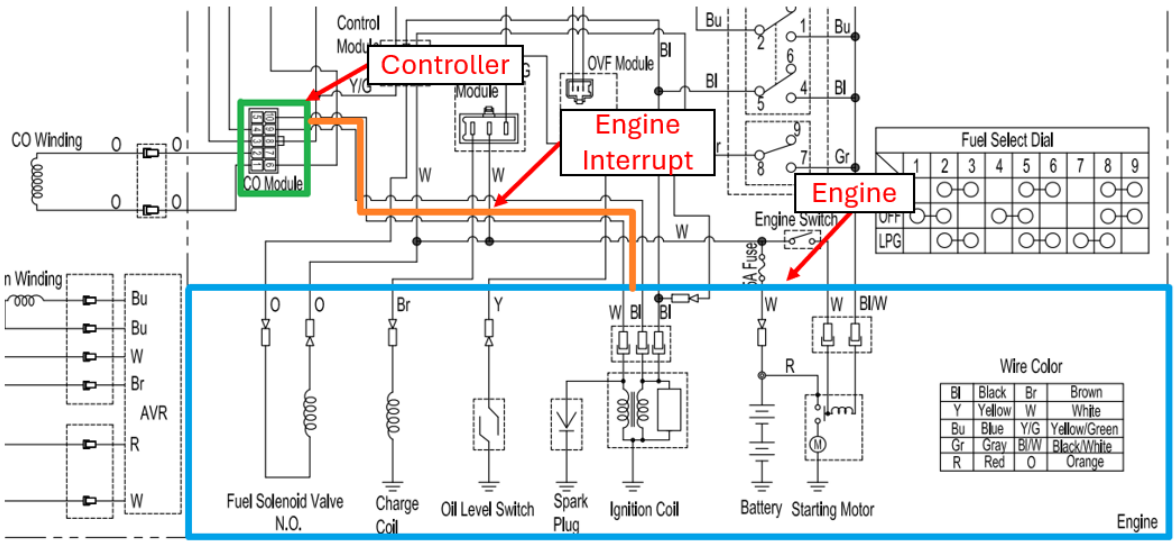


(EX 14 at 20.)

30. The exemplary Champion CO Products 3650W Dual Fuel Generator with CO Shield, and 3650W Wireless Start Generator with CO Shield infringe in the same manner the Champion 9200W Electric Start Dual Fuel Generator with CO Shield infringes claim 19 of the ’540 Patent.

31. On information and belief, Champion has had knowledge of the ’540 Patent through its participation in PGMA. Additionally, Champion has had actual notice of the ’540 Patent at least as early as May 15, 2025 through the filing of this First Amended Answer to Plaintiff’s Complaint and Demand for a Jury Trial and Counterclaims.

32. On information and belief, Champion’s infringement has been, and is, willful and deliberate.

## Generac Does Not Infringe the Champion 2013 Patent Family

33. The Generac Accused Generators do not infringe any of the asserted claims of the 2013 Patent Family at least because they lack one or more elements of the asserted claims.

34. Each patent in the 2013 Patent Family is titled "Dual Fuel Selector Switch." A dual fuel generator is a generator that can be powered by two different fuels. The shared specification of the 2013 Patent Family discloses that typical prior art dual fuel generators utilized separately actuatable valves for each fuel type to control fuel flow to the engine. The specification explains that because a user could actuate each valve independently, the user could inadvertently leave both valves open simultaneously such that both fuels would flow into the engine simultaneously.

35. To allegedly solve the stated problem in the prior art, the 2013 Patent Family is directed at a "selector switch" that selectively covers the valve actuation mechanisms so that they are locked in place and inaccessible to the user. Because only one of the valve actuation mechanisms is user-accessible at any given time, only one fuel can flow at a time.

36. Claim 1 of the '101 Patent is exemplary of the asserted claims in the 2013 Patent Family. It requires "a valve assembly . . . operable to selectively control a first fuel flow and a second fuel flow" and a "selector switch positioned on the valve assembly to allow a user to manually select one of the first fuel flow and the second fuel flow."

37. The shared specification discloses that the valve assembly is comprised of two valves and corresponding valve handles that control the actuation of the valves, shown below in blue:

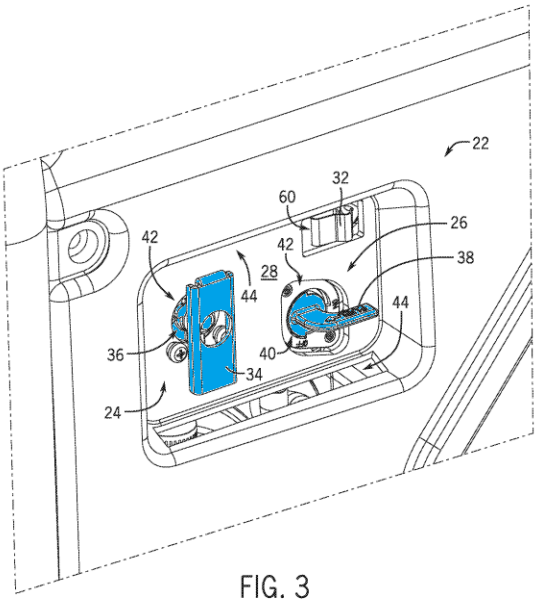


FIG. 3

38. The specification further discloses that the "selector switch" and valve assembly are distinct structures. The "selector switch" (yellow) and valve assembly (blue) are shown below:

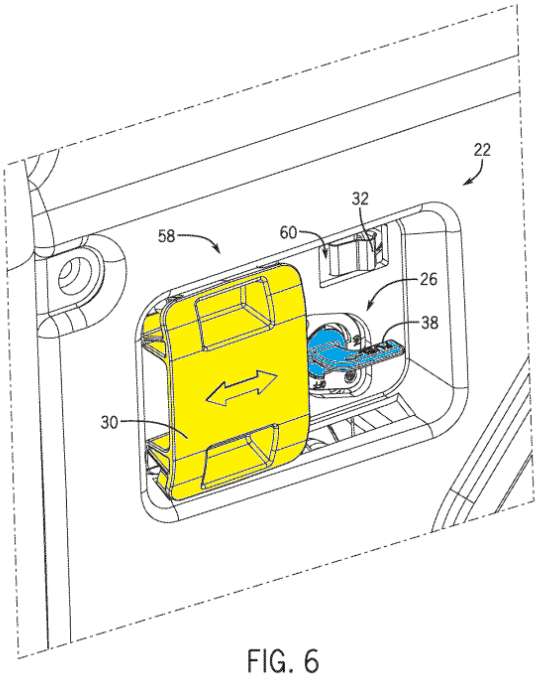


FIG. 6

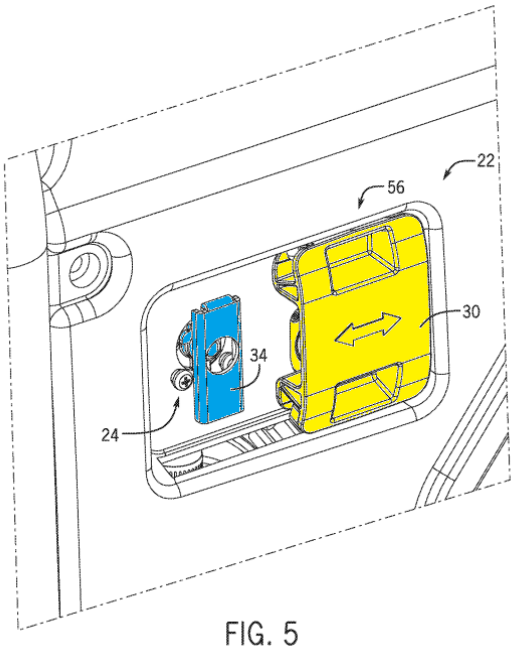


FIG. 5

39. This is confirmed by the prosecution history of the 2013 Patent Family. For example, in an Appeal Brief filed by Champion during prosecution of the '101 Patent arguing over patent application claim rejections, Champion explained that the valve assembly is comprised of at least one valve and at least one associated valve handle:

> [T]he Specification of the present application clearly illustrates and describes that the claimed "valve assembly" is comprised of one or more of first valve assembly 24 and second valve assembly 26 – with the first valve assembly 24 including a first fuel valve handle 34 that is operatively connected to a first fuel valve 36 to control an opening and closing of the first fuel valve and the second valve assembly 26 including a second fuel valve handle 38 that is operatively connected to a second fuel valve 40 to control an opening and closing of the second fuel valve.

(EX 15 at 177-178.)

40. On the same page of the Appeal Brief, Champion stated that the "selector switch" and valve assembly must be separate structures:

> [C]laim 1 distinctly calls for <u>a valve assembly</u> and <u>a selector switch</u> as two separate and distinct elements/structures – with claim 1 clearly and separately defining each of these elements and setting forth a relationship therebetween. These elements should not be confused with one another, as the Examiner has attempted to do.

(*Id.* at 178-179 (emphasis in original).)

41. As disclosed in the shared specification, the valve assembly and "selector switch" accomplish distinct functions. The valve handles of the valve assembly are operated by the user to control separately actuatable valves—and as explained in the specification, this was well-known in prior art dual fuel generators. The "selector switch" selectively covers the valve handles so that they are locked in place and inaccessible to the user. In doing so, the "selector switch" selectively inhibits user actuation of the valve controlled by the covered and locked valve handle.

42. Generator Models PM4500DF, PM7500DF, GP7500E, DF3500E, and DF7500E ("the Generac Accused Generators") do not infringe any of the asserted claims of the 2013 Patent Family at least because they lack one or more elements of the asserted claims.

43. For example, the Generac Accused Generators either lack a "selector switch" or a valve handle disclosed in the specification and claimed as part of the valve assembly.

44. The "selector switch" and valve handle are distinct external structures manually actuated by the user. The only external structure on each of the Generac Accused Generators that could comprise the "selector switch" or valve handle is a single dial.

45. This dial is shown below for the PM4500DF.

(EX 16; *see also* EX 17.)

46. The dial of the PM7500DF is shown below:

(EX 18; *see also* EX 19.)

47. The dial of the GP7500E is shown below:

(EX 20; *see also* EX 21.)

48. The dial of the DF3500E is shown below:

(*See* EX 22.)

49. The dial of the DF7500E is shown below:

(*See id.*)

50. The Generac Accused Generators cannot infringe exemplary Claim 1 of the ’101 Patent because the dial on the Generac Accused Generators cannot satisfy multiple discrete claim elements.

51. To the extent Champion maintains that the dial is a “selector switch,” the Generac Accused Generators do not infringe the claims of the 2013 Patent Family because they lack any separate structure that could be construed as the valve handles that are selectively covered or exposed by the “selector switch.”

52. Conversely, to the extent Champion maintains that the dial is a valve handle or other necessary component of the valve assembly, the Generac Accused Generators do not infringe the claims of the 2013 Patent Family because the lack any separate structure that could be construed as a “selector switch.”

**<u>The Patents of the Champion 2013 Patent Family are Invalid</u>**

53. The 2013 Patent Family is invalid under at least 35 U.S.C. § 103 at least because the claims are obvious in view of U.S. Patent No. 4,492,207 to Hallberg (“Hallberg”) under

Champion's apparent claim construction underlying its assertion of infringement against the Generac Accused Generators.

54. Hallberg was filed on February 27, 1981, and published on January 8, 1985. Hallberg qualifies as prior art to the entire 2013 Champion Patent Family under 35 U.S.C. § 102.

55. Hallberg is titled "Dual Fuel System" and discloses a dual fuel system for use with internal combustion engines with manually actuated fuel valves.

56. Under Champion's apparent claim construction underlying its assertion of infringement against the Generac Accused Generators, Hallberg discloses every element of at least one claim of every patent in the 2013 Patent Family except for the use of the fuel selector in a dual fuel generator. It would be obvious to a person of ordinary skill to adapt the teachings of Hallberg to a dual fuel generator.

57. Under Champion's apparent claim construction underlying its assertion of infringement against the Generac Accused Generators, Hallberg discloses every element of at least the following claims of the '101 Patent, other than use in a dual fuel generator:

a. Independent claim 1 by specifically including a fuel selector, the fuel selector comprising: a valve assembly fluidly connected to each of a first fuel source and a second fuel source, the valve assembly being operable to selectively control a first fuel flow and a second fuel flow from the first fuel source and the second fuel source, respectively, to an engine; and a selector switch positioned on the valve assembly to allow a user to manually select one of the first fuel flow and the second fuel flow; wherein the valve assembly comprises: a first fuel valve having open and closed positions to selectively control the first fuel flow to the engine; and a second fuel valve having open and closed positions to selectively control the second fuel flow to the engine; and wherein the first fuel valve and the second fuel valve are mechanical valves, as called for in claim 1 of U.S. Patent No. 10,598,101.

b. Dependent claim 2 by specifically including all the aforementioned elements of claim 1 and, in addition, wherein the selector switch provides for manual actuation of the first fuel valve and the second fuel valve between the open and closed positions, as called for in claim 2 of U.S. Patent No. 10,598,101.

c. Dependent claim 8 by specifically including all the aforementioned elements of claim 1 and, in addition, wherein the first fuel valve is attached to a liquefied petroleum gas (LPG) fuel source and wherein the second fuel valve is attached to a gasoline source, as called for in claim 8 of U.S. Patent No. 10,598,101.

d. Dependent claim 9 by specifically including all the aforementioned elements of claim 1 and, in addition, wherein the mechanical valve of each of the first fuel valve and the second fuel valve is a non-solenoid valve, as called for in claim 9 of U.S. Patent No. 10,598,101.

e. Independent claim 18 by specifically including a fuel selector, the fuel selector comprising: a valve assembly fluidly connected to each of a first fuel source and a second fuel source, the valve assembly being operable to selectively control a first fuel flow and a second fuel flow from the first fuel source and the second fuel source, respectively, to an engine; and a selector switch positioned on the valve assembly to allow a user to manually select one of the first fuel flow and the second fuel flow; wherein the valve assembly comprises: two fuel inputs, with a first fuel input connected to the first fuel source and a second fuel input connected to the second fuel source; and two fuel outputs supplying fuel from only one of the first fuel source or the second fuel source, wherein the valve assembly comprises a first fuel valve having open and closed positions to selectively control the first fuel flow to the engine; and a second fuel valve having open and closed positions to selectively control the second fuel flow to the engine, as called for in claim 18 of U.S. Patent No. 10,598,101.

f. Dependent claim 19 by specifically including all the aforementioned elements of claim 18 and, in addition, wherein the first fuel valve and the second fuel valve are non-solenoid, mechanical valves, as called for in claim 19 of U.S. Patent No. 10,598,101.

58. Under Champion's apparent claim construction underlying its assertion of infringement against the Generac Accused Generators, Hallberg discloses every element of at least the following claims of the '667 Patent, other than use in a dual fuel generator:

a. Independent claim 1 by specifically including a fuel selector, the fuel selector a selector having a valve assembly fluidly connected to each of a first fuel source and a second fuel source, being operable to selectively control a first fuel flow and a second fuel flow from the first fuel source and the second fuel source, respectively, to an engine, and including two fuel inputs, with a first fuel input connected to the first fuel source and a second fuel input connected to the second fuel source, and two fuel outputs for selectively supplying fuel to an engine from the first fuel source or the second fuel source; and a selector switch positioned on the valve assembly

to allow a user to manually select one of the first fuel flow and the second fuel flow, as called for in claim 1 of U.S. Patent No. 11,306,667.

b. Dependent claim 2 by specifically including all the aforementioned elements of claim 1 and, in addition, the two fuel outputs selectively supply fuel to the engine from only one of the first fuel source or the second fuel source, responsive to selection of the first fuel flow or the second fuel flow via the selector switch, and a corresponding operation of the valve assembly, as called for in claim 2 of U.S. Patent No. 11,306,667.

c. Dependent claim 3 by specifically including all the aforementioned elements of claim 1 and, in addition, the valve assembly has a first fuel valve having open and closed positions to selectively control the first fuel flow to the engine and a second fuel valve having open and closed positions to selectively control the second fuel flow to the engine, as called for in claim 3 of U.S. Patent No. 11,306,667.

d. Dependent claim 5 by specifically including all the aforementioned elements of claim 3 and, in addition, wherein the selector switch provides for manual actuation of the first fuel valve and the second fuel valve between the open and closed positions, as called for in claim 5 of U.S. Patent No. 11,306,667.

e. Dependent claim 9 by specifically including all the aforementioned elements of claim 1 and, in addition, the first fuel source is an LPG fuel source and wherein the second fuel source is a gasoline source, as called for in claim 9 of U.S. Patent No. 11,306,667.

59. Under Champion's apparent claim construction underlying its assertion of infringement against the Generac Accused Generators, Hallberg discloses every element of at least the following claims of the '896 Patent, other than use in a dual fuel generator:

a. Independent claim 7 by specifically including a fuel selector, the fuel selector comprising: a valve assembly fluidly couplable to each of a first fuel source and a second fuel source and operable to selectively control a first fuel flow and a second fuel flow from the first fuel source and the second fuel source, respectively, to an engine, the valve assembly comprising: a first mechanical fuel valve having open and closed positions to selectively control the first fuel flow to the engine; and a second mechanical fuel valve having open and closed positions to selectively control the second fuel flow to the engine; and a selector switch movable with respect to the valve assembly to allow a user to manually select the first fuel flow or the second fuel flow, as called for in claim 7 of U.S. Patent No. 11,905,896.

b. Dependent claim 8 by specifically including all the aforementioned elements of claim 7 and, in addition, wherein the selector switch provides for manual actuation of the first fuel valve and the second fuel valve between the open and closed positions, as called for in claim 8 of U.S. Patent No. 11,905,896.

c. Dependent claim 14 by specifically including all the aforementioned elements of claim 7 and, in addition, wherein: the first fuel valve is couplable to a liquefied petroleum gas (LPG) fuel source; and the second fuel valve is couplable to a gasoline source, as called for in claim 14 of U.S. Patent No. 11,905,896.

d. Independent claim 15 by specifically including a fuel selector, the fuel selector comprising: a valve assembly fluidly couplable to each of a first fuel source and a second fuel source and operable to selectively control a first fuel flow and a second fuel flow from the first fuel source and the second fuel source, respectively, to an engine, the valve assembly comprising: a first fuel valve having open and closed positions to selectively control the first fuel flow to the engine; and a second fuel valve having open and closed positions to selectively control the second fuel flow to the engine; and at least one valve handle mechanically coupled to the first fuel valve and the second fuel valve to selectively open and close the first fuel valve and the second fuel valve responsive to actuation thereof so as to enable the first fuel flow to the engine or the second fuel flow to the engine, as called for in claim 15 of U.S. Patent No. 11,905,896.

e. Dependent claim 16 by specifically including the all the aforementioned elements of claim 15 and, in addition, wherein the at least one valve handle enables only one of the first and second fuel flows to the engine at a given time, as called for in claim 36 of U.S. Patent No. 11,905,896.

f. Independent claim 30 by specifically including a fuel selector, the fuel selector comprising: a valve assembly fluidly couplable to each of a first fuel source and a second fuel source and operable to selectively control a first fuel flow and a second fuel flow from the first fuel source and the second fuel source, respectively, to an engine, the valve assembly comprising: two fuel inputs comprising: a first fuel input couplable to the first fuel source; and a second fuel input couplable to the second fuel source; and two fuel outputs configured to selectively supply fuel to the engine from the first fuel source or the second fuel source; and a selector switch positioned on the valve assembly to allow a user to manually select the first fuel flow or the second fuel flow, as called for in claim 30 of U.S. Patent No. 11,905,896.

g. Dependent claim 31 by specifically including all the aforementioned elements of claim 30 and, in addition, wherein the two fuel outputs are configured to selectively supply fuel to the engine from only one of the first

and second fuel sources responsive to selection of the first fuel flow or the second fuel flow via the selector switch and a corresponding operation of the valve assembly, as called for in claim 31 of U.S. Patent No. 11,905,896.

h. Dependent claim 32 by specifically including all the aforementioned elements of claim 30 and, in addition, wherein the valve assembly comprises: a first fuel valve having open and closed positions to selectively control the first fuel flow to the engine; and a second fuel valve having open and closed positions to selectively control the second fuel flow to the engine, as called for in claim 32 of U.S. Patent No. 11,905,896.

i. Dependent claim 34 by specifically including all the aforementioned elements of claim 32 and, in addition, wherein the first fuel valve and the second fuel valve are non-solenoid, mechanical valves, as called for in claim 34 of U.S. Patent No. 11,905,896.

j. Dependent claim 35 by specifically including all the aforementioned elements of claim 32 and, in addition, wherein the selector switch provides for manual actuation of the first fuel valve and the second fuel valve between the open and closed positions, as called for in claim 35 of U.S. Patent No. 11,905,896.

60. It would be obvious to a person of ordinary skill to use Hallberg's dual fuel engine to power a dual fuel generator. It would be obvious to a person of ordinary skill to adapt the teachings of Hallberg, which permits only one fuel flow to a dual fuel engine at time, to a dual fuel generator. In the prosecution history of the 2013 Patent Family, the Examiner stated that it would be obvious to use prior art dual fuel engines in a dual fuel generator. (EX 15 at 265.)

**Generac Does Not Infringe the Champion 2015 Patent Family**

61. The Generac Accused Generators do not infringe any of the asserted claims of the 2015 Patent Family at least because they lack one or more elements of the asserted claims.

62. For example, claim 1 of the '780 Patent requires "a mechanical fuel valve actuateable . . . to selectively control fuel flow to the dual fuel engine from a first fuel source through a first fuel line and a second fuel source through a second fuel line."

63. The Generac Accused Generators do not infringe at least claims 1, 8, and 15 of the '780 Patent; claim 6 of the '654 Patent; claims 1 and 20 of the '970 Patent; and claims 1, 8, and

14 of the ’895 Patent, because they lack at least a mechanical fuel valve actuatable to selectively control fuel flow from a first fuel source and a second fuel source.

64. Champion’s own pleadings state that the Generac Accused Generators contain “a first fuel valve having open and closed positions to selectively control the first fuel flow to the engine; and a second fuel valve having open and closed positions to selectively control the second fuel flow to the engine.” *See, e.g.*, Dkt. 1 at ¶¶ 25, 27.

65. Based on Champion’s own pleadings, the Generac Accused Generators lack a mechanical fuel valve that selectively controls fuel flow from both a first and second fuel source.

66. Claim 1 of the ’780 Patent further requires a “fuel lockout apparatus” that “is configured to prevent the second fuel source from coupling to the second fuel line while the mechanical fuel valve is in the first position.” The claimed “fuel lockout apparatus” is depicted in Figs. 2 and 3 (below) by references number 58 (orange). (Dkt. 1-1 at Claim 1, Figs. 2-3.)

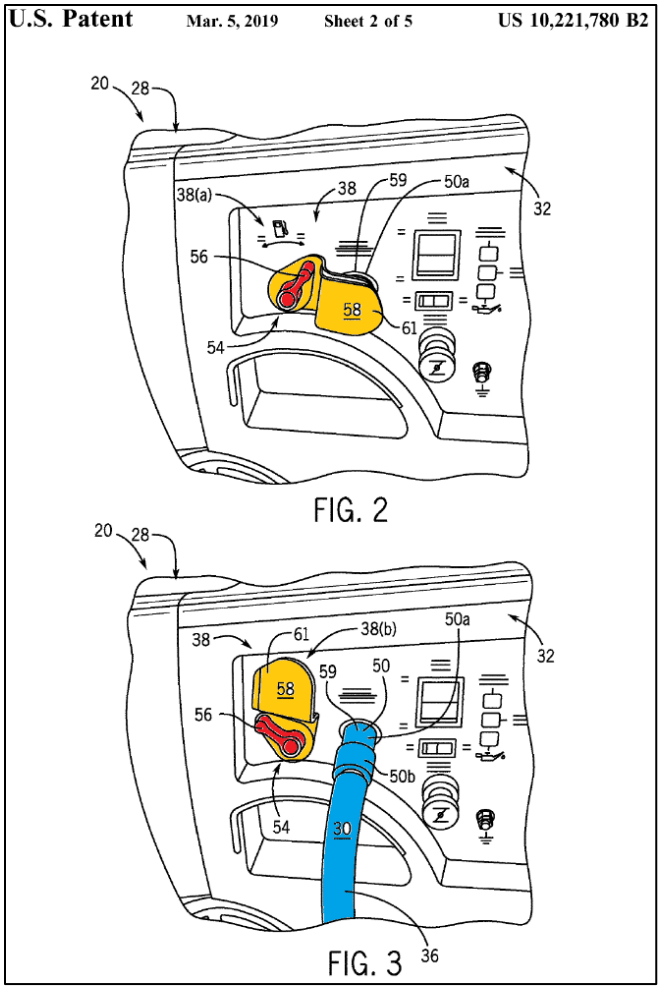


(*Id*. at Figs. 2-3 (annotated).) Claim 1 of the ’780 patent claims a fuel lockout apparatus 58 (orange) coupled to the fuel valve handle 56 (red), which physically blocks the liquid propane hose (blue) from being connected to the generator when the fuel valve is switched to gasoline. (Dkt. 1-1 at Col. 5:52-6:31.) Thus, when the fuel valve handle 56 (red) is switched to gasoline (as shown in Figure 2), the propane hose (blue) cannot be connected to the generator because access to where the propane hose connects is physically blocked by the fuel lockout apparatus 58 (orange).

67. The Generac Accused Generators do not infringe at least claims 1 and 8 of the ’780 Patent; claim 6 of the ’654 Patent; and claims 1 and 14 of the ’895 Patent, at least because they at least lack a fuel lockout apparatus configured to prevent the second fuel source from coupling to the second fuel line.

68. Claim 16 of the ’985 Patent requires “a fuel regulator system located off board the dual fuel generator comprising a primary pressure regulator . . . to regulate the fuel to a first reduced pressure; and a secondary pressure regulator . . . to regulate the gaseous fuel . . . to a second reduced pressure . . . wherein the fuel regulator system outputs gaseous fuel to the dual fuel generator for operation thereof at the second reduced pressure.”

69. Claim 12 of the ’120 Patent requires “a fuel regulator system comprising: . . . a primary pressure regulator . . . to regulate fuel supplied from the pressured fuel source to a reduced pressure, and a secondary pressure regulator . . . to regulate fuel supplied from the primary pressure regulator to a desired pressure for delivery through the gaseous fuel line to operate the engine.”

70. The Generac Accused Generators do not infringe at least claim 16 of the ’985 Patent and claim 12 of the ’120 Patent, at least because they include an on-board regulator such that the operation of the Generac Accused Generators is not at the second reduced pressure.

71. Claim 43 of the ’398 Patent requires “a fuel shutoff . . . wherein the fuel shutoff actuates free from linear motion.” Claim 11 of the ’145 Patent requires “a manually actuated fuel shutoff . . . comprising: . . . a second end external to the carburetor to actuate the first end.”

72. The Generac Accused Generators do not infringe at least claim 43 of the ’398 Patent. To the extent the Generac Accused Generators contain a fuel shutoff, their actuation involves linear motion.

73. The Generac Accused Generators do not infringe at least claim 43 of the ’398 Patent and claim 11 of the ’145 Patent. To the extent the Generac Accused Generators contain a fuel shutoff, neither end of the fuel shutoff is external to the fuel carburetor.

**<u>The Patents of the Champion 2015 Patent Family are Invalid</u>**

74. The 2015 Patent Family is invalid under at least 35 U.S.C. §§ 102 or 103 because at least one claim in each of the patents is anticipated by or rendered obvious by Champion’s dual

fuel generator model 100153, alone or in combination with U.S. Patent No. 9,435,273 ("the '273 Patent"), under Champion's apparent claim construction underlying its assertion of infringement against the Generac Accused Generators.

75. Champion announced and described a new line of dual fuel generator models in a May 2, 2014, press release. (EX 23.) Champion released an operator's manual for the new line of dual fuel generator models on or before May 2, 2014. (*Id.*)

76. On information and belief, the Champion dual fuel generator model 100153 is one of the dual fuel generator models announced in the May 2, 2014, press release.

77. On information and belief, Champion dual fuel generator model 100153 was sold before June 12, 2014.

78. An operator's manual for Champion dual fuel generator model 100153 (EX 24) was cited as prior art during prosecution of the '780 Patent and is listed as prior art on the face of the '780 Patent. Champion did not contest that the Champion dual fuel generator model 100153 manual was prior art under 35 U.S.C. § 102 during the prosecution of the '780 Patent.

79. Champion dual fuel generator model 100153 and manuals describing the same are prior art to the 2015 Patent Family under 35 U.S.C. § 102.

80. The '273 Patent is the parent of the 2013 Patent Family and was filed on November 1, 2013. The '273 Patent was filed more than one year before the earliest priority date for each patent in the 2015 Patent Family.

81. The '273 Patent is prior art to the 2015 Patent Family under 35 U.S.C. § 102.

82. Champion dual fuel generator model 100153 is a commercial embodiment of the 2013 Patent Family and 2015 Patent Family.

83. A person of ordinary skill would be motivated to combine the ’273 Patent with its commercial embodiment Champion dual fuel generator model 100153.

84. The ’273 Patent discloses every element of at least one asserted claim of each patent in the 2015 Patent Family under Champion’s apparent claim construction underlying its assertion of infringement against the Generac Accused Generators. To the extent the ’273 Patent does not explicitly disclose every element, the remaining elements are disclosed in Champion dual fuel generator model 100153, which is a commercial embodiment of both the 2013 Patent Family and 2015 Patent Family.

85. Under Champion’s apparent claim construction underlying its assertion of infringement against the Generac Accused Generators, the Champion dual fuel generator model 100153, alone and/or in combination with the ’273 Patent, discloses every element of at least the following claim of the ’780 Patent:

a. Independent claim 1 by specifically including a mechanical fuel lockout switch for a dual fuel engine having a mechanical fuel valve actuatable between a first position and a second position to selectively control fuel flow to the dual fuel engine from a first fuel source through a first fuel line and a second fuel source through a second fuel line and a fuel lockout apparatus coupled to the mechanical fuel valve, wherein the mechanical fuel lockout switch communicates the first fuel source to the dual fuel engine and prevents communication between the second fuel source and the dual fuel engine when the mechanical fuel valve is in the first position and communicates the second fuel source to the dual fuel engine and interrupts the first fuel source communication with the dual fuel engine when in the second position and wherein the fuel lockout apparatus is configured to prevent the second fuel source from coupling to the second fuel line while the mechanical fuel valve is in the first position and permit the second fuel source to couple to the second fuel line while the mechanical fuel valve is in the second position, as called for in claim 1 of U.S. Patent No. 10,221,780.

86. Under Champion’s apparent claim construction underlying its assertion of infringement against the Generac Accused Generators, the Champion dual fuel generator model

100153, alone and/or in combination with the ’273 Patent, discloses every element of at least the following claims of the ’398 Patent:

a. Independent claim 1 by specifically including a dual fuel engine comprising: an engine operable on a gaseous fuel and a liquid fuel; a switch to change operation of the engine between gaseous fuel and liquid fuel; a carburetor attached to an intake of the engine to mix air and fuel and connect to a gaseous fuel source and a liquid fuel source; a liquid fuel valve positioned along a liquid fuel line coupling the liquid fuel source to the carburetor; a gaseous fuel valve positioned along a gaseous fuel line coupling the gaseous fuel source to the carburetor; and a liquid fuel cut-off incorporated into the carburetor to interrupt liquid fuel upon actuation of the switch from liquid fuel to gaseous fuel, as called for in claim 1 of U.S. Patent No. 10,697,398.

b. Independent claim 57 by specifically including a method of assembling a dual fuel engine comprising: providing an engine operable on a gaseous fuel and a liquid fuel; attaching a carburetor to an intake of the engine, the carburetor comprising: a throat to mix gaseous fuel with air and liquid fuel with air, a float bowl, and a fuel passage extending from the float bowl to the throat to provide liquid fuel; coupling a switch to the engine to change operation of the engine between gaseous fuel and liquid fuel; and attaching a liquid fuel cut-off to the carburetor to close the fuel passage upon actuation of the switch from liquid fuel to gaseous fuel, as called for in claim 57 of U.S. Patent No. 10,697,398.

87. Under Champion’s apparent claim construction underlying its assertion of infringement against the Generac Accused Generators, the Champion dual fuel generator model 100153, alone and/or in combination with the ’273 Patent, discloses every element of at least the following claim of the ’120 Patent:

a. Independent claim 12 by specifically including a multi-fuel generator and fuel delivery system having a multi-fuel internal combustion engine configured to operate on a liquid fuel supplied from a liquid fuel source through a liquid fuel line and a gaseous fuel supplied from a pressurized fuel source through a gaseous fuel line, an alternator driven by the multi-fuel internal combustion engine, and a fuel regulator system including a primary pressure regulator coupled to a service valve of a pressurized fuel source to regulate fuel supplied from the pressurized fuel source to a reduced pressure and a secondary pressure regulator coupled to the primary pressure regulator to regulate fuel supplied from the primary pressure regulator to a desired pressure for delivery through the gaseous fuel line to operate the engine, as called for in claim 12 of U.S. Patent No. 11,143,120.

88. Under Champion's apparent claim construction underlying its assertion of infringement against the Generac Accused Generators, the Champion dual fuel generator model 100153, alone and/or in combination with the '273 Patent, discloses every element of at least the following claim of the '145 Patent:

a. Independent claim 1 by specifically including a dual fuel generator comprising: an engine operable on a gaseous fuel and a liquid fuel; an electrical power generator driven by the engine and comprising a charging coil; a switch to change operation of the engine between gaseous fuel and liquid fuel; a carburetor attached to an intake of the engine to mix air and fuel and connect to a gaseous fuel source and a liquid fuel source; a liquid fuel cut-off solenoid to interrupt liquid fuel flow to the engine upon actuation of the switch from liquid fuel to gaseous fuel; and a voltage regulator coupled to the charging coil to receive power therefrom and that operates to provide a regulated voltage to the liquid fuel cut-off solenoid, as called for in claim 1 of U.S. Patent No. 11,143,145.

89. Under Champion's apparent claim construction underlying its assertion of infringement against the Generac Accused Generators, the Champion dual fuel generator model 100153, alone and/or in combination with the '273 Patent, discloses every element of at least the following claim of the '985 Patent:

a. Independent claim 16 by specifically including a dual fuel generator and fuel delivery system having a dual fuel generator configured to operate on a liquid fuel supplied from a liquid fuel source through a liquid fuel line and a gaseous fuel supplied from a pressurized fuel source through a gaseous fuel line; and a fuel regulator system located off board a dual fuel generator, including a primary pressure regulator coupled to a service valve of a pressurized fuel source, configured to regulate the gaseous fuel supplied from the pressurized fuel source in the first stage, the gaseous fuel regulated down to a first reduced pressure in the first stage and regulate the gaseous fuel output from the first stage in the second stage, the first reduced pressure gaseous fuel from the first stage being regulated down to a second reduced pressure in the second stage for delivery through the gaseous fuel line to operate the generator, wherein the fuel regulator system outputs gaseous fuel to the generator for operation of the engine at the second reduced pressure, as called for in claim 16 of U.S. Patent No. 11,492,985.

90. Under Champion's apparent claim construction underlying its assertion of infringement against the Generac Accused Generators, the Champion dual fuel generator model

100153, alone and/or in combination with the ’273 Patent, discloses every element of at least the following claim of the ’654 Patent:

a. Independent claim 6 by specifically including a dual fuel generator and fuel delivery system having a dual fuel generator configured to operate on a liquid fuel supplied from a liquid fuel source through a liquid fuel line and a gaseous fuel supplied from a pressurized fuel source through a gaseous fuel line, a fuel regulator system located off board the dual fuel generator and having a primary pressure regulator coupled to a service valve of a pressurized fuel source and configured to regulate a gaseous fuel supplied from the pressurized fuel source to a first reduced pressure and a secondary pressure regulator coupled to the primary pressure regulator and configured to regulate the gaseous fuel supplied from the primary pressure regulator down from the first reduced pressure to a second reduced pressure for delivery through a gaseous fuel line to operate the dual fuel generator, a mechanical fuel valve actuatable between a first position and a second position to selectively control fuel flow to the dual fuel generator from a liquid fuel source through a liquid fuel line and the pressurized fuel source through the gaseous fuel line and that opens and closes the liquid fuel line to selectively control fuel flow from the liquid fuel source to the dual fuel generator, and a fuel lockout apparatus coupled to the mechanical fuel valve and configured to prevent the pressurized fuel source from coupling to the gaseous fuel line while the mechanical fuel valve opens the liquid fuel line and permit the pressurized fuel source to couple to the gaseous fuel line while the mechanical fuel valve closes the liquid fuel line, as called for in claim 6 of U.S. Patent No. 11,530,654.

91. Under Champion’s apparent claim construction underlying its assertion of infringement against the Generac Accused Generators, the Champion dual fuel generator model 100153, alone and/or in combination with the ’273 Patent, discloses every element of at least the following claims of the ’970 Patent:

a. Independent claim 1 by specifically including a dual fuel generator and fuel delivery system including a dual fuel generator having an engine configured to operate on a liquid fuel supplied from a liquid fuel source through a liquid fuel line and a gaseous fuel supplied from a pressurized fuel source through a gaseous fuel line and a carburetor attached to an intake of the engine to mix air and fuel and connect the liquid fuel line to the intake; a fuel regulator system located off board the dual fuel generator, the fuel regulator system including a primary pressure regulator coupled to a service valve of the pressurized fuel source and configured to regulate the fuel supplied from the pressurized fuel source to a reduced pressure and a secondary pressure regulator coupled to the primary pressure regulator and configured to

regulate the gaseous fuel supplied from the primary pressure regulator to a desired pressure for delivery through the gaseous fuel line to operate the dual fuel generator; and a mechanical fuel valve actuatable between a first position and a second position to selectively control fuel flow to the engine from the liquid fuel source through the liquid fuel line and the pressurized fuel source through the gaseous fuel line, as called for in claim 1 of U.S. Patent No. 11,840,970.

b. Independent claim 20 by specifically including a dual fuel generator and fuel delivery system comprising: a dual fuel generator configured to operate on a liquid fuel supplied from a liquid fuel source through a liquid fuel line and a gaseous fuel supplied from a pressurized fuel source through a gaseous fuel line, the dual fuel generator comprising: a gaseous fuel valve coupled to an inlet of the gaseous fuel line and connectable to the pressurized fuel source, and a mechanical fuel valve actuatable between a first position and a second position to selectively control fuel flow to the dual fuel generator from the liquid fuel source through the liquid fuel line and the pressurized fuel source through the gaseous fuel line; and a fuel regulator system located off board the dual fuel generator, the fuel regulator system comprising: a primary pressure regulator connectable to a service valve of the pressurized fuel source and configured to regulate the fuel supplied from the pressurized fuel source to a reduced pressure, and a secondary pressure regulator coupled to the primary pressure regulator and connectable to the gaseous fuel valve, the secondary pressure regulator configured to regulate the gaseous fuel supplied from the primary pressure regulator to a desired pressure for delivery through the gaseous fuel line to operate the dual fuel generator, as called for in claim 20 of U.S. Patent No. 11,840,970.

92. Under Champion's apparent claim construction underlying its assertion of infringement against the Generac Accused Generators, the Champion dual fuel generator model 100153, alone and/or in combination with the '273 Patent, discloses every element of at least the following claim of the '895 Patent:

a. Independent claim 1 by specifically including a mechanical fuel lockout switch for a dual fuel engine having a mechanical fuel valve actuatable between a first position and a second position to selectively control fuel flow to the dual fuel engine from a first fuel source through a first fuel line and a second fuel source through a second fuel line, the mechanical fuel valve configured to allow communication between the first fuel source and the dual fuel engine and prevent communication between the second fuel source and the dual fuel engine while in the first position and prevent communication between the first fuel source and the dual fuel engine while in the second position; and a fuel lockout apparatus coupled to the

mechanical fuel valve and configured to prevent the second fuel source from coupling to the second fuel line while the mechanical fuel valve is in the first position and permit the second fuel source to couple to the second fuel line while the mechanical fuel valve is in the second position, as called for in claim 1 of U.S. Patent No. 11,905,895.

93. The Champion dual fuel generator model 100153, alone and/or in combination with the ’273 Patent, anticipates or renders obvious the 2015 Patent Family.

**Champion’s Inequitable Conduct**

94. The 2015 Patent Family is unenforceable at least because the patents were obtained through inequitable conduct.

95. Mark J. Sarder, Aleko D. Sotiriades, James. J. Dehn, Leigh Jenison, Kendall J. Collie, and Hiroaki Sato (“the Named Inventors”) are listed as the named inventors in the 2015 Patent Family. Mark J. Sarder, Aleko D. Sotiriades, James. J. Dehn, and Leigh Jenison are listed as named inventors for each patent in the 2015 Patent Family. Kendall J. Collie is listed as a named inventor for the ’398, ’145, and ’120 Patents. Hiroaki Sato is listed as a named inventor for the ’398 and ’145 Patents.

96. On information and belief, Sarder was Champion’s Vice President of Engineering at least from 2015 to 2019.

97. On information and belief, Dehn was Champion’s Chief Engineer at least from 2015 to 2019.

98. The Named Inventors had a duty to disclose any prior art relevant to the 2015 Patent Family to the PTO.

99. Timothy Ziolkowski, Jacob Fritz, Kevin R. Rosin, Stephanie Laundre, and Andrew C. Stark (“the Prosecuting Attorneys”) prosecuted the patents in the 2015 Patent Family. At least one of the Prosecuting Attorneys prosecuted each of the patents in the 2015 Patent Family.

100. The Prosecuting Attorneys had a duty to disclose any prior art relevant to the 2015 Patent Family to the PTO.

101. Dennis M. Trine, Lei Zhao, and Jiehui Ma ("the Champion Officers") are officers of Champion. The Champion Officers own and/or operate Champion.

102. Lei Zhao and Dennis M. Trine are Champion's directors.

103. Jiehui Ma is Champion's treasurer.

104. On information and belief, the Champion Officers have directed and/or participated in and continue to direct and/or participate in the prosecution and enforcement of the 2015 Patent Family.

105. The Champion Officers had a duty to disclose any prior art relevant to the 2015 Patent Family to the PTO.

106. The RD9000E dual fuel generator was publicly available and sold by Firman Power Equipment Inc. ("Firman") prior to June 12, 2015. Firman publicly displayed the RD9000E dual fuel generator at a trade show in May 2015.

107. Named Inventor Sarder went to the May 2015 trade show in which Firman displayed the RD9000E dual fuel generator.

108. On information and belief, Named Inventor Sarder inspected the RD9000E dual fuel generator at the trade show in May 2015.

109. On information and belief, Sarder shared his observations regarding the features of the RD9000E dual fuel generator with the Prosecuting Attorneys, Champion Officers, and other Named Inventors prior to June 12, 2015.

110. In 2015, Champion purchased the RD9000E dual fuel generator from Firman.

111. On information and belief, a manual for the RD9000E dual fuel generator was packaged with the generator that Champion received.

112. On information and belief, Champion purchased a sample RD9000E dual fuel generator in order to inspect and test it.

113. On information and belief, Champion inspected and tested the sample in 2015. On information and belief, the Named Inventors inspected and tested the sample in 2015 and/or the results of the inspection and testing were disclosed to the Named Inventors in 2015.

114. On information and belief, Champion inspected and tested the sample in 2015. On information and belief, the Prosecuting Attorneys inspected and tested the sample in 2015 and/or the results of the inspection and testing were disclosed to the Prosecuting Attorneys in 2015.

115. On information and belief, the results of the inspection and testing were disclosed to the Champion Officers in 2015.

116. On September 9, 2019, Champion sent a cease and desist letter to Firman, alleging infringement of one or more of the patents in the 2015 Patent Family.

117. On October 8, 2019, Firman sent a response letter notifying Champion that the RD9000E dual fuel generator was prior art that anticipated the asserted patents in the 2015 Patent Family.

118. On October 10, 2019, Champion sent a letter to Firman acknowledging receipt of Firman's October 10, 2019, letter and requesting documentary proof of the on sale or public availability date of the RD9000E dual fuel generator.

119. On October 18, 2019, Firman sent a letter to Champion attaching business records depicting sales of the RD9000E dual fuel generator prior to June 12, 2015. Firman invited Champion to inspect a sample of the RD9000E dual fuel generator.

120. On November 20, 2019, Champion's counsel Sam Sumitani and Senior Technical Engineer Jim Miotto inspected a sample of the RD9000E dual fuel generator at the offices of Firman's counsel in Seattle, Washington.

121. Champion's representatives inspected at least the features of the sample RD9000E dual fuel generator that are visible without disassembling the generator. On information and belief, Champion declined an invitation from Firman to inspect the internal components of the generator.

122. On information and belief, Sumitani observed that the sample RD9000E dual fuel generator included every claimed feature of the claims of the 2015 Patent Family.

123. On information and belief, Miotto observed that the sample RD9000E dual fuel generator included every claimed feature of the claims of the 2015 Patent Family.

124. On information and belief, in 2019 Champion sent copies and/or drafts of the September 9, October 8, October 10, and October 18 correspondence between Champion and Firman to the Named Inventors, Prosecuting Attorneys, and/or Champion Officers.

125. On information and belief, Champion's representatives at the November 20, 2019, inspection shared their observations regarding the features of the RD9000E dual fuel generator with the Named Inventors, Prosecuting Attorneys, and/or Champion Officers.

126. On information and belief, Champion's representatives at the November 20, 2019, inspection shared their observations that the RD9000E dual fuel generator includes every claimed feature of the 2015 Patent Family with the Named Inventors, Prosecuting Attorneys, and/or Champion Officers.

127. On July 7, 2020, Champion sent a demand letter to Generac asserting that Accused Generators DF3500E and DF7500E infringe the '101 Patent of the 2013 Patent Family.

128. On information and belief, Champion's July 7, 2020 demand letter did not assert infringement of the 2015 Patent Family because Champion knew that the 2015 Patent Family was invalid and/or unenforceable.

129. Four years later, the Prosecuting Attorneys sent a sent another demand letter on behalf of Champion to Generac, now asserting that the Accused Generators also infringe the 2015 Patent Family.

130. The Named Inventors, Prosecuting Attorneys, and/or Champion Officers violated their duty of candor to the PTO by failing to disclose the RD9000E dual fuel generator during prosecution of the 2015 Patent Family.

131. On information and belief, the Named Inventors, Prosecuting Attorneys, and Champion Officers knew that the RD9000E dual fuel generator anticipated the claims of the 2015 Patent Family after Sarder inspected the generator at the May 2015 trade show.

132. On information and belief, the Named Inventors, Prosecuting Attorneys, and Champion Officers continued to prosecute the 2015 Patent Family after inspecting or learning of the inspection of the RD9000E generator at the May 2015 trade show.

133. On information and belief, the Named Inventors, Prosecuting Attorneys, and Champion Officers knew that the RD9000E dual fuel generator anticipated the claims of the 2015 Patent Family after Champion purchased and tested the RD9000E dual fuel generator in 2015.

134. On information and belief, the Named Inventors, Prosecuting Attorneys, and Champion Officers continued to prosecute the 2015 Patent Family after participating in and/or learning the results of the purchasing and testing of the RD9000E dual fuel generator in 2015.

135. On information and belief, the Named Inventors, Prosecuting Attorneys, and Champion Officers knew that the RD9000E generator anticipated the claims of the 2015 Patent

Family after Champion inspecting or learning of the inspection of the RD9000E dual fuel generator during the November 20, 2019, inspection.

136. On information and belief, the Named Inventors, Prosecuting Attorneys, and Champion Officers continued to prosecute the 2015 Patent Family after learning the results of the November 20, 2019, inspection.

137. The Named Inventors, Prosecuting Attorneys, and Champion Officers withheld information regarding the RD9000E dual fuel generator from the PTO.

138. The withheld information was "but for" material to the prosecution of the 2015 Patent Family because the RD9000E dual fuel generator includes at least one element of at least one claim of each patent in the 2015 Patent Family, thereby making it "but for" material, non-cumulative prior art that those involved in prosecution of the patent knew would invalidate the sought after claims.

139. To the extent that the claims of the '780 Patent are construed to cover the Firman models that Champion has accused of infringement in *Champion Power Equipment, Inc. v. Firman Power Equipment, Inc.*, Case No. 2:23-cv-02371-DWL (D. Ariz.), the RD9000E dual fuel generator discloses every element of at least the following claims of the '780 Patent:

a. Independent claim 1 by specifically including a mechanical fuel lockout switch for a dual fuel engine having a mechanical fuel valve actuatable between a first position and a second position to selectively control fuel flow to the dual fuel engine from a first fuel source through a first fuel line and a second fuel source through a second fuel line and a fuel lockout apparatus coupled to the mechanical fuel valve, wherein the mechanical fuel lockout switch communicates the first fuel source to the dual fuel engine and prevents communication between the second fuel source and the dual fuel engine when the mechanical fuel valve is in the first position and communicates the second fuel source to the dual fuel engine and interrupts the first fuel source communication with the dual fuel engine when in the second position and wherein the fuel lockout apparatus is configured to prevent the second fuel source from coupling to the second fuel line while the mechanical fuel valve is in the first position and permit the second fuel

source to couple to the second fuel line while the mechanical fuel valve is in the second position, as called for in claim 1 of U.S. Patent No. 10,221,780.

b. Independent claim 8 by specifically including a mechanical fuel lockout switch for an internal combustion engine, the mechanical fuel lockout being assembled by providing an internal combustion engine configured to operate on a fuel from a first fuel source and a different fuel from a second fuel source, coupling a mechanical fuel valve to the internal combustion engine actuatable between a first position and a second position to selectively control fuel flow to the internal combustion engine from the first fuel source through a first fuel line and the second fuel source through a second fuel line, and coupling a fuel lockout apparatus to the mechanical fuel valve, wherein the fuel lockout apparatus prevents actuation of the mechanical fuel valve to the first position when the second fuel source is coupled to the internal combustion engine, as called for in claim 8 of U.S. Patent No. 10,221,780.

c. Independent claim 15 by specifically including a mechanical fuel lockout switch for a dual fuel engine having a mechanical fuel valve actuatable between a first position and a second position to selectively control fuel flow to the dual fuel engine from a first fuel source through a first fuel line and a second fuel source through a second fuel line and a fuel lockout apparatus coupled to the mechanical fuel valve, wherein the mechanical fuel lockout switch communicates the first fuel source to the dual fuel engine and prevents communication between the second fuel source and the dual fuel engine when the mechanical fuel valve is in the first position and communicates the second fuel source to the dual fuel engine and interrupts the first fuel source communication with the dual fuel engine when in the second position and wherein the fuel lockout apparatus prevents actuation of the mechanical fuel valve to the first position when the second fuel source communicates with the dual fuel engine.

140. To the extent that the claims of the ’398 Patent are construed to cover the Firman models that Champion has accused of infringement in *Champion Power Equipment, Inc. v. Firman Power Equipment, Inc.*, Case No. 2:23-cv-02371-DWL (D. Ariz.), the RD9000E dual fuel generator discloses every element of at least the following claims of the ’398 Patent:

a. Independent claim 1 by specifically including a dual fuel engine comprising: an engine operable on a gaseous fuel and a liquid fuel; a switch to change operation of the engine between gaseous fuel and liquid fuel; a carburetor attached to an intake of the engine to mix air and fuel and connect to a gaseous fuel source and a liquid fuel source; a liquid fuel valve positioned along a liquid fuel line coupling the liquid fuel source to the

carburetor; a gaseous fuel valve positioned along a gaseous fuel line coupling the gaseous fuel source to the carburetor; and a liquid fuel cut-off incorporated into the carburetor to interrupt liquid fuel upon actuation of the switch from liquid fuel to gaseous fuel, as called for in claim 1 of U.S. Patent No. 10,697,398.

b. Independent claim 57 by specifically including a method of assembling a dual fuel engine comprising: providing an engine operable on a gaseous fuel and a liquid fuel; attaching a carburetor to an intake of the engine, the carburetor comprising: a throat to mix gaseous fuel with air and liquid fuel with air, a float bowl, and a fuel passage extending from the float bowl to the throat to provide liquid fuel; coupling a switch to the engine to change operation of the engine between gaseous fuel and liquid fuel; and attaching a liquid fuel cut-off to the carburetor to close the fuel passage upon actuation of the switch from liquid fuel to gaseous fuel, as called for in claim 57 of U.S. Patent No. 10,697,398.

141. To the extent that the claims of the ’120 Patent are construed to cover the Firman models that Champion has accused of infringement in *Champion Power Equipment, Inc. v. Firman Power Equipment, Inc.*, Case No. 2:23-cv-02371-DWL (D. Ariz.), the RD9000E dual fuel generator discloses every element of at least the following claim of the ’120 Patent:

a. Independent claim 12 by specifically including a multi-fuel generator and fuel delivery system having a multi-fuel internal combustion engine configured to operate on a liquid fuel supplied from a liquid fuel source through a liquid fuel line and a gaseous fuel supplied from a pressurized fuel source through a gaseous fuel line, an alternator driven by the multi-fuel internal combustion engine, and a fuel regulator system including a primary pressure regulator coupled to a service valve of a pressurized fuel source to regulate fuel supplied from the pressurized fuel source to a reduced pressure and a secondary pressure regulator coupled to the primary pressure regulator to regulate fuel supplied from the primary pressure regulator to a desired pressure for delivery through the gaseous fuel line to operate the engine, as called for in claim 12 of U.S. Patent No. 11,143,120.

142. To the extent that the claims of the ’145 Patent are construed to cover the Firman models that Champion has accused of infringement in *Champion Power Equipment, Inc. v. Firman Power Equipment, Inc.*, Case No. 2:23-cv-02371-DWL (D. Ariz.), the RD9000E dual fuel generator discloses every element of at least the following claim of the ’145 Patent:

a. Independent claim 1 by specifically including a dual fuel generator comprising: an engine operable on a gaseous fuel and a liquid fuel; an electrical power generator driven by the engine and comprising a charging coil; a switch to change operation of the engine between gaseous fuel and liquid fuel; a carburetor attached to an intake of the engine to mix air and fuel and connect to a gaseous fuel source and a liquid fuel source; a liquid fuel cut-off solenoid to interrupt liquid fuel flow to the engine upon actuation of the switch from liquid fuel to gaseous fuel; and a voltage regulator coupled to the charging coil to receive power therefrom and that operates to provide a regulated voltage to the liquid fuel cut-off solenoid, as called for in claim 1 of U.S. Patent No. 11,143,145.

143. To the extent that the claims of the ’985 Patent are construed to cover the Firman models that Champion has accused of infringement in *Champion Power Equipment, Inc. v. Firman Power Equipment, Inc.*, Case No. 2:23-cv-02371-DWL (D. Ariz.), the RD9000E dual fuel generator discloses every element of at least the following claim of the ’985 Patent:

a. Independent claim 16 by specifically including a dual fuel generator and fuel delivery system having a dual fuel generator configured to operate on a liquid fuel supplied from a liquid fuel source through a liquid fuel line and a gaseous fuel supplied from a pressurized fuel source through a gaseous fuel line; and a fuel regulator system located off board a dual fuel generator, including a primary pressure regulator coupled to a service valve of a pressurized fuel source, configured to regulate the gaseous fuel supplied from the pressurized fuel source in the first stage, the gaseous fuel regulated down to a first reduced pressure in the first stage and regulate the gaseous fuel output from the first stage in the second stage, the first reduced pressure gaseous fuel from the first stage being regulated down to a second reduced pressure in the second stage for delivery through the gaseous fuel line to operate the generator, wherein the fuel regulator system outputs gaseous fuel to the generator for operation of the engine at the second reduced pressure, as called for in claim 16 of U.S. Patent No. 11,492,985.

144. To the extent that the claims of the ’654 Patent are construed to cover the Firman models that Champion has accused of infringement in *Champion Power Equipment, Inc. v. Firman Power Equipment, Inc.*, Case No. 2:23-cv-02371-DWL (D. Ariz.), the RD9000E dual fuel generator discloses every element of at least the following claim of the ’654 Patent:

a. Independent claim 6 by specifically including a dual fuel generator and fuel delivery system having a dual fuel generator configured to operate on a liquid fuel supplied from a liquid fuel source through a liquid fuel line and

a gaseous fuel supplied from a pressurized fuel source through a gaseous fuel line, a fuel regulator system located off board the dual fuel generator and having a primary pressure regulator coupled to a service valve of a pressurized fuel source and configured to regulate a gaseous fuel supplied from the pressurized fuel source to a first reduced pressure and a secondary pressure regulator coupled to the primary pressure regulator and configured to regulate the gaseous fuel supplied from the primary pressure regulator down from the first reduced pressure to a second reduced pressure for delivery through a gaseous fuel line to operate the dual fuel generator, a mechanical fuel valve actuatable between a first position and a second position to selectively control fuel flow to the dual fuel generator from a liquid fuel source through a liquid fuel line and the pressurized fuel source through the gaseous fuel line and that opens and closes the liquid fuel line to selectively control fuel flow from the liquid fuel source to the dual fuel generator, and a fuel lockout apparatus coupled to the mechanical fuel valve and configured to prevent the pressurized fuel source from coupling to the gaseous fuel line while the mechanical fuel valve opens the liquid fuel line and permit the pressurized fuel source to couple to the gaseous fuel line while the mechanical fuel valve closes the liquid fuel line, as called for in claim 6 of U.S. Patent No. 11,530,654.

145. To the extent that the claims of the ’970 Patent are construed to cover the Firman models that Champion has accused of infringement in *Champion Power Equipment, Inc. v. Firman Power Equipment, Inc.*, Case No. 2:23-cv-02371-DWL (D. Ariz.), the RD9000E dual fuel generator discloses every element of at least the following claims of the ’970 Patent:

a. Independent claim 1 by specifically including a dual fuel generator and fuel delivery system including a dual fuel generator having an engine configured to operate on a liquid fuel supplied from a liquid fuel source through a liquid fuel line and a gaseous fuel supplied from a pressurized fuel source through a gaseous fuel line and a carburetor attached to an intake of the engine to mix air and fuel and connect the liquid fuel line to the intake; a fuel regulator system located off board the dual fuel generator, the fuel regulator system including a primary pressure regulator coupled to a service valve of the pressurized fuel source and configured to regulate the fuel supplied from the pressurized fuel source to a reduced pressure and a secondary pressure regulator coupled to the primary pressure regulator and configured to regulate the gaseous fuel supplied from the primary pressure regulator to a desired pressure for delivery through the gaseous fuel line to operate the dual fuel generator; and a mechanical fuel valve actuatable between a first position and a second position to selectively control fuel flow to the engine from the liquid fuel source through the liquid fuel line and the pressurized fuel source through the gaseous fuel line, as called for in claim 1 of U.S. Patent No. 11,840,970.

b. Independent claim 20 by specifically including a dual fuel generator and fuel delivery system comprising: a dual fuel generator configured to operate on a liquid fuel supplied from a liquid fuel source through a liquid fuel line and a gaseous fuel supplied from a pressurized fuel source through a gaseous fuel line, the dual fuel generator comprising: a gaseous fuel valve coupled to an inlet of the gaseous fuel line and connectable to the pressurized fuel source, and a mechanical fuel valve actuatable between a first position and a second position to selectively control fuel flow to the dual fuel generator from the liquid fuel source through the liquid fuel line and the pressurized fuel source through the gaseous fuel line; and a fuel regulator system located off board the dual fuel generator, the fuel regulator system comprising: a primary pressure regulator connectable to a service valve of the pressurized fuel source and configured to regulate the fuel supplied from the pressurized fuel source to a reduced pressure, and a secondary pressure regulator coupled to the primary pressure regulator and connectable to the gaseous fuel valve, the secondary pressure regulator configured to regulate the gaseous fuel supplied from the primary pressure regulator to a desired pressure for delivery through the gaseous fuel line to operate the dual fuel generator, as called for in claim 20 of U.S. Patent No. 11,840,970.

146. To the extent that the claims of the ’895 Patent are construed to cover the Firman models that Champion has accused of infringement in *Champion Power Equipment, Inc. v. Firman Power Equipment, Inc.*, Case No. 2:23-cv-02371-DWL (D. Ariz.), the RD9000E dual fuel generator discloses every element of at least the following claims of the ’895 Patent:

a. Independent claim 1 by specifically including a mechanical fuel lockout switch for a dual fuel engine having a mechanical fuel valve actuatable between a first position and a second position to selectively control fuel flow to the dual fuel engine from a first fuel source through a first fuel line and a second fuel source through a second fuel line, the mechanical fuel valve configured to allow communication between the first fuel source and the dual fuel engine and prevent communication between the second fuel source and the dual fuel engine while in the first position and prevent communication between the first fuel source and the dual fuel engine while in the second position; and a fuel lockout apparatus coupled to the mechanical fuel valve and configured to prevent the second fuel source from coupling to the second fuel line while the mechanical fuel valve is in the first position and permit the second fuel source to couple to the second fuel line while the mechanical fuel valve is in the second position, as called for in claim 1 of U.S. Patent No. 11,905,895.

b. Independent claim 8 by specifically including a mechanical fuel lockout switch for a dual fuel engine having a mechanical fuel valve actuatable

between a first position and a second position to selectively control fuel flow to the dual fuel engine from a first fuel source through a first fuel line and a second fuel source through a second fuel line, the mechanical fuel valve configured to allow communication between the first fuel source and the dual fuel engine and prevent communication between the second fuel source and the dual fuel engine while the first position and prevent communication between the first fuel source and the dual fuel engine while in the second position; and a fuel lockout apparatus coupled to the mechanical fuel valve and configured to prevent actuation of the mechanical fuel valve to the first position when the second fuel source is in communication with the dual fuel engine, as called for in claim 8 of U.S. Patent No. 11,905,895.

c. Independent claim 14 by specifically including a dual fuel generator and fuel delivery system having a dual fuel generator configured to operate on a liquid fuel supplied from a liquid fuel source through a liquid fuel line and a gaseous fuel supplied from a pressurized fuel source through a gaseous fuel line; a fuel regulator system located off board the dual fuel generator, the fuel regulator system including a primary pressure regulator couplable to a service valve of the pressurized fuel source and configured to regulate the gaseous fuel supplied from the pressurized fuel source to a reduced pressure and a secondary pressure regulator couplable to the primary pressure regulator and configured to regulate the gaseous fuel supplied from the primary pressure regulator to a desired pressure for delivery through the gaseous fuel line to operate the dual fuel generator; a mechanical fuel valve actuatable between a first position and a second position to selectively control fuel flow to the dual fuel generator from the liquid fuel source through the liquid fuel line and the pressurized fuel source through the gaseous fuel line, the mechanical fuel valve configured to open and close the liquid fuel line to selectively control fuel flow from the liquid fuel source to the dual fuel generator; and a fuel lockout apparatus coupled to the mechanical fuel valve and configured to prevent the pressurized fuel source from coupling to the gaseous fuel line while the liquid fuel line is open and permit the pressurized fuel source to couple to the gaseous fuel line while the liquid fuel line is closed by the mechanical fuel valve, as called for in claim 14 of U.S. Patent No. 11,905,895.

147. On information and belief, the Named Inventors, Prosecuting Attorneys, and Champion Officers knew that the withheld information was "but for" material and non-cumulative to the prosecution of the 2015 Patent Family because they knew that the RD9000E dual fuel generator anticipates and/or renders obvious at least one claim of each patent in the 2015 Patent Family.

148. The Named Inventors, Prosecuting Attorneys, and Champion Officers had the specific intent to deceive the PTO, which can be reasonably inferred from at least the following conduct:

- Despite having knowledge of the public availability of the RD9000E dual fuel generator at the May 2015 trade show, failing to disclose the RD9000E dual fuel generator to the PTO;
- Despite having knowledge that a RD9000E dual fuel generator manual was publicly available prior to June 12, 2015, failing to disclose the generator or its manual to the PTO;
- Despite having knowledge that the RD9000E dual fuel generator was sold prior to June 12, 2015, failing to disclose the RD9000E dual fuel generator to the PTO;
- Despite having knowledge at least as early as July 7, 2020, that the 2015 Patent Family is invalid or unenforceable, asserting infringement of those patents in 2024; and
- Taking infringement positions in this action, and in *Champion Power Equipment, Inc. v. Firman Power Equipment, Inc.*, Case No. 2:23-cv-02371-DWL (D. Ariz.), that would clearly render the RD9000E generator an anticipatory prior art reference.

**FIRST CAUSE OF ACTION**

**Champion's Infringement of U.S. Patent No. 10,563,596**

149. Generac incorporates by reference and realleges each and every allegation of the preceding paragraphs as if fully set forth herein.

150. Generac owns all right, title, and interest in the '596 Patent.

151. Champion makes, uses, imports, offers for sale, and/or sells at least the exemplary 9200W Electric Start Dual Fuel Generator with CO Shield, 3650W Dual Fuel Generator with CO Shield, and 3650W Wireless Start Generator with CO Shield products in the United States.

152. As described in paragraphs 22-26 above, the Champion CO Shield Products, including at least the exemplary products 9200W Electric Start Dual Fuel Generator with CO Shield, 3650W Dual Fuel Generator with CO Shield, and 3650W Wireless Start Generator with CO Shield, infringe at least claim 1 of the ’596 Patent.

153. On information and belief, Champion’s infringement of the ’596 Patent has been, and is, knowing and willful.

154. Generac has been damaged by Champion’s infringement of the ’596 Patent and will continue to be damaged in the future unless Champion is permanently enjoined from infringing the ’596 Patent.

**SECOND CAUSE OF ACTION**

**Champion’s Infringement of U.S. Patent No. 11,248,540**

155. Generac incorporates by reference and realleges each and every allegation of the preceding paragraphs as if fully set forth herein.

156. Generac owns all right, title, and interest in the ’540 Patent.

157. Champion makes, uses, imports, offers for sale, and/or sells at least the exemplary 9200W Electric Start Dual Fuel Generator with CO Shield, 3650W Dual Fuel Generator with CO Shield, and 3650W Wireless Start Generator with CO Shield products in the United States.

158. As described in paragraphs 28-32 above, the Champion CO Shield Products, including at least the exemplary products 9200W Electric Start Dual Fuel Generator with CO Shield, 3650W Dual Fuel Generator with CO Shield, and 3650W Wireless Start Generator with CO Shield, infringe at least claim 19 of the ’540 Patent.

159. On information and belief, Champion's infringement of the '540 Patent has been, and is, knowing and willful.

160. Generac has been damaged by Champion's infringement of the '540 Patent and will continue to be damaged in the future unless Champion is permanently enjoined from infringing the '540 Patent.

## THIRD CAUSE OF ACTION

### Declaratory Judgment of Non-infringement of the '101 Patent

161. Generac incorporates by reference and realleges each and every allegation of the preceding paragraphs as if fully set forth herein.

162. There exists an actual case or controversy between Generac and Champion because of Champion's claims of infringement of the '101 Patent.

163. Generac is entitled to make and sell the Generac Accused Generators because Generac does not directly or indirectly infringe, either literally or under the doctrine of equivalents, any claim of the '101 Patent.

164. For example, and without limitation, the Generac Accused Generators lack a "selector switch" and/or a "valve assembly" as required by the asserted claims of the '101 Patent.

165. Because a definite and concrete dispute exists between Generac and Champion regarding Generac's alleged infringement of the '101 Patent, this Court should issue a judicial declaration that Generac does not infringe any claim of the '101 Patent.

## FOURTH CAUSE OF ACTION

### Declaratory Judgment of Non-infringement of the '667 Patent

166. Generac incorporates by reference and realleges each and every allegation of the preceding paragraphs as if fully set forth herein.

167. There exists an actual case or controversy between Generac and Champion because of Champion's claims of infringement of the '667 Patent.

168. Generac is entitled to make and sell the Generac Accused Generators because Generac does not directly or indirectly infringe, either literally or under the doctrine of equivalents, any claim of the '667 Patent.

169. For example, and without limitation, the Generac Accused Generators lack a "selector switch" and/or a "valve assembly" as required by the claims of the '667 Patent.

170. Because a definite and concrete dispute exists between Generac and Champion regarding Generac's alleged infringement of the '667 Patent, this Court should issue a judicial declaration that Generac does not infringe any claim of the '667 Patent.

**FIFTH CAUSE OF ACTION**

**Declaratory Judgment of Non-infringement of the '896 Patent**

171. Generac incorporates by reference and realleges each and every allegation of the preceding paragraphs as if fully set forth herein.

172. There exists an actual case or controversy between Generac and Champion because of Champion's claims of infringement of the '896 Patent.

173. Generac is entitled to make and sell the Generac Accused Generators because Generac does not directly or indirectly infringe, either literally or under the doctrine of equivalents, any claim of the '896 Patent.

174. For example, and without limitation, the Generac Accused Generators lack a "selector switch" and/or a "valve assembly" as required by at least one claim of the '896 Patent.

175. Because a definite and concrete dispute exists between Generac and Champion regarding Generac's alleged infringement of the '896 Patent, this Court should issue a judicial declaration that Generac does not infringe any claim of the '896 Patent.

## SIXTH CAUSE OF ACTION

**Declaratory Judgment of Non-infringement of the ’780 Patent**

176. Generac incorporates by reference and realleges each and every allegation of the preceding paragraphs as if fully set forth herein.

177. There exists an actual case or controversy between Generac and Champion because of Champion’s claims of infringement of the ’780 Patent.

178. Generac is entitled to make and sell the Generac Accused Generators because Generac does not directly or indirectly infringe, either literally or under the doctrine of equivalents, any claim of the ’780 Patent.

179. For example, and without limitation, the Generac Accused Generators lack a “mechanical fuel valve” and/or “fuel lockout apparatus” as required by the claims of the ’780 Patent.

180. Because a definite and concrete dispute exists between Generac and Champion regarding Generac’s alleged infringement of the ’780 Patent, this Court should issue a judicial declaration that Generac does not infringe any claim of the ’780 Patent.

## SEVENTH CAUSE OF ACTION

**Declaratory Judgment of Non-infringement of the ’398 Patent**

181. Generac incorporates by reference and realleges each and every allegation of the preceding paragraphs as if fully set forth herein.

182. There exists an actual case or controversy between Generac and Champion because of Champion’s claims of infringement of the ’398 Patent.

183. Generac is entitled to make and sell the Generac Accused Generators because Generac does not directly or indirectly infringe, either literally or under the doctrine of equivalents, any claim of the ’398 Patent.

184. For example, and without limitation, the Generac Accused Generators lack a "fuel shutoff" as required by at least one claim of the '398 Patent.

185. Because a definite and concrete dispute exists between Generac and Champion regarding Generac's alleged infringement of the '398 Patent, this Court should issue a judicial declaration that Generac does not infringe any claim of the '398 Patent.

## EIGHTH CAUSE OF ACTION

### Declaratory Judgment of Non-infringement of the '120 Patent

186. Generac incorporates by reference and realleges each and every allegation of the preceding paragraphs as if fully set forth herein.

187. There exists an actual case or controversy between Generac and Champion because of Champion's claims of infringement of the '120 Patent.

188. Generac is entitled to make and sell the Generac Accused Generators because Generac does not directly or indirectly infringe, either literally or under the doctrine of equivalents, any claim of the '120 Patent.

189. For example, and without limitation, the Generac Accused Generators lack a "fuel regulator system" as required by at least one claim of the '120 Patent.

190. Because a definite and concrete dispute exists between Generac and Champion regarding Generac's alleged infringement of the '120 Patent, this Court should issue a judicial declaration that Generac does not infringe any claim of the '120 Patent.

## NINTH CAUSE OF ACTION

### Declaratory Judgment of Non-infringement of the '145 Patent

191. Generac incorporates by reference and realleges each and every allegation of the preceding paragraphs as if fully set forth herein.

192. There exists an actual case or controversy between Generac and Champion because of Champion's claims of infringement of the '145 Patent.

193. Generac is entitled to make and sell the Generac Accused Generators because Generac does not directly or indirectly infringe, either literally or under the doctrine of equivalents, any claim of the '145 Patent.

194. For example, and without limitation, the Generac Accused Generators lack a "fuel shutoff" as required by at least one claim of the '145 Patent.

195. Because a definite and concrete dispute exists between Generac and Champion regarding Generac's alleged infringement of the '145 Patent, this Court should issue a judicial declaration that Generac does not infringe any claim of the '145 Patent.

**TENTH CAUSE OF ACTION**

**Declaratory Judgment of Non-infringement of the '985 Patent**

196. Generac incorporates by reference and realleges each and every allegation of the preceding paragraphs as if fully set forth herein.

197. There exists an actual case or controversy between Generac and Champion because of Champion's claims of infringement of the '985 Patent.

198. Generac is entitled to make and sell the Generac Accused Generators because Generac does not directly or indirectly infringe, either literally or under the doctrine of equivalents, any claim of the '985 Patent.

199. For example, and without limitation, the Generac Accused Generators lack a "fuel regulator system" as required by the claims of the '985 Patent.

200. Because a definite and concrete dispute exists between Generac and Champion regarding Generac's alleged infringement of the '985 Patent, this Court should issue a judicial declaration that Generac does not infringe any claim of the '985 Patent.

## ELEVENTH CAUSE OF ACTION

**Declaratory Judgment of Non-infringement of the ’654 Patent**

201. Generac incorporates by reference and realleges each and every allegation of the preceding paragraphs as if fully set forth herein.

202. There exists an actual case or controversy between Generac and Champion because of Champion’s claims of infringement of the ’654 Patent.

203. Generac is entitled to make and sell the Generac Accused Generators because Generac does not directly or indirectly infringe, either literally or under the doctrine of equivalents, any claim of the ’654 Patent.

204. For example, and without limitation, the Generac Accused Generators lack a “mechanical fuel valve” and/or “fuel lockout apparatus” as required by the asserted claims of the ’654 Patent.

205. Because a definite and concrete dispute exists between Generac and Champion regarding Generac’s alleged infringement of the ’654 Patent, this Court should issue a judicial declaration that Generac does not infringe any claim of the ’654 Patent.

## TWELFTH CAUSE OF ACTION

**Declaratory Judgment of Non-infringement of the ’970 Patent**

206. Generac incorporates by reference and realleges each and every allegation of the preceding paragraphs as if fully set forth herein.

207. There exists an actual case or controversy between Generac and Champion because of Champion’s claims of infringement of the ’970 Patent.

208. Generac is entitled to make and sell the Generac Accused Generators because Generac does not directly or indirectly infringe, either literally or under the doctrine of equivalents, any claim of the ’970 Patent.

209. For example, and without limitation, the Generac Accused Generators lack a "mechanical fuel valve" as required by the claims of the '970 Patent.

210. Because a definite and concrete dispute exists between Generac and Champion regarding Generac's alleged infringement of the '970 Patent, this Court should issue a judicial declaration that Generac does not infringe any claim of the '970 Patent.

## THIRTEENTH CAUSE OF ACTION

## Declaratory Judgment of Non-infringement of the '895 Patent

211. Generac incorporates by reference and realleges each and every allegation of the preceding paragraphs as if fully set forth herein.

212. There exists an actual case or controversy between Generac and Champion because of Champion's claims of infringement of the '895 Patent.

213. Generac is entitled to make and sell the Generac Accused Generators because Generac does not directly or indirectly infringe, either literally or under the doctrine of equivalents, any claim of the '895 Patent.

214. For example, and without limitation, the Generac Accused Generators lack a "mechanical fuel valve" and/or "fuel lockout apparatus" as required by the claims of the '895 Patent.

215. Because a definite and concrete dispute exists between Generac and Champion regarding Generac's alleged infringement of the '895 Patent, this Court should issue a judicial declaration that Generac does not infringe any claim of the '895 Patent.

## FOURTEENTH CAUSE OF ACTION

## Declaratory Judgment of Invalidity of the '101 Patent

216. Generac incorporates by reference and realleges each and every allegation of the preceding paragraphs as if fully set forth herein.

217. There exists an actual case or controversy between Generac and Champion because of Champion's claims of infringement of the '101 Patent.

218. Generac is entitled to make and sell the Generac Accused Generators because all of the claims of the '101 Patent are invalid for failure to satisfy one or more of the requirements of Sections 101, 102, 103, and/or 112 of Title 35 of the United States Code.

219. For example, and without limitation, the asserted claims of the '101 Patent are invalid under 35 U.S.C. § 103 over Hallberg under Champion's apparent claim construction underlying its assertion of infringement against the Generac Accused Generators.

220. Because a definite and concrete dispute exists between Generac and Champion regarding Generac's alleged infringement of the '101 Patent, this Court should issue a judicial declaration that all claims of the '101 Patent are invalid.

**FIFTEENTH CAUSE OF ACTION**

**Declaratory Judgment of Invalidity of the '667 Patent**

221. Generac incorporates by reference and realleges each and every allegation of the preceding paragraphs as if fully set forth herein.

222. There exists an actual case or controversy between Generac and Champion because of Champion's claims of infringement of the '667 Patent.

223. Generac is entitled to make and sell the Generac Accused Generators because all of the claims of the '667 Patent are invalid for failure to satisfy one or more of the requirements of Sections 101, 102, 103, and/or 112 of Title 35 of the United States Code.

224. For example, and without limitation, at least one of the asserted claims of the '667 Patent is invalid under 35 U.S.C. § 103 over Hallberg under Champion's apparent claim construction underlying its assertion of infringement against the Generac Accused Generators.

225. Because a definite and concrete dispute exists between Generac and Champion regarding Generac's alleged infringement of the '667 Patent, this Court should issue a judicial declaration that all claims of the '667 Patent are invalid.

## SIXTEENTH CAUSE OF ACTION

## Declaratory Judgment of Invalidity of the '896 Patent

226. Generac incorporates by reference and realleges each and every allegation of the preceding paragraphs as if fully set forth herein.

227. There exists an actual case or controversy between Generac and Champion because of Champion's claims of infringement of the '896 Patent.

228. Generac is entitled to make and sell the Generac Accused Generators because all of the claims of the '896 Patent are invalid for failure to satisfy one or more of the requirements of Sections 101, 102, 103, and/or 112 of Title 35 of the United States Code.

229. For example, and without limitation, at least one of the asserted claims of the '896 Patent is invalid under 35 U.S.C. § 103 over Hallberg under Champion's apparent claim construction underlying its assertion of infringement against the Generac Accused Generators.

230. Because a definite and concrete dispute exists between Generac and Champion regarding Generac's alleged infringement of the '896 Patent, this Court should issue a judicial declaration that all claims of the '896 Patent are invalid.

## SEVENTEENTH CAUSE OF ACTION

## Declaratory Judgment of Invalidity of the '780 Patent

231. Generac incorporates by reference and realleges each and every allegation of the preceding paragraphs as if fully set forth herein.

232. There exists an actual case or controversy between Generac and Champion because of Champion's claims of infringement of the '780 Patent.

233. Generac is entitled to make and sell the Generac Accused Generators because all of the claims of the ’780 Patent are invalid for failure to satisfy one or more of the requirements of Sections 101, 102, 103, and/or 112 of Title 35 of the United States Code.

234. For example, and without limitation, at least one of the asserted claims of the ’780 Patent is invalid under 35 U.S.C. §§ 102 or 103 over the Champion dual fuel generator 100153, alone and/or in combination with the ’273 Patent, under Champion’s apparent claim construction underlying its assertion of infringement against the Generac Accused Generators.

235. Because a definite and concrete dispute exists between Generac and Champion regarding Generac’s alleged infringement of the ’780 Patent, this Court should issue a judicial declaration that all claims of the ’780 Patent are invalid.

## EIGHTEENTH CAUSE OF ACTION

## Declaratory Judgment of Invalidity of the ’398 Patent

236. Generac incorporates by reference and realleges each and every allegation of the preceding paragraphs as if fully set forth herein.

237. There exists an actual case or controversy between Generac and Champion because of Champion’s claims of infringement of the ’398 Patent.

238. Generac is entitled to make and sell the Generac Accused Generators because all of the claims of the ’398 Patent are invalid for failure to satisfy one or more of the requirements of Sections 101, 102, 103, and/or 112 of Title 35 of the United States Code.

239. For example, and without limitation, at least one of the asserted claims of the ’398 Patent is invalid under 35 U.S.C. §§ 102 or 103 over the Champion dual fuel generator 100153, alone and/or in combination with the ’273 Patent, under Champion’s apparent claim construction underlying its assertion of infringement against the Generac Accused Generators.

240. Because a definite and concrete dispute exists between Generac and Champion regarding Generac's alleged infringement of the '398 Patent, this Court should issue a judicial declaration that all claims of the '398 Patent are invalid.

## NINETEENTH CAUSE OF ACTION

## Declaratory Judgment of Invalidity of the '120 Patent

241. Generac incorporates by reference and realleges each and every allegation of the preceding paragraphs as if fully set forth herein.

242. There exists an actual case or controversy between Generac and Champion because of Champion's claims of infringement of the '120 Patent.

243. Generac is entitled to make and sell the Generac Accused Generators because all of the claims of the '120 Patent are invalid for failure to satisfy one or more of the requirements of Sections 101, 102, 103, and/or 112 of Title 35 of the United States Code.

244. For example, and without limitation, at least one of the asserted claims of the '120 Patent is invalid under 35 U.S.C. §§ 102 or 103 over the Champion dual fuel generator 100153, alone and/or in combination with the '273 Patent, under Champion's apparent claim construction underlying its assertion of infringement against the Generac Accused Generators.

245. Because a definite and concrete dispute exists between Generac and Champion regarding Generac's alleged infringement of the '120 Patent, this Court should issue a judicial declaration that all claims of the '120 Patent are invalid.

## TWENTIETH CAUSE OF ACTION

## Declaratory Judgment of Invalidity of the '145 Patent

246. Generac incorporates by reference and realleges each and every allegation of the preceding paragraphs as if fully set forth herein.

247. There exists an actual case or controversy between Generac and Champion because of Champion's claims of infringement of the '145 Patent.

248. Generac is entitled to make and sell the Generac Accused Generators because all of the claims of the '145 Patent are invalid for failure to satisfy one or more of the requirements of Sections 101, 102, 103, and/or 112 of Title 35 of the United States Code.

249. For example, and without limitation, at least one of the asserted claims of the '145 Patent is invalid under 35 U.S.C. §§ 102 or 103 over the Champion dual fuel generator 100153, alone and/or in combination with the '273 Patent, under Champion's apparent claim construction underlying its assertion of infringement against the Generac Accused Generators.

250. Because a definite and concrete dispute exists between Generac and Champion regarding Generac's alleged infringement of the '145 Patent, this Court should issue a judicial declaration that all claims of the '145 Patent are invalid.

## TWENTY FIRST CAUSE OF ACTION

## Declaratory Judgment of Invalidity of the '985 Patent

251. Generac incorporates by reference and realleges each and every allegation of the preceding paragraphs as if fully set forth herein. nineteenth

252. There exists an actual case or controversy between Generac and Champion because of Champion's claims of infringement of the '985 Patent.

253. Generac is entitled to make and sell the Generac Accused Generators because all of the claims of the '985 Patent are invalid for failure to satisfy one or more of the requirements of Sections 101, 102, 103, and/or 112 of Title 35 of the United States Code.

254. For example, and without limitation, at least one of the asserted claims of the '985 Patent is invalid under 35 U.S.C. §§ 102 or 103 over the Champion dual fuel generator 100153,

alone and/or in combination with the ’273 Patent, under Champion’s apparent claim construction underlying its assertion of infringement against the Generac Accused Generators.

255. Because a definite and concrete dispute exists between Generac and Champion regarding Generac’s alleged infringement of the ’985 Patent, this Court should issue a judicial declaration that all claims of the ’985 Patent are invalid.

**TWENTY SECOND CAUSE OF ACTION**

**Declaratory Judgment of Invalidity of the ’654 Patent**

256. Generac incorporates by reference and realleges each and every allegation of the preceding paragraphs as if fully set forth herein.

257. There exists an actual case or controversy between Generac and Champion because of Champion’s claims of infringement of the ’654 Patent.

258. Generac is entitled to make and sell the Generac Accused Generators because all of the claims of the ’654 Patent are invalid for failure to satisfy one or more of the requirements of Sections 101, 102, 103, and/or 112 of Title 35 of the United States Code.

259. For example, and without limitation, at least one of the asserted claims of the ’654 Patent is invalid under 35 U.S.C. §§ 102 or 103 over the Champion dual fuel generator 100153, alone and/or in combination with the ’273 Patent, under Champion’s apparent claim construction underlying its assertion of infringement against the Generac Accused Generators.

260. Because a definite and concrete dispute exists between Generac and Champion regarding Generac’s alleged infringement of the ’654 Patent, this Court should issue a judicial declaration that all claims of the ’654 Patent are invalid.

## TWENTY THIRD CAUSE OF ACTION

**Declaratory Judgment of Invalidity of the ’970 Patent**

261. Generac incorporates by reference and realleges each and every allegation of the preceding paragraphs as if fully set forth herein.

262. There exists an actual case or controversy between Generac and Champion because of Champion’s claims of infringement of the ’970 Patent.

263. Generac is entitled to make and sell the Generac Accused Generators because all of the claims of the ’970 Patent are invalid for failure to satisfy one or more of the requirements of Sections 101, 102, 103, and/or 112 of Title 35 of the United States Code.

264. For example, and without limitation, at least one of the asserted claims of the ’970 Patent is invalid under 35 U.S.C. §§ 102 or 103 over the Champion dual fuel generator 100153, alone and/or in combination with the ’273 Patent, under Champion’s apparent claim construction underlying its assertion of infringement against the Generac Accused Generators.

265. Because a definite and concrete dispute exists between Generac and Champion regarding Generac’s alleged infringement of the ’970 Patent, this Court should issue a judicial declaration that all claims of the ’970 Patent are invalid.

## TWENTY FOURTH CAUSE OF ACTION

**Declaratory Judgment of Invalidity of the ’895 Patent**

266. Generac incorporates by reference and realleges each and every allegation of the preceding paragraphs as if fully set forth herein.

267. There exists an actual case or controversy between Generac and Champion because of Champion’s claims of infringement of the ’895 Patent.

268. Generac is entitled to make and sell the Generac Accused Generators because all of the claims of the ’895 Patent are invalid for failure to satisfy one or more of the requirements of Sections 101, 102, 103, and/or 112 of Title 35 of the United States Code.

269. For example, and without limitation, at least one of the asserted claims of the ’895 Patent is invalid under 35 U.S.C. §§ 102 or 103 over the Champion dual fuel generator 100153, alone and/or in combination with the ’273 Patent, under Champion’s apparent claim construction underlying its assertion of infringement against the Generac Accused Generators.

270. Because a definite and concrete dispute exists between Generac and Champion regarding Generac’s alleged infringement of the ’895 Patent, this Court should issue a judicial declaration that all claims of the ’895 Patent are invalid.

## TWENTY FIFTH CAUSE OF ACTION

### Declaratory Judgment of Unenforceability of the 2015 Patent Family

271. Generac incorporates by reference and realleges each and every allegation of the preceding paragraphs as if fully set forth herein.

272. There exists an actual case or controversy between Generac and Champion because of Champion’s claims of infringement of the ’780 Patent, ’398 Patent, ’120 Patent, ’145 Patent, ’985 Patent, ’654 Patent, ’970 Patent, and ’895 Patent.

273. Generac is entitled to make and sell the Generac Accused Generators because the claims of the 2015 Patent Family are unenforceable due to the inequitable conduct of the Named Inventors, Prosecuting Attorneys, and/or Champion Officers.

274. The Named Inventors, Prosecuting Attorneys, and/or Champion Officers engaged in inequitable conduct by knowingly and intentionally withholding but-for material prior art relevant to the 2015 Patent Family with the specific intent to deceive the PTO. The Named Inventors, Prosecuting Attorneys, and/or Champion Officers specifically withheld material

information regarding the RD9000E dual fuel generator, publicly available manuals for the same, and public displays of the same.

275. The Named Inventors, Prosecuting Attorneys, and/or Champion Officers had knowledge of the RD9000E dual fuel generator and its public use and sales prior to June 12, 2015, prior to and during the prosecution of the 2015 Patent Family. The Named Inventors, Prosecuting Attorneys, and/or Champion Officers inspected the RD9000E generator while attending a trade show, after purchasing a sample, and on invitation from Firman.

276. The conduct of Named Inventors, Prosecuting Attorneys, and Champion Officers, taken as a whole, demonstrates lack of candor and specific intent to deceive the PTO. But-for the nondisclosure of the RD9000E dual fuel generator, claims of the 2015 Patent Family would not have been granted.

277. As a result of Champion's inequitable conduct, Generac has been forced to defend a baseless patent infringement lawsuit.

278. Champion's allegations of patent infringement pose a threat to Generac's business and have harmed and will continue to cause competitive injury to Generac until such claims are resolved.

279. This Court should issue a judicial declaration that each patent in the 2015 Patent Family is unenforceable.

280. Generac also seeks any further relief deemed appropriate by this Court pursuant to 28 U.S.C. § 2202.

**JURY DEMAND**

Pursuant to Rule 38(b) of the Federal Rules of Civil Procedure, Generac hereby demands a trial by jury on all issues triable as a matter of right by a jury.

## GENERAC'S PRAYER FOR RELIEF

Generac prays for relief as follows:

A. Judgment in favor of Generac that it does not infringe any claim of the '780 Patent, '101 Patent, '398 Patent, '120 Patent, '145 Patent, '667 Patent, '985 Patent, '654 Patent, '970 Patent, '895 Patent, and '896 Patent, whether literally or under the doctrine of equivalents, or whether directly or indirectly, or in any other respect under 25 U.S.C. § 271;

B. Judgment in favor of Generac that the claims of the '780 Patent, '101 Patent, '398 Patent, '120 Patent, '145 Patent, '667 Patent, '985 Patent, '654 Patent, '970 Patent, '895 Patent, and '896 Patent are invalid for failure to satisfy one or more of the requirements of Sections 101, 102, 103, and/or 112 of Title 35 of the United States Code;

C. Judgment in favor of Generac that the '780 Patent, '398 Patent, '120 Patent, '145 Patent, '985 Patent, '654 Patent, '970 Patent, and '895 Patent are invalid and unenforceable due to the inequitable conduct of the Named Inventors, Prosecuting Attorneys, and Champion Officers;

D. A finding that Champion is not entitled to any relief, including without limitation injunctive and/or monetary relief;

E. Damages, in the amount to be determined at trial, including but not limited to all costs and attorney fees incurred by Generac in defending against Champion's claims of infringement related to the '780 Patent, '101 Patent, '398 Patent, '120 Patent, '145 Patent, '667 Patent, '985 Patent, '654 Patent, '970 Patent, '895 Patent, and '896 Patent;

F. A finding that Champion's allegations of infringement against Generac are objectively baseless;

G. Judgment in favor of Generac that the Champion CO Shield Products, including at least exemplary products 9200W Electric Start Dual Fuel Generator with CO Shield, 3650W Dual

Fuel Generator with CO Shield, and 3650W Wireless Start Generator with CO Shield, infringe at least one claim of the ’596 Patent and/or at least one claim of the ’540 Patent;

H. A finding that Champion’s infringement was willful;

I. Entry of an injunction enjoining infringement of the ’596 Patent and/or the ’540 Patent by Champion, its officers, agents, servants, employees, subsidiaries, attorneys, and those acting in concert with them, including related individuals and entities, customers, representatives, original equipment manufacturers (“OEMs”), dealers, and distributors;

J. Damages, in the amount to be determined at trial, adequate to compensate Generac for Champion’s infringement, including but not limited to treble damages and any other enhanced damages permitted by 35 U.S.C. § 284, along with pre-judgment and post-judgment interest on such damages to the maximum extent allowed under the law;

K. A finding that this case is exceptional and an award to Generac of costs, expenses, and its attorney fees pursuant to 35 U.S.C. § 285, Rules 11(c) and 54(d) of the Federal Rules of Civil Procedure, and any other applicable statute or rule, or inherent authority of the Courts; and

L. For such other relief as the Court deems proper.

Date: May 15, 2025

**MERCHANT & GOULD P.C.**
/s/ *Thomas J. Leach*

Thomas J. Leach (MN # 0311844)
Michael Erbele (MN # 0393635)
Joe Dubis (MN # 0398344)
MERCHANT & GOULD P.C.
150 South Fifth Street, Suite 2200
Minneapolis, MN 55402
(612) 332-5300
tleach@merchantgould.com
merbele@merchantgould.com
jdubis@merchantgould.com

**REINHART BOERNER VAN DEUREN, S.C.**
Paul J. Stockhausen
Monica A. Mark
REINHART BOERNER VAN DEUREN, S.C.
22 East Mifflin Street, Suite 700
Madison, WI 53703
Tel.: 608-229-2200
Fax: 608-229-2100
pstockhausen@reinhartlaw.com
mmark@reinhartlaw.com

***Attorneys for Defendant***