Merchant & Gould

A Technology & Innovation Law Firm

Mr. Sam Sumitani
Stetina Brunda Garred & Brucker, PC
75 Enterprise, Suite 250
Aliso Viejo, California 92656

Benjamin A. Tramm
btramm@merchantgould.com
612.371.5234

July 31, 2020

VIA EMAIL: ssumitani@stetinalaw.com

RE: Powermate Dual Fuel Products
M&G Ref. 04934.0158USAA

Dear Mr. Sumitani:

Merchant & Gould represents Generac Power Systems, Inc. and its wholly-owned subsidiaries, including Powermate, LLC, in connection with intellectual property matters.

This is in response to your letter of July 7, 2020 accusing Powermate's DF3500E and DF7500E products ("the Powermate products") of infringing on Champion's U.S. Patent No. 10,598,101 ("the '101 patent").

We have carefully reviewed your assertions and disagree that the Powermate products infringe on the '101 patent. Champion's patent describes a dual fuel selector switch 30 (reproduced below). The switch 30 slides back and forth over fuel valve handles associated with different fuel sources. When in a first position 56, the switch 30 allows the first valve 34 to be manually rotated by an operator to the ON position, while simultaneously preventing a second valve 26 (behind plate 30) from being turned on. When in the second position (58, FIG. 6), the switch 30 allows the second valve 26 to be rotated to the ON position, while simultaneously preventing the first valve 34 from being turned on.

Excerpt from FIG. 5 of the '101 Patent

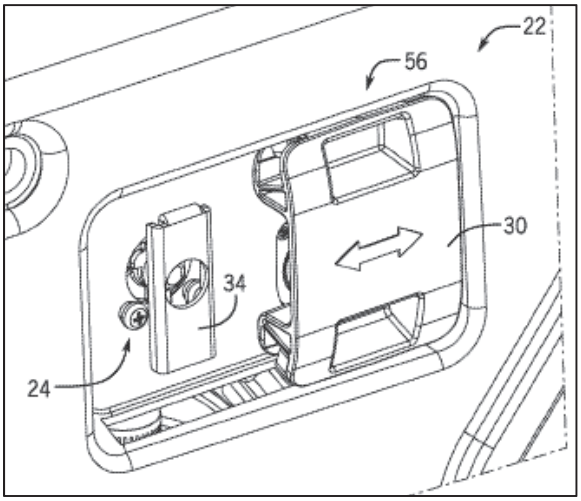

The ‘101 patent only describes and claims a ***two-step process*** involving a selector switch that covers and slides over a pair of manually rotatable valves, in which an operator must first move the selector switch 30 to the desired position to allow access to one of the valves, and second, turn on the respective valve to permit fuel to flow.

All of claims 1, 17, and 18 of the ‘101 patent acknowledge this and require the two-step process. For example, claim 1 requires “a valve assembly operable to selectively control a first fuel flow and a second fuel flow.” Claim 1 also requires a separate “selector switch.” The selector switch is separate and distinct from the valve assembly and is “positioned on the valve assembly to allow a user to manually select one of the first fuel flow and the second fuel flow.” In other words, the user must first manually slide the selector switch to the desired position, and then the operator can manually turn on the respective valve of the valve assembly to control the fuel flow.

Claims 17 and 18 include similar limitations. Claim 17 says: “wherein ***positioning*** of the selector switch in the first fuel mode and the second fuel mode ***enables a selection*** of one of the first fuel flow and the second fuel flow.” Claim 18 says “a selector switch ***positioned*** on the valve assembly to ***allow a user to manually select*** one of the first fuel flow and the second fuel flow.”

In sharp contrast to the claimed two-step process and selector switch, the Powermate products have a simple fuel selection dial, as shown below. When the dial is rotated to the left, one fuel source is selected, and when positioned to the right, a different fuel source is selected. Thus, the Powermate products do not have a selector switch, and do not involve the claimed two-step process that is required by claims 1, 17, and 18 of the ‘101 patent.

Dial of the Powermate DF3500E

We have also analyzed the file history and reviewed the prior art, and we believe the claims of the ‘101 patent are invalid, particularly in view of Champion’s extremely broad interpretation of the claim language presented in your claim chart. Specifically, Champion’s allegation that the claims are so broad that they read on the single-step fuel selection dial, means that the claims are also invalid over the prior art.

Champion is not the first company to have developed a dual fuel generator with a selector switch for selecting between two fuel sources. To the contrary, such generators have been known for decades before the earliest priority date of the '101 patent. In fact, the very first document cited by the US PTO (Poehlman, US 4,489,699, filed in 1982—more than 30 years before the '101 patent's earliest priority date) shows a selector switch for selecting between two fuel sources!

Therefore, we disagree with Champion's assertions because the Powermate products do not infringe on the claims of the '101 patent, and because Champion's broad reading of its own claims shows that the claims are also invalid over decades old prior art.

Nevertheless, well before and for reasons unrelated to your letter, Powermate had already decided to begin phasing out the accused Powermate products. When your letter was received, Powermate had only approximately 63 units remaining in stock, and has not ordered or received additional units since that time. Powermate currently has no plans to (but makes no promises that it will not) obtain additional units, and has no plans to continue selling the accused products after the existing inventory is depleted.

Finally, we wish to bring to your attention that Generac greatly values its intellectual property, and has invested substantial resources in research and development relating to generator technology. Recently, for example, Generac has obtained patents relating to carbon monoxide detection (US 10,563,596), and to calculating remaining run times based on current fuel level (US 9,719,827). Generac has other patents granted and pending.

We trust that this brings this matter to a close.

Sincerely,

MERCHANT & GOULD P.C.

Benjamin A. Tramm