May 21, 1968 R. D. KOPA 3,384,059

CARBURETION SYSTEM WITH IMPROVED FUEL-AIR RATIO CONTROL SYSTEM

Filed Oct. 22, 1965 3 Sheets-Sheet 1

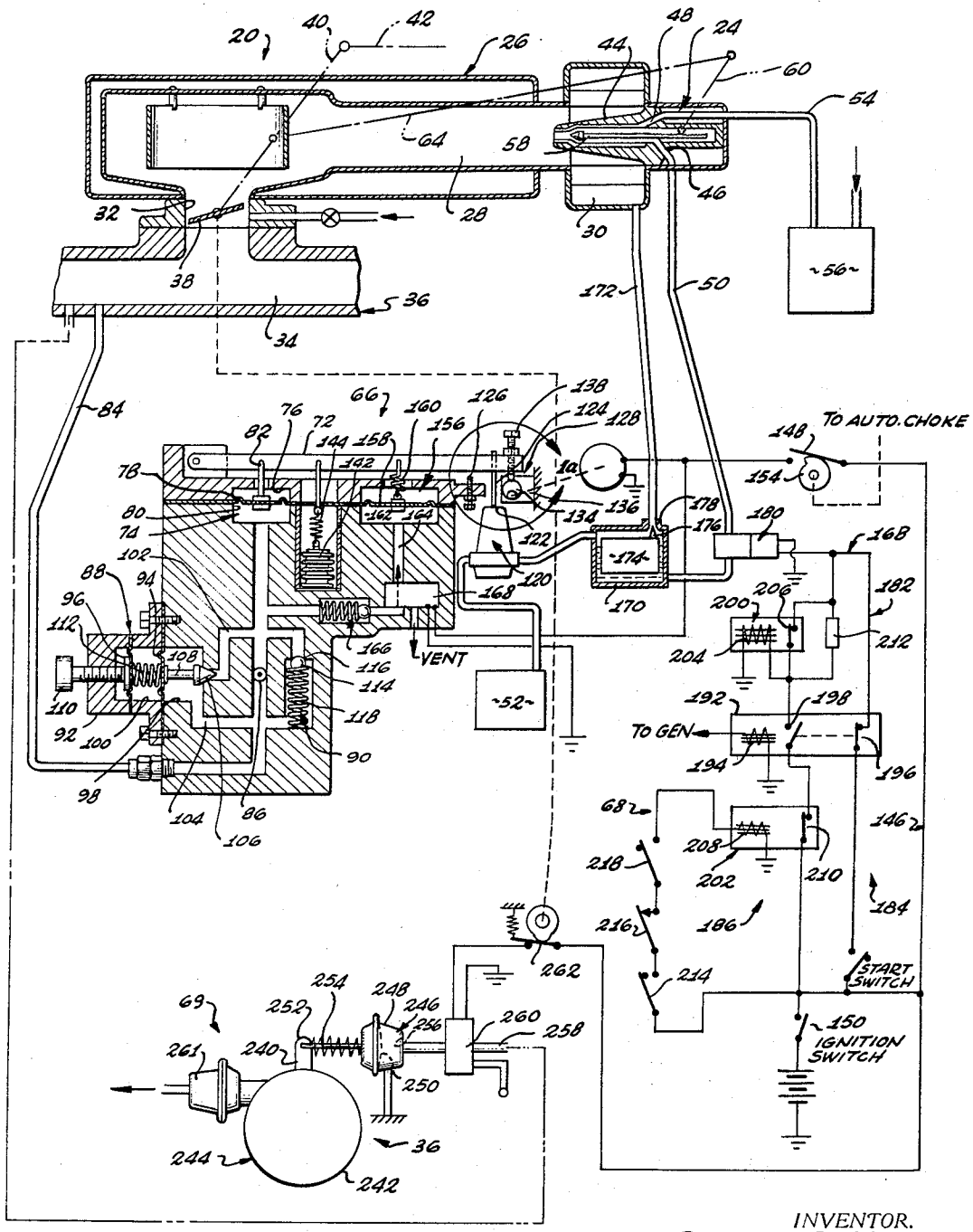

Fig. 1

INVENTOR.
RICHARD D. KOPA
BY Forrest J. Lilly
ATTORNEY

CARBURETION SYSTEM WITH IMPROVED FUEL-AIR RATIO CONTROL SYSTEM

Filed Oct. 22, 1965 3 Sheets-Sheet 2

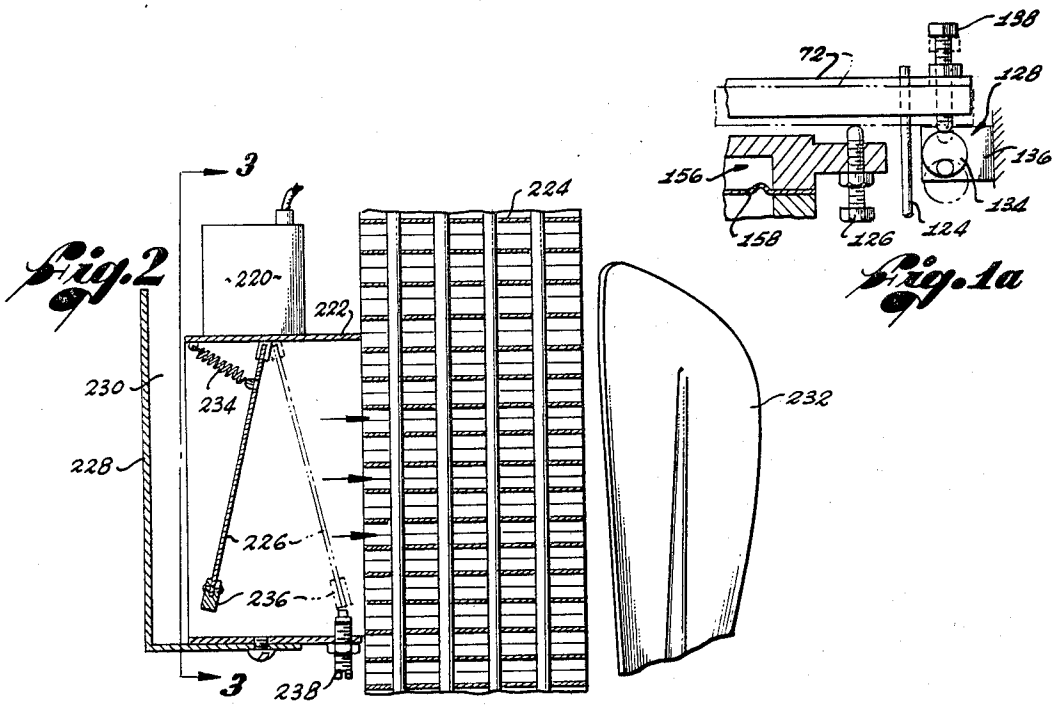

Fig. 2

Fig. 1a

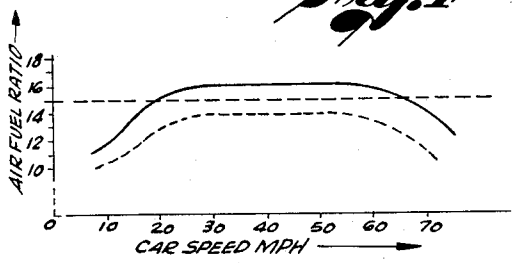

Fig. 4

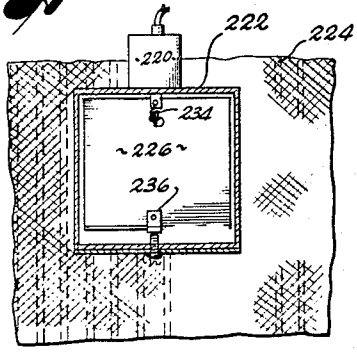

Fig. 3

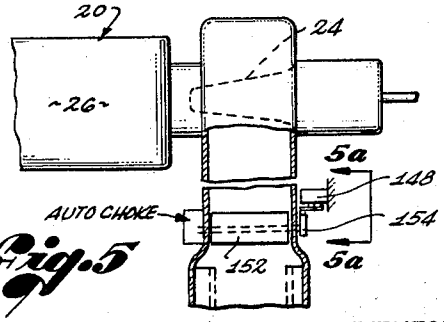

Fig. 5

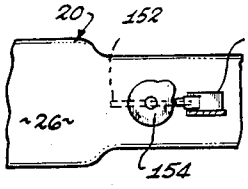

Fig. 5a

INVENTOR.
RICHARD D. KOPA
BY Forrest J. Lilly
ATTORNEY

CARBURETION SYSTEM WITH IMPROVED FUEL-AIR RATIO CONTROL SYSTEM

Filed Oct. 22, 1965 3 Sheets-Sheet 3

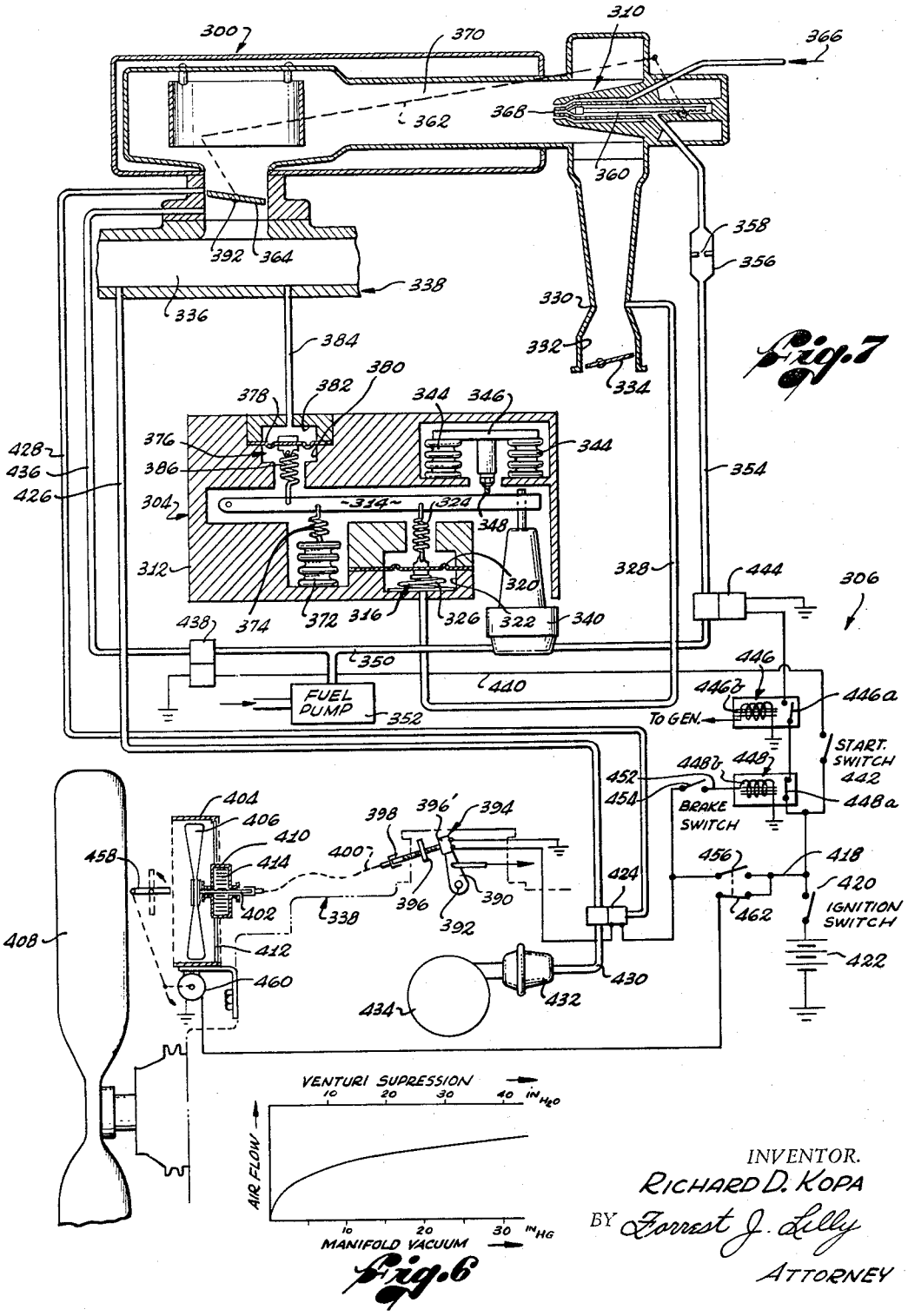

Fig. 7

Fig. 6

United States Patent Office

3,384,05

Patented May 21, 196

1

3,384,059

CARBURETION SYSTEM WITH IMPROVED FUEL-AIR RATIO CONTROL SYSTEM

Richard D. Kopa, Van Nuys, Calif., assignor to The Regents of the University of California, a corporation of California

Filed Oct. 22, 1965, Ser. No. 502,090
8 Claims. (Cl. 123—97)

ABSTRACT OF THE DISCLOSURE

A carburetor fuel-air ratio control system embodying a fuel injection nozzle through which fuel is injected under pressure into the carburetor mixing chamber, a fuel pressure regulator for regulating the fuel pressure to the nozzle, and a mechanical linkage between the carburetor throttle valve and a fuel metering valve in the nozzle for effecting unified positioning of these valves in response to operation of the throttle pedal. The fuel pressure regulator is actuated by a transducer which responds to several variables related to engine operation, including atmospheric pressure, engine temperature, and engine air demand, and generates an integrated output signal related to these several variables for positioning the regulating valve of the fuel pressure regulator. This actuation of the fuel pressure regulator occurs in concert with unified adjustment of the throttle valve and nozzle fuel metering valve.

This invention relates generally to carburetors for internal combustion engines and has more particular reference to a novel fuel-air ratio control system for fuel injection carburetors.

In recent years, air pollution has become a major problem and, as a consequence, the subject of numerous research programs throughout the world. The primary reason for this concentrated effort in the area of air pollution is the detrimental effect of such air pollution on human health. As a result of the many research programs which have been conducted in the past and are currently in progress, it is now known that the exhaust gas emissions from internal combustion engines, particularly gasoline powered motor vehicle engines, constitute a major source of air pollution. For instance, estimates based on the extrapolation of air pollution data obtained from extensive studies in the Los Angeles area of California yield the following figures for the nationwide annual discharge of contaminants into the atmosphere from gasoline powered vehicles:

	Tons
Carbon monoxide	90,000,000
Hydrocarbons	12,000,000
Nitrogen oxides	4,500,000 to 13,500,000
Aldehydes	150,000
Sulfur compounds	150,000 to 300,000
Organic acids	60,000
Ammonia	60,000
Solids	9,000

It is apparent from the above data that the three major contaminants present in the exhaust from gasoline engines are carbon monoxide, unburned hydrocarbons, and nitrogen oxides. Accordingly, a reduction in these three contaminants would constitute a significant advance in the conquest of air pollution.

My copending application, Ser. No. 345,881, filed Feb. 19, 1964, and entitled Fuel Atomizing Carburetors, discloses improved carburetion devices which are highly effective in reducing exhaust emission of the three major contaminants, just mentioned. These improved carbure-

2

tion devices utilize two known techniques for reducin exhaust contaminants. One of these techniques is that c recycling exhaust gas, or other inert fluid, either liquid c gaseous, through the engine to reduce the peak combu tion temperature, and thereby, the formation of nitroge oxides. The second technique is that of effecting sub stantially total vaporization of the fuel and substantiall complete homogeneous intermixing of the fuel vapor, i duction air, and recycled exhaust gas to permit engin operation at a more lean fuel-air ratio and thereb achieve more complete combustion of the hydrocarbor in the fuel and reduce the formation of carbon monoxid

One primary aspect of the invention disclosed in m copending application is concerned with a novel carbure or geometry whereby total vaporization of the fuel an complete homogeneous intermixing of the fuel vapor, i duction air, and exhaust gas is achieved, thereby to pe mit engine operation at a more lean fuel-air ratio than possible with conventional carburetors. A second primai aspect of the invention disclosed in my copending a plication is concerned with a novel fuel-air ratio contr system for regulating the rate of fuel injection into t induction air stream in such manner as to maintain t proper lean fuel-air ratio over the entire engine opera ing range.

At this point, it is well to consider briefly the reason f and the operation of the fuel-air ratio control system the copending application. The carburetors disclosed the latter application are equipped with a fuel injectic nozzle which is supplied with fuel under pressure ar sprays the fuel into the induction air stream. Includ in the nozzle is a fuel flow regulating valve, such as needle valve, for regulating the rate of fuel injectio This fuel valve is operatively connected to the throt valve in such manner that the fuel valve is adjusted unison with the throttle valve, thereby to maintain t proper fuel-air ratio. Such unified adjustment of t throttle valve and the fuel valve, however, is effective maintain the proper fuel-air ratio only under certa engine operating conditions, to wit, only when the indu tion air flow through the carburetor remains constant a given throttle valve setting regardless of intake mar fold vacuum. This condition of constant induction a flow at a given throttle valve setting exists so long the pressure drop across the throttle valve is critical, su that fluctuations in the downstream pressure, i.e., inta manifold vacuum, produce no change in the induction a flow past the throttle valve. In a typical internal combu tion engine, this critical pressure drop occurs across t throttle valve when the intake manifold vacuum equa or exceeds 15 inches of mercury. When the intake mar fold vacuum drops below 15 inches, due to increas loading on the engine, for example, the pressure dr across the throttle valve becomes less than critical. Und these conditions, the rate of induction air flow throu the carburetor at any given throttle valve setting vari in accordance with a function of intake manifold vac um. In the absence of any compensating action in t carburetor, on the other hand, the rate of fuel injecti would remain constant at a value determined by the fix setting of the throttle valve. Such a constant rate of fu injection and variable rate of induction air flow obvious would result in a correspondingly variable fuel-air rat Accordingly, in order to maintain the proper fuel- ratio when the intake manifold vacuum drops below inches, it is necessary to regulate the rate of fuel inj tion both in response to adjustment of the throttle val and in response to engine air demand.

To this end, the fuel-air ratio control system of copending application includes, in addition to the ope

ive connection between the throttle valve and fuel valve of the fuel injection nozzle, a fuel pressure regulator for egulating the pressure of the fuel delivered to the fuel njection nozzle in accordance with a function of the ntake manifold vacuum. When the intake manifold vacuum is less tha 15 inches, this fuel pressure regulator varies the fuel pressure to the carburetor nozzle in response to changes in the manifold vacuum level in such a way as to maintain an optimum fuel-air ratio at all hrottle valve settings in this operating range. The fuel pressure regulator delivers a constant fuel pressure to he nozzle when the intake manifold vacuum level equals or exceeds about 15 inches. Thereafter, the fuel-air ratio o the engine is regulated solely by unified adjustment of the throttle valve and nozzle fuel valve.

It is a principal object of this invention to provide an mproved fuel-air ratio control system for carburetion levices of the class described.

A more specific object of the invention is to provide a fuel-air ratio control system wherein the rate of fuel njection into the induction air stream entering the carburetor and, hence, the fuel-air ratio of the combustible nixture delivered to the engine are regulated both by unified adjustment of the carburetor throttle valve and a uel metering valve in the carburetor fuel injection nozzle and by regulating the fuel pressure to the nozzle, and wherein, further, the fuel pressure to the nozzle is regulated in response to several variables related to engine operation, including engine air demand, engine temperature, and atmosperic pressure, all in such manner as to achieve an optimum fuel-air ratio over the entire engine operating range.

Another object of the invention is to provide a fuel-air ratio control system which is effective to automatically enrich the combustible mixture delivered to the engine during cold engine starting, idling and running and progressively lean the mixture as the engine approaches its normal operating temperature.

Yet another object of the invention is to provide a fuel-air ratio control system which is effective to automatically lean the combustible mixture to the engine in response to decreasing atmospheric pressure and enrich the mixture in response to increasing atmospheric pressure, thereby to attain optimum engine performance at all altitudes.

A further object of the invention is to provide a fuel-air ratio control system wherein the fuel pressure to he carburetor fuel injection nozzle is automatically regulated in a new and unique way during acceleration to enrich the combustible mixture delivered to the engine, hus to provide maximum engine power during acceleration.

Yet a further object of the invention is to provide a fuel-air ratio control system which is effective to materially reduce exhaust emission of unburned hydrocarbons during deceleration.

A still further object of the invention is to provide a fuel-air ratio control system of the character described which is relatively simple in construction, economical to manufacture, easy to install on most, if not all, makes of automotive vehicles, reliable in operation, and otherwise ideally suited to its intended purposes.

Other objects, advantages, and features of the invention will appear as the description proceeds.

Briefly, the objects of the invention are attained by providing a carburetor fuel-air ratio control system embodying certain of the same basic components as the control system disclosed in my aforementioned copending application, Ser. No. 345,881, to wit, a fuel injection nozzle through which fuel is injected under pressure into he carburetor mixing chamber, a fuel pressure regualtor or regulating the fuel pressure to the nozzle, and a mechanical linkage between the carburetor throttle valve and a fuel metering valve in the nozzle for effecting unified positioning of these valves in response to operation of

the throttle pedal. In contrast to the earlier control system, however, the fuel pressure regulator in the present control system is actuated by a transducer which responds to several variables related to engine operation, including atmospheric pressure, engine temperature, and engine air demand, and generates an integrated output signal related to these several variables for positioning the regulating valve of the fuel pressure regulator. This actuation of the fuel pressure regulator occurs in concert with unified adjustment of the throttle valve and nozzle fuel metering valve.

Thus, during starting, idling, and running, the present fuel-air ratio control system delivers fuel to the carburetor nozzle at proper pressure to yield the optimum fuel air for the existing engine temperature and atmospheric pressure. In other words, the combustible mixture delivered to the engine is automatically enriched during cold engine starting, idling and running and is progressively leaned as the engine approaches its normal operating temperature. Also, the fuel pressure to the carburetor nozzle is automatically regulated in response to changes in atmospheric pressure in such a way that the combustible mixture to the engine is automatically made more lean as the altitude increases and enriched as the altitude decreases. In one illustrative embodiment of the invention, the automatic fuel enrichment means for cold engine operation are electrically actuated in response to the setting of the automatic choke valve. In a second embodiment, the automatic fuel enrichment means are pneumatically actuated in response to the suppression in the carburetor induction air passage, directly downstream of the automatic choke valve. In both embodiments, the response of the control system to atmospheric pressure changes is accomplished by ambient pressure sensing means embodied in the fuel-pressure-regulator-actuating transducer.

At any fixed throttle valve setting, the control system regulates the fuel pressure to the carburetor nozzle in response to changes in engine air demand occasioned by changes in loading on the engine and in such a way as to maintain an optimum fuel-air ratio. In one illustrative embodiment, this is accomplished by rendering the fuel-pressure-regulator-actuating transducer responsive to intake manifold vacuum in such a way that the fuel pressure to the carburetor nozzle and, hence, the fuel-air ratio to the engine are regulated in response to the intake manifold vacuum level when the pressure drop across the throttle valve is less than critical. When this pressure drop equals or exceeds critical, the fuel-air ratio is regulated solely by unified adjustment of the throttle valve and nozzle fuel metering valve. In the second illustrative embodiment, the fuel-pressure-regulator-actuating transducer is rendered responsive to the flow rate of induction air through the carburetor. In this case, the metering valve is rendered ineffective to regulate fuel flow through the nozzle when the rate of induction air flow through the carburetor is sufficiently high to permit accurate regulation of fuel pressure to the carburetor solely in response to induction air flow rate. When this condition exists, then, the rate of fuel injection into the carburetor, and hence the fuel-air ratio of the combustible mixture delivered to the engine, is controlled solely by the fuel pressure regulator in response to induction air flow rate. A unique and important feature of this latter embodiment resides in the fact that the response of the transducer to the induction air flow rate is provided with a non-linearity which causes the response of the control system to more closely conform to the optimum response curve.

During partial and full throttle acceleration, the present fuel-air ratio control system is rendered effective to momentarily enrich the mixture to the engine in order to provide adequate engine power for acceleration. In the first embodiment of the invention, this is accomplished by delaying or retarding the response of the fuel-pres-

sure-regulator-actuating transducer to the decrease in intake manifold vacuum occasioned by a partial acceleration command. During full throttle acceleration, the delayed response of the transducer to the drop in manifold vacuum is eliminated after a brief instant of time to avoid flooding of the engine as the vacuum level approaches atmospheric pressure. In the second embodiment of the invention, the transducer is made responsive to intake manifold vacuum in such a way that this response, combined with the transducer response to the induction air flow rate through the carburetor, is effective to enrich the mixture to the engine during partial as well as full throttle acceleration.

During deceleration, the present control system is effective to materially reduce exhaust emission of unburned hydrocarbons. In one embodiment of the invention, such reduction is accomplished by automatically retarding the engine spark, in response to certain selected engine operating conditions, in such a way as to not adversely affect engine performance. In the second embodiment, reduction of hydrocarbon emission during deceleration is accomplished by a unique combined throttle cracking and spark retarding mechanism which simultaneously cracks the throttle to reduce hydrocarbon emission and retards the spark to effect a compensating braking action.

Two illustrative embodiments of the invention will now be described by reference to the attached drawings, wherein:

FIG. 1 diagrammatically illustrates a fuel-air ratio control system according to the invention;

FIG. 1*a* is an enlargement of the area encircled by the arrow 1*a* in FIG. 1;

FIG. 2 is an endlarged vertical section through the radiator of an automotive vehicle, illustrating the manner in which one component of the control system in FIG. 1 is installed on the radiator;

FIG. 3 is a section on reduced scale taken on line 3—3 in FIG. 2;

FIG. 4 is a diagram comparing the fuel-air ratios of a standard carburetion system and the present carburetion system;

FIG. 5 is a view looking in the direction of the arrows on line 5—5 in FIG. 1;

FIG. 5*a* is a view looking in the direction of the arrows on line 5*a*—5*a* in FIG. 5;

FIG. 6 is a diagram illustrating the relationship between fuel pressure and engine intake manifold vacuum in a typical fuel-air ratio control system according to the invention; and

FIG. 7 diagrammatically illustrates an alternative fuel-air ratio control system according to the invention.

In FIG. 1 of these drawings, there is illustrated a fuel injection carburetor **20** and a fuel-air ratio control system **22** according to the invention for supplying fuel under regulated pressure to the fuel injection nozzle **24** of the carburetor. As will appear from the ensuing description, the present control system may be employed with various types of fuel injection carburetors. For convenience, however, the carburetor **20** has been illustrated as being of the type disclosed in my copending application Ser. No. 424,970, filed Jan. 12, 1965, and entitled Compound Cyclonic Flow Inductor and Improved Carburetor Embodying Same. Accordingly, the carburetor will be described herein only in sufficient detail to enable a full and complete understanding of the invention.

With this in mind, the carburetor **20** comprises a housing **26** having a mixing chamber **28**, an inlet **30** through which induction air enters one end of the chamber from an air cleaner (not shown), and an outlet **32** through which combustible mixture emerges from the other end of the mixing chamber into the intake manifold **34** of an internal combustion engine **36**. Rotatably mounted in the outlet **32** is a throttle valve **38**. The operating arm **40** of this throttle valve is connected, by a throttle rod **42**, to the accelerator pedal (not shown), whereby depression

of the pedal rotates the throttle valve **38** toward its oper position, in the usual way.

Fuel injection nozzle **24** is mounted in the inlet end o the mixing chamber **28**. This nozzle includes a body **44** having fuel and atomizing gas passages **46** and **48**, re spectively, which open through the forward end of th nozzle body into the mixing chamber. The fuel passag **46** of the nozzle is connected, via a fuel line **50**, to supply **52** of fuel under pressure. In the case of a gasolin powered engine, this fuel supply may comprise a fue tank and a fuel pump for delivering the fuel under pres sure from the tank to the carburetor. In the case of a engine powered by liquid petroleum gas, the fuel suppl may comprise a tank containing the liquid petroleum fue under pressure. As will be explained presently, the contro system **22** is effective to regulate the pressure of fuel flow ing from the fuel supply to the carburetor nozzle **24**.

The atomizing gas passage **48** in the fuel injectio nozzle **24** is connected, via a gas line **54**, to a sourc **56** of pressurized atomizing gas. If the engine **36** is gasoline powered engine, this atomizing gas may compris atmospheric air. In this event, the gas source **56** ma be an air pump whose inlet preferably communicates t the induction air stream at a point downstream of the a cleaner, as disclosed in my aforementioned copendin application Ser. No. 345,881. If the engine is powered b liquid petroleum gas, the atomizing gas may comprise fue vapor. In this event, the gas source **56** may be a heat ex changer for vaporizing the liquid petroleum fuel, as dis closed in my latter copending application.

During operation of the engine **36**, fuel and atomizin gas emerge from the forward end of the atomizing nozzl **24** into the carburetor mixing chamber **28**. The emergin gas atomizes the emerging fuel, whereby the nozzle effective to spray atomized fuel into the induction a stream entering the mixing chamber.

Fuel flow through the nozzle **24** is regulated by fuel flow regulating or metering valve **58**. This valve shown to be a needle valve disposed in the fuel passag **46**. Pivotally mounted on the nozzle body is a valve o erating arm **60**. This valve arm is operatively connecte to the fuel metering valve **58** by a rack and pinion **6** Rotation of the valve arm is thus effective to adjust th metering valve **58** and thereby regulate the rate of fu flow through the nozzle. Pivotally connected between th outer end of the valve arm **60** and the throttle arm **40** a link **64**. Operation of the throttle pedal is thus effectiv to adjust the throttle valve **38** and the fuel metering valv **58** in unison, thereby to maintain the proper fuel-a ratio for different throttle valve settings.

As noted earlier, however, such simultaneous adjus ment of the throttle valve **38** and the fuel metering valv **58** is effective to maintain the proper fuel-air ratio onl when the induction air flow through the carburetor is sole function of the throttle valve setting; that is to sa simultaneous adjustment of the throttle valve and fu metering valve is effective to maintain the proper fuel-a ratio only when the induction air flow through the ca buretor, for any given throttle setting, remains consta irrespective of the vacuum level in the engine inta manifold **34**. This latter condition exists, in turn, on when the pressure drop across the throttle valve **38** critical, which critical pressure drop occurs at an inta manifold vacuum of about 15 inches of mercury or highe If the intake manifold vacuum is less than about 1 inches, fluctuations in the vacuum level at any give setting of the throttle valve **38**, as the result of chang in the loading on the engine, for example, produce corr sponding fluctuations in the rate of induction air flo through the carburetor. Under these conditions, then, is necessary to regulate the rate of fuel injection ind pendently of the throttle valve setting in order to mai tain the proper fuel-air ratio. This latter fuel rate reg lating function is performed by the fuel-air ratio contr system **22**.

Control system 22 comprises a fuel pressure regulator 66, a fuel cut-off device 68, and an automatic engine spark retarding mechanism 69. As will appear from the ensuing description, the fuel pressure regulator 66 is effective to regulate the fuel pressure to the carburetor nozzle 24 in response to engine air demands, vacuum, atmospheric pressure, and engine temperature. The fuel cut-off device 68 is effective to entirely cut off fuel flow to the carburetor when the engine ignition system is turned off and during deceleration. The spark retarding mechanism 69 retards the engine spark during deceleration.

Fuel pressure regulator 66 embodies a transducer which responds to certain variables related to engine operation, including those just noted, and generates an integrated output signal for regulating the fuel pressure to the carburetor nozzle in response to a combined function of these variables. More specifically, the fuel pressure regulator 66 comprises a force balance system or transducer in which forces proportional to the intake manifold vacuum and atmospheric pressure are balanced against a resisting spring force to position a fuel pressure regulating valve. To this end, the fuel pressure regulator comprises a housing 70 on which is pivoted one end of a lever 72. Adjacent the lever is a pressure responsive actuator 74 including a chamber 76 in the regulator housing 70 containing a flexible diaphragm 78. Diaphragm 78 is sealed to the housing to define therein a hermetic chamber 80. Attached at one end to the center of the diaphragm is a link 82, the opposite end of which is pivotally connected to the lever 72.

The actuator chamber 80 communicates to the intake manifold 34 of the engine 36 through a vacuum passage 84. Effectively arranged in parallel in this passage are a flow restrictor 86, an adjustable surge valve 88, and a check valve 90. Flow restrictor 86 may comprise various types of flow restricting or damping devices, such as a damping valve. Surge valve 88 comprises a housing 92 secured to the regulator housing 70 and containing flexible diaphragms 94 and 96. These diaphragms are sealed to the housings 70, 92, thereby to define in the housings two hermetic chambers 98 and 100. In the wall of chamber 98 is a port 102 which communicates to the actuator chamber 80 and a port 104 which communicates to the engine intake manifold 34 through the vacuum passage 84. Surrounding the port 102 is a valve seat 106. Attached to the center of the valve diaphragm 94 is a valve member 108. Valve chamber 100 is evacuated. Threaded in the outer end of the valve housing 92 is a screw 110 which is firmly attached to the center of the outer diaphragm 96. A spring 112 within the evacuated valve chamber 100 seats at one end against the center of the inner diaphragm 94 and at the other end against the center of the outer diaphragm 96.

At this point, it is apparent that the valve spring 112 yieldably retains the valve member 108 in contact with its valve seat 106, thereby to close the valve port 102. This spring seating force on the valve member 108 is adjustable by adjustment of the valve screw 110. The seating force is opposed by internal pressure in the chamber 98, whereby the valve member 108 is unseated in response to a predetermined increase in the chamber pressure. This internal chamber pressure, of course, is that existing in the engine intake manifold 34. Thus, the surge valve 88 opens when the intake manifold vacuum decreases to a given level, determined by the setting of the valve spring adjusting screw 110. For reasons which will appear presently, the screw is adjusted, according to this invention, to effect opening of the surge valve when the engine intake manifold drops to a few inches of mercury.

Check valve 90 comprises a check valve member 114, such as a ball, which is urged against a seat 116 by a spring 118. It is to be noted that the check valve opens when the pressure in the actuator 74 exceeds the pressure in the engine intake manifold 34 by an amount proportional to the spring seating force on the valve member 114. Stated in the alternative, the check valve opens when the intake manifold vacuum exceeds the vacuum level in the actuator by an amount proportional to the valve seating force.

During steady state operation of the engine 36, the surge valve 88 and the check valve 90 are closed. Under these conditions, the pressure actuator 74 communicates with the engine intake manifold 34 solely through the flow restrictor 86 and the vacuum level in the actuator chamber 80 is approximately the same as the vacuum level in the intake manifold 34. A force proportional to the intake manifold vacuum is thereby created on the actuator diaphragm 78. This force, in turn, reacts, through the link 82, on the lever 72 in a direction to produce a clockwise torque on the lever, as the latter is viewed in FIG. 1. It is apparent, of course, that the actuator 74 responds to any fluctuations in the intake manifold vacuum, whereby the torque produced on the lever 72 by the actuator varies in response to such fluctuations. As will be explained presently, however, the flow restrictor 86 delays the response of the actuator to the fluctuations in the intake manifold vacuum for the purpose of providing a rich mixture to the engine 36 during acceleration.

If the vacuum in the engine intake manifold 34 drops suddenly to a level corresponding to the setting of the surge valve spring 112, the surge valve 88 opens. Opening of the surge valve provides unrestricted communication between the intake manifold 34 and the pressure actuator 74 in parallel with the flow restrictor 86. This results in instantaneous equalization of the vacuum level in the actuator with the vacuum level in the intake manifold. If the intake manifold vacuum level suddenly increases, the check valve 90 opens. Opening of the check valve also provides unrestricted communication between the intake manifold 34 and the actuator 74 in parallel with the flow restrictor 86, thereby effecting instantaneous equalization of the vacuum level in the actuator with the vacuum level in the intake manifold.

At the free end of the lever 72 is a fuel pressure regulating valve 120. This valve includes a spring-loaded valve member 122 having an externally projecting stem 124 which is pivotally connected to the free end of the lever. The valve spring (not shown) urges the valve member 122 upwardly in FIG. 1 and in a direction to close the valve. It is apparent, therefore, that the force exerted on the lever 72 by the pressure actuator 74 acts in opposition to the spring closing force in the pressure regulating valve 120 and in a direction to open the valve.

Also located at the free end of the lever 72 are two limit stops 126 and 128 for limiting pivotal movement of the lever in a direction to open the pressure regulating valve 120, i.e., in the clockwise direction in FIG. 1. Limit stop 126, which is hereinafter referred to as a fixed limit stop, comprises an adjustable stop screw threaded in a bracket on the housing 70 of the fuel pressure regulator 66. Limit stop 128, which is hereinafter referred to as a retractable limit stop, comprises a stop member 134 mounted on a bracket 136 on the housing 70 for movement between an extended position, shown in solid lines in FIG. 1*a*, and a retracted position, shown in phantom lines in that figure. Stop member 134 is engageable with an adjustable stop screw 138 on the lever 72. In the drawings, stop member 134 is shown to be an eccentric which is journaled in the bracket 136 for rotation between its extended and retracted positions. This eccentric is normally retained in its extended position by a spring (not shown) and is retracted by energizing of a rotary solenoid 140. The manner in which this solenoid is energized will be explained presently.

When the retractable stop 134 is extended, pivotal movement of the lever 72 in a direction to open the fuel pressure regulating valve 120 is limited by engagement of the lever screw 138 with the stop. The maximum opening of the fuel pressure regulating valve under these con-

ditions is adjustable by adjustment of the lever screw **138**. When the stop **134** is retracted, pivotal movement of the lever **72** in a direction to open the fuel pressure regulating valve is limited by engagement of the lever with the fixed limit stop **126**. The maximum opening of the fuel pressure regulating valve under these conditions is adjustable by adjustment of the fixed stop.

At this point, it is apparent that during steady state operation of the engine **36**, the rate of fuel injection into the mixing chamber **28** of the carburetor **20** is a combined function of the position of the fuel metering valve **58** in the fuel injection nozzle **24** and the pressure of the fuel delivered to the nozzle from the fuel supply **52**. The position of the fuel metering valve **58**, of course, is determined by the current setting of the throttle valve **38**. The pressure of the fuel supplied to the fuel injection nozzle **24**, on the other hand, is controlled by the fuel pressure regulator **66**. Thus, during steady state operation of the engine **36**, the pressure actuator **74** exerts on the lever **72** a force proportional to the vacuum in the engine intake manifold **34** and in a direction to open the fuel pressure regulating valve **120** against the action of the valve spring. The opening of the regulating valve under these conditions and, thereby, the pressure of the fuel supplied to the carburetor **20** are thus proportional to the intake manifold vacuum. Any gradual changes in the intake manifold vacuum, occasioned by changes in the loading on the engine **36**, for example, are reflected in corresponding changes in the force exerted on the lever **72** by the pressure actuator **74** and, thereby, in corresponding changes in the opening of the fuel pressure regulating valve **120** and the fuel pressure to the carburetor **20**. The carburetor **20** and the fuel-air ratio control system **22** are so designed as to yield a predetermined relationship between the rate of fuel injection and the manifold vacuum, which is a function of engine air demand, thereby to maintain the proper fuel-air ratio over the entire engine operating range.

As noted earlier, the carburetor **20** is identical to that of my copending application Ser. No. 345,881 and is designed to permit engine operation at a substantially more lean fuel-air ratio, over the entire engine operating range, than is possible with conventional carburetors. The same is true of the carburetor disclosed in my aforementioned copending application Ser. No. 424,970. FIG. 4, for example, illustrates the fuel-air ratio curves of the carburetor **20** and a standard carburetor. Operation of an internal combustion engine at such a lean fuel-air ratio, of course, is highly desirable from the standpoint of reducing the exhaust emission of unburned hydrocarbons.

Assume now that the engine **36** is accelerated by depression of the throttle pedal to rotate the throttle valve **38** to some position short of its full throttle position. This movement of the throttle valve is transmitted through the link **64** to the fuel metering valve **58** in the fuel injection nozzle **24**, thereby to effect a proportional increase in the rate of fuel injection, as required to maintain the proper fuel-air ratio. Opening of the throttle valve in this way causes a sudden decrease in the vacuum level within the engine intake manifold **34**. This reduction in the intake manifold vacuum is transmitted through the flow restrictor **86** to the pressure responsive actuator **74**, whereby the actuator responds to the decrease in the manifold vacuum. Neglecting for the moment the delaying action of the flow restrictor, the force exerted by the actuator on the lever **72** and, hence, the opening of the fuel pressure regulating valve **120** are reduced in proportion to the decrease in manifold vacuum. This results in a proportional decrease in the fuel pressure to the carburetor **20**. Thus, when the engine is accelerated, the fuel metering valve **58** in the fuel injection nozzle **24** is opened to increase the rate of fuel injection while the fuel pressure to the nozzle is initially diminished. Accordingly, at the instant of the acceleration command, the effective rate of fuel injection is less than that corresponding to the current setting of the throttle valve **38** under steady state engine operating conditions. This initial reduction in the fuel pressure to the carburetor nozzle is necessary, of course, because of the fact that at the instant of the acceleration command, the intake manifold vacuum drops to a level which is below the steady state vacuum level corresponding to the new position of the throttle valve. As the engine speed increases following the acceleration command, the intake manifold vacuum increases to its new steady state level, thereby resulting in a corresponding increase in the fuel pressure to the carburetor nozzle. The fuel pressure regulator **66** is designed to regulate the fuel pressure to the carburetor nozzle, in response to this increasing manifold vacuum, in such a way as to provide an optimum fuel-air ratio during acceleration. Eventually, the engine **36** again reaches steady state operation at the new throttle setting, at which time the fuel pressure to the carburetor will have risen to the level required to provide the proper fuel-air ratio at the current throttle valve position under steady state engine operating conditions.

Consider now the fact that changes in intake manifold vacuum occasioned by acceleration of the engine **36** are transmitted to the pressure responsive actuator **74** through the flow restrictor **86**. This flow restrictor, in effect, delays the response of the actuator to such manifold vacuum changes. Accordingly, during acceleration, the vacuum level in the actuator follows, in lagging relation, the manifold vacuum to its new steady state level. As a consequence, at the instant of the acceleration command, the force exerted on the lever **72** by the actuator and, thus, the fuel pressure to the carburetor **20** are slightly greater than necessary to provide the theoretically correct fuel-air ratio at the then existing level of intake manifold vacuum. It is apparent, therefore, that the delayed response of the pressure responsive actuator **74** to changes in intake manifold vacuum, occasioned by partial acceleration of the engine **36**, is effective to enrich the combustible mixture delivered to the engine immediately following the acceleration command. This enriched mixture increases the engine power available during acceleration and, thereby, optimizes the engine performance during acceleration.

Assume now a full throttle acceleration command during which the throttle valve **38** is rotated to its full throttle, or wide open, position. Under these conditions, the vacuum level in the engine intake manifold **34** suddenly drops almost to zero (atmospheric pressure) and the rate of induction air flow through the carburetor at the instant of the acceleration command is substantially less than that corresponding to the current full throttle position of the throttle valve under steady state engine operating conditions. If the pressure responsive actuator **74** had the same delayed response during full throttle acceleration, as it has during partial acceleration, the mixture delivered to the engine would become excessively rich at the low manifold vacuum level existing at the instant of and immediately following the full throttle acceleration command. This would cause a serious decrease in engine power. This decrease in engine power is avoided in the control system **22** by the provision of the surge valve **88**. As noted earlier, this surge valve is set to open when the intake manifold vacuum drops to a few inches of mercury (i.e., about 2 inches). Accordingly, during full throttle acceleration of the engine **36**, the surge valve **88** opens when the manifold vacuum suddenly drops to zero immediately following the acceleration command. Opening of this surge valve provides unrestricted communication between the intake manifold **34** and the pressure responsive actuator **74**, in parallel with the flow restrictor **86**. Immediately following the acceleration command, therefore, the vacuum level in the actuator is equalized with the vacuum level in the intake manifold. This results in an initial reduction in the pressure of the fuel delivered to the fuel injection nozzle **24**. As the engine

36 accelerates following the acceleration command, the vacuum level in the intake manifold increases. When the manifold vacuum increases to the setting of the surge valve 88, the latter valve recloses to restore the delayed response of the actuator 74 to the now increasing manifold vacuum. It is apparent, of course, that during both partial acceleration and full throttle acceleration, when the engine finally reaches its steady state operating condition, the vacuum level in the actuator 74 is again equalized with the vacuum level in the intake manifold to restore the fuel-air ratio to its proper value for the current engine speed.

Assume now that the throttle pedal is released to effect rotation of the throttle valve 38 toward its closed position and thereby decelerate the engine 36. Under these conditions, the vacuum level in the intake manifold 34 suddenly rises. If the pressure responsive actuator 74 continued to have the same delayed response to this increasing manifold vacuum as it has to decreasing manifold vacuum during acceleration, the vacuum level in the actuator would remain slightly less than the vacuum level in the intake manifold. In this case, the pressure actuator would not respond to a subsequent acceleration command until the intake manifold vacuum decreased to the vacuum level in the actuator. This delayed response of the actuator to a subsequent acceleration command, of course, would result in a delay in the response of the engine 36 to the acceleration command, which is highly undesirable.

Check valve 90 is provided to eliminate this delay in the response of the engine 36 to an acceleration command following a deceleration command. Thus, as just noted, when the throttle valve 38 is closed to decelerate the engine 36, the vacuum level in the intake manifold 34 rises, with the result that the absolute pressure in the pressure responsive actuator 74 exceeds the absolute pressure in the intake manifold. The check valve 90 is designed to open under these conditions and thereby provide unrestricted communication between the pressure actuator and the intake manifold. This unrestricted communication instantly equalizes the vacuum level in the actuator with the vacuum level in the intake manifold, thereby conditioning the actuator, and hence the engine 36, for instantaneous response to a subsequent acceleration command.

As noted earlier, if the vacuum level in the intake manifold 34 is less than about 15 inches of mercury, the rate of induction air flow through the carburetor 20 is a function of both the position of the throttle valve 38 and the manifold vacuum. Under these conditions, then, fluctuations in the intake manifold vacuum, at any given position of the throttle valve 38, are reflected in corresponding fluctuations in the rate of induction air flow through the carburetor. Accordingly, in order to maintain the proper fuel-air ratio, it is necessary to regulate the rate of fuel injection both in response to the setting of the throttle valve and in response to intake manifold vacuum. When the intake manifold vacuum equals or exceeds about 15 inches of mercury, on the other hand, the pressure drop across the throttle valve becomes critical. Under these conditions, fluctuations in the intake manifold vacuum, at any given setting of the throttle valve, are ineffective to cause changes in the induction air flow rate. Accordingly, the proper fuel-air ratio may be maintained solely by unified adjustment of the throttle valve 38 and the fuel metering valve 58 in the fuel injection nozzle 24. The fuel pressure to the nozzle may be maintained constant. To this end, the retractable limit stop 128 and the adjustable stop screw 138 on the lever 72 are adjusted to effect engagement of the lever stop screw 138 with the eccentric stop 134 when the latter is extended and the vacuum level in the intake manifold 34 rises to about 15 inches of mercury. It is obvious, of course, that this engagement of the lever screw 138 with the eccentric stop 134 limits opening of the fuel pressure regulating valve 120, and thereby prevents further increase in fuel pressure to the carburetor nozzle, in response to increasing manifold vacuum. The lever screw 138 is so adjusted that the fuel pressure to the carburetor nozzle at an intake manifold vacuum of about 15 inches is just sufficient to provide the proper fuel-air ratio at all settings of the throttle valve 38 and the nozzle fuel metering valve 58.

The fuel pressure regulator 66 incorporates two additional functions, to wit, regulation of the fuel pressure to the carburetor nozzle 24 in response to changes in atmospheric pressure and enrichment of the combustible mixture delivered to the engine 36 during cold engine starting, idling and running. With respect to the first of these functions, it is apparent that the density of the induction air entering the carburetor 20 varies inversely with altitude. Thus, as the altitude increases, the air density decreases and, conversely, as the altitude decreases, the air density increases. This change in air density, in turn, affects the operation of the engine. Assume, for example, a given steady state operating condition of the engine at two different altitudes, hereinafter referred to as a low altitude and a high altitude. The rate of induction air flow into the engine in terms of cubic feet per minute is the same at both altitudes, of course. However, since the density of the air at the high altitude is greater than the density of the air at the low altitude, the total effective volume of air to the engine, per given unit of time, is greater at the low altitude than at the high altitude. As a result, if the rate of fuel injection remains constant, the effective fuel-air ratio will be richer at the high altitude than at the low altitude. In order to maintain optimum engine performance at different altitudes, therefore, it is necessary to regulate the rate of fuel injection in response to atmospheric pressure. The same applies to engine operation at two different ambient temperatures.

To this end, the fuel pressure regulator 66 includes an evacuated bellows, or aneroid, 142. One end of the bellows is attached to the fuel pressure regulator housing 70. A tension spring 144 is connected between the opposite end of the bellows and the lever 72. It is apparent that increasing atmospheric pressure reacts on the bellows 142 in a direction to collapse the bellows and thereby transmit to the lever 72, through the spring 144, a force which is proportional to the atmospheric pressure. This force acts on the lever in a direction to open the fuel pressure regulating valve 120 and thereby increase the fuel pressure to the carburetor nozzle 24. A decrease in atmospheric pressure, of course, reduces the force exerted by the bellows on the lever 72 and thereby the fuel pressure to the carburetor. At this point, therefore, it is apparent that the fuel pressure regulator 66 is effective to regulate the fuel pressure to the carburetor nozzle both in response to the vacuum level in the intake manifold 34 and in response to atmospheric pressure. The bellows 142, spring 144, and point of connection of the spring to the lever 72 are selected to effect proper compensation of fuel pressure in response to atmospheric pressure.

During cold starting, idling and running of the engine 36, much of the fuel which is injected into the carburetor 20 is not immediately vaporized. Accordingly, in order to assure proper operation of the engine under these conditions, it is necessary to supply additional fuel to the engine in order to compensate for that fuel which is not vaporized. To this end, the retractable lever stop 134 is positioned by a rotary solenoid 140. The control system 22 comprises an energizing circuit 146 for the rotary solenoid 140, which circuit is effective to energize the solenoid, and thereby retract the eccentric stop 134, when the engine is started and idles cold. Energizing circuit 146 comprises a switch 148 which is electrically connected, through the ignition switch 150, to the rotary solenoid, in the manner illustrated in FIG. 1, whereby the solenoid is energized in response to closing of the solenoid switch 148 and the ignition switch 150. Referring to FIGS. 5 and 5a, it will be observed that the solenoid switch 148

is mounted on the carburetor housing **26** adjacent the automatic choke valve **152** of the carburetor. According to the invention, the automatic choke valve is provided with means **154** for closing the switch **148** in response to movement of the valve to the position it occupies when the engine is cold. At this point, therefore, it is apparent that the solenoid **140** is energized, to retract the eccentric stop **134**, when the engine **36** is cold and the ignition switch **150** is closed.

Retraction of the stop **134** permits pivotal movement of the lever **72** beyond its normal solid line limiting position of FIG. 1*a*, to its phantom line limiting position of engagement with the fixed stop **126**. This additional pivotal movement of the lever opens the fuel pressure regulating valve **120** slightly more than the maximum valve opening during normal engine operation with an intake manifold vacuum of about 15 inches of mercury or higher. Accordingly, the fuel pressure to the carburetor nozzle **24** and, thereby, the rate of fuel injection are slightly increased when the engine **36** is started and idles cold. This increased rate of fuel injection provides the engine with a rich mixture, as is necessary to assure easy starting and idling of the engine when cold. To assure proper performance of the engine **36** during cruising and full throttle operation of the engine **36** in its cold condition, the fuel pressure regulator **66** is provided with an additional pressure responsive actuator **156** similar to the actuator **74**. The flexible diaphragm **158** of the actuator **156** in connected to the lever **72** by a spring **160**. The actuator chamber **162** communicates, via a vacuum passage **164**, to the vacuum passage **84** at a point between the actuator **74** and the flow restrictor **86**. Within the vacuum passage **164** is a spring-loaded check valve **166** which opens when the vacuum level in the vacuum passage **84** exceeds the vacuum level in the actuator **156**. Mounted in the vacuum passage **164**, between the actuator **156** and the check valve **166**, is a solenoid valve **168** which is energized by closing of the switch **148** and the ignition switch **150**. When energized, the valve **168** communicates the actuator **156** to the vacuum passage **84**. When deenergized, the valve **168** closes the section of the vacuum line **164** leading to the vacuum line **84** and vents the actuator **156** to atmosphere. When thus vented, the actuator **156** exerts no appreciable force on the lever **72**.

At this point, it is apparent that when the engine **36** is started cold, the automatic choke valve **152** is closed and the rotary solenoid **140** and solenoid valve **168** are energized. Energizing of the solenoid **140** retracts the limit stop **134**, as already noted. Energizing of the valve **168** communicates the actuator **156** to the intake manifold **34** through the flow restrictor **86** and the vacuum passage **84**. The intake manifold vacuum is high at this time owing to the closed position of the automatic choke valve. Both the actuator **74** and the actuator **156** respond to this increased manifold vacuum and exert on the lever **72** a combined force proportional to the vacuum level and in a direction to open the fuel pressure regulating valve **120**. Thus, during cold engine running, the force acting on the fuel pressure regulating valve **120** in a direction to open the valve is increased due first to the increased manifold vacuum active in the actuator **74** and second to the additional force exerted by the actuator **156** on the lever **72**. In addition, the maximum opening of the fuel pressure regulating valve is increased during cold engine running because of the retraction of the eccentric stop **134**. This increase in the closing force active on the regulating valve and the increase in the maximum valve opening result in substantially increased fuel pressure to the carburetor nozzle **24** during cold engine running, as is necessary to attain optimum engine performance under these conditions. It is also apparent, of course, that since the actuator **156** communicates to the vacuum passage **84** upstream of the flow restrictor **86**, the response of both actuators **74** and **156** to the decrease in manifold vacuum occasioned by an acceleration command is delayed in such a way as to further enrich the mixture to the engine **36** during acceleration.

As the temperature of the engine **36** increases, the automatic choke valve **152** progressively opens, thereby reducing the component of intake manifold vacuum due tc the choke valve. This reduction in the manifold vacuum, in turn, reduces the valve opening force exerted on the lever **72** by each of the actuators **74** and **156**, whereby the fuel pressure to the carburetor **20** is reduced as the engine temperature increases. Eventually, the automatic choke valve opens sufficiently to permit re-opening of the switch **148**. When this occurs, the rotary solenoid **140** and the solenoid valve **168** are deenergized, thereby to effect return of the eccentric stop **134** to its normal extended position and vent the actuator **156** to atmosphere. The fuel pressure control system **22** then resumes its normal operation, as described earlier.

Within the section of the fuel line **50** between the fuel pressure regulating valve **120** and the carburetor **20** is a float chamber **170**. A vent line **172** extends from the upper end of this chamber to the inlet **30** of the carburetor **20**. Within the float chamber **170** is a float **174** mounting a valve **176** which is engageable with a valve seat **178** surrounding the adjacent end of the passage through the vent line **172**. The section of the fuel line **50** between the float chamber **170** and the carburetor **20** opens to the lower end of the vent chamber, as shown.

Float chamber **170** and the float **174** therein form a fuel vapor separator. Thus, under normal conditions, the fuel in the float chamber **170** retains the float valve **176** in contact with its valve seat **178**, thereby sealing off the vent line **172**. Any fuel vapor which develops in the fuel system accumulates in the upper end of the float chamber **170**. As the vapor continues to collect in the chamber, the vapor pressure eventually depresses the fuel level in the chamber sufficiently to unseat the float valve **176** from its valve seat **178**. The vapor is then vented from the chamber to the carburetor inlet **30**, thereby permitting the float valve **176** to reseat.

It is apparent that during operation of the engine **36** the interior of the float chamber **170** is under pressure. Accordingly, if the engine were stopped without closing the fuel line **50** between the float chamber and the carburetor, fuel would continue to be injected into the carburetor by the internal pressure within the float chamber. This, of course, would flood the engine and render difficult subsequent restarting of the engine. Accordingly, it is desirable, if not essential, to block fuel flow through the fuel line **50**, from the float chamber **170** to the carburetor **20**, when the engine is stopped. In addition, in order to minimize the exhaust emission of unburned hydrocarbons during deceleration, it is desirable to cut off fuel flow to the carburetor during deceleration. As noted earlier, the fuel cut-off device **68** performs these fuel cut-off functions.

The fuel cut-off device **68** comprises a solenoid valve **180** and an energizing circuit **182** therefor. Valve **180** connected in the fuel line **50** between the float chamber **170** and the carburetor **20**. The valve energizing circuit **182** includes two energizing channels **184** and **186** which are connected in electrical parallel between one terminal of the valve **180** and the ignition switch **150**. The other valve terminal is grounded. Starter switch **190** is serially connected in the energizing channel **184** and, for this reason, the channel is hereinafter referred to as the starting channel. The other energizing channel **186** is referred to as the running channel. Channels **184** and **186** share a common relay **192** including a coil **194**, a set of normally closed contacts **196** in the starting channel **184**, and a set of normally open contacts **198** in the running channel **186**. One terminal of the relay coil **194** is grounded. The other coil terminal is connected to the ungrounded terminal of the engine generator or alternator, not shown. Thus, the relay coil **194** is energized when the engine **36** is started. Relay **192** is constructed to energize and open its contacts **196** and close its contacts **198** when the ge

erator or alternator output reaches a predetermined level. Opening of contacts 196 interrupts the starting channel 184. Closure of contacts 198 completes the running channel 186, as explained below.

The running channel 186 includes, in addition to the common relay 192, a pair of relays 200 and 202. Relay 200 includes a coil 204 and a set of normally closed contacts 206. Relay 202 includes a coil 208 and a set of normally closed contacts 210. A resistor 212 is connected in shunt with the relay contacts 206. Relay contacts 198, 206 and 210 are arranged in series with the ignition switch 150. It is apparent, therefore, that the solenoid valve 180 is energized, and thereby opened, whenever the latter contacts and the ignition switch are simultaneously closed.

One terminal of the relay coil 208 is grounded. The other terminal of the latter coil is connected to the ignition switch 150 through three series connected switch contacts 214, 216 and 218. Switch contacts 214 are normally open and are operatively connected to the shift lever (not shown) in such a way that the contacts are closed when the lever is placed in drive position. Switch contacts 216 are normally closed and are mounted on an accelerator pedal, for example, in such a way that the pressure of the driver's foot against the pedal opens the contacts. Thus, the switch contacts 216 close when the driver relaxes the pressure of his foot on the accelerator pedal, thereby to decelerate, and the switch contact are re-opened when the driver re-applies foot pressure to the accelerator pedal. Switch contacts 218 close in response to acceleration of the engine 36 to one predetermined engine speed and re-open in response to deceleration of the engine to another lower predetermined speed.

For example, in actual practice, the switch contacts 218 may be set to close when the engine speed reaches 1200 r.p.m. and open when the engine speed drops to 900 r.p.m. This operation of the switch contacts 218 may be accomplished in various ways. In FIG. 3, for example, the switch 200 containing the switch contacts 218 is mounted on an open housing 222 attached to the front side of the engine radiator 224. Pivotally supported in this housing is a vane 226. A baffle 228 is mounted in front of the housing 222 in such manner as to define an air passage 230 therebetween. During operation of the engine 36, air flow occurs through the radiator 224 as a consequence of the forward motion of the vehicle and the rotation of the engine fan 232. A portion of this air flow occurs through the housing 222. The baffle 228 shields the housing against the air flow resulting from the forward motion of the vehicle, whereby the air flow through the housing is due substantially entirely to the rotation of the engine fan 232. The air flow through the housing produces on the vane 226 a pneumatic force which tends to swing the vane rearwardly against the opposing force of a spring 234. This spring normally retains the vane in its solid line forward position of FIG. 2. Switch 220 is operatively connected to the vane 226 for opening and closing of the switch contacts 218 in response to swinging of the vane. The vane, its spring 234, and the switch 220 are so arranged that the vane swings rearwardly to close the switch contacts 218 when the engine reaches a predetermined speed, such as the 1200 r.p.m. speed mentioned above. For reason to appear presently, it is desirable for the switch 220 to reopen at a lower engine speed than that at which the switch initially closes. To this end, a permanent magnet 236 is mounted on the vane 226, and an adjustable screw 238 is mounted on the housing 222 in a position wherein the screw is located within the magnetic field of the magnet when the vane 226 occupies its rear, phantom line position of FIG. 2, wherein it closes the switch 220. Thus, when the vane swings rearwardly to its phantom line position of FIG. 2 under the force of air flow through the housing 222 occasioned by rotation of the engine fan 232, an additional force is imposed on the vane which impedes its return to its normal forward position under the action of the vane spring 234. This force, of course, is created by the magnetic attraction between the magnet 236 and the screw 238 and may be regulated by adjusting the screw. As a result, the air flow through the housing 222 must drop below that necessary to initially swing the vane rearwardly to its phantom line position before the vane is permitted to return to its forward position under the action of the vane spring 234. This, in turn, requires the engine speed to drop below that necessary to initially swing the vane rearwardly to its phantom line position. According to the preferred practice of the invention, for example, the screw 238 is adjusted to effect return of the vane 226 to its forward position, and there-re-opening of the switch contacts 218, when the engine speed drops to approximately 900 r.p.m. Under the conditions discussed above, therefore, the switch contacts 218 close in response to acceleration of the engine to a speed of at least 1200 r.p.m. and re-open in response to deceleration of the engine to a speed of approximately 900 r.p.m.

It will be recalled that the relay 192 is energized to open its contacts 196 and close its contacts 198 in response to starting of the engine 36. The ignition switch 150 is closed at this time, of course. Assuming that the relay 192 is de-energized, therefore, it is apparent that energizing of the relay 192 interrupts the starting channel 184 of the fuel cut-off device 68, through which the fuel cut-off valve 180 is currently being energized, and immediately re-energizes the valve through the running channel 186 to retain open the solenoid valve 180. Subsequent simultaneous closure of the switch contacts 214, 216 and 218 energizes the relay 202 and thereby interrupts the running channel 186. This condition results in re-closing of the valve 180 to cut off fuel flow to the engine 36. Such condition occurs, to close valve 180, when the engine speed (after having first reached at least 1,200 r.p.m.) exceeds 900 r.p.m., with the shift lever in drive position and the driver releases the accelerator pedal to decelerate. The valve remains closed until the driver again exerts pressure on the throttle pedal to accelerate, or the engine speed drops below 900 r.p.m., or the shift lever is moved from its drive position.

It is thus apparent that the fuel cut-off device 68 is effective to cut off fuel flow to the engine 36 during deceleration and until the engine speed drops below 900 r.p.m. Fuel flow to the engine is then automatically restored. Exhaust emission of unburned hydrocarbons during deceleration is thus materially reduced.

The fuel cut-off device 68 illustrated is so arranged that the fuel cut-off valve 180 is opened by energizing of the valve. It is possible that the current flow through the valve over a period of time may heat the valve sufficiently to vaporize the fuel flowing through the valve to the engine 36. The relay 200 is provided to avoid this possibility. Relay 200 comprises a time delay relay in which one terminal of the coil 204 is grounded and the other terminal of the coil is connected to the electrical lead extending between the relay contacts 198 and 206. Thus, the relay coil 204 is energized immediately upon energizing of the relay 192 in response to starting of the engine 36, in the manner explained above. The time delay built into the relay 200, however, delays opening of the relay contacts 206, in response to energizing of the coil 204, sufficiently long to permit the fuel cut-off valve 180 to open. When the relay contacts 206 subsequently open, the fuel cut-off valve continues to be energized through the shunt resistor 212. This resistor is selected to limit current flow through the valve, and, therefore, heating of the valve, sufficiently to prevent vaporizing of the fuel flowing through the valve. It is apparent, of course, that initial energizing of the fuel cut-off valve 180 through the time delay relay contacts 206 is necessary to provide the relatively large force which is required to open the valve from its fully closed position. The force required to maintain the valve in its open position, however, is substantially less than this opening force and permits

continued energizing of the valve, after the latter is once opened, solely through the shunt resistor **212**.

It is well known in the art that proper ignition spark timing is essential to optimum engine performance. It is also well known, however, that retarding the spark reduces hydrocarbon emission and, unfortunately, engine power. This invention proposes to utilize spark retardation for reducing hydrocarbon emission without seriously effecting engine performance or power. To this end, the spark retarding mechanism **69** comprises an arm **240** which is mounted on the rotatable body **242** of the engine distributor **244**. Mounted on the body of the engine **36** is a fluid pressure actuator **246** including a housing **248** containing a flexible diaphragm **250**. This diaphragm is attached to the distributor arm **240** by a link **252**. A compression spring **254** acts between the arm **240** and the actuator housing **248** in a manner to urge the distributor body **242** in the counterclockwise direction, as viewed in FIG. 1. The chamber **256** in the actuator **246** communicates to the engine intake manifold **34** through a vacuum line **258**. Mounted in this vacuum line is a normally closed solenoid valve **260**. One terminal of valve **260** is grounded. The other valve terminal is connected to the ignition switch **150** through a normally open switch **262**. Switch **262** is mounted on the carburetor **20** in a position wherein the switch is closed by the throttle arm **40** at all settings of the throttle valve **38** in the range between idling and, say, 30 miles per hour. Opening of the solenoid valve **260** in response to closing of the switch **262** by the throttle arm **40** communicates the actuator chamber **256** to the vacuum level existing in the engine intake manifold **34**. Under these conditions, the actuator exerts a thrust or torque on the distributor body **242** in the clockwise direction, as viewed in FIG. 1, and thereby rotates the distributor body in a direction to retard the engine spark. The solenoid valve **260**, when closed in response to opening of the throttle valve **38** beyond its 30 mile-per-hour setting, vents the actuator **246** to atmospheric pressure. The distributor body **242** is then rotated back by the spring **254** to its normal optimal spark setting as determined by the normal distributor vacuum actuator **261**. It is apparent, therefore, that the actuator **246** and valve **260** are effective to retard the engine spark and thereby minimize hydrocarbon emission in the engine exhaust, but only in the range of engine operation between idling and 30 miles per hour. In this range, the loss of engine power occasioned by retarding of the spark is not serious.

The operation of the invention will now be summarized. When the engine **36** is started, the ignition switch **150** and starter switch **190** are closed. Closing of the starter switch energizes, and thereby opens, the fuel cut-off valve **180** to permit fuel flow to the engine during starting. When the engine starts, the relay **192** of the fuel cut-off device **68** energizes. The valve energizing function of the fuel cut-off device **68** is then transferred from the starting channel **184** to the running channel **186**. If the engine is started cold, the automatic choke valve **152** is closed. Closing of the ignition switch **150** under these conditions energizes the rotary solenoid **140** and solenoid valve **168** of the fuel pressure regulator **66**, thereby to retract the regulator stop **134** and communicate the cold engine running actuator **156** to the engine intake manifold **34**. A rich combustible mixture is thereby delivered to the engine **36** during cold engine starting and running conditions. The automatic choke valve **152** re-opens as the engine heats up so that eventually the rotary solenoid **140** and solenoid valve **168** are de-energized to restore the normal fuel-air ratio.

When the throttle valve **38** is opened to accelerate, the response of the main actuator **74** in the fuel pressure regulator **66** to the sudden drop in intake manifold vacuum (as well as the response of the cold running actuator **156**, if the engine has not yet reached its normal operating temperature) is delayed by the flow restrictor **86**. Under these conditions, a rich mixture is delivered to the engine during acceleration, thereby to increase the engine power available for acceleration. During full throttle acceleration, the surge valve **88** opens to momentarily bypass the flow restrictor **86** and thereby eliminate the delayed response of the fuel pressure regulator. This prevents the engine from receiving an over-rich mixture and thereby losing power immediately following the acceleration command. The surge valve closes when the manifold vacuum rises following the acceleration command, thereby to restore the normal delayed response of the fuel pressure regulator and, accordingly, the rich mixture to the engine. During deceleration, the check valve **90** opens to vent the actuator **74** directly to the engine intake manifold **34**. This conditions the actuator **74** for immediate response to a subsequent acceleration command. Also, fuel flow to the engine **36** is cut off during deceleration in response to opening of the switch contacts **216** and **218** in the fuel cut-off device **68**. In the range of throttle settings between idling and 30 miles per hour, the engine spark is retarded by the actuator **246** to reduce hydrocarbon emission without serious effect to engine performance.

It is evident that in the fuel-air ratio control system just described, the signal which operates or controls the fuel pressure regulator **66** in response to engine air demand is the engine intake manifold vacuum. This method of operating or controlling the fuel pressure regulator, while satisfactory for many applications, has certain inherent deficiencies. Thus, referring to FIG. 6 which illustrates the required relationship between fuel pressure and engine intake manifold vacuum necessary to yield an optimum fuel-air ratio in a typical control system according to the invention over the entire engine operating range, it will be observed that the fuel pressure to the carburetor nozzle increases quite rapidly, at first, as the manifold vacuum rises from its minimum value, corresponding to full throttle acceleration, and then progressively levels off as the manifold vacuum approaches its minimum value, corresponding to idling. It is evident from the illustrated curve that in the range of manifold vacuums between the minimum, which is normally about .05 inch of mercury, and 5 inches, which corresponds to the manifold vacuum range existing immediately after a full throttle acceleration command, the fuel pressure is required to change greatly with a relatively small change in manifold vacuum. In the control system just described, then, even a relatively small change in the manifold vacuum control signal to the pressure regulator **66** is required to produce a relatively large change in the fuel pressure to the carburetor nozzle **24**. As a consequence, the sensitivity of the control system to changes in manifold vacuum and the pressure regulating accuracy of the control system are extremely critical, with the result that precise regulation of the fuel pressure in the engine operating range under discussion requires a relatively high degree of precision in the manufacture of the control system. However, the sensitivity and regulating accuracy obtained by standard manufacturing techniques involving normal manufacturing accuracy yield a sufficiently sensitive and accurate response in the control system for many applications.

The modified fuel-air ratio control system of FIG. 7 is designed to avoid this deficiency of the earlier described control system. The control system of FIG. 7 also embodies a superior mechanism for reducing exhaust emission of unburned hydrocarbons during deceleration and certain other refinements, which will appear as the description proceeds.

In FIG. 7, reference numeral **300** designates a fuel injection carburetor identical to that illustrated in FIG. 1, and reference numeral **302** designates the modified fuel-air ratio control system. Control system **302** includes a fuel pressure regulator **304**, a fuel cut-off device **306**, and a combined throttle cracking and spark retarding

mechanism 308. The fuel pressure regulator 304, like the earlier fuel pressure regulator, comprises a transducer which effectively responds to certain variables related to engine operation, including engine air demand, engine temperature, and atmospheric pressure, and generates an integrated output signal which regulates the fuel pressure to the carburetor nozzle 310 in accordance with a combined function of these variables. More specifically, the fuel pressure regulator comprises a force balance system in which forces proportional to these variables are balanced against a resisting spring force to position a fuel pressure metering valve. To this end, the fuel pressure regulator, or transducer, 304 comprises a housing 312 on which is pivoted one end of a lever 314. Adjacent the lever is a pressure responsive actuator 316 including a chamber 318 in the transducer housing. This chamber contains a flexible diaphragm 320. Diaphragm 320 is peripherally sealed to the housing to define at one side of the diaphragm a hermetic chamber 322. Attached at one end to the center of the diaphragm is a tension spring 324, the opposite end of which is attached to the lever 314 at a position between the ends of the lever. Disposed within the actuator chamber 318 is a spring 326. For reasons which will appear presently, this spring is a non-linear spring. Actuator chamber 318 communicates, through a vacuum line 328, to the throat of a venturi 330 located in the induction air inlet passage 332 to the carburetor 300, immediately downstream of the carburetor choke valve 334. It is evident at this point that during operation of the carburetor 300, the induction air entering the carburetor through its inlet 332 creates a suppression in the throat of the venturi 330 which is related to the induction air flow rate. Moreover, since the throat of the venturi 330 is located downstream of the choke valve 334 and communicates to the intake manifold 336 of the engine 338 on which the carburetor is mounted, movement of the choke valve to its closed position creates, in the throat of the venturi, an additional suppression related to the position of the choke valve. This choke valve position, in turn, is related to engine temperature. Accordingly, the total or effective suppression existing in the throat of the venturi 330 during operation of the carburetor 300 is a combined function of the induction air flow rate through the carburetor and engine temperature. This total suppression is transmitted to the actuator chamber 318 through the vacuum line 328 and is effective to produce an unbalanced force on the diaphragm 320, which force is opposed by the force of the non-linear spring 326. The resultant, or net, force on the diaphragm is transmitted to the lever 314 through the actuator spring 324. Accordingly, the actuator 316 is effective to produce on the lever 314 a resultant force which is a combined function of induction air flow rate, engine temperature, and the currently active rate of the non-linear spring 326.

At the free end of the lever 314 is a fuel pressure regulating valve 340. This valve includes a spring-loaded valve member having an externally projecting stem 342 which is pivotally attached to the free end of the lever 314. The valve spring (not shown) urges the valve stem 342 upwardly in FIG. 7 and in a direction to close the valve. It is apparent, therefore, that the force exerted on the lever 314 by the pressure responsive actuator 316 acts in opposition to the spring closing force in the pressure regulating valve 340 and in a direction to open the valve.

Mounted within the transducer housing 312, over the free end of the lever 314, are a pair of evacuated bellows, or aneroids, 344. The lower ends of these bellows are secured to the housing 312. Extending between and secured to the upper ends of the bellows 344 is a cross-member 346, on the underside of which is mounted an adjustable limit stop 348. This limit stop is engageable with the free end of the lever 314 to limit pivotal movement of the lever in a direction to effect re-closing of the fuel pressure regulating valve 340 under the action of the valve spring. It is evident that the limit stop 348 is positioned in response to atmospheric pressure on the bellows 344. Thus, increasing atmospheric pressure compresses the bellows and thereby moves the limit stop 348 toward the lever 314. Decreasing atmospheric pressure, on the other hand, permits the bellows to expand, thereby moving the limit stop away from the lever. As will appear presently, the limit stop positions the fuel pressure control lever 314 for proper idling at all altitudes.

The inlet port of the fuel pressure regulating valve 340 communicates, through a fuel line 350, to a source of fuel under pressure. As in the previous form of the invention, in the case of a gasoline powered engine, this fuel source may comprise a fuel tank and a fuel pump for delivering fuel under pressure from the tank. In the case of an engine powered by liquid petroleum gas, the fuel source may comprise a fuel tank containing the liquid petroleum fuel under pressure. The outlet port of the fuel pressure regulating valve 340 communicates, through a fuel line 354, to the fuel inlet of the carburetor fuel injection nozzle 310. For reasons which will be explained presently, fuel line 354 has an enlargement 356 containing an orifice 358. Nozzle 310 has a fuel metering valve 360 which is connected, by linkage 362, to the carburetor throttle valve 364. The atomizing gas passage in the nozzle is connected to a source 366 of pressurized atomizing gas. As in the first embodiment of the invention, if the engine 338 on which the carburetor is mounted is a gasoline powered engine, this atomizing gas may comprise air which is raised to the required atomizing pressure by a pump. In the event the engine is powered by liquid petroleum fuel, the atomizing gas may comprise fuel vapor which is generated by passing the fuel through a heat exchanger.

As noted earlier, the carburetor 300 is identical to the carburetor 20 described earlier, except in one respect. The one difference between the two carburetors resides in the fact that in the earlier carburetor, the fuel metering valve in the carburetor nozzle is effective to meter or regulate fuel flow through the nozzle throughout the range of adjustment of this valve. The fuel metering valve 360 in the fuel injection nozzle 310 of carburetor 300, on the other hand, is effective to meter or regulate fuel flow through the nozzle for only a portion of the total range of adjustment of the valve. The reason for this will be explained presently. Suffice it to say at this point that the fuel metering valve 360 and the fuel metering orifice 368 in the nozzle 310 are so designed that the valve meters or regulates fuel flow only in the range of adjustment between its minimum flow or idling position and a preselected intermediate position of adjustment. In the ensuing description, this range of the nozzle metering valve is referred to as its effective range. Adjustment of the fuel metering valve 360 beyond this effective range, in response to opening of the carburetor throttle valve 364, retracts the metering valve 360 out of flow metering relation to the fuel orifice 368. The rate of fuel flow through the orifice is then governed solely by the size of the orifice and the pressure of the fuel delivered to the fuel injection nozzle 310.

At this point, it is evident that during operation of the engine 338 at its normal operating temperature under conditions such that the fuel metering valve 360 in the carburetor nozzle 310 is within its effective range of adjustment, the rate of fuel injection into the carburetor mixing chamber 370 is a combined function of the current setting of the fuel metering valve and the fuel pressure to the nozzle. The current setting of the fuel metering valve 360, in turn, is determined by the current setting of the carburetor throttle valve 364. On the other hand, the fuel pressure to the carburetor is related to the resultant force exerted on the fuel pressure control lever 314 by the pneumatic actuator 316. This resultant force is a

function of the net force exerted by the actuator spring **324**, **326** and the total suppression existing in the throat of the carburetor inlet venturi **330**. Since it has been assumed that the engine has attained its normal operating temperature, the automatic choke valve **334** is full open, whereby the total suppression in the inlet venturi throat is a sole function of the induction air flow rate through the carburetor. Under the conditions stated, then, the rate of fuel injection into the carburetor mixing chamber **370** is a combined function of the throttle valve setting and induction air flow rate. Opening of the throttle valve **364** effects retraction of the fuel metering valve **360** away from the nozzle fuel orifice **368** to increase the rate of fuel injection. Closing of the throttle valve effects movement of the fuel metering valve toward the fuel orifice to reduce the rate of fuel injection. Similarly, an increase in the rate of induction air flow through the carburetor increases the fuel pressure to the carburetor nozzle **310** and hence the rate of fuel injection into the carburetor mixing chamber **370**. A reduction in the rate of induction air flow reduces the fuel pressure through the nozzle and hence the rate of fuel injection. Assume now that the carburetor throttle valve **364** is opened to a position wherein the fuel metering valve **360** is retracted beyond its effective range of adjustment. Under these conditions, the rate of fuel injection into the carburetor mixing chamber **370** is determined solely by the size of the fuel orifice **368** in the carburetor nozzle **310** and the fuel pressure to the nozzle. Accordingly, the rate of fuel injection is varied solely in response to changes in the induction air flow rate through the carburetor. The transducer **304** and the fuel injection nozzle **310** are so designed that the rate of fuel injection under the engine operating conditions stated yields an optimum fuel-air ratio over the entire engine operating range.

Up to this point, it has been assumed that the engine **338** has reached its normal operating temperature and, therefore, that the automatic choke valve **334** is full open. Assume now that the engine is cold, such that the automatic choke valve is closed, or at least partially closed. Under these conditions, the total suppression existing in the throat of the carburetor inlet venturi **330** is a combined function of the induction air flow rate through the carburetor and engine temperature. Thus, it is evident that closing of the automatic choke valve **334** increases the total suppression within the inlet venturi and hence the fuel pressure to the carburetor nozzle **310** and the rate of fuel injection into the carburetor mixing chamber **370**. Closing of the automatic choke valve, therefore, enriches the combustible mixture delivered to the engine **338** in accordance with a function of engine temperature. This enrichment, of course, occurs at all induction air flow rates and at all settings of the fuel metering valve **360** in the carburetor nozzle. Progressive opening of the automatic choke valve **334** as the engine approaches its normal operating temperature progressively reduces the fuel pressure to the carburetor nozzle and, therefore, progressively leans the combustible mixture delivered to the engine until the choke valve finally reaches its full open position. The present fuel-air ratio control system is designed to thus initially enrich and progressively lean the combustible mixture to the engine in such a way as to provide the optimum fuel-air ratio at all engine temperatures.

It is obvious that if the fuel-air ratio produced by the fuel-air ratio control system **302** is to conform closely to the ideal or optimum fuel-air ratio over the entire operating range of the engine **338**, the fuel pressure to the fuel injection nozzle **310** must vary approximately in accordance with an ideal or optimum function of induction air flow rate through the carburetor **300**. The non-linear spring **326** in the pneumatic actuator **316** and the enlargement **356** and orifice **358** in the fuel line **354** are provided to achieve this required relation between fuel pressure and induction air flow rate. Thus, let us assume, for the moment, that the actuator spring **326** is a linear spring and that the enlargement **356** and orifice **358** are not present in the fuel line **354**. Under these conditions, the fuel pressure to the fuel injection nozzle **310** will vary approximately linearly with the suppression in the carburetor inlet venturi **330**. This venturi suppression, on the other hand, varies non-linearly with, and approximately in accordance with a quadratic function of, induction air flow rate through the venturi. Thus, the rate of increase of the inlet venturi suppression occasioned by increasing induction air flow through the inlet venturi is initially relatively small as the induction air flow rate initially increases from zero and then increases sharply as the induction air flow rate increases until, at relatively high induction air flow rates, the inlet venturi suppression varies substantially linearly with flow rate. Stated another way, the increase in induction air flow rate through the inlet venturi corresponding to a given increase in inlet venturi suppression is initially relatively large as the venturi suppression rises from zero and then becomes progressively smaller as the flow rate increases. Accordingly, if the spring **326** in the pneumatic actuator **316** were a linear spring, having a constant spring rate, the relation between the fuel pressure to the fuel injection nozzle **310**, which pressure would then vary linearly with inlet venturi suppression, and induction air flow rate through the carburetor would deviate substantially from the ideal or optimum fuel pressure-flow rate relationship necessary to yield an optimum fuel-air ratio over the entire operating range of the engine **338**, particularly at low induction air flow rates. Moreover, in the absence of the fuel line enlargement **356** and orifice **358**, fuel flow through the fuel line **354** would be laminar, thus resulting in further deviation between the actual and optimum fuel pressure-flow rate relationship.

This deviation is virtually eliminated, or at least reduced to an absolute minimum, by employing a non-linear spring in the pneumatic actuator **316** and incorporating the enlargement **356** and orifice **358** in the fuel line **354**. Thus, the actuator spring **326** is selected to have a non-linear spring rate which varies with deflection of the spring approximately in accordance with the same function as the suppression in the carburetor inlet venturi **330** varies with induction flow rate through the carburetor. As a consequence, as the suppression in the inlet venturi **330** rises from zero, in response to increasing induction air flow rate through the carburetor, the increase in the resultant force produced on the fuel control lever **314**, and the resulting increase in the fuel pressure to the fuel injection nozzle **310**, occasioned by a given increase in inlet venturi suppression, will be initially relatively large as the inlet venturi suppression initially rises from zero. Continued deflection or compression of the non-linear actuator spring **326** in response to the increasing inlet venturi suppression effects a non-linear increase in the force exerted on the actuator diaphragm **320** by the spring in opposition to the suppression induced penumatic force on the diaphragm. This, in turn, results in a progressive reduction in the rate of increase of the resulting force produced on the fuel control lever **314**, and hence in the rate of increase of the fuel pressure to the fuel injection nozzle **310**, in response to increasing inlet venturi suppression. The fuel line enlargement **356** and orifice **358** are dimensioned to induce into the fuel flowing through the fuel line **354** sufficient turbulence to provide the feul line with an effective Reynolds number approximately equal to the Reynolds number of the carburetor inlet venturi **330**. It is now evident, therefore, that the fuel pressure control system **302** may be designed to produce an optimum fuel-air ratio over the entire operating range of the engine **338**.

Limit stop **348** positions the fuel pressure control lever **314** during idling. As explained earlier, this stop is positioned in response to the atmospheric pressure active on the bellows **344**. According to the present invention, the response of the bellows to atmospheric pressure is such that the limit stop **348** is automatically positioned for

optimum idling of the engine at all altitudes. Thus, increasing atmospheric pressure on the bellows **344**, occasioned by decreasing operating altitude of the engine **338**, effects movement of the limit stop **348** toward the fuel control lever **314**, thereby increasing the fuel pressure to the fuel injection nozzle **310** in the minimum fuel pressure or idling position of the lever, as required to maintain an optimum fuel-air ratio for idling during increasing induction air density occasioned by decreasing engine operating altitude. Decreasing atmospheric pressure on the bellows **344** has the reverse effect of reducing the feul pressure to the fuel injection nozzle **310** in the minimum fuel pressure or idling position of the fuel pressure control lever **314**, as required to maintain an optimum fuel-air ratio for idling during decreasing induction air density occasioned by increasing engine operating altitude.

The fuel-air ratio control system **302** is equipped with a third bellows **372** for rendering the system responsive to atmospheric pressure, and hence engine operating altitude, under normal running conditions of the engine **338**. Bellows **372** is attached at one end to the transducer housing **312**. The opposite end of the bellows is operatively connected, by a tension spring **374**, to the fuel pressure control lever **314** in such a way that atmospheric pressure on the bellows produces a force on the lever in a direction to open the fuel pressure regulating valve **340** against the action of the valve spring and thereby increase the fuel pressure to the fuel injection nozzle **310**. Accordingly, bellows **372**, like the bellows in the first embodiment of the invention, is effective to regulate the fuel pressure to the nozzle **310** in response to changes in atmospheric pressure and, thereby, to automatically maintain an optimum fuel-air ratio at all operating altitudes of the engine **338**.

As explained earlier, in connection with the first embodiment of the invention, it is desirable, during acceleration, to momentarily enrich the combustible mixture delivered to the engine, thereby to provide the engine with maximum power during acceleration. The fuel-air ratio control system **302** under discussion is equipped with a pneumatic actuator **376** for this purpose. Actuator **376** comprises a flexible diaphragm **378** which is peripherally sealed to the wall of a chamber **380** within the transducer housing **312**, thereby to define, at one side of the diaphragm, a hermetic chamber **382**. Chamber **382** communicates to the engine intake manifold **336** through a vacuum line **384**. The center of the diaphragm **378** is connected to the fuel pressure control lever **314** by a tension spring **386**. It is evident from the drawings that the vacuum existing in the intake manifold **336** is effective to produce on the diaphragm **378** an unbalanced pneumatic force related to the manifold vacuum. This force acts on the fuel pressure control lever **314**, through the spring **386**, in a direction to close the fuel pressure regulating valve **340** and thereby reduce the fuel pressure to the fuel injection nozzle **310**.

It is now evident, therefore, that during steady state cruising conditions of the engine **338**, the relatively high vacuum existing in the intake manifold **336** of the engine is effective to produce on the fuel pressure control lever **314**, through the pneumatic actuator **376**, a force which aids the force produced on the lever by the spring in the fuel pressure regulating valve **340** and opposes the forces produced on the lever by the induction air flow rate responsive actuator **316** and the altitude responsive bellows **372**. The position of the lever **314**, and hence the fuel pressure to the fuel injection nozzle **310**, is determined by the relative magnitudes of these forces. The control system **302** is so designed that during normal state cruising conditions of the engine **338**, these several forces position the lever **314** in such a way as to yield an optimum fuel-air ratio at each steady state operating condition, over the entire operating range of the engine. Assume now that the throttle valve **364** is suddenly opened to accelerate. Under these conditions, the vacuum level in the intake manifold **336** suddenly drops. When this occurs, the force exerted on the lever **314** by the pneumatic actuator **376** is reduced and the fuel pressure to the fuel injection nozzle **310** is correspondingly increased to enrich the combustible mixture delivered to the engine **338**. Thus, the fuel-air ratio control system **302** is effective to automatically enrich the combustible mixture delivered to the engine during acceleration, as required for maximum engine power, and optimum engine performance, during acceleration.

When the throttle valve **364** is closed to decelerate the vacuum level in the intake manifold **336** rises. When this occurs, the force exerted on the fuel pressure control lever **314** by the pneumatic actuator **376** is increased and the fuel pressure to the nozzle **310** is correspondingly reduced to lean the combustible mixture delivered to the engine. This aids in reducing exhaust emission of unburned hydrocarbons during deceleration. The combined throttle cracking and spark retarding mechanism **308** is effective to further reduce exhaust emission of unburned hydrocarbons during deceleration.

Mechanism **308** comprises a throttle cracker **388** including a throttle cracking arm **390** which is fixed to one end of the throttle valve shaft **392**. Rotation of the arm **390** in the clockwise direction in FIG. 7 rotates the throttle valve **364** toward its open position. Fixed to the outer end of the throttle cracking arm is a switch **394** having an actuator **396**. Mounted on the engine **338** adjacent the outer end of the arm **390** is a bracket **396**. A screw **398** is threaded in the bracket **396** and has one end located adjacent the switch **394** on the outer end of the throttle cracking arm **390**. Fixed at one end to the opposite end of the screw **398** is a flexible drive shaft **400**. The opposite end of this shaft is fixed to one end of a shaft **402** which is rotatably supported by a housing **404**. Rigidly mounted on the other end of the shaft **402** is a fan blade **406** disposed within the housing **404**. The fan blade housing **404** is mounted on the engine **338** directly behind the engine cooling fan **408**. It is evident at this point, therefore, that the air flow created by rotation of the engine fan **408** during operation of the engine **338** is effective to drive the fan **406**, and thereby the screw **398**, in one direction. Screw **398** is threaded in such a way that rotation thereof in said one direction advances the screw toward the switch **394** on the outer end of the throttle cracking arm **390**.

Fan shaft **402** is surrounded by a housing **410** which is fixed to the fan hosuing **404** by struts **412**. Housing **410** encloses a spiral spring **414**, one end of which is fixed to the fan shaft **402** and the other end of which is fixed to the housing **410**. Spring **414** is wound in a direction to oppose rotation of the fan **406** and the screw **398** under the force of the air flow from the engine fan **408**.

It is now evident, therefore, that during operation of the engine **338**, the air flow from the engine fan **408** rotates the fan **406** in a direction to wind up or tension the fan spring **414**. Rotation of the fan **406** through the action of the air flow from the engine **408** continues until the fan spring **414** has been wound up or tensioned sufficiently to produce on the fan shaft **402** a torque equal and opposite to the torque produced on the fan **406** by the air flow from the engine fan **408**. Accordingly, when the engine speed is constant, the fan **406** remains relatively stationary. If the engine speed is reduced to a lower constant speed, the fan spring **414** drives the fan **406**, and thereby the screw **398**, in rotation against the action of the air flow from the engine fan **408** until a new torque balance is created at the lower engine speed. Rotation of the screw **398** in this direction retracts the screw axially away from the throttle cracking arm **390**. Similarly, if the engine speed is increased to a higher constant speed, the air flow from the engine fan **408** drives the fan **406**, and thereby the screw **398**, in a direction to wind up the fan spring **414** until a new torque

balance is created at the higher engine speed. Rotation of the screw **398** in the latter direction advances the screw axially toward the throttle cracking arm **390**. It is evident, therefore, that the axial position of the screw **398** relative to the throttle cracking arm **390** is related to engine speed.

According to the present invention, the throttle cracker **388** described above is so constructed and arranged that when the carburetor throttle valve **364** is fully closed and the engine **338** is operating at a predetermined engine speed, the end of the screw **398** just engages the actuator **396** of the switch **394** on the outer end of the throttle cracking arm **390**. In a typical fuel-air ratio control system according to the invention, this predetermined engine speed is on the order of 1,000 r.p.m. In the ensuing description, the axial position occupied by the screw **398** at this engine speed is referred to as its low speed effective position. Under the conditions stated above, the switch **394** is open. Assume now that the throttle valve **364** remains in its closed position and that the screw **398** is rotated in a direction to advance the screw beyond its low speed effective position and toward the throttle cracking arm **390**. During this advancement of the screw, the latter initially depresses the switch actuator **396** against the action of the actuator spring (not shown) to close the switch **394** and thereafter drives the throttle cracking arm in a direction to rotate the throttle valve **364** toward its open position.

At normal cruising speeds of the engine **338**, the throttle valve **364** is open and the throttle cracking arm **390** is retracted away from the screw **398**. The screw, in turn, is axially positioned in accordance with the engine speed. Assume now that the engine cruising speed exceeds the aforementioned predetermined engine speed at which the screw occupies its low speed effective position. Assume further that the throttle pedal is released to decelerate. Under these conditions, at the instant of the deceleration command, the screw **398** is advanced a distance beyond its low speed effective position and toward the throttle cracking arm **390**. Accordingly, when the throttle pedal is released, the throttle cracking arm is rotated by the accelerator spring (not shown) in the counterclockwise direction in FIG. 7 through a position wherein the switch actuator **396** engages and is depressed by the screw **398** to close the switch **394** to a position wherein the switch bottoms against the screw to limit further counterclockwise rotation of the throttle cracking arm. At this time, therefore, the throttle valve **364** is retained open, i.e., the throttle valve is "cracked," by the screw. This permits sufficient air flow to the engine cylinders to effectively reduce exhaust emission of unburned hydrocarbons during deceleration. The reduction in engine speed occasioned by the deceleration command permits the fan spring **414** to rotate the screw **398** in a direction to retract the screw away from the throttle cracking arm **390**, thereby effecting progressive closure of the throttle valve **364** during deceleration. Thus, the induction air flow to the engine cylinders is progressively reduced during deceleration as the need for such air flow diminishes due to the reduction in engine speed. Assuming continued deceleration of the engine, the screw **398** is eventually retracted to and beyond its low speed effective position. At this point, the throttle valve **364** occupies its fully closed position and the switch **394** is re-opened.

It will be recalled that the throttle valve **364** is connected, by the link **362**, to the fuel metering valve **360** in the fuel injection nozzle **310**. Accordingly, when the throttle valve is cracked, as described above, the fuel metering valve is retracted from its idling position. In the absence of any compensating braking action, the power developed in the engine as a result of this partial opening of the fuel metering valve would substantially reduce the rate at which a vehicle slows down during deceleration. Operation of the vehicle, then, would require frequent braking with resultant rapid wear of the brakes. To overcome this problem, the combined throttle cracking and spark advance mechanism **308** of the present fuel-air ratio control system **302** is effective to advance the engine spark simultaneously with cracking of the throttle valve in such a way that the peak combustion pressure in each cylinder occurs slightly before top dead center, thereby to introduce a braking action into the engine **338**. To this end, one terminal of the switch **396** on the outer end of the throttle cracking arm **390** is connected, through a lead **418** and the engine ignition switch **420**, to one terminal of the engine battery **422**. The other terminal of this battery is grounded, in accordance with customary practice. The other terminal of switch **396** is connected to one terminal of a solenoid valve **424**. Simultaneous closure of the switch **396** and the ignition switch **420**, therefore, is effective to energize the solenoid valve **424**. One port of valve **424** communicates to the engine intake manifold **336** through a vacuum line **426**. A second port of the valve communicates, through a vacuum line **428**, to the induction air passage through the carburetor **300**, just upstream of the throttle valve **364**. A third port of valve **424** communicates, through a vacuum line **430**, to the pneumatic actuator **432** for the standard spark advance mechanism of the engine distributor **434**.

During idling and cruising conditions of the engine **338**, the throttle cracking arm **390** is retracted away from the throttle cracking screw **398** and the switch **394** is opened. Under these conditions, the solenoid valve **424** is deenergized and communicates the vacuum line **428** to the vacuum line **430**. Vacuum line **428** comprises the standard spark advance vacuum line of the engine **338**. Accordingly, during idling and cruising, the absolute pressure level existing at the end of the vacuum line **428** which opens into the carburetor induction air passage is transmitted through the line to the spark advance actuator **432** to effect, in the well-known way, regulation of the engine spark advance in response to the current engine operating conditions in such a way as to attain optimum engine performance. As described earlier, during deceleration, the throttle cracking arm **390** is released to rotate against the throttle cracking screw **398** which is axially positioned in response to engine speed. Operative engagement of the arm with the screw closes the switch **394**, thereby energizing the solenoid valve **424**. This valve, when energized, communicates the vacuum line **426** to the vacuum line **430**, thereby communicating the spark advance actuator **432** directly to the intake manifold **336**. The actuator diaphragm is then directly exposed to the high manifold vacuum level existing during deceleration. This high manifold vacuum is effective to advance the engine spark sufficiently to cause the peak combustion pressure in each cylinder to occur slightly before top dead center, as noted earlier, just creating a braking action in the engine **338**. It is now evident, therefore, that during deceleration, the throttle valve **364** is cracked slightly to permit continued induction air flow to the engine cylinders and thereby substantially reduct exhaust emission of unburned hydrocarbons. Simultaneously, the engine spark is advanced sufficiently to produce in the engine **338** a braking effort which counteracts or overrides the slightly increased engine power which is developed, during deceleration, owing to retention of the nozzle fuel metering valve **360** in its slightly open position by the cracked throttle valve.

During starting, it is desirable to deliver fuel directly to the engine intake manifold **336**. To this end, the pressurized fuel source **352** is connected, through a fuel line **436**, to the carburetor outlet. Fuel line **436** contains a normally closed solenoid valve **438**. One terminal of valve **438** is grounded. The other terminal of the valve is connected to the ungrounded terminal of the engine battery **422** through a lead **440**, the engine starter switch **442**, and the ignition switch **420**. It is evident, therefore, that during starting of the engine **338**, switches **420** and **442** are simultaneously closed to energize the valve **438**. The valve is thereby opened to permit fuel from the fuel

source 352 to be injected directly into the engine intake manifold 336, as required for ease of starting. Opening of the starter switch 442 after the engine has started de-energizes the valve 438, thereby blocking further fuel flow from the fuel source 352 directly into the engine intake manifold. Thereafter, fuel flow to the carburetor 300 is regulated by the fuel-air ratio control system 302. During deceleration, the high manifold vacuum level existing in the engine intake manifold 336 reacts on the fuel pressure control lever 314 of the transducer 304, through the pneumatic actuator 376, in a direction to increase the closing force on the fuel pressure control valve 340, thereby to reduce the rate of fuel injection into the carburetor during deceleration. This reduction in the rate of fuel injection aids in minimizing exhaust emission of unburned hydrocarbons during deceleration. During extremely rapid deceleration occasioned by application of the vehicle brakes, it is desirable to provide a more rapid reduction in the rate of fuel injection. To this end, the fuel line 354 leading to the fuel injection nozzle 310 contains a solenoid valve 444. One terminal of this valve is grounded. The other terminal of the valve is connected to the ungrounded terminal of the battery 422 through the ignition switch 420 and the series connected contacts 446*a* and 448*a* of a pair of relays 446 and 448, respectively. Relay contacts 446*a* are normally open. Relay contacts 448*a* are normally closed. One terminal of the coil 446*b* of relay 446 and one terminal of the coil 448*b* of relay 448 are grounded. The other terminal of the relay coil 446*b* is connected to the engine generator (not shown) through a lead 450. The other terminal of relay coil 448*b* is connected, through a lead 452, a normally open switch 454, the lead 418, and the ignition switch 420, to the ungrounded terminal of the engine battery 422. Switch 454 is operatively connected to the brake system of the vehicle in such a way as to be closed in response to application of the brakes. Closing of this switch energizes the relay 448, thereby opening the relay contacts 448*a*. Relay 446 is energized, to close its normally open contacts 446*a*, in response to a predetermined generator output voltage. Valve 444 is a normally closed valve which is opened in response to energizing of the valve by simultaneous closing of the relay contacts 446*a* and 448*a*.

It is now evident, therefore, that prior to starting of the engine 338, both relays 446 and 448 are de-energized and the valve 444 is closed. During starting of the engine, the ignition switch 420 and the starting switch 442 are closed. Closing of the starter switch 442 opens the solenoid valve 438, thereby permitting fuel flow from the fuel source 352 directly into the engine manifold 336. During initial cranking of the engine, the output voltage of the generator is insufficient to energize the relay 446, whereby the relay contacts 446*a* remain open and the fuel control valve 444 remains closed. When the engine starts, the generator output voltage rises sufficiently to energize the solenoid 446 and thereby close its normally open contacts 446*a* to effect opening of the fuel control valve 444. This valve remains open until the brake switch 454 is closed by application of the vehicle brakes. Closing of this switch opens the relay contacts 448*a*, thereby de-energizing and closing the valve 444 to cut off fuel flow to the fuel injection nozzle 310. Relay 448 is de-energized, to effect re-opening of the valve 444, when the brake switch 454 is re-opened in response to release of the brake pedal. As noted earlier, this fuel cut off during braking is effective to reduce exhaust emission of unburned hydrocarbons during deceleration occasioned by braking.

It is evident, of course, that if the brake pedal were depressed during closing of the starting switch 442 to start the engine 338, the fuel control valve 444 would remain closed, thus preventing the engine from starting. To avoid this problem, there is connected in series with the brake switch 454 a normally open switch 456 which is closed in response to movement of the vehicle shift lever to its drive position. Switch 456, therefore, is open during starting of the engine, thereby preventing closure of the valve 444 by closing of the brake switch 454.

When the engine transmission is in neutral position, it is possible that slight acceleration of the engine may initiate a feedback action through the throttle cracking speed sensing fan 406 which will cause overrunning or racing of the engine. To avoid this problem, a vane 458 is pivotally mounted in front of the fan 406 for rotation between its phantom and full line positions in the drawings. In its phantom line position, the vane 458 blocks engine fan induced air flow to the fan 406 sufficiently to prevent the feedback action referred to above. In its full line position, the vane 458 permits normal rotation of the fan 406 in response to the engine fan induced air flow. Vane 458 is positioned by a rotary solenoid 460 which normally retains the vane in its full line position. One terminal of the solenoid 460 is grounded. The other terminal of the solenoid is connected to the ungrounded terminal of the engine battery 422 through the ignition switch 420 and a second normally closed switch 462 operated by the vehicle shift lever. This latter switch is opened in response to movement of the shift lever to its drive position. It is now evident, therefore, that when the engine 338 is initially started by closing of the ignition switch 420, the shift lever switch 462 is closed, thereby energizing the rotary solenoid 460 to rotate the vane 458 to its phantom line position, wherein the vane inhibits rotation of the fan 406 by the engine fan induced air flow. When the vehicle shift lever is moved to its drive position, the switch 462 is opened to return the vane 458 to its full line position, wherein it permits normal operation of the throttle cracking means 308.

While the invention has herein been shown and described in what is conceived to be its most practical and preferred embodiments, it is recognized that departures may be made therefrom within the scope of the invention, which is not to be limited to the details disclosed herein, but is to be accorded the full scope of the claims so as to embrace any and all equivalent devices.

I claim:

1. In a carburetion system for an internal combustion engine including a carburetor having an induction air inlet, an outlet for connection to the engine intake manifold, a mixing chamber between said inlet and outlet, and a fuel injection nozzle for injecting fuel under pressure into said chamber, a fuel-air ratio control system comprising: means for supplying fuel under pressure to said nozzle, and means for regulating the fuel pressure to said nozzle in response to the rate of induction air flow through said carburetor including a fuel pressure regulating valve having a spring-loaded valve member, a pneumatic actuator, a venturi dipsosed within the induction air passage through said carburetor, means communicating the throat of said venturi to said actuator for rendering said actuator responsive to induction air flow rate through said carburetor, means operatively connecting said actuator to said valve member in such manner that said valve member is opened against the spring force thereon in response to increasing induction air flow rate through said carburetor, and non-linear spring means operatively associated with said actuator for opposing the opening force exerted on said valve member by said actuator with a spring force which increases in accordance with a predetermined non-linear function in response to increasing induction air flow rate.

2. In a carburetion system for an internal combustion engine including a carburetor having an induction air inlet, an outlet for connection to the engine intake manifold, a mixing chamber between said inlet and outlet, and a fuel injection nozzle for injecting fuel under pressure into said chamber, a fuel-air ratio control system comprising: means for supplying fuel under pressure to said nozzle, and means

for regulating the fuel pressure to said nozzle in response to the rate of induction air flow through said carburetor including a fuel pressure regulating valve having a spring-loaded valve member, a pneumatic actuator, a venturi disposed within the induction air passage through said carburetor, means communicating the throat of said venturi to said actuator for rendering said actuator responsive to induction air flow rate through said carburetor, means operatively connecting said actuator to said valve member in such manner that said valve member is opened against the spring force thereon in response to increasing induction air flow rate through said carburetor, and non-linear spring means operatively associated with said actuator for opposing the opening force exerted on said valve member by said actuator with a spring force which increases in accordance with a predetermined non-linear function in response to increasing induction air flow rate, and said fuel supply means comprises a fuel line leading to said nozzle, and restriction means in said fuel line for inducing turbulence into the fuel flowing through said fuel line.

3. In a carburetion system for an internal combustion engine including a carburetor having an induction air inlet, an outlet for connection to the engine intake manifold, a mixing chamber between said inlet and outlet, and a fuel injection nozzle for injecting fuel under pressure into said chamber, a fuel-air ratio control system comprising:

means for supplying fuel under pressure to said nozzle, and

means for regulating the fuel pressure to said nozzle in response to engine temperature including a fuel pressure regulating valve, a pneumatic actuator, passage means communicating said actuator to the engine intake manifold for rendering said actuator responsive to intake manifold vacuum, means operatively connecting said actuator to said valve in such manner that the manifold vacuum in said actuator tends to open said valve, a normally closed solenoid valve in said passage means, an automatic choke valve in the induction air passage through said carburetor, and a switch operated by said choke valve and connected to said solenoid valve for opening said solenoid valve when said choke valve is at least partially closed, thereby to communicate said actuator to said engine intake manifold.

4. In a carburetion system for an internal combustion engine including a carburetor having an induction air inlet, an outlet for connection to the engine intake manifold, a mixing chamber between said inlet and outlet, and a fuel inejction nozzle for injecting fuel under pressure into said chamber, a fuel-air ratio control system comprising:

means for supplying fuel under pressure to said nozzle, and

means for regulating the fuel pressure to said nozzle in response to engine temperature including a fuel pressure regulating valve, a pneumatic actuator, an automatic choke valve responsive to engine temperature disposed within said carburetor inlet, means communicating said inlet downstream of said choke valve to said actuator for rendering said actuator responsive to the absolute pressure in said inlet downstream of said choke valve, and means operatively connecting said actuator to said pressure regulating valve in such manner that decreasing pressure in said inlet downstream of said choke valve opens said pressure regulating valve.

5. In a carburetion system for an internal combustion engine including a carburetor having an induction air inlet, an outlet for connection to the engine intake manifold, a mixing chamber between said inlet and outlet, and a fuel injection nozzle for injecting fuel under pressure into said chamber, a fuel-air ratio control system comprising:

means for supplying fuel under pressure to said nozzle,

a fuel metering valve in said nozzle for regulating fuel flow through said nozzle,

a throttle valve in said carburetor outlet,

means operatively connecting said throttle valve and fuel metering valve for adjustment thereof in unison,

means for regulating the fuel pressure to said nozzle including a fuel pressure regulating valve, a pneumatic actuator, passage means communicating said actuator to the engine intake manifold for rendering said actuator responsive to intake manifold vacuum, means operatively connecting said actuator to said fuel pressure regulating valve in such manner that increasing manifold vacuum opens said valve, and a restriction in said passage means for delaying the response of said actuator to decreasing manifold vacuum, thereby to effect automatic enrichment of the combustible mixture delivered to the engine during acceleration.

additional passage means arranged in parallel with said restriction and communicating said actuator to said intake manifold, and

normally closed spring-loaded check valve means in said additional passage means responsive to the pressure differential across said restriction and set to open in response to an absolute pressure in said actuator which is greater by a predetermined amount than said manifold vacuum, thereby to render said actuator instantaneously responsive to an acceleration command immediately following a deceleration command.

6. In a carburetion system for an internal combustion engine including a carburetor having an induction air inlet, an outlet for connection to the engine intake manifold, a mixing chamber between said inlet and outlet, and a fuel injection nozzle for injecting fuel under pressure into said chamber, a fuel-air ratio control system comprising:

means for supplying fuel under pressure to said nozzle,

a fuel metering valve in said nozzle for regulating fuel flow through said nozzle,

a throttle valve in said carburetor outlet,

means operatively connecting said throttle valve and fuel metering valve for adjustment thereof in unison,

means for regulating the fuel pressure to said nozzle including a fuel pressure regulating valve, a pneumatic actuator, passage means communicating said actuator to the engine intake manifold for rendering said actuator responsive to intake manifold vacuum, means operatively connecting said actuator to said fuel pressure regulating valve in such manner that increasing manifold vacuum opens said valve, and a restriction in said passage means for delaying the response of said actuator to decreasing manifold vacuum, thereby to effect automatic enrichment of the combustible mixture delivered to the engine during acceleration.

additional passage means arranged in parallel with said restriction and communicating said actuator to said intake manifold, and

normally closed spring-loaded valve means in said additional passage means and responsive to intake manifold vacuum in such manner that said latter valve means open in response to a decrease in manifold vacuum to a predetermined level, thereby to render said actuator instantaneously responsive to a full throttle acceleration command.

7. In a carburetion system for an internal combustion engine including a carburetor having an induction air inlet, an outlet for connection to the engine intake manifold, a mixing chamber between said inlet and outlet, and a fuel injection nozzle for injecting fuel under pressure into said chamber, a fuel-air ratio control system comprising:

means for supplying fuel under pressure to said nozzle,

a fuel metering valve in said nozzle for regulating fuel flow through the nozzle,

a throttle valve in said carburetor outlet,

means operatively connecting said throttle valve and

fuel metering valve for adjustment thereof in unison,

a fuel pressure regulating valve for regulating fuel pressure to said nozzle including a movable valve element,

means responsive to the vacuum level in the engine intake manifold and operatively connected to said valve element for moving said element toward its open position in response to increasing manifold vacuum,

first stop means for limiting opening movement of said valve element,

second retractable stop means for limiting opening movement of said valve element,

said second stop means when extended limiting opening movement of said valve element to a given position and said second stop means when retracted permitting further opening movement of said valve element to a second position of engagement with said first stop means, and

means operatively connected to said second stop means for effecting extension and retraction thereof in response to engine temperature in such manner that said second stop means is retracted when the engine temperature is below a preselected temperature and said second stop means is retracted when the engine temperature exceeds said preselected temperature.

8. In a carburetion system for an internal combustion engine including a carburetor having an induction air inlet, an outlet for connection to the engine intake manifold, a mixing chamber between said inlet and outlet, and a fuel injection nozzle for injecting fuel under pressure into said chamber, a fuel-air ratio control system comprising:

means for supplying fuel under pressure to said nozzle,

a fuel pressure regulating valve for regulating the fuel pressure to said nozzle including a movable valve element,

means responsive to induction air flow rate through said carburetor operatively connected to said valve element for effecting opening movement of said element in response to increasing induction air flow rate through said carburetor,

an adjustable stop for limiting closing movement of said valve element, whereby said valve element has a limiting position determined by the setting of said stop, and

means responsive to atmospheric pressure operatively connected to said stop for positioning said stop in such manner as to increase the fuel pressure to said nozzle in said limiting position of said valve element in response to increasing atmospheric pressure and reducing the fuel pressure to said nozzle in said limiting position of said valve element in response to decreasing atmospheric pressure.

References Cited

UNITED STATES PATENTS

1,897,967	2/1933	Bruckner.	
2,341,257	2/1944	Wunsch.	
2,638,912	5/1953	Lee.	
2,957,467	10/1960	Ball.	
3,078,833	2/1963	Whitehurst.	
3,113,561	12/1963	Heintz	123—139 X
3,240,191	3/1966	Wallis	123—139 X
3,288,445	11/1966	Mennesson	123—139 X

RALPH D. BLAKESLEE, *Primary Examiner.*