General Authorization and Extension of Time

The Commissioner is hereby authorized to charge any additional fees which may be required regarding this application under 37 C.F.R. §§ 1.16-1.17, or credit any overpayment, to Deposit Account No. 50-2623. Should no proper payment be enclosed herewith, as by credit card authorization being in the wrong amount, unsigned, post-dated, otherwise improper or informal or even entirely missing, the Commissioner is authorized to charge the unpaid amount to Deposit Account No. 50-2623. If any extensions of time are needed for timely acceptance of papers submitted herewith, Applicant hereby petitions for such extensions under 37 C.F.R. §1.136 and authorizes payment of any such extensions fees to Deposit Account No. 50-2623. Please consider this a general authorization to charge any fee that is due in this case, if not otherwise timely paid, to Deposit Account No. 50-2623.

/Kevin R. Rosin/

Kevin R. Rosin
Registration No. 55,584
Direct Dial 262-268-8100 ext. 16
krr@zpspatents.com

Dated: April 24, 2018
Attorney Docket No.: CET1090.042

P.O. ADDRESS:
Ziolkowski Patent Solutions Group, SC
136 South Wisconsin Street
Port Washington, WI 53074
262-268-8100

Champion - EX2082, Page 365 of 575
Harbor Freight Tools USA Inc. et al v. Champion Power Equip., Inc.
IPR2025-01121

Electronic Acknowledgement Receipt

EFS ID:	32431558
Application Number:	14925441
International Application Number:	
Confirmation Number:	1059
Title of Invention:	BATTERYLESS DUAL FUEL ENGINE WITH LIQUID FUEL CUT-OFF
First Named Inventor/Applicant Name:	Kendall J. Collie
Customer Number:	26629
Filer:	Kevin Roger Rosin./Robyn Templin
Filer Authorized By:	Kevin Roger Rosin.
Attorney Docket Number:	CET1090.042
Receipt Date:	24-APR-2018
Filing Date:	28-OCT-2015
Time Stamp:	16:32:25
Application Type:	Utility under 35 USC 111(a)

Payment information:

Submitted with Payment	no

File Listing:

Document Number	Document Description	File Name	File Size(Bytes)/ Message Digest	Multi Part /.zip	Pages (if appl.)
1		Response.pdf	196258 8c42f61cec13377ae0a576b1ddc63be92fa6d4f2	yes	20

	Multipart Description/PDF files in .zip description		
	Document Description	**Start**	**End**
	Amendment/Req. Reconsideration-After Non-Final Reject	1	1
	Claims	2	11
	Applicant Arguments/Remarks Made in an Amendment	12	20
Warnings:			
Information:			
	Total Files Size (in bytes):	196258	

This Acknowledgement Receipt evidences receipt on the noted date by the USPTO of the indicated documents, characterized by the applicant, and including page counts, where applicable. It serves as evidence of receipt similar to a Post Card, as described in MPEP 503.

New Applications Under 35 U.S.C. 111
If a new application is being filed and the application includes the necessary components for a filing date (see 37 CFR 1.53(b)-(d) and MPEP 506), a Filing Receipt (37 CFR 1.54) will be issued in due course and the date shown on this Acknowledgement Receipt will establish the filing date of the application.
National Stage of an International Application under 35 U.S.C. 371
If a timely submission to enter the national stage of an international application is compliant with the conditions of 35 U.S.C. 371 and other applicable requirements a Form PCT/DO/EO/903 indicating acceptance of the application as a national stage submission under 35 U.S.C. 371 will be issued in addition to the Filing Receipt, in due course.
New International Application Filed with the USPTO as a Receiving Office
If a new international application is being filed and the international application includes the necessary components for an international filing date (see PCT Article 11 and MPEP 1810), a Notification of the International Application Number and of the International Filing Date (Form PCT/RO/105) will be issued in due course, subject to prescriptions concerning national security, and the date shown on this Acknowledgement Receipt will establish the international filing date of the application.

PTO/SB/06 (09-11)
Approved for use through 1/31/2014. OMB 0651-0032
U.S. Patent and Trademark Office; U.S. DEPARTMENT OF COMMERCE
Under the Paperwork Reduction Act of 1995, no persons are required to respond to a collection of information unless it displays a valid OMB control number.

PATENT APPLICATION FEE DETERMINATION RECORD

Substitute for Form PTO-875

Application or Docket Number	Filing Date	
14/925,441	10/28/2015	☐ To be Mailed

ENTITY: ☐ LARGE ☒ SMALL ☐ MICRO

APPLICATION AS FILED – PART I

FOR	(Column 1) NUMBER FILED	(Column 2) NUMBER EXTRA	RATE ($)	FEE ($)
☐ BASIC FEE (37 CFR 1.16(a), (b), or (c))	N/A	N/A	N/A	
☐ SEARCH FEE (37 CFR 1.16(k), (i), or (m))	N/A	N/A	N/A	
☐ EXAMINATION FEE (37 CFR 1.16(o), (p), or (q))	N/A	N/A	N/A	
TOTAL CLAIMS (37 CFR 1.16(i))	minus 20 =	*	x $ =	
INDEPENDENT CLAIMS (37 CFR 1.16(h))	minus 3 =	*	x $ =	
☐ APPLICATION SIZE FEE (37 CFR 1.16(s))	If the specification and drawings exceed 100 sheets of paper, the application size fee due is $310 ($155 for small entity) for each additional 50 sheets or fraction thereof. See 35 U.S.C. 41(a)(1)(G) and 37 CFR 1.16(s).			
☐ MULTIPLE DEPENDENT CLAIM PRESENT (37 CFR 1.16(j))				
* If the difference in column 1 is less than zero, enter "0" in column 2.			TOTAL	

APPLICATION AS AMENDED – PART II

AMENDMENT 04/24/2018

	(Column 1) CLAIMS REMAINING AFTER AMENDMENT		(Column 2) HIGHEST NUMBER PREVIOUSLY PAID FOR	(Column 3) PRESENT EXTRA	RATE ($)	ADDITIONAL FEE ($)
Total (37 CFR 1.16(i))	- 63	Minus	** 63	= 0	x $50 =	0
Independent (37 CFR 1.16(h))	- 4	Minus	***4	= 0	x $230 =	0
☐ Application Size Fee (37 CFR 1.16(s))						
☐ FIRST PRESENTATION OF MULTIPLE DEPENDENT CLAIM (37 CFR 1.16(j))						
					TOTAL ADD'L FEE	0

AMENDMENT

	(Column 1) CLAIMS REMAINING AFTER AMENDMENT		(Column 2) HIGHEST NUMBER PREVIOUSLY PAID FOR	(Column 3) PRESENT EXTRA	RATE ($)	ADDITIONAL FEE ($)
Total (37 CFR 1.16(i))	-	Minus	**	=	x $ =	
Independent (37 CFR 1.16(h))	-	Minus	***	=	x $ =	
☐ Application Size Fee (37 CFR 1.16(s))						
☐ FIRST PRESENTATION OF MULTIPLE DEPENDENT CLAIM (37 CFR 1.16(j))						
					TOTAL ADD'L FEE	

* If the entry in column 1 is less than the entry in column 2, write "0" in column 3.
** If the "Highest Number Previously Paid For" IN THIS SPACE is less than 20, enter "20".
*** If the "Highest Number Previously Paid For" IN THIS SPACE is less than 3, enter "3".
The "Highest Number Previously Paid For" (Total or Independent) is the highest number found in the appropriate box in column 1.

SLIE
NICHELE PETERSON

This collection of information is required by 37 CFR 1.16. The information is required to obtain or retain a benefit by the public which is to file (and by the USPTO to process) an application. Confidentiality is governed by 35 U.S.C. 122 and 37 CFR 1.14. This collection is estimated to take 12 minutes to complete, including gathering, preparing, and submitting the completed application form to the USPTO. Time will vary depending upon the individual case. Any comments on the amount of time you require to complete this form and/or suggestions for reducing this burden, should be sent to the Chief Information Officer, U.S. Patent and Trademark Office, U.S. Department of Commerce, P.O. Box 1450, Alexandria, VA 22313-1450. DO NOT SEND FEES OR COMPLETED FORMS TO THIS ADDRESS. **SEND TO: Commissioner for Patents, P.O. Box 1450, Alexandria, VA 22313-1450.**
If you need assistance in completing the form, call 1-800-PTO-9199 and select option 2.

PTO/SB/08a (03-15)
Approved for use through 07/31/2016. OMB 0651-0031
U.S. Patent and Trademark Office; U.S. DEPARTMENT OF COMMERCE
Under the Paperwork Reduction Act of 1995, no persons are required to respond to a collection of information unless it contains a valid OMB control number.

INFORMATION DISCLOSURE STATEMENT BY APPLICANT

(Not for submission under 37 CFR 1.99)

Application Number	14925441
Filing Date	2015-10-28
First Named Inventor	Kendall J. Collie et al.
Art Unit	3747
Examiner Name	Long T. Tran
Attorney Docket Number	CET1090.042

U.S.PATENTS Remove

Examiner Initial*	Cite No	Patent Number	Kind Code[1]	Issue Date	Name of Patentee or Applicant of cited Document	Pages,Columns,Lines where Relevant Passages or Relevant Figures Appear
	1					

If you wish to add additional U.S. Patent citation information please click the Add button. Add

U.S.PATENT APPLICATION PUBLICATIONS Remove

Examiner Initial*	Cite No	Publication Number	Kind Code[1]	Publication Date	Name of Patentee or Applicant of cited Document	Pages,Columns,Lines where Relevant Passages or Relevant Figures Appear
	1					

If you wish to add additional U.S. Published Application citation information please click the Add button. Add

FOREIGN PATENT DOCUMENTS Remove

Examiner Initial*	Cite No	Foreign Document Number[3]	Country Code[2] i	Kind Code[4]	Publication Date	Name of Patentee or Applicant of cited Document	Pages,Columns,Lines where Relevant Passages or Relevant Figures Appear	T[5]
	1	2060477	CN	U	1990-08-15	Zhao Yunying		

If you wish to add additional Foreign Patent Document citation information please click the Add button Add

NON-PATENT LITERATURE DOCUMENTS Remove

Examiner Initials*	Cite No	Include name of the author (in CAPITAL LETTERS), title of the article (when appropriate), title of the item (book, magazine, journal, serial, symposium, catalog, etc), date, pages(s), volume-issue number(s), publisher, city and/or country where published.	T[5]

INFORMATION DISCLOSURE STATEMENT BY APPLICANT (Not for submission under 37 CFR 1.99)	Application Number	14925441
	Filing Date	2015-10-28
	First Named Inventor	Kendall J. Collie et al.
	Art Unit	3747
	Examiner Name	Long T. Tran
	Attorney Docket Number	CET1090.042

	1	

If you wish to add additional non-patent literature document citation information please click the Add button Add

EXAMINER SIGNATURE

Examiner Signature		Date Considered	

*EXAMINER: Initial if reference considered, whether or not citation is in conformance with MPEP 609. Draw line through a citation if not in conformance and not considered. Include copy of this form with next communication to applicant.

[1] See Kind Codes of USPTO Patent Documents at www.USPTO.GOV or MPEP 901.04. [2] Enter office that issued the document, by the two-letter code (WIPO Standard ST.3). [3] For Japanese patent documents, the indication of the year of the reign of the Emperor must precede the serial number of the patent document. [4] Kind of document by the appropriate symbols as indicated on the document under WIPO Standard ST.16 if possible. [5] Applicant is to place a check mark here if English language translation is attached.

INFORMATION DISCLOSURE STATEMENT BY APPLICANT (Not for submission under 37 CFR 1.99)		
	Application Number	14925441
	Filing Date	2015-10-28
	First Named Inventor	Kendall J. Collie et al.
	Art Unit	3747
	Examiner Name	Long T. Tran
	Attorney Docket Number	CET1090.042

CERTIFICATION STATEMENT

Please see 37 CFR 1.97 and 1.98 to make the appropriate selection(s):

☒ That each item of information contained in the information disclosure statement was first cited in any communication from a foreign patent office in a counterpart foreign application not more than three months prior to the filing of the information disclosure statement. See 37 CFR 1.97(e)(1).

OR

☐ That no item of information contained in the information disclosure statement was cited in a communication from a foreign patent office in a counterpart foreign application, and, to the knowledge of the person signing the certification after making reasonable inquiry, no item of information contained in the information disclosure statement was known to any individual designated in 37 CFR 1.56(c) more than three months prior to the filing of the information disclosure statement. See 37 CFR 1.97(e)(2).

See attached certification statement.

The fee set forth in 37 CFR 1.17 (p) has been submitted herewith.

A certification statement is not submitted herewith.

SIGNATURE

A signature of the applicant or representative is required in accordance with CFR 1.33, 10.18. Please see CFR 1.4(d) for the form of the signature.

Signature	/Stephanie M. Laundre/	Date (YYYY-MM-DD)	2018-02-21
Name/Print	Stephanie M. Laundre	Registration Number	65124

This collection of information is required by 37 CFR 1.97 and 1.98. The information is required to obtain or retain a benefit by the public which is to file (and by the USPTO to process) an application. Confidentiality is governed by 35 U.S.C. 122 and 37 CFR 1.14. This collection is estimated to take 1 hour to complete, including gathering, preparing and submitting the completed application form to the USPTO. Time will vary depending upon the individual case. Any comments on the amount of time you require to complete this form and/or suggestions for reducing this burden, should be sent to the Chief Information Officer, U.S. Patent and Trademark Office, U.S. Department of Commerce, P.O. Box 1450, Alexandria, VA 22313-1450. DO NOT SEND FEES OR COMPLETED FORMS TO THIS ADDRESS. **SEND TO: Commissioner for Patents, P.O. Box 1450, Alexandria, VA 22313-1450.**

Privacy Act Statement

The Privacy Act of 1974 (P.L. 93-579) requires that you be given certain information in connection with your submission of the attached form related to a patent application or patent. Accordingly, pursuant to the requirements of the Act, please be advised that: (1) the general authority for the collection of this information is 35 U.S.C. 2(b)(2); (2) furnishing of the information solicited is voluntary; and (3) the principal purpose for which the information is used by the U.S. Patent and Trademark Office is to process and/or examine your submission related to a patent application or patent. If you do not furnish the requested information, the U.S. Patent and Trademark Office may not be able to process and/or examine your submission, which may result in termination of proceedings or abandonment of the application or expiration of the patent.

The information provided by you in this form will be subject to the following routine uses:

1. The information on this form will be treated confidentially to the extent allowed under the Freedom of Information Act (5 U.S.C. 552) and the Privacy Act (5 U.S.C. 552a). Records from this system of records may be disclosed to the Department of Justice to determine whether the Freedom of Information Act requires disclosure of these record s.

2. A record from this system of records may be disclosed, as a routine use, in the course of presenting evidence to a court, magistrate, or administrative tribunal, including disclosures to opposing counsel in the course of settlement negotiations.

3. A record in this system of records may be disclosed, as a routine use, to a Member of Congress submitting a request involving an individual, to whom the record pertains, when the individual has requested assistance from the Member with respect to the subject matter of the record.

4. A record in this system of records may be disclosed, as a routine use, to a contractor of the Agency having need for the information in order to perform a contract. Recipients of information shall be required to comply with the requirements of the Privacy Act of 1974, as amended, pursuant to 5 U.S.C. 552a(m).

5. A record related to an International Application filed under the Patent Cooperation Treaty in this system of records may be disclosed, as a routine use, to the International Bureau of the World Intellectual Property Organization, pursuant to the Patent Cooperation Treaty.

6. A record in this system of records may be disclosed, as a routine use, to another federal agency for purposes of National Security review (35 U.S.C. 181) and for review pursuant to the Atomic Energy Act (42 U.S.C. 218(c)).

7. A record from this system of records may be disclosed, as a routine use, to the Administrator, General Services, or his/her designee, during an inspection of records conducted by GSA as part of that agency's responsibility to recommend improvements in records management practices and programs, under authority of 44 U.S.C. 2904 and 2906. Such disclosure shall be made in accordance with the GSA regulations governing inspection of records for this purpose, and any other relevant (i.e., GSA or Commerce) directive. Such disclosure shall not be used to make determinations about individuals.

8. A record from this system of records may be disclosed, as a routine use, to the public after either publication of the application pursuant to 35 U.S.C. 122(b) or issuance of a patent pursuant to 35 U.S.C. 151. Further, a record may be disclosed, subject to the limitations of 37 CFR 1.14, as a routine use, to the public if the record was filed in an application which became abandoned or in which the proceedings were terminated and which application is referenced by either a published application, an application open to public inspections or an issued patent.

9. A record from this system of records may be disclosed, as a routine use, to a Federal, State, or local law enforcement agency, if the USPTO becomes aware of a violation or potential violation of law or regulation.

Espacenet

Bibliographic data: CN2060477 (U) — 1990-08-15

CARBURETTOR

Inventor(s):	YUNYING ZHAO [CN] ± (ZHAO YUNYING)
Applicant(s):	ZHAO YUNYING [CN] ± (ZHAO YUNYING)
Classification:	**- international:** ***F02M3/05;*** (IPC1-7): F02M3/05 **- cooperative:**
Application number:	CN1989217629U 19890927
Priority number(s):	CN1989217629U 19890927

Abstract of CN2060477 (U)

The utility model relates to a carburetor used for a combustion engine. The carburetor used for a combustion engine is characterized in that a fuel oil switch is arranged at a fuel inlet of a carburetor, and a restoring spring is arranged on a valve core of the fuel oil switch. A torsional handle of the valve core is connected with an operation draw rod. When an automobile is put into gear to slide down a slope, the fuel oil switch is closed by a driver through the operation draw rod, and the purpose of oil saving is achieved. When the operation draw rod is released, the fuel oil switch is automatically restored. The structure of the carburetor used for a combustion engine is simple. The current carburetor is convenient to modify. The carburetor used for a combustion engine is particularly suitable for a vehicle which often runs in a mountain area.

(19)中华人民共和国专利局

(11)公告号 CN 2060477U

(12)实用新型专利申请说明书

[21] 申请号 89217629.6

[51] Int.Cl⁵

F02M 3/05

(43)公告日 1990年8月15日

(22)申请日 89.9.27

(71)申请人 赵云英

地址 河北省安国县奥各庄乡邓各庄村 071202

(72)设计人 赵云英

(74)专利代理机构 河北省专利事务所

代理人 朱祥熙

说明书页数: 2 附图页数: 2

(54)实用新型名称 一种汽化器

(57)摘要

供摩托发动机使用的汽化器，其特征是汽化器的燃料入口处设有一燃油开关该开关的阀芯上设有复位弹簧，阀芯扭把与操作拉杆连接。当汽车下坡挂挡滑行时，司机经拉杆关闭燃油开关，达到节油目的；释放拉杆，燃油开关自动复位。本实用新型结构简单，对现行汽化器改造方便，特别适用于经常在山区行驶的车辆。

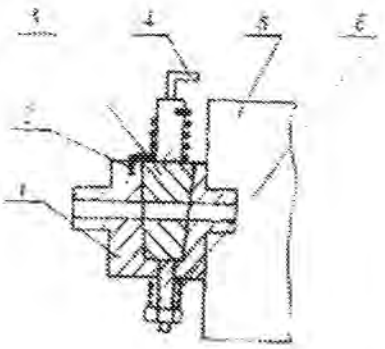

权 利 要 求 书

1、一种摩托发动机使用的汽化器，其特征在于所述的汽化器摩油入口处，有一摩油开关。

2、根据权利要求1所述的汽化器，其特征在于摩油开关由阀体1、复位弹簧2、阀芯3、扭把4和拉索弹簧6组成。

3、根据权利要求1或2所述的汽化器，其特征在于所述阀体1与汽化器外壳5，可以设计为一体或分离式。

说　　明　　书

一种汽化器

本实用新型属于一种供燃烧发动机使用的汽化器。

现有汽车发动机使用的汽化器，燃油入口都没有燃油开关，给操作规程规定，汽车下坡时，不得空挡滑行，以保证汽车发动机带动压气机工作，使刹车有足够气压，而汽车下坡挂挡滑行时，发动机处于被驱动状态，发动机不需要汽化器供给可燃混合汽，现有技术决定了只要发动机工作，燃油泵就通过汽化器向发动机供给可燃混合汽，这样大量的燃油被浪费掉。

本实用新型的目的是：当汽车下坡挂挡滑行时，关闭汽化器燃油入口，使发动机在不烧燃油的情况下，带动机油泵、压汽机工作，达到下坡节油的目的。

以下结合附图对本实用新型进行详细描述。

附图1为汽车发动系统示意图。

附图2为本实用新型燃油开关结构示意图。

参看附图1，发动机工作时，带动机油泵、燃油泵和压气机工作，机油泵向发动机供给润滑机油，燃油泵通过汽化器向发动机供给可燃混合汽，压气机供刹车足够的气压，所以现有技术的缺点是，只要发动机工作，燃油泵就会通过汽化器向发动机供给可燃混合气。

当汽车下坡时，汽车可挂挡滑行，由于发动机处于被驱动状态，不需要汽化器供给可燃混合气，司机可通过拉杆关闭汽化器燃油入口开关，使燃油不能进入汽化器，同时关闭点火开关，发动机在不

烧燃油的情况下，带动机油泵、压气机工作，这样即保证了重油机的润滑和刹车气压，又达到节省燃油的目的，下坡路上，打开点火开关和汽化器燃油入口开关，汽车恢复正常运行。

参看图2，汽化器燃油进口，由阀体1、复位弹簧2、阀芯3、扭把4及拉簧弹簧6组成了燃油开关，阀体1与汽化器外壳5可是分离或，也可制成一体，需要关闭燃油进口时，司机通过拉杆微动扭把4，使阀芯3上的孔与阀体1上的孔错开，使汽化器进口断开，释放拉杆阀芯3在复位弹簧2作用下复位，打开汽化器进油口，拉簧弹簧6将阀芯3与阀体1紧密接触，以防接触面漏油。

本实用新型结构简单，对经常行驶在山区的车辆，节油效果更显著，实现了车辆下坡路段安全滑行，可广泛用于各种汽油车和柴油车。

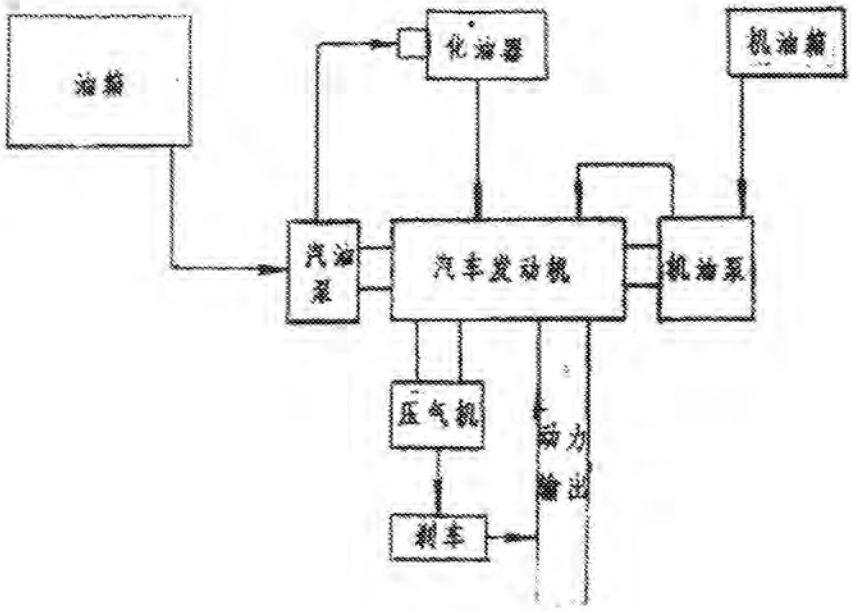

图1

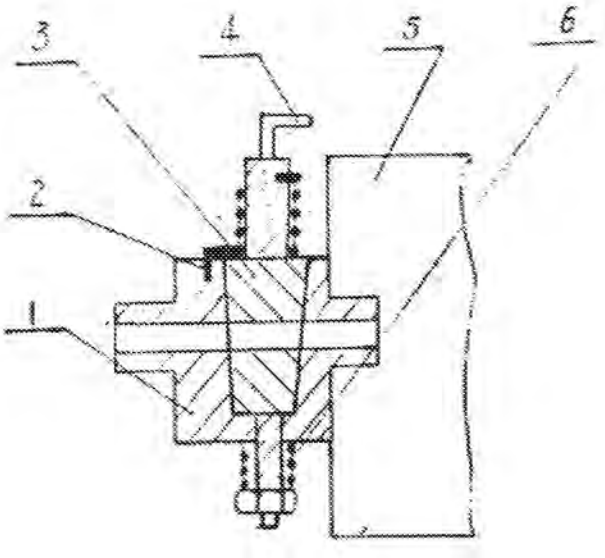

图2

Electronic Acknowledgement Receipt

EFS ID:	31847017
Application Number:	14925441
International Application Number:	
Confirmation Number:	1059
Title of Invention:	BATTERYLESS DUAL FUEL ENGINE WITH LIQUID FUEL CUT-OFF
First Named Inventor/Applicant Name:	Kendall J. Collie
Customer Number:	26629
Filer:	Stephanie Mueller Laundre/Robyn Templin
Filer Authorized By:	Stephanie Mueller Laundre
Attorney Docket Number:	CET1090.042
Receipt Date:	21-FEB-2018
Filing Date:	28-OCT-2015
Time Stamp:	14:11:35
Application Type:	Utility under 35 USC 111(a)

Payment information:

Submitted with Payment	no

File Listing:

Document Number	Document Description	File Name	File Size(Bytes)/ Message Digest	Multi Part /.zip	Pages (if appl.)
1	Information Disclosure Statement (IDS) Form (SB08)	SuppIDS.pdf	1034617 3995c11e2a395a77e327afaefa82792f2e54e8b6	no	4

Warnings:

Information:					
A U.S. Patent Number Citation or a U.S. Publication Number Citation is required in the Information Disclosure Statement (IDS) form for autoloading of data into USPTO systems. You may remove the form to add the required data in order to correct the Informational Message if you are citing U.S. References. If you chose not to include U.S. References, the image of the form will be processed and be made available within the Image File Wrapper (IFW) system. However, no data will be extracted from this form. Any additional data such as Foreign Patent Documents or Non Patent Literature will be manually reviewed and keyed into USPTO systems.					
2	Foreign Reference	FPD1-CN2060477U.pdf	451233 2141ee71ce889dab107045535acd6871165 25e46	no	7
Warnings:					
Information:					
		Total Files Size (in bytes):	1485850		

This Acknowledgement Receipt evidences receipt on the noted date by the USPTO of the indicated documents, characterized by the applicant, and including page counts, where applicable. It serves as evidence of receipt similar to a Post Card, as described in MPEP 503.

New Applications Under 35 U.S.C. 111
If a new application is being filed and the application includes the necessary components for a filing date (see 37 CFR 1.53(b)-(d) and MPEP 506), a Filing Receipt (37 CFR 1.54) will be issued in due course and the date shown on this Acknowledgement Receipt will establish the filing date of the application.
National Stage of an International Application under 35 U.S.C. 371
If a timely submission to enter the national stage of an international application is compliant with the conditions of 35 U.S.C. 371 and other applicable requirements a Form PCT/DO/EO/903 indicating acceptance of the application as a national stage submission under 35 U.S.C. 371 will be issued in addition to the Filing Receipt, in due course.
New International Application Filed with the USPTO as a Receiving Office
If a new international application is being filed and the international application includes the necessary components for an international filing date (see PCT Article 11 and MPEP 1810), a Notification of the International Application Number and of the International Filing Date (Form PCT/RO/105) will be issued in due course, subject to prescriptions concerning national security, and the date shown on this Acknowledgement Receipt will establish the international filing date of the application.

UNITED STATES PATENT AND TRADEMARK OFFICE

UNITED STATES DEPARTMENT OF COMMERCE
United States Patent and Trademark Office
Address: COMMISSIONER FOR PATENTS
P.O. Box 1450
Alexandria, Virginia 22313-1450
www.uspto.gov

APPLICATION NO.	FILING DATE	FIRST NAMED INVENTOR	ATTORNEY DOCKET NO.	CONFIRMATION NO.
14/925,441	10/28/2015	Kendall J. Collie	CET1090.042	1059

26629 7590 01/26/2018
ZIOLKOWSKI PATENT SOLUTIONS GROUP, SC (ZPS)
136 S WISCONSIN ST
PORT WASHINGTON, WI 53074

EXAMINER
TRAN, LONG T

ART UNIT	PAPER NUMBER
3747	

NOTIFICATION DATE	DELIVERY MODE
01/26/2018	ELECTRONIC

Please find below and/or attached an Office communication concerning this application or proceeding.

The time period for reply, if any, is set in the attached communication.

Notice of the Office communication was sent electronically on above-indicated "Notification Date" to the following e-mail address(es):

info@zpspatents.com
sml@zpspatents.com

Office Action Summary	Application No. 14/925,441	Applicant(s) COLLIE ET AL.	
	Examiner LONG T. TRAN	Art Unit 3747	AIA (First Inventor to File) Status Yes

-- The MAILING DATE of this communication appears on the cover sheet with the correspondence address --

Period for Reply

A SHORTENED STATUTORY PERIOD FOR REPLY IS SET TO EXPIRE 3 MONTHS FROM THE MAILING DATE OF THIS COMMUNICATION.

- Extensions of time may be available under the provisions of 37 CFR 1.136(a). In no event, however, may a reply be timely filed after SIX (6) MONTHS from the mailing date of this communication.
- If NO period for reply is specified above, the maximum statutory period will apply and will expire SIX (6) MONTHS from the mailing date of this communication.
- Failure to reply within the set or extended period for reply will, by statute, cause the application to become ABANDONED (35 U.S.C. § 133). Any reply received by the Office later than three months after the mailing date of this communication, even if timely filed, may reduce any earned patent term adjustment. See 37 CFR 1.704(b).

Status

1)☒ Responsive to communication(s) filed on *6 November 2017*.

☐ A declaration(s)/affidavit(s) under **37 CFR 1.130(b)** was/were filed on _____.

2a)☐ This action is **FINAL**. 2b)☒ This action is non-final.

3)☐ An election was made by the applicant in response to a restriction requirement set forth during the interview on _____; the restriction requirement and election have been incorporated into this action.

4)☐ Since this application is in condition for allowance except for formal matters, prosecution as to the merits is closed in accordance with the practice under *Ex parte Quayle*, 1935 C.D. 11, 453 O.G. 213.

Disposition of Claims*

5)☒ Claim(s) *1-63* is/are pending in the application.

5a) Of the above claim(s) _____ is/are withdrawn from consideration.

6)☐ Claim(s) _____ is/are allowed.

7)☒ Claim(s) *1-63* is/are rejected.

8)☐ Claim(s) _____ is/are objected to.

9)☐ Claim(s) _____ are subject to restriction and/or election requirement.

* If any claims have been determined allowable, you may be eligible to benefit from the **Patent Prosecution Highway** program at a participating intellectual property office for the corresponding application. For more information, please see http://www.uspto.gov/patents/init_events/pph/index.jsp or send an inquiry to PPHfeedback@uspto.gov.

Application Papers

10)☐ The specification is objected to by the Examiner.

11)☒ The drawing(s) filed on *28 October 2015* is/are: a)☒ accepted or b)☐ objected to by the Examiner.

Applicant may not request that any objection to the drawing(s) be held in abeyance. See 37 CFR 1.85(a).

Replacement drawing sheet(s) including the correction is required if the drawing(s) is objected to. See 37 CFR 1.121(d).

Priority under 35 U.S.C. § 119

12)☐ Acknowledgment is made of a claim for foreign priority under 35 U.S.C. § 119(a)-(d) or (f).

Certified copies:

a)☐ All b)☐ Some** c)☐ None of the:

1.☐ Certified copies of the priority documents have been received.

2.☐ Certified copies of the priority documents have been received in Application No. _____.

3.☐ Copies of the certified copies of the priority documents have been received in this National Stage application from the International Bureau (PCT Rule 17.2(a)).

** See the attached detailed Office action for a list of the certified copies not received.

Attachment(s)

1) ☒ Notice of References Cited (PTO-892)

2) ☐ Information Disclosure Statement(s) (PTO/SB/08a and/or PTO/SB/08b) Paper No(s)/Mail Date _____.

3) ☐ Interview Summary (PTO-413) Paper No(s)/Mail Date. _____.

4) ☐ Other: _____.

Champion - EX2082, Page 383 of 575
Harbor Freight Tools USA Inc. et al v. Champion Power Equip., Inc.
IPR2025-01121

DETAILED ACTION

1. The present application, filed on or after March 16, 2013, is being examined under the first inventor to file provisions of the AIA.

2. A Petition Decision was entered on December 5, 2017. Claims 19 - 55, 58 - 59, and 62 - 63 have been granted a rejoinder and are now fully considered.

3. The previous Office Action is now withdrawn.

4. Claims 1 - 63 remain pending in the application and have been fully considered.

Claim Rejections - 35 USC § 102

5. In the event the determination of the status of the application as subject to AIA 35 U.S.C. 102 and 103 (or as subject to pre-AIA 35 U.S.C. 102 and 103) is incorrect, any correction of the statutory basis for the rejection will not be considered a new ground of rejection if the prior art relied upon, and the rationale supporting the rejection, would be the same under either status.

6. The following is a quotation of the appropriate paragraphs of 35 U.S.C. 102 that form the basis for the rejections under this section made in this Office action:

> A person shall be entitled to a patent unless –
>
> (a)(2) the claimed invention was described in a patent issued under section 151, or in an application for patent published or deemed published under section 122(b), in which the patent or application, as the case may be, names another inventor and was effectively filed before the effective filing date of the claimed invention.

7. Claims 1, 3 – 4, 12 – 13, 35 - 36 are rejected under 35 U.S.C. 102(a)(2) as being anticipated by Poehlman (US 4,489,699).

<u>Regarding Claim 1:</u>

Poelhman teaches a dual fuel engine comprising: an engine (13) operable on a gaseous fuel and a liquid fuel (Col 3 lines 25 – 36 describes gasoline and natural gas); a switch (51) to change operation of the engine between gaseous fuel and liquid fuel; a carburetor (15) attached to an intake (105) of the engine to mix air and fuel and connect to a gaseous fuel source (27) and a liquid fuel source (21); and a liquid fuel cut-off (41) attached to the carburetor to interrupt liquid fuel upon actuation of the switch from liquid fuel to gaseous fuel.

Regarding Claim 3:

Poelhman teaches the gaseous fuel is LPG and the liquid fuel is gasoline (Col 3 lines 25 – 36).

Regarding Claim 4:

Poelhman teaches a liquid fuel valve (43) along a liquid fuel line (19) coupling the liquid fuel source to the carburetor; and a gaseous fuel valve (45) along a gaseous fuel line (25) coupling the gaseous fuel source to the carburetor.

Regarding Claim 12:

Poelhman teaches the liquid fuel cut-off is manually actuated to interrupt liquid fuel (via switch 51).

Regarding Claim 13:

Poelhman teaches the liquid fuel cut-off actuates to interrupt liquid fuel free from linear motion (via switch 51).

Regarding Claims 35 - 36:

Peolhman teaches a carburetor (15) having a fuel shutoff (via 51) comprising: a carburetor comprising: a float bowl (17), a throat (where throttle 107 resides), a fuel passage (19) to provide fuel from the float bowl to the throat; and a fuel shutoff (43) coupled to the carburetor having a first end in the carburetor that actuates to close the fuel passage and a second end external to the carburetor to actuate the first end (Fig 1 shows valve 43 connected to two ends of the fuel passage); and wherein the fuel shutoff actuates free from linear motion (it rotates).

Claim Rejections - 35 USC § 103

8. In the event the determination of the status of the application as subject to AIA 35 U.S.C. 102 and 103 (or as subject to pre-AIA 35 U.S.C. 102 and 103) is incorrect, any correction of the statutory basis for the rejection will not be considered a new ground of rejection if the prior art relied upon, and the rationale supporting the rejection, would be the same under either status.

9. The following is a quotation of 35 U.S.C. 103 which forms the basis for all obviousness rejections set forth in this Office action:

> A patent for a claimed invention may not be obtained, notwithstanding that the claimed invention is not identically disclosed as set forth in section 102, if the differences between the claimed invention and the prior art are such that the claimed invention as a whole would have been obvious before the effective filing date of the claimed invention to a person having ordinary skill in the art to which the claimed invention pertains. Patentability shall not be negated by the manner in which the invention was made.

10. The factual inquiries set forth in *Graham v. John Deere Co.*, 383 U.S. 1, 148 USPQ 459 (1966), that are applied for establishing a background for determining obviousness under 35 U.S.C. 103 are summarized as follows:

1. Determining the scope and contents of the prior art.

2. Ascertaining the differences between the prior art and the claims at issue.

3. Resolving the level of ordinary skill in the pertinent art.

4. Considering objective evidence present in the application indicating obviousness or nonobviousness.

11. This application currently names joint inventors. In considering patentability of the claims the examiner presumes that the subject matter of the various claims was commonly owned as of the effective filing date of the claimed invention(s) absent any evidence to the contrary. Applicant is advised of the obligation under 37 CFR 1.56 to point out the inventor and effective filing dates of each claim that was not commonly owned as of the effective filing date of the later invention in order for the examiner to consider the applicability of 35 U.S.C. 102(b)(2)(C) for any potential 35 U.S.C. 102(a)(2) prior art against the later invention.

12. Claims 2, 5 – 10, 19 – 20, 30 - 34, 48 - 49, 56 - 57, 60 – 63 are rejected under 35 U.S.C. 103 as being unpatentable over Poelhman (US 4,489,699) in view of Sugimoto et al. (US 2007/0137591).

<u>Regarding Claim 2:</u>

Poelhman teaches all of the claimed limitation except for the engine is a pull start, batteryless engine.

However, Sugimoto et al. teach a similar dual fuel engine (paragraph 0086) comprising a pull start, batteryless engine (via 46) for the purpose of starting the engine.

Therefore, it would have been obvious to one of ordinary skill in the art at the time of the invention to provide the pull start function of Sugimoto et al. in order to start the engine for a portable generator system.

Regarding Claim 5:

Poelhman teaches all of the claimed limitations except for the engine is a pull-start engine having an electrical power generator to supply electrical power.

However, Sugimoto et al. teaches the engine is a pull-start engine (via 46) having an electrical power generator (40) to supply electrical power for the purpose of starting the engine.

Therefore, it would have been obvious to one of ordinary skill in the art at the time of the invention to provide the pull start function of Sugimoto et al. in order to start the engine for a portable generator system.

Regarding Claim 6:

Poelhman teaches the switch is an electro-mechanical switch (51 and via 59) connecting one fuel source to the carburetor; and wherein the liquid fuel cut-off is a solenoid (81, 83) connected to open and close a fuel path.

Poelhman is silent to a pull-start engine having an electrical power generator to supply electrical power.

However, Sugimoto et al. teaches the engine is a pull-start engine (via 46) having an electrical power generator (40) to supply electrical power for the purpose of starting the engine.

Therefore, it would have been obvious to one of ordinary skill in the art at the time of the invention to provide the pull start function of Sugimoto et al. in order to start the engine for a portable generator system.

Regarding Claims 7 – 10, 56 – 57, 60 – 61:

Poelhman teaches all of the claimed limitations except for a power generator.

However, Sugimoto et al. teaches the engine is a pull-start engine (via 46) having an electrical power generator (40) to supply electrical power for the purpose of starting the engine.

Therefore, it would have been obvious to one of ordinary skill in the art at the time of the invention to provide the pull start function of Sugimoto et al. in order to start the engine for a portable generator system.

Regarding Claim 19 - 20, 30 - 34, 48 - 49, 62 - 63:

Sugimoto et al. teaches a batteryless dual fuel generator (paragraph 0086) comprising a housing (4) containing a pull start engine (46, 30) coupled to drive an alternator (40a), the engine operable on a gaseous fuel and a liquid fuel (paragraphs 0085 - 0086 describes a first fuel in liquid phase to gas, and a second gas fuel).

Sugimoto et al. is silent to a carburetor attached to an intake of the engine comprising: a throat to mix fuel with air, a float bowl, a fuel passage to provide liquid fuel from the float bowl to the throat; and a fuel shutoff attached to the

carburetor to close the fuel passage upon selection of engine operation to gaseous fuel.

However, Poelhman teaches a carburetor (15) attached to an intake (105) of the engine comprising: a throat (where throttle 107 resides) to mix fuel with air, a float bowl (17), a fuel passage (19) to provide liquid fuel from the float bowl to the throat; and a fuel shutoff (43) attached to the carburetor to close the fuel passage upon selection of engine operation to gaseous fuel.

Therefore, it would have been obvious to one of ordinary skill in the art at the time of the invention to provide the carburetor of Poelhman in the generator of Poelhman in order to effectively, efficiently, and manually switch between the two fuel based on the user's preference.

13. Claim 11 is rejected under 35 U.S.C. 103 as being unpatentable over Poelhman (US 4,489,699) in view of Sugimoto et al. (US 2007/0137591), and further in view of Satter (US 3,412,258).

Regarding Claim 11:

Modified Poelhman teaches all of the claimed limitations except for the electrical power generator comprises a magneto or an alternator coupled to a voltage regulator to provide a regulated voltage to the solenoid valve.

However, Satter teaches a similar generator comprising a magneto or an alternator (12) coupled to a voltage regulator (via phase A line) to provide a

regulated voltage to the solenoid valve (44) for the purpose of supplying power to the valve.

Therefore it would have been obvious to one of ordinary skill in the art at the time of the invention to provide the alternator of Satter in the engine of modified Poelhman in order to control the voltage while actuating the valve.

14. Claims 14, 15, 44, 50 - 55, 58 - 59 are rejected under 35 U.S.C. 103 as being unpatentable over Poelhman (US 4,489,699) in view of Swanson et al. (US 5,611,312).

Regarding Claim 14:

Poelhman is silent to the liquid fuel cut-off comprises: a rotating shaft extending through an aperture in the carburetor; a fuel seal around the shaft to seal the aperture; and a blocking member coupled to the shaft in the carburetor that rotates between a blocking and a non-blocking position to selectively block a liquid fuel path to the engine.

However, Swanson et al. teaches a liquid fuel cut-off (118) comprising a rotating shaft (58) extending through an aperture in the carburetor (50); a fuel seal (112, 114) around the shaft to seal the aperture; and a blocking member (56) coupled to the shaft in the carburetor that rotates between a blocking and a non-blocking position to selectively block a liquid fuel path to the engine for the purposes of preventing backflow.

Therefore it would have been obvious to one of ordinary skill in the art at the time of the invention to provide the fuel cut-off of Swanson et al. in the engine

of Poelhman in order to prevent fuel backflow and to control the flow of fuel through the carburetor.

Regarding Claim 15, 44, 50 - 595, 58 - 59:

Poelhman is silent to a lever coupled to the shaft outside the carburetor; a spring coupled to the lever to hold the blocking member in either the blocking or non-blocking position; and a cable coupled to the lever to pull against the spring and rotate the blocking member to the other of the blocking or non-blocking positions.

However, Swanson et al. teaches a lever (395) coupled to the shaft outside the carburetor; a spring (397) coupled to the lever to hold the blocking member in either the blocking or non-blocking position; and a cable (400) coupled to the lever to pull against the spring and rotate the blocking member to the other of the blocking or non-blocking positions for the purpose of creating a safety feature.

Therefore it would have been obvious to one of ordinary skill in the art at the time of the invention to provide the fuel cut-off of Swanson et al. in the engine of Poelhman in order to prevent fuel backflow and to control the flow of fuel through the carburetor.

15. Claims 16 – 18 are rejected under 35 U.S.C. 103 as being unpatentable over Poelhman (US 4,489,699) in view of Andersson et al. (US 2010/0258099).

Regarding Claim 16:

Poelhman is silent to the liquid fuel cut-off is magnetically actuated to selectively interrupt liquid fuel.

However, Andersson et al. teaches the liquid fuel cut-off is magnetically (via 77 and 72, paragraph 0111) actuated to selectively interrupt liquid fuel for the purpose of energizing the valve to open and close.

Therefore, it would have been obvious to one of ordinary skill in the art at the time of the invention to provide the magnet of Andersson et al. in the solenoid valve of Poelhman in order to minimize delay with the valve closure.

Regarding Claim 17:

Poelhman is silent to a spring pushing the liquid fuel cut-off to interrupt liquid fuel; and an actuating magnet coupled to the carburetor to selectively pull the liquid fuel cut-off against the spring away from a position interrupting liquid fuel.

However, Andersson et al. teaches a spring (79) pushing the liquid fuel cut-off (18) to interrupt liquid fuel; and an actuating magnet (77 and 72) coupled to the carburetor (12) to selectively pull the liquid fuel cut-off against the spring away from a position interrupting liquid fuel for the purpose of energizing the valve to open and close.

Therefore, it would have been obvious to one of ordinary skill in the art at the time of the invention to provide the magnet of Andersson et al. in the solenoid valve of Poelhman in order to minimize delay with the valve closure.

Regarding Claim 18:

Poelhman is silent to a housing (66) at least partially enclosing the liquid fuel cutoff, the housing including: a first section (64) enclosing a plunger (65) of the liquid fuel cut-off to the carburetor and holding the spring against the plunger; and a second section (74) coupled to the first section and enclosing the actuating magnet for the purpose of energizing the valve to open and close.

Therefore, it would have been obvious to one of ordinary skill in the art at the time of the invention to provide the magnet of Andersson et al. in the solenoid valve of Poelhman in order to minimize delay with the valve closure.

16. Claims 21 - 26 , 37 - 43, 45 - 47 are rejected under 35 U.S.C. 103 as being unpatentable over Sugimoto et al. (US 2007/0137591) and Poelhman (US 4,489,699), and further in view of Swanson et al. (US 5,611,312).

Regarding Claim 21 - 23, 37 - 43, 45 - 47:

Modified Sugimoto et al. is silent to a rotating shaft extending through an opening in the carburetor; and a valve member coupled to the shaft in the carburetor that rotates to control fuel flow into the fuel passage.

However, Swanson et al. teaches a rotating shaft (58) extending through an opening in the carburetor (50); and a valve member (395) coupled to the shaft in the carburetor that rotates to control fuel flow into the fuel passage.

Therefore it would have been obvious to one of ordinary skill in the art at the time of the invention to provide the fuel cut-off of Swanson et al. in the engine

of modified Sugimoto et al. in order to prevent fuel backflow and to control the flow of fuel through the carburetor.

Regarding Claim 24:

Modified Sugimoto et al. is silent to a compression spring on the shaft in the carburetor pushing the valve member to close the fuel passage; and a plug in the opening surrounding the shaft to hold the compression spring against the valve member.

However, Swanson et al. teaches a compression spring (82) on the shaft in the carburetor pushing the valve member to close the fuel passage; and a plug (368') in the opening surrounding the shaft to hold the compression spring against the valve member.

Therefore it would have been obvious to one of ordinary skill in the art at the time of the invention to provide the fuel cut-off of Swanson et al. in the engine of modified Sugimoto et al. in order to prevent fuel backflow and to control the flow of fuel through the carburetor.

Regarding Claims 25 and 26:

Modified Sugimoto et al. is silent to a lever coupled to the shaft outside the carburetor; and a cable coupled to the lever to actuate the valve member to open and close the fuel passage.

However, Swanson et al. teaches a lever (395) coupled to the shaft outside the carburetor; and a cable (400) coupled to the lever to actuate the valve member to open and close the fuel passage.

Therefore it would have been obvious to one of ordinary skill in the art at the time of the invention to provide the fuel cut-off of Swanson et al. in the engine of modified Sugimoto et al. in order to prevent fuel backflow and to control the flow of fuel through the carburetor.

17. Claims 27 - 29 are rejected under 35 U.S.C. 103 as being unpatentable over Sugimoto et al. (US 2007/0137591) and Poelhman (US 4,489,699), and further in view of Andersson et al. (US 2010/0258099).

Regarding Claims 27 - 29:

Modified Sugimoto et al. is silent to the fuel shutoff is magnetically actuated to selectively close the fuel passage, controlled by a manually actuated magnet coupled to the carburetor.

However, Andersson et al. teaches a spring (79) pushing the liquid fuel cut-off (18) to interrupt liquid fuel; and an actuating magnet (77 and 72) coupled to the carburetor (12) to selectively pull the liquid fuel cut-off against the spring away from a position interrupting liquid fuel for the purpose of energizing the valve to open and close.

Therefore, it would have been obvious to one of ordinary skill in the art at the time of the invention to provide the magnet of Andersson et al. in the solenoid valve of modified Sugimoto et al. in order to minimize delay with the valve closure.

Conclusion

18. The prior art made of record and not relied upon is considered pertinent to applicant's disclosure.

19. Any inquiry concerning this communication or earlier communications from the examiner should be directed to LONG T. TRAN whose telephone number is (571)270-1899. The examiner can normally be reached on M-F, 7:30am - 5:00pm.

Examiner interviews are available via telephone, in-person, and video conferencing using a USPTO supplied web-based collaboration tool. To schedule an interview, applicant is encouraged to use the USPTO Automated Interview Request (AIR) at http://www.uspto.gov/interviewpractice.

If attempts to reach the examiner by telephone are unsuccessful, the examiner's supervisor, Lindsay Low can be reached on 571-272-1196. The fax phone number for the organization where this application or proceeding is assigned is 571-273-8300.

Information regarding the status of an application may be obtained from the Patent Application Information Retrieval (PAIR) system. Status information for published applications may be obtained from either Private PAIR or Public PAIR. Status information for unpublished applications is available through Private PAIR only. For more information about the PAIR system, see http://pair-direct.uspto.gov. Should you have questions on access to the Private PAIR system, contact the Electronic Business Center (EBC) at 866-217-9197 (toll-free). If you would like assistance from a USPTO Customer Service Representative or access to the automated information system, call 800-786-9199 (IN USA OR CANADA) or 571-272-1000.

/LONG T TRAN/
Examiner, Art Unit 3747

Notice of References Cited	Application/Control No. 14/925,441	Applicant(s)/Patent Under Reexamination COLLIE ET AL.	
	Examiner LONG T. TRAN	Art Unit 3747	Page 1 of 1

U.S. PATENT DOCUMENTS

*		Document Number Country Code-Number-Kind Code	Date MM-YYYY	Name	CPC Classification	US Classification
*	A	US-2015/0122230 A1	05-2015	Sarder; Mark J.	F02D19/0647	123/525
*	B	US-2011/0253102 A1	10-2011	Watanabe; Tsuyoshi	F02D41/064	123/438
*	C	US-2010/0258099 A1	10-2010	Andersson; Martin N.	F02D31/006	123/676
*	D	US-2007/0137591 A1	06-2007	Sugimoto; Yasuhiro	F02B43/00	123/41.7
*	E	US-6,591,817 B2	07-2003	Deutsch; Robert W.	F02D19/0647	123/525
*	F	US-2002/0134362 A1	09-2002	Deutsch, Robert W.	F02D19/0647	123/575
*	G	US-5,611,312 A	03-1997	Swanson; Mark S.	F02M1/02	123/179.18
*	H	US-4,489,699 A	12-1984	Poehlman; Arthur G.	F02B69/04	123/525
*	I	US-3,783,849 A	01-1974	Bramfitt; Thomas Hugh	F02M13/06	123/179.16
*	J	US-3,718,000 A	02-1973	Walker; Brooks	F02B11/02	123/525
*	K	US-3,659,574 A	05-1972	Reschke; Albert H.	F02M13/08	123/525
*	L	US-3,412,258 A	11-1968	WILLIAM SATTER HARVEY	H02P9/42	290/40R
	M	US-				

FOREIGN PATENT DOCUMENTS

*		Document Number Country Code-Number-Kind Code	Date MM-YYYY	Country	Name	CPC Classification
	N					
	O					
	P					
	Q					
	R					
	S					
	T					

NON-PATENT DOCUMENTS

*		Include as applicable: Author, Title Date, Publisher, Edition or Volume, Pertinent Pages)
	U	
	V	
	W	
	X	

*A copy of this reference is not being furnished with this Office action. (See MPEP § 707.05(a).)
Dates in MM-YYYY format are publication dates. Classifications may be US or foreign.

Search Notes	Application/Control No.	Applicant(s)/Patent Under Reexamination
	14925441	COLLIE ET AL.
	Examiner	**Art Unit**
	LONG T TRAN	3747

CPC- SEARCHED

Symbol	Date	Examiner
F02D19/0647; F02D19/0613; F02D29/06; F02D41/0025; F02D11/02; F02D19/0642; F02D35/0053; F02B63/04; F02B43/00; F02B63/044; F02M13/08; F02M19/08; F02M21/047; F02N3/02	8/2/2017	LT

CPC COMBINATION SETS - SEARCHED

Symbol	Date	Examiner

US CLASSIFICATION SEARCHED

Class	Subclass	Date	Examiner

* See search history printout included with this form or the SEARCH NOTES box below to determine the scope of the search.

SEARCH NOTES

Search Notes	Date	Examiner
Inventor search	8/2/2017	LT
PLUS search	8/2/2017	LT
Forward and backward citation	8/2/2017	LT
Text search	8/2/2017	LT
Updated text search	1/22/2018	LT

INTERFERENCE SEARCH

US Class/ CPC Symbol	US Subclass / CPC Group	Date	Examiner

Champion - EX2082, Page 400 of 575
Harbor Freight Tools USA Inc. et al v. Champion Power Equip., Inc.
IPR2025-01121

Index of Claims	Application/Control No.	Applicant(s)/Patent Under Reexamination
	14925441	COLLIE ET AL.
	Examiner	**Art Unit**
	LONG T TRAN	3747

✓	Rejected	-	Cancelled	N	Non-Elected	A	Appeal
=	Allowed	÷	Restricted	I	Interference	O	Objected

☐ Claims renumbered in the same order as presented by applicant ☐ CPA ☐ T.D. ☐ R.1.47

CLAIM		DATE								
Final	Original	04/18/2017	08/02/2017	01/22/2018						
	1	÷	✓	✓						
	2	÷	✓	✓						
	3	÷	✓	✓						
	4	÷	✓	✓						
	5	÷	✓	✓						
	6	÷	✓	✓						
	7	÷	✓	✓						
	8	÷	✓	✓						
	9	÷	✓	✓						
	10	÷	✓	✓						
	11	÷	✓	✓						
	12	÷	✓	✓						
	13	÷	✓	✓						
	14	÷	✓	✓						
	15	÷	✓	✓						
	16	÷	✓	✓						
	17	÷	✓	✓						
	18	÷	✓	✓						
	19	÷	N	✓						
	20	÷	N	✓						
	21	÷	N	✓						
	22	÷	N	✓						
	23	÷	N	✓						
	24	÷	N	✓						
	25	÷	N	✓						
	26	÷	N	✓						
	27	÷	N	✓						
	28	÷	N	✓						
	29	÷	N	✓						
	30	÷	N	✓						
	31	÷	N	✓						
	32	÷	N	✓						
	33	÷	N	✓						
	34	÷	N	✓						
	35	÷	N	✓						
	36	÷	N	✓						

Index of Claims	Application/Control No.	Applicant(s)/Patent Under Reexamination
	14925441	COLLIE ET AL.
	Examiner	**Art Unit**
	LONG T TRAN	3747

✓	Rejected	-	Cancelled	N	Non-Elected	A	Appeal
=	Allowed	÷	Restricted	I	Interference	O	Objected

☐ Claims renumbered in the same order as presented by applicant ☐ CPA ☐ T.D. ☐ R.1.47

CLAIM		DATE								
Final	Original	04/18/2017	08/02/2017	01/22/2018						
	37	÷	N	✓						
	38	÷	N	✓						
	39	÷	N	✓						
	40	÷	N	✓						
	41	÷	N	✓						
	42	÷	N	✓						
	43	÷	N	✓						
	44	÷	N	✓						
	45	÷	N	✓						
	46	÷	N	✓						
	47	÷	N	✓						
	48	÷	N	✓						
	49	÷	N	✓						
	50	÷	N	✓						
	51	÷	N	✓						
	52	÷	N	✓						
	53	÷	N	✓						
	54	÷	N	✓						
	55	÷	N	✓						
	56	÷	✓	✓						
	57	÷	✓	✓						
	58	÷	N	✓						
	59	÷	N	✓						
	60	÷	✓	✓						
	61	÷	✓	✓						
	62	÷	N	✓						
	63	÷	N	✓						

EAST Search History

EAST Search History (Prior Art)

Ref #	Hits	Search Query	DBs	Default Operator	Plurals	Time Stamp
L1	1481	engine and ((dual double two second$4 plural$4 multi multiple bi pair supplement$4) near2 fuel same (switch$4 chang$3)) and (valve same (carburetor carburretor) same fuel)	US-PGPUB; USPAT; USOCR; FPRS; EPO; JPO; DERWENT; IBM_TDB	OR	ON	2018/01/22 12:53
L2	519	engine and ((dual double two second$4 plural$4 multi multiple bi pair supplement$4) near2 fuel same (switch$4 chang$3)) and (valve same (carburetor carburretor) same fuel) and generat$4	US-PGPUB; USPAT; USOCR; FPRS; EPO; JPO; DERWENT; IBM_TDB	OR	ON	2018/01/22 12:54

1/22/2018 1:00:21 PM
C:\Users\ltran2\Documents\EAST\Workspaces\14925441.wsp

UNITED STATES PATENT AND TRADEMARK OFFICE

UNITED STATES DEPARTMENT OF COMMERCE
United States Patent and Trademark Office
Address: COMMISSIONER FOR PATENTS
P.O. Box 1450
Alexandria, Virginia 22313-1450
www.uspto.gov

APPLICATION NO.	FILING DATE	FIRST NAMED INVENTOR	ATTORNEY DOCKET NO.	CONFIRMATION NO.
14/925,441	10/28/2015	Kendall J. Collie	CET1090.042	1059

26629 7590 12/05/2017
ZIOLKOWSKI PATENT SOLUTIONS GROUP, SC (ZPS)
136 S WISCONSIN ST
PORT WASHINGTON, WI 53074

EXAMINER
TRAN, LONG T

ART UNIT	PAPER NUMBER
3747	

NOTIFICATION DATE	DELIVERY MODE
12/05/2017	ELECTRONIC

Please find below and/or attached an Office communication concerning this application or proceeding.

The time period for reply, if any, is set in the attached communication.

Notice of the Office communication was sent electronically on above-indicated "Notification Date" to the following e-mail address(es):

info@zpspatents.com
sml@zpspatents.com

UNITED STATES PATENT AND TRADEMARK OFFICE

Commissioner for Patents
United States Patent and Trademark Office
P.O. Box 1450
Alexandria, VA 22313-1450
www.uspto.gov

ZIOLKOWSKI PATENT SOLUTIONS GROUP, SC (ZPS)
136 S WISCONSIN ST
PORT WASHINGTON WI 53074

In re Application of: Collie et al.	:	
Appl. No.: 14/925,441	:	DECISION ON PETITION TO
Filed: October 28, 2015	:	REVIEW RESTRICITON
Attorney Docket No.: CET1090.042	:	REQUIREMENT UNDER
For: BATTERYLESS DUAL FUEL ENGINE WITH LIQUID FUEL CUT-OFF	:	37 CFR 1.144

This is a decision on the petition filed on November 6, 2017 in which petitioner requests reconsideration and withdrawal of restriction requirement mailed in the April 21, 2017 Office action. Petitioner requests rejoinder of claims 19-55, 58-59 and 62-63. The petition is being considered pursuant to 37 CFR 1.181 and CFR 1.144 and no fee is required for the petition.

The petition is **granted**.

After consulting with the Examiner, the requested relief is granted. The restriction requirement mailed on April 21, 2017 is hereby withdrawn. Petitioner's amendment filed on November 6, 2017 has been entered into the application. The examiner will issue an Office Action to rejoin and treat withdrawn claims 19-55, 58-59 and 62-63 on their merits.

The application is being forwarded to the examiner via the Supervisory Patent Examiner of Art Unit 3747 for preparation of an Office Action consistent with this decision in due course.

Any inquiry regarding this decision should be directed to Julie Brocketti, Quality Assurance Specialist, at (571) 272-0206.

PETITION GRANTED.

Cheryl Tyler, Director
Technology Center 3700

Customer No. 26629
Confirmation No. 1059

Patent
Attorney Docket No. CET1090.042

IN THE UNITED STATES PATENT AND TRADEMARK OFFICE

In re Application of	:	Collie et al.
Serial No.	:	14/925,441
Filed	:	October 28, 2015
For	:	BATTERYLESS DUAL FUEL ENGINE WITH LIQUID FUEL CUT-OFF
Group Art No.	:	3747
Examiner	:	Long T. Tran

CERTIFICATION UNDER 37 CFR 1.8(a) and 1.10

I hereby certify that, on the date shown below, this correspondence is being:

Mailing

☐ deposited with the US Postal Service in an envelope addressed to Commissioner for Patents, P.O. Box 1450, Alexandria, VA 22313-1450

37 CFR 1.8(a)
☐ with sufficient postage as first class mail

37 CFR 1.10
☐ As "Express Mail Post Office to Addressee" Mailing Label No.

Transmission

☐ transmitted by facsimile to Fax No.: 571-273-8300 addressed to **Examiner Long T. Tran** at the Patent and Trademark Office.

■ transmitted by EFS-WEB addressed to **Examiner Long T. Tran** at the Patent and Trademark Office.

Date: November 6, 2017

/Robyn L. Templin/
Signature

Commissioner for Patents
P.O. Box 1450
Alexandria, VA 22313-1450

RESPONSE TO OFFICE ACTION
MAILED AUGUST 7, 2017

Dear Sir:

Responsive to the Office Action mailed August 7, 2017, please consider the following remarks:

Electronic Acknowledgement Receipt

EFS ID:	30862885
Application Number:	14925441
International Application Number:	
Confirmation Number:	1059
Title of Invention:	BATTERYLESS DUAL FUEL ENGINE WITH LIQUID FUEL CUT-OFF
First Named Inventor/Applicant Name:	Kendall J. Collie
Customer Number:	26629
Filer:	Timothy J. Ziolkowski/Robyn Templin
Filer Authorized By:	Timothy J. Ziolkowski
Attorney Docket Number:	CET1090.042
Receipt Date:	06-NOV-2017
Filing Date:	28-OCT-2015
Time Stamp:	14:05:18
Application Type:	Utility under 35 USC 111(a)

Payment information:

Submitted with Payment	no

File Listing:

Document Number	Document Description	File Name	File Size(Bytes)/ Message Digest	Multi Part /.zip	Pages (if appl.)
1		Response.pdf	169034 75865ac726109290b262721ee3b4f93cd03ab2ae	yes	16

	Multipart Description/PDF files in .zip description		
	Document Description	**Start**	**End**
	Applicant Arguments/Remarks Made in an Amendment	12	16
	Claims	2	11
	Amendment/Req. Reconsideration-After Non-Final Reject	1	1

Warnings:

Information:

Total Files Size (in bytes):	169034

This Acknowledgement Receipt evidences receipt on the noted date by the USPTO of the indicated documents, characterized by the applicant, and including page counts, where applicable. It serves as evidence of receipt similar to a Post Card, as described in MPEP 503.

New Applications Under 35 U.S.C. 111
If a new application is being filed and the application includes the necessary components for a filing date (see 37 CFR 1.53(b)-(d) and MPEP 506), a Filing Receipt (37 CFR 1.54) will be issued in due course and the date shown on this Acknowledgement Receipt will establish the filing date of the application.
National Stage of an International Application under 35 U.S.C. 371
If a timely submission to enter the national stage of an international application is compliant with the conditions of 35 U.S.C. 371 and other applicable requirements a Form PCT/DO/EO/903 indicating acceptance of the application as a national stage submission under 35 U.S.C. 371 will be issued in addition to the Filing Receipt, in due course.
New International Application Filed with the USPTO as a Receiving Office
If a new international application is being filed and the international application includes the necessary components for an international filing date (see PCT Article 11 and MPEP 1810), a Notification of the International Application Number and of the International Filing Date (Form PCT/RO/105) will be issued in due course, subject to prescriptions concerning national security, and the date shown on this Acknowledgement Receipt will establish the international filing date of the application.

REMARKS

Claims 1-63 are pending in the present application. In the Office Action mailed August 7, 2017, the Examiner rejected claims 1, 3, 4, 12, and 13 under 35 U.S.C. §102(a)(2) as being anticipated by Poehlman (USP 4,489,699). The Examiner next rejected claims 2, 5-10, 56, 57, 60, and 61 under 35 U.S.C. §103 as being unpatentable over Poehlman in view of Sugimoto et al. (US Pub. 2007/0137591). Claim 11 was rejected under 35 U.S.C. §103 as being unpatentable over Poehlman in view of Sugimoto et al. and further in view of Satter (USP 3,412,258). Claims 14 and 15 were rejected under 35 U.S.C. §103 as being unpatentable over Poehlman in view of Swanson et al. (USP 5,611,312). Claims 16-18 were rejected under 35 U.S.C. §103 as being unpatentable over Poehlman in view of Andersson et al. (US Pub. 2010/0258099).

Claims 19-55, 58, 59, 62, and 63 have been withdrawn from consideration by the Examiner.

Election/Restriction

In the Office Action mailed August 7, 2017, the Examiner made final the Requirement for Restriction of Inventions I, II, III, and IV. The Examiner withdrew claims 19-55, 58-59, 62-63 from consideration as being drawn to a non-elected invention but did not provide any further support for the restriction. *See Office Action*, 08/07/2017, p. 2.

Applicant respectfully requests reconsideration of the Restriction. As set forth in detail in the Request for Supervisory Review of the Restriction Requirement, filed concurrently herewith, the Examiner has not met the burdens set forth by MPEP § 806.05(j) to show that alleged Inventions I-IV, as claimed, are distinct. Therefore, Applicant respectfully requests reconsideration and withdrawal of the restriction of Inventions I, II, III, and IV, and requests rejoinder of all claims.

Rejection under 35 U.S.C. §102(a)(2) as being anticipated by Poehlman

Claim 1

The Examiner rejected independent claim 1 under 35 U.S.C. §102(a)(2) as being anticipated by Poehlman. In rejecting claim 1, the Examiner stated that:

> Poelhman teaches a dual fuel engine comprising: an engine (13) operable on a gaseous fuel and a liquid fuel (Col 3 lines 25 - 36 describes gasoline and natural gas); a switch (51) to change operation of the engine between gaseous fuel and liquid fuel; a carburetor (15) attached to an intake (105) of the engine to mix air and fuel and connect to a gaseous fuel source (27) and a liquid fuel source (21);

Champion - EX2082, Page 409 of 575
Harbor Freight Tools USA Inc. et al v. Champion Power Equip., Inc.
IPR2025-01121

> and a liquid fuel cut-off (41) attached to the carburetor to interrupt liquid fuel upon actuation of the switch from liquid fuel to gaseous fuel.

Office Action, 08/07/2017, p. 2-3. Applicant respectfully disagrees with the rejection.

Poehlman shows in FIG. 1 a "control apparatus 11 for selectively operating an internal combustion engine 13 on a first or gaseous fuel and on a second or liquid fuel. The engine includes a carburetor 15 incorporating a float bowl 17 which is connected through a supply line 19 with a source 21 of liquid fuel, such as, for instance, gasoline." *Poehlman*, col. 3, lns. 25-31. The engine 13 "includes control means 41 for selective change-over between use of liquid fuel and gaseous fuel. In this regard, the control means 41 includes a liquid fuel control valve 43." *Id.* at col. 3, lns. 63-65. The "control means 41 includes a vacuum control switch 47 which is subject to variation in the amount of vacuum, which is normally closed, and which opens in response to the presence at the vacuum switch 47 of an amount of vacuum above a predetermined amount." *Id.* at col. 4, lns. 10-15. The "control means 41 includes a primary or fuel selector switch 51." *Id.* at col. 4, lns. 16-17. Regarding fuel changeover, Poehlman further discloses:

> In operation, when switching from liquid fuel to gaseous fuel, the operator moves the fuel selector switch 51 to the gaseous fuel position. As a result, the liquid fuel control valve 43 is consequently deenergized and turns off the liquid fuel supply to the carburetor 15. However, the engine continues to run on the liquid fuel in the carburetor bowl 17. The inlet manifold vacuum remains above the predetermined level of the vacuum switch 47 at idle or normal road speeds until the engine begins to run out of the liquid fuel in the fuel bowl 17. The vacuum then drops to an amount less than or below the predetermined level thereby closing the vacuum switch 47 which energizes the solenoid coils 81 and 83. The first solenoid coil 81 acts to displace the first switch member 65 to the terminal 63, thereby energizing the gaseous fuel control valve 45 to the open position, and thereby also energizing the spark advance means 31 and the inlet air heating means 33.

Id. at col. 6, lns. 21-38.

Claim 1 calls for, in part, an engine operable on a gaseous fuel and a liquid fuel, a switch to change operation of the engine between gaseous fuel and liquid fuel, a carburetor attached to an intake of the engine to mix air and fuel and connect to a gaseous fuel source and a liquid fuel source, and a liquid fuel cut-off attached to the carburetor to interrupt liquid fuel upon actuation of the switch from liquid fuel to gaseous fuel.

Contrary to the Examiner's assertion, Poehlman does not disclose that control means 41 is a "liquid fuel cut-off (41) attached to the carburetor to interrupt liquid fuel upon actuation of the switch from liquid fuel to gaseous fuel." *See Office Action*, p. 2-3. Claim 1 calls for a liquid fuel cut-off in addition to a switch to change operation of the engine between gaseous fuel and

Champion - EX2082, Page 410 of 575
Harbor Freight Tools USA Inc. et al v. Champion Power Equip., Inc.
IPR2025-01121

liquid fuel. While the Examiner referred to control means 41 as "liquid fuel cut-off (41)," the examiner also referred to the fuel selector switch 51 as "a switch (51) to change operation of the engine between gaseous fuel and liquid fuel." *Id.* However, Poehlman discloses that control means 41 includes fuel selector switch 51 (*Poehlman*, col. 4, lns. 16-17), and shows fuel selector switch 51 as part of a control means 41 schematic in FIG. 1. The Examiner's reference to the control means 41 schematic fails to identify both the liquid fuel cut-off and the switch of claim 1.

Notwithstanding the aforementioned deficiencies in the rejection, Poehlman also does not disclose a liquid fuel cut-off attached to the carburetor to interrupt liquid fuel upon actuation of the switch from liquid fuel to gaseous fuel, as called for in claim 1. For instance, the present Application describes one embodiment where a "[l]iquid fuel cut-off 72 couples to carburetor 62 to control liquid fuel flow downstream of float bowl 104 in the carburetor." *Specification*, ¶ [0064]. In contrast, Poehlman discloses liquid fuel control valve 43 coupled to a liquid fuel supply line 19 upstream of a fuel bowl 17. *Poehlman*, FIG. 1. Since the liquid fuel control valve 43 is located upstream of the fuel bowl 17, the engine 13 would continue to run on liquid fuel from the fuel bowl 17 after closure of the liquid fuel control valve 43. As such, the liquid fuel control valve 43 has not been shown to interrupt liquid fuel to the engine 13 upon actuation of the fuel selector switch 51 from liquid fuel to gaseous fuel.

Further, the liquid fuel control valve 43 does not interrupt liquid fuel upon actuation of the fuel selector switch 51 in part because fuel changeover occurs when the vacuum switch 47 is actuated. That is, when the operator moves the fuel selector switch 51 to the gaseous fuel position, the liquid fuel control valve 43 turns off but the engine 13 continues to run on the liquid fuel in the carburetor bowl 17. *Id.* at col. 6, lns. 21-27. Once the engine 13 begins to run out of the liquid fuel in the carburetor bowl 17, vacuum conditions drop to an amount less than a predetermined level thereby closing vacuum switch 47, which then causes the gaseous fuel control valve 45 to open. *Id.* at col. 6, lns. 27-36. Accordingly, Poehlman relies upon vacuum switch 47 to effectuate fuel changeover when the fuel bowl 17 empties, rather than the liquid fuel control valve 43 interrupting liquid fuel to the engine 13 upon actuation of the fuel selector switch 51.

Since Poehlman's engine 13 relies upon vacuum conditions to effectuate fuel changeover, the liquid fuel control valve 43 is located upstream from the carburetor 15 and does not function to trap fuel in the fuel bowl 17 for startup or fuel changeover. That is, the present Application describes one embodiment where "[l]iquid fuel cut-off 72 also traps fuel in float bowl 104 to eliminate delay in filling the bowl when starting the engine on liquid fuel, and can stop liquid fuel

Champion - EX2082, Page 411 of 575
Harbor Freight Tools USA Inc. et al v. Champion Power Equip., Inc.
IPR2025-01121

flow to the engine immediately after ignition shutdown." *Specification*, ¶ [0064]. In contrast, Poehlman's liquid fuel control valve 43 has not been shown to eliminate delay in filling the fuel bowl 17 when starting the engine 13 on liquid fuel, or stop liquid fuel flow to the engine 13 immediately after ignition shutdown. Since the liquid fuel control valve 43 is not coupled to trap fuel in the fuel bowl 17, the Examiner has not shown that the liquid fuel control valve 43 can interrupt liquid fuel from the float bowl 17 upon actuation of the fuel selector switch 51. Accordingly, the Examiner has not shown that Poehlman discloses a liquid fuel cut-off attached to the carburetor to interrupt liquid fuel upon actuation of the switch from liquid fuel to gaseous fuel, as called for in claim 1.

Accordingly, Poehlman does not teach or suggest each and every element of claim 1. The subject matter of claim 1 is patentably distinct from the art of record. Applicant respectfully requests the withdrawal of the rejection of claim 1 under 35 U.S.C. §102(a)(2), as well as all claims depending therefrom.

Therefore, in light of at least the foregoing, Applicant respectfully believes that the present application is in condition for allowance. As a result, Applicant respectfully requests timely issuance of a Notice of Allowance for claims 1-63.

Applicant appreciates the Examiner's consideration of these Amendments and Remarks and cordially invites the Examiner to call the undersigned, should the Examiner consider any matters unresolved.

Respectfully submitted,

/Timothy J. Ziolkowski/

Timothy J. Ziolkowski
Registration No. 38,368
Direct Dial 262-268-8181
tjz@zpspatents.com

Dated: November 6, 2017
Attorney Docket No.: CET1090.042

P.O. ADDRESS:
Ziolkowski Patent Solutions Group, SC
136 South Wisconsin Street
Port Washington, WI 53074
262-268-8100

Champion - EX2082, Page 412 of 575
Harbor Freight Tools USA Inc. et al v. Champion Power Equip., Inc.
IPR2025-01121

General Authorization and Extension of Time

The Commissioner is hereby authorized to charge any additional fees which may be required regarding this application under 37 C.F.R. §§ 1.16-1.17, or credit any overpayment, to Deposit Account No. 50-2623. Should no proper payment be enclosed herewith, as by credit card authorization being in the wrong amount, unsigned, post-dated, otherwise improper or informal or even entirely missing, the Commissioner is authorized to charge the unpaid amount to Deposit Account No. 50-2623. If any extensions of time are needed for timely acceptance of papers submitted herewith, Applicant hereby petitions for such extensions under 37 C.F.R. §1.136 and authorizes payment of any such extensions fees to Deposit Account No. 50-2623. Please consider this a general authorization to charge any fee that is due in this case, if not otherwise timely paid, to Deposit Account No. 50-2623.

/Timothy J. Ziolkowski/

Timothy J. Ziolkowski
Registration No. 38,368
Direct Dial 262-268-8181
tjz@zpspatents.com

Dated: November 6, 2017
Attorney Docket No.: CET1090.042

P.O. ADDRESS:
Ziolkowski Patent Solutions Group, SC
136 South Wisconsin Street
Port Washington, WI 53074
262-268-8100

Champion - EX2082, Page 413 of 575
Harbor Freight Tools USA Inc. et al v. Champion Power Equip., Inc.
IPR2025-01121

In the Claims

1. (Original) A dual fuel engine comprising:

an engine operable on a gaseous fuel and a liquid fuel;

a switch to change operation of the engine between gaseous fuel and liquid fuel;

a carburetor attached to an intake of the engine to mix air and fuel and connect to a gaseous fuel source and a liquid fuel source; and

a liquid fuel cut-off attached to the carburetor to interrupt liquid fuel upon actuation of the switch from liquid fuel to gaseous fuel.

2. (Original) The dual fuel engine of claim 1, wherein the engine is a pull start, batteryless engine.

3. (Original) The dual fuel engine of claim 1, wherein the gaseous fuel is LPG and the liquid fuel is gasoline.

4. (Original) The dual fuel engine of claim 1 further comprising:

a liquid fuel valve along a liquid fuel line coupling the liquid fuel source to the carburetor; and

a gaseous fuel valve along a gaseous fuel line coupling the gaseous fuel source to the carburetor.

5. (Original) The dual fuel engine of claim 1, wherein the engine is a pull-start engine having an electrical power generator to supply electrical power.

6. (Original) The dual fuel engine of claim 5, wherein the switch is an electro-mechanical switch connecting one fuel source to the carburetor and connected to the electrical power generator; and

wherein the liquid fuel cut-off is a solenoid connected to open and close a fuel path to the pull-start engine in response to reception of electrical power from the switch.

7. (Original) The dual fuel engine of claim 5, wherein the liquid fuel cut-off is a solenoid valve powered by the electrical power generator.

Champion - EX2082, Page 414 of 575
Harbor Freight Tools USA Inc. et al v. Champion Power Equip., Inc.
IPR2025-01121

8. (Original) The dual fuel engine of claim 7, wherein the switch selectively powers the solenoid valve by controlling electrical connection between the solenoid valve and the electrical power generator.

9. (Original) The dual fuel engine of claim 7, wherein the solenoid valve is normally open to provide liquid fuel to the engine when the solenoid valve is unpowered.

10. (Original) The dual fuel engine of claim 9, wherein a pull-starter drives the electrical power generator to power and close the solenoid valve while starting the engine on gaseous fuel.

11. (Original) The dual fuel engine of claim 7, wherein the electrical power generator comprises a magneto or an alternator coupled to a voltage regulator to provide a regulated voltage to the solenoid valve.

12. (Original) The dual fuel engine of claim 1, wherein the liquid fuel cut-off is manually actuated to interrupt liquid fuel.

13. (Original) The dual fuel engine of claim 1, wherein the liquid fuel cut-off actuates to interrupt liquid fuel free from linear motion.

14. (Original) The dual fuel engine of claim 1, wherein the liquid fuel cut-off comprises:

a rotating shaft extending through an aperture in the carburetor;

a fuel seal around the shaft to seal the aperture; and

a blocking member coupled to the shaft in the carburetor that rotates between a blocking and a non-blocking position to selectively block a liquid fuel path to the engine.

15. (Original) The dual fuel engine of claim 14 further comprising:

a lever coupled to the shaft outside the carburetor;

a spring coupled to the lever to hold the blocking member in either the blocking or non-blocking position; and

Champion - EX2082, Page 415 of 575
Harbor Freight Tools USA Inc. et al v. Champion Power Equip., Inc.
IPR2025-01121

a cable coupled to the lever to pull against the spring and rotate the blocking member to the other of the blocking or non-blocking positions.

16. (Original) The dual fuel engine of claim 1, wherein the liquid fuel cut-off is magnetically actuated to selectively interrupt liquid fuel.

17. (Original) The dual fuel engine of claim 1 further comprising:

a spring pushing the liquid fuel cut-off to interrupt liquid fuel; and

an actuating magnet coupled to the carburetor to selectively pull the liquid fuel cut-off against the spring away from a position interrupting liquid fuel.

18. (Original) The dual fuel engine of claim 17 further comprising a housing at least partially enclosing the liquid fuel cutoff, the housing including:

a first section enclosing a plunger of the liquid fuel cut-off to the carburetor and holding the spring against the plunger; and

a second section coupled to the first section and enclosing the actuating magnet.

19. (Withdrawn) A batteryless dual fuel generator comprising:

a housing containing a pull start engine coupled to drive an alternator, the engine operable on a gaseous fuel and a liquid fuel;

a carburetor attached to an intake of the engine comprising:

a throat to mix fuel with air,

a float bowl,

a fuel passage to provide liquid fuel from the float bowl to the throat; and

a fuel shutoff attached to the carburetor to close the fuel passage upon selection of engine operation to gaseous fuel.

20. (Withdrawn) The batteryless dual fuel generator of claim 19, wherein the fuel shutoff actuates to close the fuel passage free from linear motion.

21. (Withdrawn) The batteryless dual fuel generator of claim 19, wherein the fuel shutoff comprises:

a rotating shaft extending through an opening in the carburetor; and

Champion - EX2082, Page 416 of 575
Harbor Freight Tools USA Inc. et al v. Champion Power Equip., Inc.
IPR2025-01121

a valve member coupled to the shaft in the carburetor that rotates to control fuel flow into the fuel passage.

22. (Withdrawn) The batteryless dual fuel generator of claim 21, wherein the valve member is positioned in the float bowl and the shaft extends substantially horizontal through the opening.

23. (Withdrawn) The batteryless dual fuel generator of claim 21, wherein the valve member has a flow passage that aligns with the fuel passage to control fuel flow into the fuel passage.

24. (Withdrawn) The batteryless dual fuel generator of claim 21 further comprising:

a compression spring on the shaft in the carburetor pushing the valve member to close the fuel passage; and

a plug in the opening surrounding the shaft to hold the compression spring against the valve member.

25. (Withdrawn) The batteryless dual fuel generator of claim 24 further comprising:

a lever coupled to the shaft outside the carburetor; and

a cable coupled to the lever to actuate the valve member to open and close the fuel passage.

26. (Withdrawn) The batteryless dual fuel generator of claim 24 further comprising one or more fuel seals within the plug to seal around the shaft.

27. (Withdrawn) The batteryless dual fuel generator of claim 19, wherein the fuel shutoff is magnetically actuated to selectively close the fuel passage, controlled by a manually actuated magnet coupled to the carburetor.

28. (Withdrawn) The batteryless dual fuel generator of claim 19 further comprising:

a spring pushing the fuel shutoff to close the fuel passage; and

an actuating magnet coupled to the carburetor to selectively pull the fuel shutoff against the spring to open the fuel passage.

Champion - EX2082, Page 417 of 575
Harbor Freight Tools USA Inc. et al v. Champion Power Equip., Inc.
IPR2025-01121

29. (Withdrawn) The batteryless dual fuel generator of claim 28 further comprising a housing at least partially enclosing the fuel shutoff, the housing including:

a first section enclosing a plunger of the fuel shutoff to the carburetor and holding the spring against the plunger; and

a second section coupled to the first section and enclosing the actuating magnet.

30. (Withdrawn) The batteryless dual fuel generator of claim 19, wherein the fuel shutoff is a carburetor cutoff solenoid; and

wherein the generator further comprises:

a charge winding to generate electrical power to operate the carburetor cutoff solenoid, and

a switch to selectively power the carburetor cutoff solenoid by controlling electrical connection between the carburetor cutoff solenoid and the charge winding.

31. (Withdrawn) The batteryless dual fuel generator of claim 30, wherein the carburetor cutoff solenoid is normally open to provide liquid fuel to the engine when the carburetor cutoff solenoid is unpowered.

32. (Withdrawn) The batteryless dual fuel generator of claim 31, wherein a pull-starter drives the engine operating the charge winding to power and close the carburetor cutoff solenoid while starting the engine on gaseous fuel.

33. (Withdrawn) The batteryless dual fuel generator of claim 30, wherein the switch is an electro-mechanical switch connected to the charge winding and connecting at least one fuel source to the carburetor to selectively control fuel flow from the at least one fuel source to the carburetor.

34. (Withdrawn) The batteryless dual fuel generator of claim 30, wherein the charge winding is coupled to a voltage regulator to provide a regulated voltage to the carburetor cutoff solenoid.

35. (Withdrawn) A carburetor having a fuel shutoff comprising:

Champion - EX2082, Page 418 of 575
Harbor Freight Tools USA Inc. et al v. Champion Power Equip., Inc.
IPR2025-01121

a carburetor comprising:

a float bowl,

a throat,

a fuel passage to provide fuel from the float bowl to the throat; and

a fuel shutoff coupled to the carburetor having a first end in the carburetor that actuates to close the fuel passage and a second end external to the carburetor to actuate the first end; and

wherein the fuel shutoff actuates free from linear motion.

36. (Withdrawn) The carburetor having a fuel shutoff of claim 35, wherein the fuel shutoff is a manually actuated fuel shutoff.

37. (Withdrawn) The carburetor having a fuel shutoff of claim 35, wherein the fuel shutoff comprises a shaft extending into the carburetor through an aperture in the float bowl and coupled to a valve tip in the float bowl that rotates to open and close the fuel passage.

38. (Withdrawn) The carburetor having a fuel shutoff of claim 37, wherein the valve tip rotates parallel to an inlet of the fuel passage between a first position permitting fuel flow into the inlet and a second position blocking fuel flow into the inlet.

39. (Withdrawn) The carburetor having a fuel shutoff of claim 37, wherein the fuel passage has an inlet with a substantially flat perimeter edge and the valve tip maintains planar contact with the perimeter edge while rotating to open and close the fuel passage.

40. (Withdrawn) The carburetor having a fuel shutoff of claim 39, wherein the shaft is substantially horizontal and the inlet of the fuel passage faces substantially horizontal.

41. (Withdrawn) The carburetor having a fuel shutoff of claim 39 further comprising:

a plug in the aperture around the shaft; and

a compression spring around the shaft in the float bowl pushing against the plug to hold the valve tip against the perimeter edge of the inlet.

Champion - EX2082, Page 419 of 575
Harbor Freight Tools USA Inc. et al v. Champion Power Equip., Inc.
IPR2025-01121

42. (Withdrawn) The carburetor having a fuel shutoff of claim 41 further comprising a first fuel seal between the shaft and plug, the first fuel seal comprising a primary o-ring in an o-ring groove in the shaft.

43. (Withdrawn) The carburetor having a fuel shutoff of claim 42 further comprising:

a second fuel seal between the shaft and plug, the second fuel seal comprising a secondary o-ring in a counterbore in the plug; and

a support member mounted over the counterbore around the shaft to hold the secondary o-ring in the counterbore.

44. (Withdrawn) The carburetor having a fuel shutoff of claim 37 further comprising:

a lever coupled to the shaft outside of the carburetor;

a spring coupled to the lever to hold the fuel shutoff opening the fuel passage; and

a cable coupled to the lever to move the lever against the spring and rotate the fuel shutoff to close the fuel passage.

45. (Withdrawn) The carburetor having a fuel shutoff of claim 37, wherein the valve tip comprises thermoplastic.

46. (Withdrawn) The carburetor having a fuel shutoff of claim 37, wherein the valve tip comprises one of an oval and stadium shape.

47. (Withdrawn) The carburetor having a fuel shutoff of claim 37, wherein the valve tip has a cutout that aligns with the fuel passage to open the fuel passage.

48. (Withdrawn) A method of assembling a dual fuel engine comprising:

providing an engine operable on a gaseous fuel and a liquid fuel;

attaching a carburetor to an intake of the engine, the carburetor comprising:

a throat to mix gaseous fuel with air and liquid fuel with air,

a float bowl,

a fuel passage to provide liquid fuel from the float bowl to the throat;

coupling a switch to the engine to change operation of the engine between gaseous fuel and liquid fuel; and

attaching a liquid fuel cut-off to the carburetor to close the fuel passage upon actuation of the switch from liquid fuel to gaseous fuel.

49. (Withdrawn) The method of claim 48 further comprising coupling a manually operated control operatively to the liquid fuel cut-off.

50. (Withdrawn) The method of claim 48, wherein attaching the liquid fuel cut-off to the carburetor comprises:

providing a shaft having a valve tip located at an end of the shaft;

installing a compression spring on the shaft;

installing a plug on the shaft so that the compression spring is positioned between the plug and the valve tip; and

anchoring the plug in an aperture in the carburetor so that the compression spring holds the valve tip to an inlet of the fuel passage.

51. (Withdrawn) The method of claim 50, wherein providing the shaft having a valve tip located at an end of the shaft comprises pressing the valve tip onto the shaft.

52. (Withdrawn) The method of claim 50 further comprising positioning at least one fuel seal on the shaft to seal between the shaft and plug.

53. (Withdrawn) The method of claim 50, wherein the shaft rotates the valve tip between a first position allowing fuel flow into the fuel passage and a second position blocking fuel flow into the fuel passage.

54. (Withdrawn) The method of claim 53, wherein the valve tip comprises an oval or stadium shape with a cutout in the oval or stadium shape that aligns with the fuel passage when the valve tip is rotated to the first position such that fuel can pass through the cutout into the fuel passage.

Champion - EX2082, Page 421 of 575
Harbor Freight Tools USA Inc. et al v. Champion Power Equip., Inc.
IPR2025-01121

55. (Withdrawn) The method of claim 53 further comprising:

coupling a lever to the shaft;

attaching a control spring to the lever to actuate the shaft to one of the first position and second position; and

attaching a cable to the lever to actuate the shaft to the other of the first position and second position.

56. (Original) The dual fuel engine of claim 7, wherein the solenoid valve is open to provide liquid fuel to the engine when the solenoid valve is powered.

57. (Original) The dual fuel engine of claim 56, wherein a pull-starter drives the electrical power generator to power and open the solenoid valve while starting the engine on liquid fuel.

58. (Withdrawn) The batteryless dual fuel generator of claim 30, wherein the carburetor cutoff solenoid is open to provide liquid fuel to the engine when the carburetor cutoff solenoid is powered.

59. (Withdrawn) The batteryless dual fuel generator of claim 58, wherein a pull-starter drives the engine operating the charge winding to power and open the carburetor cutoff solenoid while starting the engine on liquid fuel.

60. (Original) The dual fuel engine of claim 7 further comprising a microcontroller to close the solenoid valve when the engine operates on gaseous fuel and open the solenoid valve to operate the engine on liquid fuel.

61. (Original) The dual fuel engine of claim 60, wherein the microcontroller closes the solenoid valve during engine shutdown from operation on liquid fuel.

62. (Withdrawn) The batteryless dual fuel generator of claim 30, wherein the switch is a microcontroller configured to close the carburetor cutoff solenoid when the engine operates on gaseous fuel and to open the carburetor cutoff solenoid to operate the engine on liquid fuel.

Champion - EX2082, Page 422 of 575
Harbor Freight Tools USA Inc. et al v. Champion Power Equip., Inc.
IPR2025-01121

63. (Withdrawn) The batteryless dual fuel generator of claim 62, wherein the microcontroller closes the carburetor cutoff solenoid during engine shutdown from operation on liquid fuel.

Champion - EX2082, Page 423 of 575
Harbor Freight Tools USA Inc. et al v. Champion Power Equip., Inc.
IPR2025-01121

RECEIVED
CENTRAL FAX CENTER
NOV 06 2017

Customer No. 26629
Confirmation No. 1059

Patent
Attorney Docket No. CET1090.042

IN THE UNITED STATES PATENT AND TRADEMARK OFFICE

In re Application of	:	Collie et al.
Serial No.	:	14/925,441
Filed	:	October 28, 2015
For	:	BATTERYLESS DUAL FUEL ENGINE WITH LIQUID FUEL CUT-OFF
Group Art No.	:	3747
Examiner	:	Long T Tran

CERTIFICATION UNDER 37 CFR 1.8(a) and 1.10

I hereby certify that, on the date shown below, this correspondence is being:

Mailing

o deposited with the US Postal Service in an envelope addressed to Commissioner for Patents, P.O. Box 1450, Alexandria, VA 22313-1450

37 CFR 1.8(a)
o with sufficient postage as first class mail

37 CFR 1.10
o As "Express Mail Post Office to Addressee" Mailing Label No.

Transmission

■ transmitted by facsimile to Fax No.: 571-273-8300 addressed to Director Cheryl Tyler at the Patent and Trademark Office.

o transmitted by EFS-WEB addressed to Director Cheryl Tyler at the Patent and Trademark Office.

Date: November 6, 2017

/Robyn L. Templin/
Signature

Commissioner for Patents
P.O. Box 1450
Alexandria, VA 22313-1450

PETITION UNDER 37 C.F.R. §1.181 SEEKING SUPERVISORY REVIEW OF RESTRICTION REQUIREMENT

Dear Madam:

Responsive to the Office Action mailed August 7, 2017, Applicant requests supervisory review and consideration of the Restriction Requirement issued April 21, 2017, based on the following remarks in support of rejoinder of withdrawn claims 19-55, 58-59, 62-63.

NOV 06 2017

REMARKS

In the Restriction Requirement issued April 21, 2017 (hereinafter, "Restriction Requirement"), the Examiner imposed a restriction of claims 1-63. The Examiner has identified four 'inventions' in the pending claims. The Examiner's classification of the 'inventions' include Group I consisting of claims 1-18, 56-57, and 60-61 drawn to a dual fuel engine and classified by the Examiner in class F02D 19/06, Group II consisting of claims 19-34, 58-59, and 62-63 drawn to a generator and classified by the Examiner in class F02B 63/04, Group III consisting of claims 35-47 drawn to a carburetor and classified by the Examiner in class F02M 17/20, and Group IV consisting of claims 48-55 drawn to a process of making an engine and classified by the Examiner in class B23P 19/042.

In response to the Restriction Requirement, Applicant filed a timely Election and Response on June 21, 2017, in which alleged Invention I was elected with traverse, corresponding to claims 1-18, 56-57, and 60-61. In the Office Action mailed August 7, 2017 (hereinafter, "Office Action"), the Examiner made the restriction of claims 19-55, 58-59, 62-63 final and withdrew the claims from further consideration as being drawn to a non-elected invention. In the Office Action, the Examiner did not provide any further support for the restriction. *See Office Action*, 08/07/2017, p. 2.

For the reasons set forth below and in Applicant's June 21, 2017 Response to the Restriction Requirement, Applicant believes that the Examiner has improperly restricted claims 1-63 of the pending application, and, therefore, requests rejoinder of all claims, of each Invention.

Restriction of Groups I, II, III, and IV

The Examiner asserted in the Restriction Requirement that alleged "Inventions I, II, III and IV are directed to related internal combustion engines," but that the "inventions are distinct, each from the other," and issued a restriction under MPEP § 806.05(j). *Restriction Requirement*, p. 2. MPEP § 806.05(j)states that "[t]o support a requirement for restriction between two or more related product inventions, or between two or more related process inventions, both two-way distinctness and reasons for insisting on restriction are necessary." *Id.* at § 806.05(j). Related product or process inventions are only distinct if "(A) the inventions *as claimed* do not overlap in scope, i.e., are mutually exclusive; (B) the inventions *as claimed* are not obvious variants; and (C) the inventions *as claimed* are either not capable of use together or can have a materially different design, mode of operation, function, or effect." *Id.* (emphasis in original). "The burden is on the examiner to provide an example to support the determination that the inventions are distinct." *Id.*

PAGE 2/4 * RCVD AT 11/6/2017 1:03:00 PM [Eastern Standard Time] * SVR:W-PTOFAX-001/1 * DNIS:2738300 * CSID:2622688185 * DURATION (mm-ss):00-52

In this case, the Examiner has failed to meet the burden set forth by MPEP § 806.05(j)(A)-(C). That is, in order to show that alleged Inventions I-IV are distinct as claimed, the Examiner must prove that each alleged invention is (A) mutually exclusive; (B) not obvious variants, **and** (C) "not capable of use together or can have a materially different design, mode of operation, function, or effect." *See Id.* at § 806.05(j)(A)-(C). The Examiner did not prove each of (A)-(C), but instead merely made conclusory statements that "[i]n the instant case, the inventions as claimed have a materially different design, mode of operation, function, or effect. Furthermore, the inventions as claimed do not encompass overlapping subject matter and there is nothing of record to show them to be obvious variants." *Restriction Requirement*, p. 2-3. The Examiner did not cite to any claim elements to support that conclusion. Further, the Examiner did not provide an example to support the determination that alleged Inventions I-IV are distinct, as required by MPEP § 806.05(j).

Notwithstanding the aforementioned deficiency of the restriction, alleged Inventions I, II, III, and IV, as claimed in independent claims 1, 19, 35, and 48 are not distinct for at least the reason that they overlap in scope. *See* MPEP § 806.05(j)(A). Each of claims 1, 19, 35 and 48 directed to alleged Inventions I, II, III, and IV, respectively, include a carburetor and either a fuel shutoff or a fuel cut-off attached to the carburetor. In addition, each of claims 19, 35, and 48 directed to alleged Inventions II, III, and IV include that the carburetor has a float bowl, a throat, and a fuel passage to provide fuel from the float bowl to the throat. Claims 19, 35, and 48 also include that the fuel shutoff or fuel cut-off attaches to the carburetor to close the fuel passage. In comparison, claim 6 of alleged Invention I includes a fuel path to the engine that is opened and closed by the fuel cut-off. As such, all of alleged Inventions I, II, III, and IV include a carburetor and a fuel shutoff/cut-off that attaches to the carburetor to close a fuel passage/path.

In addition, alleged Inventions I, II, and IV, as claimed in independent claims 1, 19, and 48, respectively, are not distinct since they overlap in scope regarding the carburetor attached to an intake of an engine. Each of claims 1, 19, and 48 include an engine operable on a gaseous fuel and a liquid fuel. Also, claims 1, 30, and 48 directed to alleged Inventions I, II, and IV, respectively, all include a switch to change operation of the engine between gaseous fuel and liquid fuel. Furthermore, claim 1 (alleged Invention I) includes the liquid fuel cut-off attached to the carburetor to interrupt liquid fuel upon actuation of the switch from liquid fuel to gaseous fuel. Claim 19 (alleged Invention II) includes the fuel shutoff attached to the carburetor to close the fuel passage upon selection of engine operation to gaseous fuel. Claim 48 (alleged Invention IV) includes attaching a liquid fuel cut-off to the carburetor to close the fuel passage upon actuation of the switch from liquid fuel to gaseous fuel. Therefore, each of alleged Invention I, II,

PAGE 3/4 * RCVD AT 11/6/2017 1:03:00 PM [Eastern Standard Time] * SVR:W-PTOFAX-001/1 * DNIS:2738300 * CSID:2622688185 * DURATION (mm-ss):00-52

and IV as claimed in independent claims 1, 19, and 48, respectively, include that the fuel shutoff/cut-off attaches to the carburetor to interrupt liquid fuel or close a liquid fuel passage upon selection of engine operation to gaseous fuel.

All of alleged Inventions I, II, III, and IV as claimed in claims 15, 25, 44, 55, respectively, also include a cable actuated fuel shutoff/cut-off. Initially, each of claims 14, 21, 37, and 53 directed to alleged Inventions I, II, III, and IV, respectively, include a rotating shaft extending through an aperture or opening in the carburetor, and either a blocking member or a valve member couples to the shaft in the carburetor that rotates to selectively control fuel flow through a fuel passage/path within the carburetor. Furthermore, each of alleged Inventions I, II, III, IV (via claims 14, 26, 42, 52, respectively) includes a fuel seal around the shaft for the aperture or opening in the carburetor. Each of alleged Inventions I, II, III, IV (via claims 15, 25, 44, 55, respectively) includes a lever coupled to the shaft, and a cable couples to the lever to actuate the blocking/valve member. Therefore, as claimed, alleged Invention I, II, III, and IV overlap in scope and cannot be said to be mutually exclusive under MPEP § 806.05(j).

In light of the above, alleged Invention I, II, III, and IV as claimed in claims 1-18, 56-57, 60-61; claims 19-34, 58-59, 62-63; claims 35-47; and claims 48-55; respectively, are not distinct. The Examiner has not met the burdens set forth by MPEP § 806.05(j) to show that alleged Inventions I-IV, as claimed, are distinct, as the Examiner has not shown that the alleged inventions are mutually exclusive, not obvious variants, **and** not capable of use together / have a materially different design, mode of operation, function, or effect. On the contrary, alleged Inventions I-IV, as called for in the claims, are related under the present disclosure and overlap in scope. Accordingly, Applicant respectfully requests that the restriction between alleged Inventions I, II, III, and IV be withdrawn.

Conclusion

For all these reasons, Applicant respectfully requests rejoinder of all claims, of each group. The Examiner is invited to call the undersigned to discuss this Election or any other matters regarding this application to further prosecution.

Dated: November 6, 2017
Attorney Docket No.: CET1090.042

Respectfully submitted,

/Timothy J. Ziolkowski/

P.O. ADDRESS:
Ziolkowski Patent Solutions Group, SC
136 South Wisconsin Street
Port Washington, WI 53074
262-268-8100

Timothy J. Ziolkowski
Registration No. 38,368
Direct Dial 262-268-8181
tjz@zpspatents.com

PAGE 4/4 * RCVD AT 11/6/2017 1:03:00 PM [Eastern Standard Time] * SVR:W-PTOFAX-001/1 * DNIS:2738300 * CSID:2622688185 * DURATION (mm-ss):00-52

PTO/SB/06 (09-11)
Approved for use through 1/31/2014. OMB 0651-0032
U.S. Patent and Trademark Office; U.S. DEPARTMENT OF COMMERCE
Under the Paperwork Reduction Act of 1995, no persons are required to respond to a collection of information unless it displays a valid OMB control number.

PATENT APPLICATION FEE DETERMINATION RECORD

Substitute for Form PTO-875

Application or Docket Number	Filing Date	
14/925,441	10/28/2015	☐ To be Mailed

ENTITY: ☐ LARGE ☒ SMALL ☐ MICRO

APPLICATION AS FILED – PART I

FOR	(Column 1) NUMBER FILED	(Column 2) NUMBER EXTRA	RATE ($)	FEE ($)
☐ BASIC FEE (37 CFR 1.16(a), (b), or (c))	N/A	N/A	N/A	
☐ SEARCH FEE (37 CFR 1.16(k), (i), or (m))	N/A	N/A	N/A	
☐ EXAMINATION FEE (37 CFR 1.16(o), (p), or (q))	N/A	N/A	N/A	
TOTAL CLAIMS (37 CFR 1.16(i))	minus 20 =	*	x $ =	
INDEPENDENT CLAIMS (37 CFR 1.16(h))	minus 3 =	*	x $ =	
☐ APPLICATION SIZE FEE (37 CFR 1.16(s))	If the specification and drawings exceed 100 sheets of paper, the application size fee due is $310 ($155 for small entity) for each additional 50 sheets or fraction thereof. See 35 U.S.C. 41(a)(1)(G) and 37 CFR 1.16(s).			
☐ MULTIPLE DEPENDENT CLAIM PRESENT (37 CFR 1.16(j))				
* If the difference in column 1 is less than zero, enter "0" in column 2.			TOTAL	

APPLICATION AS AMENDED – PART II

AMENDMENT

11/06/2017	(Column 1) CLAIMS REMAINING AFTER AMENDMENT		(Column 2) HIGHEST NUMBER PREVIOUSLY PAID FOR	(Column 3) PRESENT EXTRA	RATE ($)	ADDITIONAL FEE ($)
Total (37 CFR 1.16(i))	* 63	Minus	** 63	= 0	x $0 =	0
Independent (37 CFR 1.16(h))	* 4	Minus	***4	= 0	x $0 =	0
☐ Application Size Fee (37 CFR 1.16(s))						
☐ FIRST PRESENTATION OF MULTIPLE DEPENDENT CLAIM (37 CFR 1.16(j))						
					TOTAL ADD'L FEE	0

AMENDMENT

	(Column 1) CLAIMS REMAINING AFTER AMENDMENT		(Column 2) HIGHEST NUMBER PREVIOUSLY PAID FOR	(Column 3) PRESENT EXTRA	RATE ($)	ADDITIONAL FEE ($)
Total (37 CFR 1.16(i))	*	Minus	**	=	x $ =	
Independent (37 CFR 1.16(h))	*	Minus	***	=	x $ =	
☐ Application Size Fee (37 CFR 1.16(s))						
☐ FIRST PRESENTATION OF MULTIPLE DEPENDENT CLAIM (37 CFR 1.16(j))						
					TOTAL ADD'L FEE	

* If the entry in column 1 is less than the entry in column 2, write "0" in column 3.
** If the "Highest Number Previously Paid For" IN THIS SPACE is less than 20, enter "20".
*** If the "Highest Number Previously Paid For" IN THIS SPACE is less than 3, enter "3".
The "Highest Number Previously Paid For" (Total or Independent) is the highest number found in the appropriate box in column 1.

LIE
LINDA HUMES

This collection of information is required by 37 CFR 1.16. The information is required to obtain or retain a benefit by the public which is to file (and by the USPTO to process) an application. Confidentiality is governed by 35 U.S.C. 122 and 37 CFR 1.14. This collection is estimated to take 12 minutes to complete, including gathering, preparing, and submitting the completed application form to the USPTO. Time will vary depending upon the individual case. Any comments on the amount of time you require to complete this form and/or suggestions for reducing this burden, should be sent to the Chief Information Officer, U.S. Patent and Trademark Office, U.S. Department of Commerce, P.O. Box 1450, Alexandria, VA 22313-1450. DO NOT SEND FEES OR COMPLETED FORMS TO THIS ADDRESS. **SEND TO: Commissioner for Patents, P.O. Box 1450, Alexandria, VA 22313-1450.**
If you need assistance in completing the form, call 1-800-PTO-9199 and select option 2.

UNITED STATES PATENT AND TRADEMARK OFFICE

UNITED STATES DEPARTMENT OF COMMERCE
United States Patent and Trademark Office
Address: COMMISSIONER FOR PATENTS
P.O. Box 1450
Alexandria, Virginia 22313-1450
www.uspto.gov

APPLICATION NO.	FILING DATE	FIRST NAMED INVENTOR	ATTORNEY DOCKET NO.	CONFIRMATION NO.
14/925,441	10/28/2015	Kendall J. Collie	CET1090.042	1059

26629 7590 08/07/2017
ZIOLKOWSKI PATENT SOLUTIONS GROUP, SC (ZPS)
136 S WISCONSIN ST
PORT WASHINGTON, WI 53074

EXAMINER
TRAN, LONG T

ART UNIT	PAPER NUMBER
3747	

NOTIFICATION DATE	DELIVERY MODE
08/07/2017	ELECTRONIC

Please find below and/or attached an Office communication concerning this application or proceeding.

The time period for reply, if any, is set in the attached communication.

Notice of the Office communication was sent electronically on above-indicated "Notification Date" to the following e-mail address(es):

info@zpspatents.com
sml@zpspatents.com

Office Action Summary	Application No. 14/925,441	Applicant(s) COLLIE ET AL.	
	Examiner LONG T. TRAN	Art Unit 3747	AIA (First Inventor to File) Status Yes

-- The MAILING DATE of this communication appears on the cover sheet with the correspondence address --

Period for Reply

A SHORTENED STATUTORY PERIOD FOR REPLY IS SET TO EXPIRE 3 MONTHS FROM THE MAILING DATE OF THIS COMMUNICATION.

- Extensions of time may be available under the provisions of 37 CFR 1.136(a). In no event, however, may a reply be timely filed after SIX (6) MONTHS from the mailing date of this communication.
- If NO period for reply is specified above, the maximum statutory period will apply and will expire SIX (6) MONTHS from the mailing date of this communication.
- Failure to reply within the set or extended period for reply will, by statute, cause the application to become ABANDONED (35 U.S.C. § 133). Any reply received by the Office later than three months after the mailing date of this communication, even if timely filed, may reduce any earned patent term adjustment. See 37 CFR 1.704(b).

Status

1)☒ Responsive to communication(s) filed on *21 June 2017*.

☐ A declaration(s)/affidavit(s) under **37 CFR 1.130(b)** was/were filed on _____.

2a)☐ This action is **FINAL**. 2b)☒ This action is non-final.

3)☐ An election was made by the applicant in response to a restriction requirement set forth during the interview on _____; the restriction requirement and election have been incorporated into this action.

4)☐ Since this application is in condition for allowance except for formal matters, prosecution as to the merits is closed in accordance with the practice under *Ex parte Quayle*, 1935 C.D. 11, 453 O.G. 213.

Disposition of Claims*

5)☒ Claim(s) *1-18,56,57,60 and 61* is/are pending in the application.

5a) Of the above claim(s) *19-55,58-59,62-63* is/are withdrawn from consideration.

6)☐ Claim(s) _____ is/are allowed.

7)☒ Claim(s) *1-18,56-57,60-61* is/are rejected.

8)☐ Claim(s) _____ is/are objected to.

9)☐ Claim(s) _____ are subject to restriction and/or election requirement.

* If any claims have been determined allowable, you may be eligible to benefit from the **Patent Prosecution Highway** program at a participating intellectual property office for the corresponding application. For more information, please see http://www.uspto.gov/patents/init_events/pph/index.jsp or send an inquiry to PPHfeedback@uspto.gov.

Application Papers

10)☐ The specification is objected to by the Examiner.

11)☒ The drawing(s) filed on *28 October 2015* is/are: a)☒ accepted or b)☐ objected to by the Examiner.

Applicant may not request that any objection to the drawing(s) be held in abeyance. See 37 CFR 1.85(a).

Replacement drawing sheet(s) including the correction is required if the drawing(s) is objected to. See 37 CFR 1.121(d).

Priority under 35 U.S.C. § 119

12)☐ Acknowledgment is made of a claim for foreign priority under 35 U.S.C. § 119(a)-(d) or (f).

Certified copies:

a)☐ All b)☐ Some** c)☐ None of the:

1.☐ Certified copies of the priority documents have been received.

2.☐ Certified copies of the priority documents have been received in Application No. _____.

3.☐ Copies of the certified copies of the priority documents have been received in this National Stage application from the International Bureau (PCT Rule 17.2(a)).

** See the attached detailed Office action for a list of the certified copies not received.

Attachment(s)

1) ☒ Notice of References Cited (PTO-892)

2) ☒ Information Disclosure Statement(s) (PTO/SB/08a and/or PTO/SB/08b) Paper No(s)/Mail Date *10/28/15*.

3) ☐ Interview Summary (PTO-413) Paper No(s)/Mail Date. _____.

4) ☐ Other: _____.

Champion - EX2082, Page 430 of 575
Harbor Freight Tools USA Inc. et al v. Champion Power Equip., Inc.
IPR2025-01121

DETAILED ACTION

1. The present application, filed on or after March 16, 2013, is being examined under the first inventor to file provisions of the AIA.

2. Applicant elected group I, Claims 1 - 18, 56 – 57, and 60 – 61, with traverse on June 21, 2017. The remaining claims have been withdrawn from consideration.

Claim Rejections - 35 USC § 102

3. In the event the determination of the status of the application as subject to AIA 35 U.S.C. 102 and 103 (or as subject to pre-AIA 35 U.S.C. 102 and 103) is incorrect, any correction of the statutory basis for the rejection will not be considered a new ground of rejection if the prior art relied upon, and the rationale supporting the rejection, would be the same under either status.

4. The following is a quotation of the appropriate paragraphs of 35 U.S.C. 102 that form the basis for the rejections under this section made in this Office action:

> A person shall be entitled to a patent unless –
>
> (a)(2) the claimed invention was described in a patent issued under section 151, or in an application for patent published or deemed published under section 122(b), in which the patent or application, as the case may be, names another inventor and was effectively filed before the effective filing date of the claimed invention.

5. Claims 1, 3 – 4, 12 – 13 are rejected under 35 U.S.C. 102(a)(2) as being anticipated by Poehlman (US 4,489,699).

<u>Regarding Claim 1:</u>

Poelhman teaches a dual fuel engine comprising: an engine (13) operable on a gaseous fuel and a liquid fuel (Col 3 lines 25 – 36 describes gasoline and natural gas); a switch (51) to change operation of the engine between gaseous

fuel and liquid fuel; a carburetor (15) attached to an intake (105) of the engine to mix air and fuel and connect to a gaseous fuel source (27) and a liquid fuel source (21); and a liquid fuel cut-off (41) attached to the carburetor to interrupt liquid fuel upon actuation of the switch from liquid fuel to gaseous fuel.

Regarding Claim 3:

Poelhman teaches the gaseous fuel is LPG and the liquid fuel is gasoline (Col 3 lines 25 – 36).

Regarding Claim 4:

Poelhman teaches a liquid fuel valve (43) along a liquid fuel line (19) coupling the liquid fuel source to the carburetor; and a gaseous fuel valve (45) along a gaseous fuel line (25) coupling the gaseous fuel source to the carburetor.

Regarding Claim 12:

Poelhman teaches the liquid fuel cut-off is manually actuated to interrupt liquid fuel (via switch 51).

Regarding Claim 13:

Poehman teaches the liquid fuel cut-off actuates to interrupt liquid fuel free from linear motion (via switch 51).

Claim Rejections - 35 USC § 103

6. In the event the determination of the status of the application as subject to AIA 35 U.S.C. 102 and 103 (or as subject to pre-AIA 35 U.S.C. 102 and 103) is incorrect, any correction of the statutory basis for the rejection will not be considered a new ground of

rejection if the prior art relied upon, and the rationale supporting the rejection, would be the same under either status.

7. The following is a quotation of 35 U.S.C. 103 which forms the basis for all obviousness rejections set forth in this Office action:

> A patent for a claimed invention may not be obtained, notwithstanding that the claimed invention is not identically disclosed as set forth in section 102, if the differences between the claimed invention and the prior art are such that the claimed invention as a whole would have been obvious before the effective filing date of the claimed invention to a person having ordinary skill in the art to which the claimed invention pertains. Patentability shall not be negated by the manner in which the invention was made.

8. The factual inquiries set forth in *Graham v. John Deere Co.*, 383 U.S. 1, 148 USPQ 459 (1966), that are applied for establishing a background for determining obviousness under 35 U.S.C. 103 are summarized as follows:

1. Determining the scope and contents of the prior art.
2. Ascertaining the differences between the prior art and the claims at issue.
3. Resolving the level of ordinary skill in the pertinent art.
4. Considering objective evidence present in the application indicating obviousness or nonobviousness.

9. This application currently names joint inventors. In considering patentability of the claims the examiner presumes that the subject matter of the various claims was commonly owned as of the effective filing date of the claimed invention(s) absent any evidence to the contrary. Applicant is advised of the obligation under 37 CFR 1.56 to point out the inventor and effective filing dates of each claim that was not commonly owned as of the effective filing date of the later invention in order for the examiner to consider the applicability of 35 U.S.C. 102(b)(2)(C) for any potential 35 U.S.C. 102(a)(2) prior art against the later invention.

10. Claims 2, 5 – 10, 56 – 57, 60 – 61 are rejected under 35 U.S.C. 103 as being unpatentable over Poelhman (US 4,489,699) in view of Sugimoto et al. (US 2007/0137591).

Regarding Claim 2:

Poelhman teaches all of the claimed limitation except for the engine is a pull start, batteryless engine.

However, Sugimoto et al. teach a similar dual fuel engine (paragraph 0086) comprising a pull start, batteryless engine (via 46) for the purpose of starting the engine.

Therefore, it would have been obvious to one of ordinary skill in the art at the time of the invention to provide the pull start function of Sugimoto et al. in order to start the engine for a portable generator system.

Regarding Claim 5:

Poelhman teaches all of the claimed limitations except for the engine is a pull-start engine having an electrical power generator to supply electrical power.

However, Sugimoto et al. teaches the engine is a pull-start engine (via 46) having an electrical power generator (40) to supply electrical power for the purpose of starting the engine.

Therefore, it would have been obvious to one of ordinary skill in the art at the time of the invention to provide the pull start function of Sugimoto et al. in order to start the engine for a portable generator system.

Regarding Claim 6:

Poelhman teaches the switch is an electro-mechanical switch (51 and via 59) connecting one fuel source to the carburetor; and wherein the liquid fuel cut-off is a solenoid (81, 83) connected to open and close a fuel path.

Poelhman is silent to a pull-start engine having an electrical power generator to supply electrical power.

However, Sugimoto et al. teaches the engine is a pull-start engine (via 46) having an electrical power generator (40) to supply electrical power for the purpose of starting the engine.

Therefore, it would have been obvious to one of ordinary skill in the art at the time of the invention to provide the pull start function of Sugimoto et al. in order to start the engine for a portable generator system.

Regarding Claims 7 – 10, 56 – 57, 60 – 61:

Poelhman teaches all of the claimed limitations except for a power generator.

However, Sugimoto et al. teaches the engine is a pull-start engine (via 46) having an electrical power generator (40) to supply electrical power for the purpose of starting the engine.

Therefore, it would have been obvious to one of ordinary skill in the art at the time of the invention to provide the pull start function of Sugimoto et al. in order to start the engine for a portable generator system.

11. Claim 11 is rejected under 35 U.S.C. 103 as being unpatentable over Poelhman (US 4,489,699) in view of Sugimoto et al. (US 2007/0137591), and further in view of Satter (US 3,412,258).

Regarding Claim 11:

Modified Poelhman teaches all of the claimed limitations except for the electrical power generator comprises a magneto or an alternator coupled to a voltage regulator to provide a regulated voltage to the solenoid valve.

However, Satter teaches a similar generator comprising a magneto or an alternator (12) coupled to a voltage regulator (via phase A line) to provide a regulated voltage to the solenoid valve (44) for the purpose of supplying power to the valve.

Therefore it would have been obvious to one of ordinary skill in the art at the time of the invention to provide the alternator of Satter in the engine of modified Poelhman in order to control the voltage while actuating the valve.

12. Claims 14 and 15 are rejected under 35 U.S.C. 103 as being unpatentable over Poelhman (US 4,489,699) in view of Swanson et al. (US 5,611,312).

Regarding Claim 14:

Poelhman is silent to the liquid fuel cut-off comprises: a rotating shaft extending through an aperture in the carburetor; a fuel seal around the shaft to seal the aperture; and a blocking member coupled to the shaft in the carburetor

that rotates between a blocking and a non-blocking position to selectively block a liquid fuel path to the engine.

However, Swanson et al. teaches a liquid fuel cut-off (118) comprising a rotating shaft (58) extending through an aperture in the carburetor (50); a fuel sea (112, 114)l around the shaft to seal the aperture; and a blocking member (56) coupled to the shaft in the carburetor that rotates between a blocking and a non-blocking position to selectively block a liquid fuel path to the engine for the purposes of preventing backflow.

Therefore it would have been obvious to one of ordinary skill in the art at the time of the invention to provide the fuel cut-off of Swanson et al. in the engine of Poelhman in order to prevent fuel backflow and to control the flow of fuel through the carburetor.

Regarding Claim 15:

Poelhman is silent to a lever coupled to the shaft outside the carburetor; a spring coupled to the lever to hold the blocking member in either the blocking or non-blocking position; and a cable coupled to the lever to pull against the spring and rotate the blocking member to the other of the blocking or non-blocking positions.

However, Swanson et al. teaches a lever (395) coupled to the shaft outside the carburetor; a spring (397) coupled to the lever to hold the blocking member in either the blocking or non-blocking position; and a cable (400) coupled to the lever to pull against the spring and rotate the blocking member to

the other of the blocking or non-blocking positions for the purpose of creating a safety feature.

Therefore it would have been obvious to one of ordinary skill in the art at the time of the invention to provide the fuel cut-off of Swanson et al. in the engine of Poelhman in order to prevent fuel backflow and to control the flow of fuel through the carburetor.

13. Claims 16 – 18 are rejected under 35 U.S.C. 103 as being unpatentable over Poelhman (US 4,489,699) in view of Andersson et al. (US 2010/0258099).

Regarding Claim 16:

Poelhman is silent to the liquid fuel cut-off is magnetically actuated to selectively interrupt liquid fuel.

However, Andersson et al. teaches the liquid fuel cut-off is magnetically (via 77 and 72, paragraph 0111) actuated to selectively interrupt liquid fuel for the purpose of energizing the valve to open and close.

Therefore, it would have been obvious to one of ordinary skill in the art at the time of the invention to provide the magnet of Andersson et al. in the solenoid valve of Poelhman in order to minimize delay with the valve closure.

Regarding Claim 17:

Poelhman is silent to a spring pushing the liquid fuel cut-off to interrupt liquid fuel; and an actuating magnet coupled to the carburetor to selectively pull

the liquid fuel cut-off against the spring away from a position interrupting liquid fuel.

However, Andersson et al. teaches a spring (79) pushing the liquid fuel cut-off (18) to interrupt liquid fuel; and an actuating magnet (77 and 72) coupled to the carburetor (12) to selectively pull the liquid fuel cut-off against the spring away from a position interrupting liquid fuel for the purpose of energizing the valve to open and close.

Therefore, it would have been obvious to one of ordinary skill in the art at the time of the invention to provide the magnet of Andersson et al. in the solenoid valve of Poelhman in order to minimize delay with the valve closure.

Regarding Claim 18:

Poelhman is silent to a housing (66) at least partially enclosing the liquid fuel cutoff, the housing including: a first section (64) enclosing a plunger (65) of the liquid fuel cut-off to the carburetor and holding the spring against the plunger; and a second section (74) coupled to the first section and enclosing the actuating magnet for the purpose of energizing the valve to open and close.

Therefore, it would have been obvious to one of ordinary skill in the art at the time of the invention to provide the magnet of Andersson et al. in the solenoid valve of Poelhman in order to minimize delay with the valve closure.

Conclusion

14. The prior art made of record and not relied upon is considered pertinent to applicant's disclosure.

15. Any inquiry concerning this communication or earlier communications from the examiner should be directed to LONG T. TRAN whose telephone number is (571)270-1899. The examiner can normally be reached on M-F, 7:30am - 5:00pm.

Examiner interviews are available via telephone, in-person, and video conferencing using a USPTO supplied web-based collaboration tool. To schedule an interview, applicant is encouraged to use the USPTO Automated Interview Request (AIR) at http://www.uspto.gov/interviewpractice.

If attempts to reach the examiner by telephone are unsuccessful, the examiner's supervisor, Lindsay Low can be reached on 571-272-1196. The fax phone number for the organization where this application or proceeding is assigned is 571-273-8300.

Information regarding the status of an application may be obtained from the Patent Application Information Retrieval (PAIR) system. Status information for published applications may be obtained from either Private PAIR or Public PAIR. Status information for unpublished applications is available through Private PAIR only. For more information about the PAIR system, see http://pair-direct.uspto.gov. Should you have questions on access to the Private PAIR system, contact the Electronic Business Center (EBC) at 866-217-9197 (toll-free). If you would like assistance from a USPTO Customer Service Representative or access to the automated information system, call 800-786-9199 (IN USA OR CANADA) or 571-272-1000.

/LONG T TRAN/
Examiner, Art Unit 3747

Notice of References Cited	Application/Control No. 14/925,441	Applicant(s)/Patent Under Reexamination COLLIE ET AL.	
	Examiner LONG T. TRAN	Art Unit 3747	Page 1 of 1

U.S. PATENT DOCUMENTS

*		Document Number Country Code-Number-Kind Code	Date MM-YYYY	Name	CPC Classification	US Classification
*	A	US-2015/0122230 A1	05-2015	Sarder; Mark J.	F02D19/0647	123/525
*	B	US-2011/0253102 A1	10-2011	Watanabe; Tsuyoshi	F02D41/064	123/438
*	C	US-2010/0258099 A1	10-2010	Andersson; Martin N.	F02D31/006	123/676
*	D	US-2007/0137591 A1	06-2007	Sugimoto; Yasuhiro	F02B43/00	123/41.7
*	E	US-6,591,817 B2	07-2003	Deutsch; Robert W.	F02D19/0647	123/525
*	F	US-2002/0134362 A1	09-2002	Deutsch, Robert W.	F02D19/0647	123/575
*	G	US-5,611,312 A	03-1997	Swanson; Mark S.	F02M1/02	123/179.18
*	H	US-4,489,699 A	12-1984	Poehlman; Arthur G.	F02B69/04	123/525
*	I	US-3,783,849 A	01-1974	Bramfitt; Thomas Hugh	F02M13/06	123/179.16
*	J	US-3,718,000 A	02-1973	Walker; Brooks	F02B11/02	123/525
*	K	US-3,659,574 A	05-1972	Reschke; Albert H.	F02M13/08	123/525
*	L	US-3,412,258 A	11-1968	WILLIAM SATTER HARVEY	H02P9/42	290/40R
	M	US-				

FOREIGN PATENT DOCUMENTS

*		Document Number Country Code-Number-Kind Code	Date MM-YYYY	Country	Name	CPC Classification
	N					
	O					
	P					
	Q					
	R					
	S					
	T					

NON-PATENT DOCUMENTS

*		Include as applicable: Author, Title Date, Publisher, Edition or Volume, Pertinent Pages)
	U	
	V	
	W	
	X	

*A copy of this reference is not being furnished with this Office action. (See MPEP § 707.05(a).)
Dates in MM-YYYY format are publication dates. Classifications may be US or foreign.

Search Notes	Application/Control No.	Applicant(s)/Patent Under Reexamination
	14925441	COLLIE ET AL.
	Examiner	**Art Unit**
	LONG T TRAN	3747

CPC- SEARCHED

Symbol	Date	Examiner
F02D19/0647; F02D19/0613; F02D29/06; F02D41/0025; F02D11/02; F02D19/0642; F02D35/0053; F02B63/04; F02B43/00; F02B63/044; F02M13/08; F02M19/08; F02M21/047; F02N3/02	8/2/2017	LT

CPC COMBINATION SETS - SEARCHED

Symbol	Date	Examiner

US CLASSIFICATION SEARCHED

Class	Subclass	Date	Examiner

* See search history printout included with this form or the SEARCH NOTES box below to determine the scope of the search.

SEARCH NOTES

Search Notes	Date	Examiner
Inventor search	8/2/2017	LT
PLUS search	8/2/2017	LT
Forward and backward citation	8/2/2017	LT
Text search	8/2/2017	LT

INTERFERENCE SEARCH

US Class/ CPC Symbol	US Subclass / CPC Group	Date	Examiner

Champion - EX2082, Page 443 of 575
Harbor Freight Tools USA Inc. et al v. Champion Power Equip., Inc.
IPR2025-01121

UNITED STATES PATENT AND TRADEMARK OFFICE

UNITED STATES DEPARTMENT OF COMMERCE
United States Patent and Trademark Office
Address: COMMISSIONER FOR PATENTS
P.O. Box 1450
Alexandria, Virginia 22313-1450
www.uspto.gov

BIB DATA SHEET

CONFIRMATION NO. 1059

SERIAL NUMBER	FILING or 371(c) DATE	CLASS	GROUP ART UNIT	ATTORNEY DOCKET NO.
14/925,441	10/28/2015 **RULE**	123	3747	CET1090.042

APPLICANTS
Champion Engine Technology, LLC, Sussex, WI;

INVENTORS
Kendall J. Collie, Anaheim Hills, CA;
Mark J. Sarder, Waukesha, WI;
Aleko D. Sotiriades, Cedarburg, WI;
James J. Dehn, Brookfield, WI;
Leigh Jenison, Hartland, WI;
Hiroaki Sato, Brookfield, WI;

**** CONTINUING DATA ****************************
This application is a CIP of 14/738,060 06/12/2015

**** FOREIGN APPLICATIONS ****************************

**** IF REQUIRED, FOREIGN FILING LICENSE GRANTED **** ** SMALL ENTITY **
11/06/2015

Foreign Priority claimed	☐ Yes ☑ No		STATE OR COUNTRY	SHEETS DRAWINGS	TOTAL CLAIMS	INDEPENDENT CLAIMS
35 USC 119(a-d) conditions met	☐ Yes ☑ No	☐ Met after Allowance				
Verified and Acknowledged	/LONG T TRAN/ Examiner's Signature	LT Initials	CA	12	63	4

ADDRESS
ZIOLKOWSKI PATENT SOLUTIONS GROUP, SC (ZPS)
136 S WISCONSIN ST
PORT WASHINGTON, WI 53074
UNITED STATES

TITLE
BATTERYLESS DUAL FUEL ENGINE WITH LIQUID FUEL CUT-OFF

FILING FEE RECEIVED		
2660	FEES: Authority has been given in Paper No._____ to charge/credit DEPOSIT ACCOUNT No._____ for following:	☐ All Fees ☐ 1.16 Fees (Filing) ☐ 1.17 Fees (Processing Ext. of time) ☐ 1.18 Fees (Issue) ☐ Other _____ ☐ Credit

EAST Search History

EAST Search History (Prior Art)

Ref #	Hits	Search Query	DBs	Default Operator	Plurals	Time Stamp
L1	31	engine and ((dual double two second$4 plural$4 multi multiple bi) near2 fuel near20 (switch$4 chang$3)) and ((carburetor carburettor) same intake same valve) and (electric$4 near5 generat$4)	US-PGPUB; USPAT; USOCR; FPRS; EPO; JPO; DERWENT; IBM_TDB	OR	ON	2017/08/02 09:08
L2	32878	((F02D19/0647 OR F02D19/0613 OR F02D29/06 OR F02D41/0025 OR F02D11/02 OR F02D19/0642 OR F02D35/0053 OR F02B63/04 OR F02B43/00 OR F02B63/044 OR F02M13/08 OR F02M19/08 OR F02M21/047 OR F02N3/02).CPC.)	US-PGPUB; USPAT; USOCR; FPRS; EPO; JPO; DERWENT; IBM_TDB	OR	ON	2017/08/02 09:10
L3	7	engine and ((dual double two second$4 plural$4 multi multiple bi) near2 fuel near20 (switch$4 chang$3)) and ((carburetor carburettor) same intake same valve) and (solenoid near2 valve) and (valve same (rotat$4 near2 shaft) same (carburetor carburretor))	US-PGPUB; USPAT; USOCR; FPRS; EPO; JPO; DERWENT; IBM_TDB	OR	ON	2017/08/02 09:22
L4	2	engine and ((dual double two second$4 plural$4 multi multiple bi) near2 fuel near20 (switch$4 chang$3)) and ((carburetor carburettor) same intake same valve) and (solenoid near2 valve) and (valve same (rotat$4 near2 shaft) same (carburetor carburretor)) and (o adj ring)	US-PGPUB; USPAT; USOCR; FPRS; EPO; JPO; DERWENT; IBM_TDB	OR	ON	2017/08/02 09:33
L5	12	engine and ((dual double two second$4 plural$4 multi multiple bi) near2 fuel same (switch$4 chang$3)) and (valve same (rotat$4 near2 shaft) same (carburetor carburretor)) and (o adj ring)	US-PGPUB; USPAT; USOCR; FPRS; EPO; JPO; DERWENT; IBM_TDB	OR	ON	2017/08/02 09:35
S1	3	"14925441"	US-PGPUB; USPAT; USOCR; FPRS; EPO; JPO; DERWENT; IBM_TDB	OR	ON	2017/08/01 09:15
S2	38	engine and ((dual double two second$4 plural$4 multi multiple bi) near2 fuel near20 (switch$4 chang$3)) and ((lpg propane ng "natural gas" hydrogen) near5 fuel) and gasoline and ((carburetor carburettor) same intake same (solenoid nea5 valve))	US-PGPUB; USPAT; USOCR; FPRS; EPO; JPO; DERWENT; IBM_TDB	OR	ON	2017/08/01 09:34

S3	6	"14738060"	US-PGPUB; USPAT; USOCR; FPRS; EPO; JPO; DERWENT; IBM_TDB	OR	ON	2017/08/01 09:38
S4	2	engine and ((dual double two second$4 plural$4 multi multiple bi) near2 fuel near20 (switch$4 chang$3)) and ((lpg propane ng "natural gas" hydrogen) near5 fuel) and gasoline and ((carburetor carburettor) same (solenoid near5 valve)) and ((carburetor carburettor) same intake) and (pull adj start$4) and ((carburettor carburetor) same shaft same lever same (spring coil))	US-PGPUB; USPAT; USOCR; FPRS; EPO; JPO; DERWENT; IBM_TDB	OR	ON	2017/08/01 09:51
S5	2	engine and ((dual double two second$4 plural$4 multi multiple bi) near2 fuel near20 (switch$4 chang$3)) and ((lpg propane ng "natural gas" hydrogen) near5 fuel) and gasoline and ((carburetor carburettor) same (solenoid near5 valve)) and ((carburetor carburettor) same intake) and (pull adj start$4) and ((carburettor carburetor) same shaft same (spring coil))	US-PGPUB; USPAT; USOCR; FPRS; EPO; JPO; DERWENT; IBM_TDB	OR	ON	2017/08/01 09:54
S6	4	engine and ((dual double two second$4 plural$4 multi multiple bi) near2 fuel near20 (switch$4 chang$3)) and ((lpg propane ng "natural gas" hydrogen) near10 fuel) and gasoline and ((carburetor carburettor) same (solenoid near5 valve)) and ((carburetor carburettor) same intake) and ((carburettor carburetor) same shaft same (spring coil))	US-PGPUB; USPAT; USOCR; FPRS; EPO; JPO; DERWENT; IBM_TDB	OR	ON	2017/08/01 09:55
S7	26	engine and ((dual double two second$4 plural$4 multi multiple bi) near2 fuel near20 (switch$4 chang$3)) and ((lpg propane ng "natural gas" hydrogen) near10 fuel) and gasoline and ((carburetor carburettor) same intake) and (generat$4 same electric$4)	US-PGPUB; USPAT; USOCR; FPRS; EPO; JPO; DERWENT; IBM_TDB	OR	ON	2017/08/01 09:58
S8	2	engine and ((dual double two second$4 plural$4 multi multiple bi) near2 fuel same (switch$4 chang$3)) and ((lpg propane ng "natural gas" hydrogen) near10 fuel) and gasoline and ((carburetor carburettor)) and (generat$4 same electric$4) and (pull adj start$4)	US-PGPUB; USPAT; USOCR; FPRS; EPO; JPO; DERWENT; IBM_TDB	OR	ON	2017/08/01 11:12
S9	2	engine and ((dual double two second$4 plural$4 multi multiple bi) near2 fuel same (switch$4 chang$3)) and ((lpg propane ng "natural gas" hydrogen)) and gasoline and ((carburetor carburettor)) and (generat$4 same electric$4) and (pull adj start$4)	US-PGPUB; USPAT; USOCR; FPRS; EPO; JPO; DERWENT; IBM_TDB	OR	ON	2017/08/01 12:10
S10	7	engine and ((dual double two second$4 plural$4 multi multiple bi) near2 fuel same (switch$4 chang$3)) and ((carburetor carburettor)) and (generat$4	US-PGPUB; USPAT; USOCR; FPRS; EPO;	OR	ON	2017/08/01 12:37

		same electric$4) and (pull adj start$4)	JPO; DERWENT; IBM_TDB			
S11	15	engine and ((dual double two second$4 plural$4 multi multiple bi) near2 fuel same (switch$4 chang$3)) and ((carburetor carburettor)) and (generat$4 same electric$4) and ((pull adj start$4) or (recoil adj start$4))	US-PGPUB; USPAT; USOCR; FPRS; EPO; JPO; DERWENT; IBM_TDB	OR	ON	2017/08/01 13:10
S12	3	engine and ((dual double two second$4 plural$4 multi multiple bi) near2 fuel same (switch$4 chang$3)) and ((carburetor carburettor) same shaft same lever same (coil bias$4 spring)) and (generat$4 same electric$4) and ((pull adj start$4) or (recoil adj start$4))	US-PGPUB; USPAT; USOCR; FPRS; EPO; JPO; DERWENT; IBM_TDB	OR	ON	2017/08/01 13:14
S13	5	engine and ((dual double two second$4 plural$4 multi multiple bi) near2 fuel) and ((carburetor carburettor) same shaft same lever same (coil bias$4 spring)) and (generat$4 same electric$4) and ((pull adj start$4) or (recoil adj start$4))	US-PGPUB; USPAT; USOCR; FPRS; EPO; JPO; DERWENT; IBM_TDB	OR	ON	2017/08/01 13:25
S14	2	engine and ((dual double two second$4 plural$4 multi multiple bi) near2 fuel) and ((carburetor carburettor) same rotat$4 near2 shaft) and ((carburetor carburettor) same lever same (coil bias$4 spring)) and (generat$4 near5 electric$4) and ((pull adj start$4) or (recoil adj start$4)) and ((ope cable cord) near20 lever)	US-PGPUB; USPAT; USOCR; FPRS; EPO; JPO; DERWENT; IBM_TDB	OR	ON	2017/08/01 14:09
S15	2	engine and ((dual double two second$4 plural$4 multi multiple bi) near2 fuel) and (rotat$4 near2 shaft same lever) and ((carburetor carburettor) same lever same (coil bias$4 spring)) and (generat$4 near5 electric$4) and ((pull adj start$4) or (recoil adj start$4)) and ((ope cable cord) near20 lever)	US-PGPUB; USPAT; USOCR; FPRS; EPO; JPO; DERWENT; IBM_TDB	OR	ON	2017/08/01 14:16
S16	2	engine and ((dual double two second$4 plural$4 multi multiple bi) near2 fuel) and (rotat$4 near2 shaft same lever) and ((carburetor carburettor) same lever same (coil bias$4 spring)) and (generat$4 near5 electric$4) and ((pull adj start$4) or (recoil adj start$4)) and ((rope cable cord) same lever)	US-PGPUB; USPAT; USOCR; FPRS; EPO; JPO; DERWENT; IBM_TDB	OR	ON	2017/08/01 14:23
S17	34	engine and ((dual double two second$4 plural$4 multi multiple bi) near2 fuel) and (carburetor carburettor) and (generat$4 near5 electric$4) and ((pull adj start$4) or (recoil adj start$4))	US-PGPUB; USPAT; USOCR; FPRS; EPO; JPO; DERWENT; IBM_TDB	OR	ON	2017/08/01 14:32
S18	5	engine and ((dual double two second$4 plural$4 multi multiple bi) near2 fuel) and (carburetor carburettor) same solenoid adj valve and (generat$4 near5 electric$4) and ((pull adj start$4) or (recoil adj start$4))	US-PGPUB; USPAT; USOCR; FPRS; EPO; JPO; DERWENT;	OR	ON	2017/08/01 14:32

			IBM_TDB			
S19	19	engine and ((dual double two second$4 plural$4 multi multiple bi) near2 fuel) and (carburetor carburettor) same valve and (generat$4 near5 electric$4) and ((pull adj start$4) or (recoil adj start$4))	US-PGPUB; USPAT; USOCR; FPRS; EPO; JPO; DERWENT; IBM_TDB	OR	ON	2017/08/01 15:11
S20	10	S19 not battery	US-PGPUB; USPAT; USOCR; FPRS; EPO; JPO; DERWENT; IBM_TDB	OR	ON	2017/08/01 15:13
S21	7	engine and ((dual double two second$4 plural$4 multi multiple bi) near2 fuel near50 (switch$4 chang$4)) and (carburetor carburettor) same valve and (generat$4 near5 electric$4) and ((pull near2 start$4) or (recoil adj start$4))	US-PGPUB; USPAT; USOCR; FPRS; EPO; JPO; DERWENT; IBM_TDB	OR	ON	2017/08/01 15:17
S22	2	engine same ((dual plural$4 multi multiple bi) near2 fuel) and (carburetor carburettor) same valve and (generat$4 near5 electric$4) and ((pull near2 start$4) or (recoil adj start$4)) and ((magneto or alternator) same solenoid near2 valve)	US-PGPUB; USPAT; USOCR; FPRS; EPO; JPO; DERWENT; IBM_TDB	OR	ON	2017/08/01 15:40
S23	0	engine and (carburetor carburettor) same valve and (generat$4 near5 electric$4) and ((pull near2 start$4) or (recoil adj start$4)) and ((magneto or alternator) same solenoid near2 valve same (voltatage near5 regulat$4))	US-PGPUB; USPAT; USOCR; FPRS; EPO; JPO; DERWENT; IBM_TDB	OR	ON	2017/08/01 15:45
S24	2	engine and (carburetor carburettor) same valve and (generat$4 near5 electric$4) and ((pull near2 start$4) or (recoil adj start$4)) and ((magneto or alternator) same solenoid near2 valve same (voltage near5 regulat$4))	US-PGPUB; USPAT; USOCR; FPRS; EPO; JPO; DERWENT; IBM_TDB	OR	ON	2017/08/01 15:45
S25	7	engine and (carburetor carburettor) same valve and (generat$4 near5 electric$4) and ((magneto or alternator) same solenoid near2 valve same (voltage near5 regulat$4))	US-PGPUB; USPAT; USOCR; FPRS; EPO; JPO; DERWENT; IBM_TDB	OR	ON	2017/08/01 15:46
S26	5	engine and (carburetor carburettor) same valve and (generat$4 near5 electric$4) and (magnetic$4 same solenoid near2 valve same (voltage near5 regulat$4))	US-PGPUB; USPAT; USOCR; FPRS; EPO; JPO; DERWENT; IBM_TDB	OR	ON	2017/08/01 15:55
S27	87	engine and (carburetor carburettor) same valve and (generat$4 near5 electric$4) and (magnetic$4 same solenoid near2 valve)	US-PGPUB; USPAT; USOCR; FPRS; EPO;	OR	ON	2017/08/01 15:55

			JPO; DERWENT; IBM_TDB			
S28	47	engine and (carburetor carburettor) same valve and (generat$4 near5 electric$4) and (magnetic$4 same (spring coil) same solenoid near2 valve)	US-PGPUB; USPAT; USOCR; FPRS; EPO; JPO; DERWENT; IBM_TDB	OR	ON	2017/08/01 15:56
S29	27	engine and (carburetor carburettor) same solenoid adj valve and (generat$4 near5 electric$4) and (magnetic$4 same (spring coil) same solenoid near2 valve)	US-PGPUB; USPAT; USOCR; FPRS; EPO; JPO; DERWENT; IBM_TDB	OR	ON	2017/08/01 16:00
S30	0	engine and ((carburetor carburettor) near50 solenoid adj valve) and ((solenoid adj valve) same (rotat$4 near2 shaft) same seal$4 same (block$4 (valve near2 tip))) and ((carburetor carburretor) same lever same (spring coil bias$4) same (cable rope cord))	US-PGPUB; USPAT; USOCR; FPRS; EPO; JPO; DERWENT; IBM_TDB	OR	ON	2017/08/01 16:34
S31	0	engine and ((carburetor carburettor) near50 solenoid adj valve) and ((solenoid adj valve) same (rotat$4 near2 shaft) same (o adj ring)) and ((lever valve) same (block$4 (valve near2 tip))) and ((carburetor carburretor) same lever same (spring coil bias$4) same (cable rope cord))	US-PGPUB; USPAT; USOCR; FPRS; EPO; JPO; DERWENT; IBM_TDB	OR	ON	2017/08/01 16:36
S32	0	engine and ((carburetor carburettor) near50 solenoid adj valve) and (valve same (rotat$4 near2 shaft) same (o adj ring)) and ((lever valve) same (block$4 (valve near2 tip))) and ((carburetor carburretor) same lever same (spring coil bias$4)) and (cable rope cord)	US-PGPUB; USPAT; USOCR; FPRS; EPO; JPO; DERWENT; IBM_TDB	OR	ON	2017/08/01 16:50
S33	0	engine and ((carburetor carburettor) near50 solenoid adj valve) and (valve same (rotat$4 near2 shaft) same (o adj ring)) and ((lever valve) same (block$4 (valve near2 tip))) and ((carburetor carburretor) same lever same (spring coil bias$4)) and (cable rope cord) near50 lever	US-PGPUB; USPAT; USOCR; FPRS; EPO; JPO; DERWENT; IBM_TDB	OR	ON	2017/08/01 16:50
S34	1	engine and ((carburetor carburettor) near50 solenoid adj valve) and (valve same (rotat$4 near2 shaft) same (o adj ring)) and ((lever valve) same (block$4 (valve near2 tip))) and ((carburetor carburretor) same lever)	US-PGPUB; USPAT; USOCR; FPRS; EPO; JPO; DERWENT; IBM_TDB	OR	ON	2017/08/01 16:51
S35	0	engine and ((carburetor carburettor) near50 solenoid adj valve) and (solenoid adj valve same (rotat$4 near2 shaft) same (o adj ring)) and ((carburetor carburretor) same lever)	US-PGPUB; USPAT; USOCR; FPRS; EPO; JPO; DERWENT; IBM_TDB	OR	ON	2017/08/01 16:54

S36	0	engine and ((carburetor carburettor) near50 solenoid adj valve) and (solenoid adj valve same (rotat$4 near2 shaft) same (o adj ring))	US-PGPUB; USPAT; USOCR; FPRS; EPO; JPO; DERWENT; IBM_TDB	OR	ON	2017/08/01 16:55
S37	0	engine and ((carburetor carburettor) near50 solenoid adj valve) and ((carburettor carburetor) same (rotat$4 near2 shaft) same (o adj ring)) and ((lever valve) same (block$4 (valve near2 tip))) and ((carburetor carburretor) same lever)	US-PGPUB; USPAT; USOCR; FPRS; EPO; JPO; DERWENT; IBM_TDB	OR	ON	2017/08/01 16:56
S38	0	engine and ((carburetor carburettor) near50 solenoid adj valve) and ((carburettor carburetor) same (rotat$4 near2 shaft) same (o adj ring)) and ((carburetor carburretor) same lever)	US-PGPUB; USPAT; USOCR; FPRS; EPO; JPO; DERWENT; IBM_TDB	OR	ON	2017/08/01 16:57

8/ 2/ 2017 9:52:31 AM
C:\ Users\ ltran2\ Documents\ EAST\ Workspaces\ 14925441.wsp

Doc code: IDS
Doc description: Information Disclosure Statement (IDS) Filed

PTO/SB/08a (01-10)
Approved for use through 07/31/2012. OMB 0651-0031
U.S. Patent and Trademark Office; U.S. DEPARTMENT OF COMMERCE
Under the Paperwork Reduction Act of 1995, no persons are required to respond to a collection of information unless it contains a valid OMB control number

INFORMATION DISCLOSURE STATEMENT BY APPLICANT

(Not for submission under 37 CFR 1.99)

Application Number	
Filing Date	
First Named Inventor	Kendall J. Collie et al.
Art Unit	
Examiner Name	
Attorney Docket Number	CET1090.042

U.S.PATENTS						Remove
Examiner Initial*	Cite No	Patent Number	Kind Code[1]	Issue Date	Name of Patentee or Applicant of cited Document	Pages,Columns,Lines where Relevant Passages or Relevant Figures Appear
/L.T.T/	1	2722208		1955-11-01	Conroy, Jr. et al.	
/L.T.T/	2	4372276		1983-02-08	Bernhardsson et al.	
/L.T.T/	3	4450821		1984-05-29	Venning et al.	
/L.T.T/	4	4489699		1984-12-25	Poehlman	
/L.T.T/	5	4502453		1985-03-05	Kabasin et al.	
/L.T.T/	6	4619240		1986-10-28	Bedford et al.	
/L.T.T/	7	4895124		1990-01-23	Bartholomew	
/L.T.T/	8	5171487		1992-12-15	Hudz	

ALL REFERENCES CONSIDERED EXCEPT WHERE LINED THROUGH. /L.T.T/

INFORMATION DISCLOSURE STATEMENT BY APPLICANT (Not for submission under 37 CFR 1.99)		
	Application Number	
	Filing Date	
	First Named Inventor	Kendall J. Collie et al.
	Art Unit	
	Examiner Name	
	Attorney Docket Number	CET1090.042

/L.T.T/	9	5287839		1994-02-22	Kondou et al.	
/L.T.T/	10	5320078		1994-06-14	Lorraine	
/L.T.T/	11	5379740		1995-01-10	Moore et al.	
/L.T.T/	12	5419291		1995-05-30	Kimata et al.	
/L.T.T/	13	5438968		1995-08-08	Johnson et al.	
/L.T.T/	14	5450832		1995-09-19	Graf	
/L.T.T/	15	5673670		1997-10-07	Powell et al.	
/L.T.T/	16	5816224		1998-10-06	Welsh et al.	
/L.T.T/	17	6082323		2000-07-04	Winberg	
/L.T.T/	18	6213083	B1	2001-04-10	Winberg	
/L.T.T/	19	6223730	B1	2001-05-01	Hasegawa et al.	

ALL REFERENCES CONSIDERED EXCEPT WHERE LINED THROUGH. /L.T.T/

INFORMATION DISCLOSURE STATEMENT BY APPLICANT (Not for submission under 37 CFR 1.99)		
	Application Number	
	Filing Date	
	First Named Inventor	Kendall J. Collie et al.
	Art Unit	
	Examiner Name	
	Attorney Docket Number	CET1090.042

/L.T.T/	20	6276345	B1	2001-08-21	Nelson et al.	
/L.T.T/	21	6401685	B1	2002-06-11	Warner	
/L.T.T/	22	6453877	B1	2002-09-24	Lucier et al.	
/L.T.T/	23	6914342	B1	2005-07-05	French	
/L.T.T/	24	7905469	B2	2011-03-15	Nickels et al.	
/L.T.T/	25	8342158	B2	2013-01-01	Ulrey et al.	
/L.T.T/	26	8590510	B2	2013-11-26	Surnilla et al.	
/L.T.T/	27	5161496		1992-11-10	Matsushima et al.	
/L.T.T/	28	5325835		1994-07-05	Kimata et al.	

If you wish to add additional U.S. Patent citation information please click the Add button. Add

U.S.PATENT APPLICATION PUBLICATIONS Remove

Examiner Initial*	Cite No	Publication Number	Kind Code[1]	Publication Date	Name of Patentee or Applicant of cited Document	Pages,Columns,Lines where Relevant Passages or Relevant Figures Appear

ALL REFERENCES CONSIDERED EXCEPT WHERE LINED THROUGH. /L.T.T/

INFORMATION DISCLOSURE STATEMENT BY APPLICANT (Not for submission under 37 CFR 1.99)		
	Application Number	
	Filing Date	
	First Named Inventor	Kendall J. Collie et al.
	Art Unit	
	Examiner Name	
	Attorney Docket Number	CET1090.042

/L.T.T/	1	20130047964	A1	2013-02-28	Kim	
/L.T.T/	2	20130220274	A1	2013-08-29	Deshpande et al.	

If you wish to add additional U.S. Published Application citation information please click the Add button. Add

FOREIGN PATENT DOCUMENTS Remove

Examiner Initial*	Cite No	Foreign Document Number[3]	Country Code[2] i	Kind Code[4]	Publication Date	Name of Patentee or Applicant of cited Document	Pages,Columns,Lines where Relevant Passages or Relevant Figures Appear	T[5]
	1							☐

If you wish to add additional Foreign Patent Document citation information please click the Add button Add

NON-PATENT LITERATURE DOCUMENTS Remove

Examiner Initials*	Cite No	Include name of the author (in CAPITAL LETTERS), title of the article (when appropriate), title of the item (book, magazine, journal, serial, symposium, catalog, etc), date, pages(s), volume-issue number(s), publisher, city and/or country where published.	T[5]
/L.T.T/	1	Honda EU20i LPG, March 20, 2012, https://www.youtube.com/watch?v=yBpq33aJmR0	☐
/L.T.T/	2	JOHNSON et al., "Electronic Direct Fuel Injection (EDFI) for Small Two-Stroke Engines," SAE Technical Paper 1999-01-3312, Proceedings of the 1999 SAE Small Engine Technology Conference, Madison, WI, September 28-30, 1999, pp. 1-15	☐

If you wish to add additional non-patent literature document citation information please click the Add button Add

EXAMINER SIGNATURE

Examiner Signature	/LONG T TRAN/	Date Considered	08/02/2017

*EXAMINER: Initial if reference considered, whether or not citation is in conformance with MPEP 609. Draw line through a citation if not in conformance and not considered. Include copy of this form with next communication to applicant.

INFORMATION DISCLOSURE STATEMENT BY APPLICANT (Not for submission under 37 CFR 1.99)		
	Application Number	
	Filing Date	
	First Named Inventor	Kendall J. Collie et al.
	Art Unit	
	Examiner Name	
	Attorney Docket Number	CET1090.042

[1] See Kind Codes of USPTO Patent Documents at www.USPTO.GOV or MPEP 901.04. [2] Enter office that issued the document, by the two-letter code (WIPO Standard ST.3). [3] For Japanese patent documents, the indication of the year of the reign of the Emperor must precede the serial number of the patent document. [4] Kind of document by the appropriate symbols as indicated on the document under WIPO Standard ST.16 if possible. [5] Applicant is to place a check mark here if English language translation is attached.

ALL REFERENCES CONSIDERED EXCEPT WHERE LINED THROUGH. /L.T.T./

INFORMATION DISCLOSURE STATEMENT BY APPLICANT

(Not for submission under 37 CFR 1.99)

Application Number	
Filing Date	
First Named Inventor	Kendall J. Collie et al.
Art Unit	
Examiner Name	
Attorney Docket Number	CET1090.042

CERTIFICATION STATEMENT

Please see 37 CFR 1.97 and 1.98 to make the appropriate selection(s):

☐ That each item of information contained in the information disclosure statement was first cited in any communication from a foreign patent office in a counterpart foreign application not more than three months prior to the filing of the information disclosure statement. See 37 CFR 1.97(e)(1).

OR

☐ That no item of information contained in the information disclosure statement was cited in a communication from a foreign patent office in a counterpart foreign application, and, to the knowledge of the person signing the certification after making reasonable inquiry, no item of information contained in the information disclosure statement was known to any individual designated in 37 CFR 1.56(c) more than three months prior to the filing of the information disclosure statement. See 37 CFR 1.97(e)(2).

☐ See attached certification statement.

☐ The fee set forth in 37 CFR 1.17 (p) has been submitted herewith.

☐ A certification statement is not submitted herewith.

SIGNATURE

A signature of the applicant or representative is required in accordance with CFR 1.33, 10.18. Please see CFR 1.4(d) for the form of the signature.

Signature	/Timothy J. Ziolkowski/	Date (YYYY-MM-DD)	2015-10-28
Name/Print	Timothy J. Ziolkowski	Registration Number	38368

This collection of information is required by 37 CFR 1.97 and 1.98. The information is required to obtain or retain a benefit by the public which is to file (and by the USPTO to process) an application. Confidentiality is governed by 35 U.S.C. 122 and 37 CFR 1.14. This collection is estimated to take 1 hour to complete, including gathering, preparing and submitting the completed application form to the USPTO. Time will vary depending upon the individual case. Any comments on the amount of time you require to complete this form and/or suggestions for reducing this burden, should be sent to the Chief Information Officer, U.S. Patent and Trademark Office, U.S. Department of Commerce, P.O. Box 1450, Alexandria, VA 22313-1450. DO NOT SEND FEES OR COMPLETED FORMS TO THIS ADDRESS. **SEND TO: Commissioner for Patents, P.O. Box 1450, Alexandria, VA 22313-1450.**

ALL REFERENCES CONSIDERED EXCEPT WHERE LINED THROUGH. /L.T.T./

Privacy Act Statement

The Privacy Act of 1974 (P.L. 93-579) requires that you be given certain information in connection with your submission of the attached form related to a patent application or patent. Accordingly, pursuant to the requirements of the Act, please be advised that: (1) the general authority for the collection of this information is 35 U.S.C. 2(b)(2); (2) furnishing of the information solicited is voluntary; and (3) the principal purpose for which the information is used by the U.S. Patent and Trademark Office is to process and/or examine your submission related to a patent application or patent. If you do not furnish the requested information, the U.S. Patent and Trademark Office may not be able to process and/or examine your submission, which may result in termination of proceedings or abandonment of the application or expiration of the patent.

The information provided by you in this form will be subject to the following routine uses:

1. The information on this form will be treated confidentially to the extent allowed under the Freedom of Information Act (5 U.S.C. 552) and the Privacy Act (5 U.S.C. 552a). Records from this system of records may be disclosed to the Department of Justice to determine whether the Freedom of Information Act requires disclosure of these record s.

2. A record from this system of records may be disclosed, as a routine use, in the course of presenting evidence to a court, magistrate, or administrative tribunal, including disclosures to opposing counsel in the course of settlement negotiations.

3. A record in this system of records may be disclosed, as a routine use, to a Member of Congress submitting a request involving an individual, to whom the record pertains, when the individual has requested assistance from the Member with respect to the subject matter of the record.

4. A record in this system of records may be disclosed, as a routine use, to a contractor of the Agency having need for the information in order to perform a contract. Recipients of information shall be required to comply with the requirements of the Privacy Act of 1974, as amended, pursuant to 5 U.S.C. 552a(m).

5. A record related to an International Application filed under the Patent Cooperation Treaty in this system of records may be disclosed, as a routine use, to the International Bureau of the World Intellectual Property Organization, pursuant to the Patent Cooperation Treaty.

6. A record in this system of records may be disclosed, as a routine use, to another federal agency for purposes of National Security review (35 U.S.C. 181) and for review pursuant to the Atomic Energy Act (42 U.S.C. 218(c)).

7. A record from this system of records may be disclosed, as a routine use, to the Administrator, General Services, or his/her designee, during an inspection of records conducted by GSA as part of that agency's responsibility to recommend improvements in records management practices and programs, under authority of 44 U.S.C. 2904 and 2906. Such disclosure shall be made in accordance with the GSA regulations governing inspection of records for this purpose, and any other relevant (i.e., GSA or Commerce) directive. Such disclosure shall not be used to make determinations about individuals.

8. A record from this system of records may be disclosed, as a routine use, to the public after either publication of the application pursuant to 35 U.S.C. 122(b) or issuance of a patent pursuant to 35 U.S.C. 151. Further, a record may be disclosed, subject to the limitations of 37 CFR 1.14, as a routine use, to the public if the record was filed in an application which became abandoned or in which the proceedings were terminated and which application is referenced by either a published application, an application open to public inspections or an issued patent.

9. A record from this system of records may be disclosed, as a routine use, to a Federal, State, or local law enforcement agency, if the USPTO becomes aware of a violation or potential violation of law or regulation.

Index of Claims	Application/Control No.	Applicant(s)/Patent Under Reexamination
	14925441	COLLIE ET AL.
	Examiner	**Art Unit**
	LONG T TRAN	3747

✓	Rejected	-	Cancelled	N	Non-Elected	A	Appeal
=	Allowed	÷	Restricted	I	Interference	O	Objected

☐ Claims renumbered in the same order as presented by applicant ☐ CPA ☐ T.D. ☐ R.1.47

CLAIM		DATE								
Final	Original	04/18/2017	08/02/2017							
	1	÷	✓							
	2	÷	✓							
	3	÷	✓							
	4	÷	✓							
	5	÷	✓							
	6	÷	✓							
	7	÷	✓							
	8	÷	✓							
	9	÷	✓							
	10	÷	✓							
	11	÷	✓							
	12	÷	✓							
	13	÷	✓							
	14	÷	✓							
	15	÷	✓							
	16	÷	✓							
	17	÷	✓							
	18	÷	✓							
	19	÷	N							
	20	÷	N							
	21	÷	N							
	22	÷	N							
	23	÷	N							
	24	÷	N							
	25	÷	N							
	26	÷	N							
	27	÷	N							
	28	÷	N							
	29	÷	N							
	30	÷	N							
	31	÷	N							
	32	÷	N							
	33	÷	N							
	34	÷	N							
	35	÷	N							
	36	÷	N							

Index of Claims	Application/Control No.	Applicant(s)/Patent Under Reexamination
	14925441	COLLIE ET AL.
	Examiner	**Art Unit**
	LONG T TRAN	3747

✓	Rejected	-	Cancelled	N	Non-Elected	A	Appeal
=	Allowed	÷	Restricted	I	Interference	O	Objected

☐ Claims renumbered in the same order as presented by applicant ☐ CPA ☐ T.D. ☐ R.1.47

CLAIM		DATE								
Final	Original	04/18/2017	08/02/2017							
	37	÷	N							
	38	÷	N							
	39	÷	N							
	40	÷	N							
	41	÷	N							
	42	÷	N							
	43	÷	N							
	44	÷	N							
	45	÷	N							
	46	÷	N							
	47	÷	N							
	48	÷	N							
	49	÷	N							
	50	÷	N							
	51	÷	N							
	52	÷	N							
	53	÷	N							
	54	÷	N							
	55	÷	N							
	56	÷	✓							
	57	÷	✓							
	58	÷	N							
	59	÷	N							
	60	÷	✓							
	61	÷	✓							
	62	÷	N							
	63	÷	N							

PLUS Search Results for S/N 14925441, Searched Tue Aug 01 13:20:31 EDT 2017

The Patent Linguistics Utility System (PLUS) is a USPTO automated search system for U.S. Patents from 1971 to the present PLUS is a query-by-example search system which produces a list of patents that are most closely related linguistically to the application searched. This search was prepared by the staff of the Scientific and Technical Information Center, SIRA.

4411243 99
5655505 99
4244328 99
4312317 99
4340013 99
4350133 99
4364364 99
4438749 99
4458654 99
4550691 99
4600418 99
4829957 99
4836173 99
5226400 99
5322046 99
5343848 99
5433176 99
5545357 99
5546919 99
5575266 99
5588416 99
5601059 99
5606956 99
5767613 99
5769059 99
6145482 99
6167850 99
6189523 99
4244918 98
4300482 98
4308843 98
4318383 98
4322383 98
4325343 98
4341194 98
4369751 98
4372155 98
4387689 98
4395998 98
4412521 98
4425898 98
4444169 98
4453523 98
4483307 98
4483305 98
4492207 98
4497304 98
4515134 98
4531497 98
4545356 98

Customer No. 26629
Confirmation No. 1059

Patent
Attorney Docket No. CET1090.042

IN THE UNITED STATES PATENT AND TRADEMARK OFFICE

In re Application of	:	Collie et al.
Serial No.	:	14/925,441
Filed	:	October 28, 2015
For	:	BATTERYLESS DUAL FUEL ENGINE WITH LIQUID FUEL CUT-OFF
Group Art No.	:	3747
Examiner	:	Long T Tran

CERTIFICATION UNDER 37 CFR 1.8(a) and 1.10

I hereby certify that, on the date shown below, this correspondence is being:

Mailing

☐ deposited with the US Postal Service in an envelope addressed to Commissioner for Patents, P.O. Box 1450, Alexandria, VA 22313-1450

37 CFR 1.8(a)
☐ with sufficient postage as first class mail

37 CFR 1.10
☐ As "Express Mail Post Office to Addressee" Mailing Label No.

Transmission

☐ transmitted by facsimile to Fax No.: 571-273-8300 addressed to **Examiner Lon T Tran** at the Patent and Trademark Office.

■ transmitted by EFS-WEB addressed to **Examiner Long T Tran** at the Patent and Trademark Office.

Date: June 21, 2017

/Robyn L. Templin/
Signature

Commissioner for Patents
P.O. Box 1450
Alexandria, VA 22313-1450

RESPONSE TO APRIL 21, 2017 RESTRICTION REQUIREMENT

Dear Sir:

Responsive to the Restriction Requirement mailed April 21, 2017, please enter the following election with traverse and consider the following comments in support of rejoinder.

Electronic Acknowledgement Receipt

EFS ID:	29561766
Application Number:	14925441
International Application Number:	
Confirmation Number:	1059
Title of Invention:	BATTERYLESS DUAL FUEL ENGINE WITH LIQUID FUEL CUT-OFF
First Named Inventor/Applicant Name:	Kendall J. Collie
Customer Number:	26629
Filer:	Kevin Roger Rosin./Robyn Templin
Filer Authorized By:	Kevin Roger Rosin.
Attorney Docket Number:	CET1090.042
Receipt Date:	21-JUN-2017
Filing Date:	28-OCT-2015
Time Stamp:	12:22:27
Application Type:	Utility under 35 USC 111(a)

Payment information:

Submitted with Payment	no

File Listing:

Document Number	Document Description	File Name	File Size(Bytes)/ Message Digest	Multi Part /.zip	Pages (if appl.)
1		Response.pdf	159521 edc7886f728dbf74f7e8da506aa3fd8d1055df58	yes	13

	Multipart Description/PDF files in .zip description		
	Document Description	**Start**	**End**
	Applicant Arguments/Remarks Made in an Amendment	11	13
	Claims	2	10
	Response to Election / Restriction Filed	1	1
Warnings:			
Information:			
	Total Files Size (in bytes):	159521	

This Acknowledgement Receipt evidences receipt on the noted date by the USPTO of the indicated documents, characterized by the applicant, and including page counts, where applicable. It serves as evidence of receipt similar to a Post Card, as described in MPEP 503.

New Applications Under 35 U.S.C. 111
If a new application is being filed and the application includes the necessary components for a filing date (see 37 CFR 1.53(b)-(d) and MPEP 506), a Filing Receipt (37 CFR 1.54) will be issued in due course and the date shown on this Acknowledgement Receipt will establish the filing date of the application.
National Stage of an International Application under 35 U.S.C. 371
If a timely submission to enter the national stage of an international application is compliant with the conditions of 35 U.S.C. 371 and other applicable requirements a Form PCT/DO/EO/903 indicating acceptance of the application as a national stage submission under 35 U.S.C. 371 will be issued in addition to the Filing Receipt, in due course.
New International Application Filed with the USPTO as a Receiving Office
If a new international application is being filed and the international application includes the necessary components for an international filing date (see PCT Article 11 and MPEP 1810), a Notification of the International Application Number and of the International Filing Date (Form PCT/RO/105) will be issued in due course, subject to prescriptions concerning national security, and the date shown on this Acknowledgement Receipt will establish the international filing date of the application.

ELECTION

Applicant elects, with traverse, what the Examiner has characterized as "Invention I", deemed drawn to a dual fuel engine, and corresponding to claims 1-18, 56-57, and 60-61.

REMARKS

The Examiner has identified four 'inventions' in the pending claims. The Examiner's classification of the 'inventions' include Group I consisting of claims 1-18, 56-57, and 60-61 drawn to a dual fuel engine and classified by the Examiner in class F02D 19/06, Group II consisting of claims 19-34, 58-59, and 62-63 drawn to a generator and classified by the Examiner in class F02B 63/04, Group III consisting of claims 35-47 drawn to a carburetor and classified by the Examiner in class F02M 17/20, and Group IV consisting of claims 48-55 drawn to a process of making an engine and classified by the Examiner in class B23P 19/042. *Restriction Requirement*, 4/21/17, p. 2

Restriction of Groups I, II, III, and IV

The Examiner asserted in the Restriction Requirement that alleged "Inventions I, II, III and IV are directed to related internal combustion engines," but that the "inventions are distinct, each from the other," and issued a restriction under MPEP § 806.05(j). *Restriction Requirement*, p. 2. MPEP § 806.05(j)states that "[t]o support a requirement for restriction between two or more related product inventions, or between two or more related process inventions, both two-way distinctness and reasons for insisting on restriction are necessary." *Id.* at § 806.05(j). Related product or process inventions are only distinct if "(A) the inventions *as claimed* do not overlap in scope, i.e., are mutually exclusive; (B) the inventions *as claimed* are not obvious variants; and (C) the inventions *as claimed* are either not capable of use together or can have a materially different design, mode of operation, function, or effect." *Id.* (emphasis in original). "The burden is on the examiner to provide an example to support the determination that the inventions are distinct." *Id.*

In this case, the Examiner has failed to meet the burden set forth by MPEP § 806.05(j)(A)-(C). That is, in order to show that alleged Inventions I-IV are distinct as claimed, the Examiner must prove that each alleged invention is (A) mutually exclusive; (B) not obvious variants, **and** (C) "not capable of use together or can have a materially different design, mode of operation, function, or effect." *See Id.* at § 806.05(j)(A)-(C). The Examiner did not prove each of (A)-(C), but instead merely made conclusory statements that "[i]n the instant case, the inventions as claimed have a materially different design, mode of operation, function, or effect.

Champion - EX2082, Page 464 of 575
Harbor Freight Tools USA Inc. et al v. Champion Power Equip., Inc.
IPR2025-01121

Furthermore, the inventions as claimed do not encompass overlapping subject matter and there is nothing of record to show them to be obvious variants." *Restriction Requirement*, p. 2-3. The Examiner did not cite to any claim elements to support that conclusion. Further, the Examiner did not provide an example to support the determination that alleged Inventions I-IV are distinct, as required by MPEP § 806.05(j).

However, regardless of the deficiency of the restriction, alleged Inventions I, II, III, and IV, as claimed in independent claims 1, 19, 35, and 48 are not distinct for at least the reason that they overlap in scope. *See* MPEP § 806.05(j)(A). Each of claims 1, 19, 35 and 48 directed to alleged Inventions I, II, III, and IV, respectively, include a carburetor and either a fuel shutoff or a fuel cut-off attached to the carburetor. In addition, each of claims 19, 35, and 48 directed to alleged Inventions II, III, and IV include that the carburetor has a float bowl, a throat, and a fuel passage to provide fuel from the float bowl to the throat. Claims 19, 35, and 48 also include that the fuel shutoff or fuel cut-off attaches to the carburetor to close the fuel passage. In comparison, claim 6 of alleged Invention I includes a fuel path to the engine that is opened and closed by the fuel cut-off. As such, all of alleged Inventions I, II, III, and IV include a carburetor and a fuel shutoff/cut-off that attaches to the carburetor to close a fuel passage/path.

In addition, alleged Inventions I, II, and IV, as claimed in independent claims 1, 19, and 48, respectively, are not distinct since they overlap in scope regarding the carburetor attached to an intake of an engine. Each of claims 1, 19, and 48 include an engine operable on a gaseous fuel and a liquid fuel. Also, claims 1, 30, and 48 directed to alleged Inventions I, II, and IV, respectively, all include a switch to change operation of the engine between gaseous fuel and liquid fuel. Furthermore, claim 1 (alleged Invention I) includes the liquid fuel cut-off attached to the carburetor to interrupt liquid fuel upon actuation of the switch from liquid fuel to gaseous fuel. Claim 19 (alleged Invention II) includes the fuel shutoff attached to the carburetor to close the fuel passage upon selection of engine operation to gaseous fuel. Claim 48 (alleged Invention IV) includes attaching a liquid fuel cut-off to the carburetor to close the fuel passage upon actuation of the switch from liquid fuel to gaseous fuel. Therefore, each of alleged Invention I, II, and IV as claimed in independent claims 1, 19, and 48, respectively, include that the fuel shutoff/cut-off attaches to the carburetor to interrupt liquid fuel or close a liquid fuel passage upon selection of engine operation to gaseous fuel.

All of alleged Inventions I, II, III, and IV as claimed in claims 15, 25, 44, 55, respectively, also include a cable actuated fuel shutoff/cut-off. Initially, each of claims 14, 21, 37, and 53 directed to alleged Inventions I, II, III, and IV, respectively, include a rotating shaft extending through an aperture or opening in the carburetor, and either a blocking member or a

Champion - EX2082, Page 465 of 575
Harbor Freight Tools USA Inc. et al v. Champion Power Equip., Inc.
IPR2025-01121

valve member couples to the shaft in the carburetor that rotates to selectively control fuel flow through a fuel passage/path within the carburetor. Furthermore, each of alleged Inventions I, II, III, IV (via claims 14, 26, 42, 52, respectively) includes a fuel seal around the shaft for the aperture or opening in the carburetor. Each of alleged Inventions I, II, III, IV (via claims 15, 25, 44, 55, respectively) includes a lever coupled to the shaft, and a cable couples to the lever to actuate the blocking/valve member. Therefore, as claimed, alleged Invention I, II, III, and IV overlap in scope and cannot be said to be mutually exclusive under MPEP § 806.05(j).

In light of the above, alleged Invention I, II, III, and IV as claimed in claims 1-18, 56-57, 60-61; claims 19-34, 58-59, 62-63; claims 35-47; and claims 48-55; respectively, are not distinct. The Examiner has not met the burdens set forth by MPEP § 806.05(j) to show that alleged Inventions I-IV, as claimed, are distinct, as the Examiner has not shown that the alleged inventions are mutually exclusive, not obvious variants, **and** not capable of use together / have a materially different design, mode of operation, function, or effect. On the contrary, alleged Inventions I-IV, as called for in the claims, are related under the present disclosure and overlap in scope. Accordingly, Applicant respectfully requests that the restriction between alleged Inventions I, II, III, and IV be withdrawn.

Conclusion

For all these reasons, Applicant respectfully requests rejoinder of all claims, of each group. The Examiner is invited to call the undersigned to discuss this Election or any other matters regarding this application to further prosecution.

Respectfully submitted,

/Kevin R. Rosin/

Kevin R. Rosin
Registration No. 55,584
Phone 262-268-8100
krr@zpspatents.com

Dated: June 21, 2017
Attorney Docket No.: CET1090.042

P.O. ADDRESS:
Ziolkowski Patent Solutions Group, SC
136 South Wisconsin Street
Port Washington, WI 53074
262-268-8100

Champion - EX2082, Page 466 of 575
Harbor Freight Tools USA Inc. et al v. Champion Power Equip., Inc.
IPR2025-01121

IN THE CLAIMS:

1. (Original) A dual fuel engine comprising:

an engine operable on a gaseous fuel and a liquid fuel;

a switch to change operation of the engine between gaseous fuel and liquid fuel;

a carburetor attached to an intake of the engine to mix air and fuel and connect to a gaseous fuel source and a liquid fuel source; and

a liquid fuel cut-off attached to the carburetor to interrupt liquid fuel upon actuation of the switch from liquid fuel to gaseous fuel.

2. (Original) The dual fuel engine of claim 1, wherein the engine is a pull start, batteryless engine.

3. (Original) The dual fuel engine of claim 1, wherein the gaseous fuel is LPG and the liquid fuel is gasoline.

4. (Original) The dual fuel engine of claim 1 further comprising:

a liquid fuel valve along a liquid fuel line coupling the liquid fuel source to the carburetor; and

a gaseous fuel valve along a gaseous fuel line coupling the gaseous fuel source to the carburetor.

5. (Original) The dual fuel engine of claim 1, wherein the engine is a pull-start engine having an electrical power generator to supply electrical power.

6. (Original) The dual fuel engine of claim 5, wherein the switch is an electro-mechanical switch connecting one fuel source to the carburetor and connected to the electrical power generator; and

wherein the liquid fuel cut-off is a solenoid connected to open and close a fuel path to the pull-start engine in response to reception of electrical power from the switch.

7. (Original) The dual fuel engine of claim 5, wherein the liquid fuel cut-off is a solenoid valve powered by the electrical power generator.

Champion - EX2082, Page 467 of 575
Harbor Freight Tools USA Inc. et al v. Champion Power Equip., Inc.
IPR2025-01121

8. (Original) The dual fuel engine of claim 7, wherein the switch selectively powers the solenoid valve by controlling electrical connection between the solenoid valve and the electrical power generator.

9. (Original) The dual fuel engine of claim 7, wherein the solenoid valve is normally open to provide liquid fuel to the engine when the solenoid valve is unpowered.

10. (Original) The dual fuel engine of claim 9, wherein a pull-starter drives the electrical power generator to power and close the solenoid valve while starting the engine on gaseous fuel.

11. (Original) The dual fuel engine of claim 7, wherein the electrical power generator comprises a magneto or an alternator coupled to a voltage regulator to provide a regulated voltage to the solenoid valve.

12. (Original) The dual fuel engine of claim 1, wherein the liquid fuel cut-off is manually actuated to interrupt liquid fuel.

13. (Original) The dual fuel engine of claim 1, wherein the liquid fuel cut-off actuates to interrupt liquid fuel free from linear motion.

14. (Original) The dual fuel engine of claim 1, wherein the liquid fuel cut-off comprises:

a rotating shaft extending through an aperture in the carburetor;

a fuel seal around the shaft to seal the aperture; and

a blocking member coupled to the shaft in the carburetor that rotates between a blocking and a non-blocking position to selectively block a liquid fuel path to the engine.

15. (Original) The dual fuel engine of claim 14 further comprising:

a lever coupled to the shaft outside the carburetor;

a spring coupled to the lever to hold the blocking member in either the blocking or non-blocking position; and

a cable coupled to the lever to pull against the spring and rotate the blocking member to the other of the blocking or non-blocking positions.

Champion - EX2082, Page 468 of 575
Harbor Freight Tools USA Inc. et al v. Champion Power Equip., Inc.
IPR2025-01121

16. (Original) The dual fuel engine of claim 1, wherein the liquid fuel cut-off is magnetically actuated to selectively interrupt liquid fuel.

17. (Original) The dual fuel engine of claim 1 further comprising:

a spring pushing the liquid fuel cut-off to interrupt liquid fuel; and

an actuating magnet coupled to the carburetor to selectively pull the liquid fuel cut-off against the spring away from a position interrupting liquid fuel.

18. (Original) The dual fuel engine of claim 17 further comprising a housing at least partially enclosing the liquid fuel cutoff, the housing including:

a first section enclosing a plunger of the liquid fuel cut-off to the carburetor and holding the spring against the plunger; and

a second section coupled to the first section and enclosing the actuating magnet.

19. (Withdrawn) A batteryless dual fuel generator comprising:

a housing containing a pull start engine coupled to drive an alternator, the engine operable on a gaseous fuel and a liquid fuel;

a carburetor attached to an intake of the engine comprising:

a throat to mix fuel with air,

a float bowl,

a fuel passage to provide liquid fuel from the float bowl to the throat; and

a fuel shutoff attached to the carburetor to close the fuel passage upon selection of engine operation to gaseous fuel.

20. (Withdrawn) The batteryless dual fuel generator of claim 19, wherein the fuel shutoff actuates to close the fuel passage free from linear motion.

21. (Withdrawn) The batteryless dual fuel generator of claim 19, wherein the fuel shutoff comprises:

a rotating shaft extending through an opening in the carburetor; and

a valve member coupled to the shaft in the carburetor that rotates to control fuel flow into the fuel passage.

Champion - EX2082, Page 469 of 575
Harbor Freight Tools USA Inc. et al v. Champion Power Equip., Inc.
IPR2025-01121

22. (Withdrawn) The batteryless dual fuel generator of claim 21, wherein the valve member is positioned in the float bowl and the shaft extends substantially horizontal through the opening.

23. (Withdrawn) The batteryless dual fuel generator of claim 21, wherein the valve member has a flow passage that aligns with the fuel passage to control fuel flow into the fuel passage.

24. (Withdrawn) The batteryless dual fuel generator of claim 21 further comprising:

a compression spring on the shaft in the carburetor pushing the valve member to close the fuel passage; and

a plug in the opening surrounding the shaft to hold the compression spring against the valve member.

25. (Withdrawn) The batteryless dual fuel generator of claim 24 further comprising:

a lever coupled to the shaft outside the carburetor; and

a cable coupled to the lever to actuate the valve member to open and close the fuel passage.

26. (Withdrawn) The batteryless dual fuel generator of claim 24 further comprising one or more fuel seals within the plug to seal around the shaft.

27. (Withdrawn) The batteryless dual fuel generator of claim 19, wherein the fuel shutoff is magnetically actuated to selectively close the fuel passage, controlled by a manually actuated magnet coupled to the carburetor.

28. (Withdrawn) The batteryless dual fuel generator of claim 19 further comprising:

a spring pushing the fuel shutoff to close the fuel passage; and

an actuating magnet coupled to the carburetor to selectively pull the fuel shutoff against the spring to open the fuel passage.

29. (Withdrawn) The batteryless dual fuel generator of claim 28 further comprising a housing at least partially enclosing the fuel shutoff, the housing including:

Champion - EX2082, Page 470 of 575
Harbor Freight Tools USA Inc. et al v. Champion Power Equip., Inc.
IPR2025-01121

a first section enclosing a plunger of the fuel shutoff to the carburetor and holding the spring against the plunger; and

a second section coupled to the first section and enclosing the actuating magnet.

30. (Withdrawn) The batteryless dual fuel generator of claim 19, wherein the fuel shutoff is a carburetor cutoff solenoid; and

wherein the generator further comprises:

a charge winding to generate electrical power to operate the carburetor cutoff solenoid, and

a switch to selectively power the carburetor cutoff solenoid by controlling electrical connection between the carburetor cutoff solenoid and the charge winding.

31. (Withdrawn) The batteryless dual fuel generator of claim 30, wherein the carburetor cutoff solenoid is normally open to provide liquid fuel to the engine when the carburetor cutoff solenoid is unpowered.

32. (Withdrawn) The batteryless dual fuel generator of claim 31, wherein a pull-starter drives the engine operating the charge winding to power and close the carburetor cutoff solenoid while starting the engine on gaseous fuel.

33. (Withdrawn) The batteryless dual fuel generator of claim 30, wherein the switch is an electro-mechanical switch connected to the charge winding and connecting at least one fuel source to the carburetor to selectively control fuel flow from the at least one fuel source to the carburetor.

34. (Withdrawn) The batteryless dual fuel generator of claim 30, wherein the charge winding is coupled to a voltage regulator to provide a regulated voltage to the carburetor cutoff solenoid.

35. (Withdrawn) A carburetor having a fuel shutoff comprising:

a carburetor comprising:

a float bowl,

a throat,

a fuel passage to provide fuel from the float bowl to the throat; and

a fuel shutoff coupled to the carburetor having a first end in the carburetor that actuates to close the fuel passage and a second end external to the carburetor to actuate the first end; and

wherein the fuel shutoff actuates free from linear motion.

36. (Withdrawn) The carburetor having a fuel shutoff of claim 35, wherein the fuel shutoff is a manually actuated fuel shutoff.

37. (Withdrawn) The carburetor having a fuel shutoff of claim 35, wherein the fuel shutoff comprises a shaft extending into the carburetor through an aperture in the float bowl and coupled to a valve tip in the float bowl that rotates to open and close the fuel passage.

38. (Withdrawn) The carburetor having a fuel shutoff of claim 37, wherein the valve tip rotates parallel to an inlet of the fuel passage between a first position permitting fuel flow into the inlet and a second position blocking fuel flow into the inlet.

39. (Withdrawn) The carburetor having a fuel shutoff of claim 37, wherein the fuel passage has an inlet with a substantially flat perimeter edge and the valve tip maintains planar contact with the perimeter edge while rotating to open and close the fuel passage.

40. (Withdrawn) The carburetor having a fuel shutoff of claim 39, wherein the shaft is substantially horizontal and the inlet of the fuel passage faces substantially horizontal.

41. (Withdrawn) The carburetor having a fuel shutoff of claim 39 further comprising:

a plug in the aperture around the shaft; and

a compression spring around the shaft in the float bowl pushing against the plug to hold the valve tip against the perimeter edge of the inlet.

42. (Withdrawn) The carburetor having a fuel shutoff of claim 41 further comprising a first fuel seal between the shaft and plug, the first fuel seal comprising a primary o-ring in an o-ring groove in the shaft.

Champion - EX2082, Page 472 of 575
Harbor Freight Tools USA Inc. et al v. Champion Power Equip., Inc.
IPR2025-01121

43. (Withdrawn) The carburetor having a fuel shutoff of claim 42 further comprising:

a second fuel seal between the shaft and plug, the second fuel seal comprising a secondary o-ring in a counterbore in the plug; and

a support member mounted over the counterbore around the shaft to hold the secondary o-ring in the counterbore.

44. (Withdrawn) The carburetor having a fuel shutoff of claim 37 further comprising:

a lever coupled to the shaft outside of the carburetor;

a spring coupled to the lever to hold the fuel shutoff opening the fuel passage; and

a cable coupled to the lever to move the lever against the spring and rotate the fuel shutoff to close the fuel passage.

45. (Withdrawn) The carburetor having a fuel shutoff of claim 37, wherein the valve tip comprises thermoplastic.

46. (Withdrawn) The carburetor having a fuel shutoff of claim 37, wherein the valve tip comprises one of an oval and stadium shape.

47. (Withdrawn) The carburetor having a fuel shutoff of claim 37, wherein the valve tip has a cutout that aligns with the fuel passage to open the fuel passage.

48. (Withdrawn) A method of assembling a dual fuel engine comprising:

providing an engine operable on a gaseous fuel and a liquid fuel;

attaching a carburetor to an intake of the engine, the carburetor comprising:

a throat to mix gaseous fuel with air and liquid fuel with air,

a float bowl,

a fuel passage to provide liquid fuel from the float bowl to the throat;

coupling a switch to the engine to change operation of the engine between gaseous fuel and liquid fuel; and

attaching a liquid fuel cut-off to the carburetor to close the fuel passage upon actuation of the switch from liquid fuel to gaseous fuel.

Champion - EX2082, Page 473 of 575
Harbor Freight Tools USA Inc. et al v. Champion Power Equip., Inc.
IPR2025-01121

49. (Withdrawn) The method of claim 48 further comprising coupling a manually operated control operatively to the liquid fuel cut-off.

50. (Withdrawn) The method of claim 48, wherein attaching the liquid fuel cut-off to the carburetor comprises:

providing a shaft having a valve tip located at an end of the shaft;

installing a compression spring on the shaft;

installing a plug on the shaft so that the compression spring is positioned between the plug and the valve tip; and

anchoring the plug in an aperture in the carburetor so that the compression spring holds the valve tip to an inlet of the fuel passage.

51. (Withdrawn) The method of claim 50, wherein providing the shaft having a valve tip located at an end of the shaft comprises pressing the valve tip onto the shaft.

52. (Withdrawn) The method of claim 50 further comprising positioning at least one fuel seal on the shaft to seal between the shaft and plug.

53. (Withdrawn) The method of claim 50, wherein the shaft rotates the valve tip between a first position allowing fuel flow into the fuel passage and a second position blocking fuel flow into the fuel passage.

54. (Withdrawn) The method of claim 53, wherein the valve tip comprises an oval or stadium shape with a cutout in the oval or stadium shape that aligns with the fuel passage when the valve tip is rotated to the first position such that fuel can pass through the cutout into the fuel passage.

55. (Withdrawn) The method of claim 53 further comprising:

coupling a lever to the shaft;

attaching a control spring to the lever to actuate the shaft to one of the first position and second position; and

attaching a cable to the lever to actuate the shaft to the other of the first position and second position.

Champion - EX2082, Page 474 of 575
Harbor Freight Tools USA Inc. et al v. Champion Power Equip., Inc.
IPR2025-01121

56. (Original) The dual fuel engine of claim 7, wherein the solenoid valve is open to provide liquid fuel to the engine when the solenoid valve is powered.

57. (Original) The dual fuel engine of claim 56, wherein a pull-starter drives the electrical power generator to power and open the solenoid valve while starting the engine on liquid fuel.

58. (Withdrawn) The batteryless dual fuel generator of claim 30, wherein the carburetor cutoff solenoid is open to provide liquid fuel to the engine when the carburetor cutoff solenoid is powered.

59. (Withdrawn) The batteryless dual fuel generator of claim 58, wherein a pull-starter drives the engine operating the charge winding to power and open the carburetor cutoff solenoid while starting the engine on liquid fuel.

60. (Original) The dual fuel engine of claim 7 further comprising a microcontroller to close the solenoid valve when the engine operates on gaseous fuel and open the solenoid valve to operate the engine on liquid fuel.

61. (Original) The dual fuel engine of claim 60, wherein the microcontroller closes the solenoid valve during engine shutdown from operation on liquid fuel.

62. (Withdrawn) The batteryless dual fuel generator of claim 30, wherein the switch is a microcontroller configured to close the carburetor cutoff solenoid when the engine operates on gaseous fuel and to open the carburetor cutoff solenoid to operate the engine on liquid fuel.

63. (Withdrawn) The batteryless dual fuel generator of claim 62, wherein the microcontroller closes the carburetor cutoff solenoid during engine shutdown from operation on liquid fuel.

Champion - EX2082, Page 475 of 575
Harbor Freight Tools USA Inc. et al v. Champion Power Equip., Inc.
IPR2025-01121

PTO/SB/06 (09-11)
Approved for use through 1/31/2014. OMB 0651-0032
U.S. Patent and Trademark Office; U.S. DEPARTMENT OF COMMERCE
Under the Paperwork Reduction Act of 1995, no persons are required to respond to a collection of information unless it displays a valid OMB control number.

PATENT APPLICATION FEE DETERMINATION RECORD

Substitute for Form PTO-875

Application or Docket Number	Filing Date	
14/925,441	10/28/2015	☐ To be Mailed

ENTITY: ☐ LARGE ☒ SMALL ☐ MICRO

APPLICATION AS FILED – PART I

FOR	(Column 1) NUMBER FILED	(Column 2) NUMBER EXTRA	RATE ($)	FEE ($)
☐ BASIC FEE (37 CFR 1.16(a), (b), or (c))	N/A	N/A	N/A	
☐ SEARCH FEE (37 CFR 1.16(k), (i), or (m))	N/A	N/A	N/A	
☐ EXAMINATION FEE (37 CFR 1.16(o), (p), or (q))	N/A	N/A	N/A	
TOTAL CLAIMS (37 CFR 1.16(i))	minus 20 =	*	x $ =	
INDEPENDENT CLAIMS (37 CFR 1.16(h))	minus 3 =	*	x $ =	
☐ APPLICATION SIZE FEE (37 CFR 1.16(s))	If the specification and drawings exceed 100 sheets of paper, the application size fee due is $310 ($155 for small entity) for each additional 50 sheets or fraction thereof. See 35 U.S.C. 41(a)(1)(G) and 37 CFR 1.16(s).			
☐ MULTIPLE DEPENDENT CLAIM PRESENT (37 CFR 1.16(j))				
* If the difference in column 1 is less than zero, enter "0" in column 2.			TOTAL	

APPLICATION AS AMENDED – PART II

AMENDMENT

06/21/2017	(Column 1) CLAIMS REMAINING AFTER AMENDMENT		(Column 2) HIGHEST NUMBER PREVIOUSLY PAID FOR	(Column 3) PRESENT EXTRA	RATE ($)	ADDITIONAL FEE ($)
Total (37 CFR 1.16(i))	- 63	Minus	** 63	= 0	x $40 =	0
Independent (37 CFR 1.16(h))	- 4	Minus	***4	= 0	x $210 =	0
☐ Application Size Fee (37 CFR 1.16(s))						
☐ FIRST PRESENTATION OF MULTIPLE DEPENDENT CLAIM (37 CFR 1.16(j))						
					TOTAL ADD'L FEE	0

AMENDMENT

	(Column 1) CLAIMS REMAINING AFTER AMENDMENT		(Column 2) HIGHEST NUMBER PREVIOUSLY PAID FOR	(Column 3) PRESENT EXTRA	RATE ($)	ADDITIONAL FEE ($)
Total (37 CFR 1.16(i))	-	Minus	**	=	x $ =	
Independent (37 CFR 1.16(h))	-	Minus	***	=	x $ =	
☐ Application Size Fee (37 CFR 1.16(s))						
☐ FIRST PRESENTATION OF MULTIPLE DEPENDENT CLAIM (37 CFR 1.16(j))						
					TOTAL ADD'L FEE	

* If the entry in column 1 is less than the entry in column 2, write "0" in column 3.
** If the "Highest Number Previously Paid For" IN THIS SPACE is less than 20, enter "20".
*** If the "Highest Number Previously Paid For" IN THIS SPACE is less than 3, enter "3".
The "Highest Number Previously Paid For" (Total or Independent) is the highest number found in the appropriate box in column 1.

LIE
CURTIS NELLOMS JR

This collection of information is required by 37 CFR 1.16. The information is required to obtain or retain a benefit by the public which is to file (and by the USPTO to process) an application. Confidentiality is governed by 35 U.S.C. 122 and 37 CFR 1.14. This collection is estimated to take 12 minutes to complete, including gathering, preparing, and submitting the completed application form to the USPTO. Time will vary depending upon the individual case. Any comments on the amount of time you require to complete this form and/or suggestions for reducing this burden, should be sent to the Chief Information Officer, U.S. Patent and Trademark Office, U.S. Department of Commerce, P.O. Box 1450, Alexandria, VA 22313-1450. DO NOT SEND FEES OR COMPLETED FORMS TO THIS ADDRESS. **SEND TO: Commissioner for Patents, P.O. Box 1450, Alexandria, VA 22313-1450.**
If you need assistance in completing the form, call 1-800-PTO-9199 and select option 2.

UNITED STATES PATENT AND TRADEMARK OFFICE

UNITED STATES DEPARTMENT OF COMMERCE
United States Patent and Trademark Office
Address: COMMISSIONER FOR PATENTS
P.O. Box 1450
Alexandria, Virginia 22313-1450
www.uspto.gov

APPLICATION NO.	FILING DATE	FIRST NAMED INVENTOR	ATTORNEY DOCKET NO.	CONFIRMATION NO.
14/925,441	10/28/2015	Kendall J. Collie	CET1090.042	1059

26629 7590 04/21/2017
ZIOLKOWSKI PATENT SOLUTIONS GROUP, SC (ZPS)
136 S WISCONSIN ST
PORT WASHINGTON, WI 53074

EXAMINER
TRAN, LONG T

ART UNIT	PAPER NUMBER
3747	

NOTIFICATION DATE	DELIVERY MODE
04/21/2017	ELECTRONIC

Please find below and/or attached an Office communication concerning this application or proceeding.

The time period for reply, if any, is set in the attached communication.

Notice of the Office communication was sent electronically on above-indicated "Notification Date" to the following e-mail address(es):

info@zpspatents.com
sml@zpspatents.com

Office Action Summary	Application No. 14/925,441	Applicant(s) COLLIE ET AL.	
	Examiner LONG T. TRAN	Art Unit 3747	AIA (First Inventor to File) Status Yes

– The MAILING DATE of this communication appears on the cover sheet with the correspondence address –

Period for Reply

A SHORTENED STATUTORY PERIOD FOR REPLY IS SET TO EXPIRE 2 MONTHS FROM THE MAILING DATE OF THIS COMMUNICATION.

- Extensions of time may be available under the provisions of 37 CFR 1.136(a). In no event, however, may a reply be timely filed after SIX (6) MONTHS from the mailing date of this communication.
- If NO period for reply is specified above, the maximum statutory period will apply and will expire SIX (6) MONTHS from the mailing date of this communication.
- Failure to reply within the set or extended period for reply will, by statute, cause the application to become ABANDONED (35 U.S.C. § 133). Any reply received by the Office later than three months after the mailing date of this communication, even if timely filed, may reduce any earned patent term adjustment. See 37 CFR 1.704(b).

Status

1)☒ Responsive to communication(s) filed on 28 October 2015.

☐ A declaration(s)/affidavit(s) under **37 CFR 1.130(b)** was/were filed on _____.

2a)☐ This action is **FINAL**. 2b)☐ This action is non-final.

3)☐ An election was made by the applicant in response to a restriction requirement set forth during the interview on _____; the restriction requirement and election have been incorporated into this action.

4)☐ Since this application is in condition for allowance except for formal matters, prosecution as to the merits is closed in accordance with the practice under *Ex parte Quayle*, 1935 C.D. 11, 453 O.G. 213.

Disposition of Claims*

5)☒ Claim(s) 1-63 is/are pending in the application.

5a) Of the above claim(s) _____ is/are withdrawn from consideration.

6)☐ Claim(s) _____ is/are allowed.

7)☐ Claim(s) _____ is/are rejected.

8)☐ Claim(s) _____ is/are objected to.

9)☐ Claim(s) 1-63 are subject to restriction and/or election requirement.

* If any claims have been determined allowable, you may be eligible to benefit from the **Patent Prosecution Highway** program at a participating intellectual property office for the corresponding application. For more information, please see http://www.uspto.gov/patents/init_events/pph/index.jsp or send an inquiry to PPHfeedback@uspto.gov.

Application Papers

10)☐ The specification is objected to by the Examiner.

11)☐ The drawing(s) filed on _____ is/are: a)☐ accepted or b)☐ objected to by the Examiner.

Applicant may not request that any objection to the drawing(s) be held in abeyance. See 37 CFR 1.85(a).

Replacement drawing sheet(s) including the correction is required if the drawing(s) is objected to. See 37 CFR 1.121(d).

Priority under 35 U.S.C. § 119

12)☐ Acknowledgment is made of a claim for foreign priority under 35 U.S.C. § 119(a)-(d) or (f).

Certified copies:

a)☐ All b)☐ Some** c)☐ None of the:

1.☐ Certified copies of the priority documents have been received.

2.☐ Certified copies of the priority documents have been received in Application No. _____.

3.☐ Copies of the certified copies of the priority documents have been received in this National Stage application from the International Bureau (PCT Rule 17.2(a)).

** See the attached detailed Office action for a list of the certified copies not received.

Attachment(s)

1) ☐ Notice of References Cited (PTO-892)

2) ☐ Information Disclosure Statement(s) (PTO/SB/08a and/or PTO/SB/08b) Paper No(s)/Mail Date _____

3) ☐ Interview Summary (PTO-413) Paper No(s)/Mail Date. _____.

4) ☐ Other: _____.

Champion - EX2082, Page 478 of 575
Harbor Freight Tools USA Inc. et al v. Champion Power Equip., Inc.
IPR2025-01121

DETAILED ACTION

1. The present application, filed on or after March 16, 2013, is being examined under the first inventor to file provisions of the AIA.

Election/Restrictions

2. Restriction to one of the following inventions is required under 35 U.S.C. 121:

I. Claims 1 – 18, 56 – 57, 60 - 61, drawn to a Dual Fuel engine, classified in F02D 19/06.

II. Claims 19 – 34, 58 – 59, 62 - 63, drawn to a Generator, classified in F02B 63/04.

III. Claims 35 – 47, drawn to a Carburetor, classified in F02M 17/20.

IV. Claims 48 – 55, drawn to a process of making an engine, classified in B23P 19/042.

3. The inventions are distinct, each from the other because of the following reasons:

Inventions I, II, III and IV are directed to related internal combustion engines. The related inventions are distinct if: (1) the inventions as claimed are either not capable of use together or can have a materially different design, mode of operation, function, or effect; (2) the inventions do not overlap in scope, i.e., are mutually exclusive; and (3) the inventions as claimed are not obvious variants. See MPEP § 806.05(j). In the instant case, the inventions as claimed have a materially different design, mode of operation, function, or effect. Furthermore, the inventions as claimed do not encompass

overlapping subject matter and there is nothing of record to show them to be obvious variants.

4. Restriction for examination purposes as indicated is proper because all the inventions listed in this action are independent or distinct for the reasons given above and there would be a serious search and/or examination burden if restriction were not required because one or more of the following reasons apply:

Each of the inventions as listed are patentable distinct in scope and would require a serious burden of search on the Examiner since each related search field comprise of vastly different engine designs that do not overlap in the invention's scope. In addition, the distinct inventions that are different in scope present embodiments that do not overlap in scope that would allow for a reasonable search.

5. **Applicant is advised that the reply to this requirement to be complete must include (i) an election of a invention to be examined** even though the requirement may be traversed (37 CFR 1.143) **and (ii) identification of the claims encompassing the elected invention**.

The election of an invention may be made with or without traverse. To reserve a right to petition, the election must be made with traverse. If the reply does not distinctly and specifically point out supposed errors in the restriction requirement, the election shall be treated as an election without traverse. Traversal must be presented at the time of election in order to be considered timely. Failure to timely traverse the requirement will result in the loss of right to petition under 37 CFR 1.144. If claims are added after

the election, applicant must indicate which of these claims are readable upon the elected invention.

Should applicant traverse on the ground that the inventions are not patentably distinct, applicant should submit evidence or identify such evidence now of record showing the inventions to be obvious variants or clearly admit on the record that this is the case. In either instance, if the examiner finds one of the inventions unpatentable over the prior art, the evidence or admission may be used in a rejection under 35 U.S.C. 103 or pre-AIA 35 U.S.C. 103(a) of the other invention.

Applicant is reminded that upon the cancellation of claims to a non-elected invention, the inventorship must be corrected in compliance with 37 CFR 1.48(a) if one or more of the currently named inventors is no longer an inventor of at least one claim remaining in the application. A request to correct inventorship under 37 CFR 1.48(a) must be accompanied by an application data sheet in accordance with 37 CFR 1.76 that identifies each inventor by his or her legal name and by the processing fee required under 37 CFR 1.17(i).

6. Any inquiry concerning this communication or earlier communications from the examiner should be directed to LONG T. TRAN whose telephone number is (571)270-1899. The examiner can normally be reached on M-F, 7:30am - 5:00pm.

Examiner interviews are available via telephone, in-person, and video conferencing using a USPTO supplied web-based collaboration tool. To schedule an

interview, applicant is encouraged to use the USPTO Automated Interview Request (AIR) at http://www.uspto.gov/interviewpractice.

If attempts to reach the examiner by telephone are unsuccessful, the examiner's supervisor, Lindsay Low can be reached on 571-272-1196. The fax phone number for the organization where this application or proceeding is assigned is 571-273-8300.

Information regarding the status of an application may be obtained from the Patent Application Information Retrieval (PAIR) system. Status information for published applications may be obtained from either Private PAIR or Public PAIR. Status information for unpublished applications is available through Private PAIR only. For more information about the PAIR system, see http://pair-direct.uspto.gov. Should you have questions on access to the Private PAIR system, contact the Electronic Business Center (EBC) at 866-217-9197 (toll-free). If you would like assistance from a USPTO Customer Service Representative or access to the automated information system, call 800-786-9199 (IN USA OR CANADA) or 571-272-1000.

/LONG T TRAN/
Examiner, Art Unit 3747

Index of Claims	Application/Control No.	Applicant(s)/Patent Under Reexamination
	14925441	COLLIE ET AL.
	Examiner	**Art Unit**
	LONG T TRAN	3747

✓	Rejected	-	Cancelled	N	Non-Elected	A	Appeal
=	Allowed	÷	Restricted	I	Interference	O	Objected

☐ Claims renumbered in the same order as presented by applicant ☐ CPA ☐ T.D. ☐ R.1.47

CLAIM		DATE								
Final	Original	04/18/2017								
	1	÷								
	2	÷								
	3	÷								
	4	÷								
	5	÷								
	6	÷								
	7	÷								
	8	÷								
	9	÷								
	10	÷								
	11	÷								
	12	÷								
	13	÷								
	14	÷								
	15	÷								
	16	÷								
	17	÷								
	18	÷								
	19	÷								
	20	÷								
	21	÷								
	22	÷								
	23	÷								
	24	÷								
	25	÷								
	26	÷								
	27	÷								
	28	÷								
	29	÷								
	30	÷								
	31	÷								
	32	÷								
	33	÷								
	34	÷								
	35	÷								
	36	÷								

Champion - EX2082, Page 483 of 575
Harbor Freight Tools USA Inc. et al v. Champion Power Equip., Inc.
IPR2025-01121

Index of Claims	Application/Control No.	Applicant(s)/Patent Under Reexamination
	14925441	COLLIE ET AL.
	Examiner	**Art Unit**
	LONG T TRAN	3747

✓	Rejected	-	Cancelled	N	Non-Elected	A	Appeal
=	Allowed	÷	Restricted	I	Interference	O	Objected

☐ Claims renumbered in the same order as presented by applicant ☐ CPA ☐ T.D. ☐ R.1.47

CLAIM		DATE								
Final	Original	04/18/2017								
	37	÷								
	38	÷								
	39	÷								
	40	÷								
	41	÷								
	42	÷								
	43	÷								
	44	÷								
	45	÷								
	46	÷								
	47	÷								
	48	÷								
	49	÷								
	50	÷								
	51	÷								
	52	÷								
	53	÷								
	54	÷								
	55	÷								
	56	÷								
	57	÷								
	58	÷								
	59	÷								
	60	÷								
	61	÷								
	62	÷								
	63	÷								

Champion - EX2082, Page 484 of 575
Harbor Freight Tools USA Inc. et al v. Champion Power Equip., Inc.
IPR2025-01121

UNITED STATES PATENT AND TRADEMARK OFFICE

UNITED STATES DEPARTMENT OF COMMERCE
United States Patent and Trademark Office
Address: COMMISSIONER FOR PATENTS
PO Box 1450
Alexandria, Virginia 22313-1450
www.uspto.gov

APPLICATION NUMBER	FILING OR 371(C) DATE	FIRST NAMED APPLICANT	ATTY. DOCKET NO./TITLE
14/925,441	10/28/2015	Kendall J. Collie	CET1090.042

CONFIRMATION NO. 1059

PUBLICATION NOTICE

26629
ZIOLKOWSKI PATENT SOLUTIONS GROUP, SC (ZPS)
136 S WISCONSIN ST
PORT WASHINGTON, WI 53074

OC000000087914290

Title:BATTERYLESS DUAL FUEL ENGINE WITH LIQUID FUEL CUT-OFF

Publication No.US-2016-0363099-A1
Publication Date:12/15/2016

NOTICE OF PUBLICATION OF APPLICATION

The above-identified application will be electronically published as a patent application publication pursuant to 37 CFR 1.211, et seq. The patent application publication number and publication date are set forth above.

The publication may be accessed through the USPTO's publically available Searchable Databases via the Internet at www.uspto.gov. The direct link to access the publication is currently http://www.uspto.gov/patft/.

The publication process established by the Office does not provide for mailing a copy of the publication to applicant. A copy of the publication may be obtained from the Office upon payment of the appropriate fee set forth in 37 CFR 1.19(a)(1). Orders for copies of patent application publications are handled by the USPTO's Office of Public Records. The Office of Public Records can be reached by telephone at (571) 272-3150 or (800) 972-6382, by facsimile at (571) 273-3250, by mail addressed to the United States Patent and Trademark Office, Office of Public Records, Alexandria, VA 22313-1450 or via the Internet.

In addition, information on the status of the application, including the mailing date of Office actions and the dates of receipt of correspondence filed in the Office, may also be accessed via the Internet through the Patent Electronic Business Center at www.uspto.gov using the public side of the Patent Application Information and Retrieval (PAIR) system. The direct link to access this status information is currently http://pair.uspto.gov/. Prior to publication, such status information is confidential and may only be obtained by applicant using the private side of PAIR.

Further assistance in electronically accessing the publication, or about PAIR, is available by calling the Patent Electronic Business Center at 1-866-217-9197.

Office of Data Managment, Application Assistance Unit (571) 272-4000, or (571) 272-4200, or 1-888-786-0101

UNITED STATES PATENT AND TRADEMARK OFFICE

UNITED STATES DEPARTMENT OF COMMERCE
United States Patent and Trademark Office
Address: COMMISSIONER FOR PATENTS
PO Box 1450
Alexandria, Virginia 22313-1450
www.uspto.gov

APPLICATION NUMBER	FILING or 371(c) DATE	GRP ART UNIT	FIL FEE REC'D	ATTY.DOCKET.NO	TOT CLAIMS	IND CLAIMS
14/925,441	10/28/2015	3747	2660	CET1090.042	63	4

CONFIRMATION NO. 1059

FILING RECEIPT

26629
ZIOLKOWSKI PATENT SOLUTIONS GROUP, SC (ZPS)
136 S WISCONSIN ST
PORT WASHINGTON, WI 53074

OC000000078549464

Date Mailed: 11/10/2015

Receipt is acknowledged of this non-provisional patent application. The application will be taken up for examination in due course. Applicant will be notified as to the results of the examination. Any correspondence concerning the application must include the following identification information: the U.S. APPLICATION NUMBER, FILING DATE, NAME OF APPLICANT, and TITLE OF INVENTION. Fees transmitted by check or draft are subject to collection. Please verify the accuracy of the data presented on this receipt. **If an error is noted on this Filing Receipt, please submit a written request for a Filing Receipt Correction. Please provide a copy of this Filing Receipt with the changes noted thereon. If you received a "Notice to File Missing Parts" for this application, please submit any corrections to this Filing Receipt with your reply to the Notice. When the USPTO processes the reply to the Notice, the USPTO will generate another Filing Receipt incorporating the requested corrections**

Inventor(s)

Kendall J. Collie, Anaheim Hills, CA;
Mark J. Sarder, Waukesha, WI;
Aleko D. Sotiriades, Cedarburg, WI;
James J. Dehn, Brookfield, WI;
Leigh Jenison, Hartland, WI;
Hiroaki Sato, Brookfield, WI;

Applicant(s)

Champion Engine Technology, LLC, Sussex, WI;

Power of Attorney: The patent practitioners associated with Customer Number 26629

Domestic Priority data as claimed by applicant

This application is a CIP of 14/738,060 06/12/2015

Foreign Applications for which priority is claimed (You may be eligible to benefit from the **Patent Prosecution Highway** program at the USPTO. Please see http://www.uspto.gov for more information.) - None.
Foreign application information must be provided in an Application Data Sheet in order to constitute a claim to foreign priority. See 37 CFR 1.55 and 1.76.

Permission to Access - A proper **Authorization to Permit Access to Application by Participating Offices** (PTO/SB/39 or its equivalent) has been received by the USPTO.

If Required, Foreign Filing License Granted: 11/06/2015
The country code and number of your priority application, to be used for filing abroad under the Paris Convention, is **US 14/925,441**

Projected Publication Date: 12/15/2016

Non-Publication Request: No

Early Publication Request: No
** **SMALL ENTITY** **
Title

BATTERYLESS DUAL FUEL ENGINE WITH LIQUID FUEL CUT-OFF

Preliminary Class

123

Statement under 37 CFR 1.55 or 1.78 for AIA (First Inventor to File) Transition Applications: No

PROTECTING YOUR INVENTION OUTSIDE THE UNITED STATES

Since the rights granted by a U.S. patent extend only throughout the territory of the United States and have no effect in a foreign country, an inventor who wishes patent protection in another country must apply for a patent in a specific country or in regional patent offices. Applicants may wish to consider the filing of an international application under the Patent Cooperation Treaty (PCT). An international (PCT) application generally has the same effect as a regular national patent application in each PCT-member country. The PCT process **simplifies** the filing of patent applications on the same invention in member countries, but **does not result** in a grant of "an international patent" and does not eliminate the need of applicants to file additional documents and fees in countries where patent protection is desired.

Almost every country has its own patent law, and a person desiring a patent in a particular country must make an application for patent in that country in accordance with its particular laws. Since the laws of many countries differ in various respects from the patent law of the United States, applicants are advised to seek guidance from specific foreign countries to ensure that patent rights are not lost prematurely.

Applicants also are advised that in the case of inventions made in the United States, the Director of the USPTO must issue a license before applicants can apply for a patent in a foreign country. The filing of a U.S. patent application serves as a request for a foreign filing license. The application's filing receipt contains further information and guidance as to the status of applicant's license for foreign filing.

Applicants may wish to consult the USPTO booklet, "General Information Concerning Patents" (specifically, the section entitled "Treaties and Foreign Patents") for more information on timeframes and deadlines for filing foreign patent applications. The guide is available either by contacting the USPTO Contact Center at 800-786-9199, or it can be viewed on the USPTO website at http://www.uspto.gov/web/offices/pac/doc/general/index.html.

For information on preventing theft of your intellectual property (patents, trademarks and copyrights), you may wish to consult the U.S. Government website, http://www.stopfakes.gov. Part of a Department of Commerce initiative, this website includes self-help "toolkits" giving innovators guidance on how to protect intellectual property in specific countries such as China, Korea and Mexico. For questions regarding patent enforcement issues, applicants may call the U.S. Government hotline at 1-866-999-HALT (1-866-999-4258).

LICENSE FOR FOREIGN FILING UNDER

Title 35, United States Code, Section 184

Title 37, Code of Federal Regulations, 5.11 & 5.15

GRANTED

The applicant has been granted a license under 35 U.S.C. 184, if the phrase "IF REQUIRED, FOREIGN FILING LICENSE GRANTED" followed by a date appears on this form. Such licenses are issued in all applications where the conditions for issuance of a license have been met, regardless of whether or not a license may be required as set forth in 37 CFR 5.15. The scope and limitations of this license are set forth in 37 CFR 5.15(a) unless an earlier license has been issued under 37 CFR 5.15(b). The license is subject to revocation upon written notification. The date indicated is the effective date of the license, unless an earlier license of similar scope has been granted under 37 CFR 5.13 or 5.14.

This license is to be retained by the licensee and may be used at any time on or after the effective date thereof unless it is revoked. This license is automatically transferred to any related applications(s) filed under 37 CFR 1.53(d). This license is not retroactive.

The grant of a license does not in any way lessen the responsibility of a licensee for the security of the subject matter as imposed by any Government contract or the provisions of existing laws relating to espionage and the national security or the export of technical data. Licensees should apprise themselves of current regulations especially with respect to certain countries, of other agencies, particularly the Office of Defense Trade Controls, Department of State (with respect to Arms, Munitions and Implements of War (22 CFR 121-128)); the Bureau of Industry and Security, Department of Commerce (15 CFR parts 730-774); the Office of Foreign AssetsControl, Department of Treasury (31 CFR Parts 500+) and the Department of Energy.

NOT GRANTED

No license under 35 U.S.C. 184 has been granted at this time, if the phrase "IF REQUIRED, FOREIGN FILING LICENSE GRANTED" DOES NOT appear on this form. Applicant may still petition for a license under 37 CFR 5.12, if a license is desired before the expiration of 6 months from the filing date of the application. If 6 months has lapsed from the filing date of this application and the licensee has not received any indication of a secrecy order under 35 U.S.C. 181, the licensee may foreign file the application pursuant to 37 CFR 5.15(b).

SelectUSA

The United States represents the largest, most dynamic marketplace in the world and is an unparalleled location for business investment, innovation, and commercialization of new technologies. The U.S. offers tremendous resources and advantages for those who invest and manufacture goods here. Through SelectUSA, our nation works to promote and facilitate business investment. SelectUSA provides information assistance to the international investor community; serves as an ombudsman for existing and potential investors; advocates on behalf of U.S. cities, states, and regions competing for global investment; and counsels U.S. economic development organizations on investment attraction best practices. To learn more about why the United States is the best country in the world to develop technology, manufacture products, deliver services, and grow your business, visit http://www.SelectUSA.gov or call +1-202-482-6800.

PATENT APPLICATION FEE DETERMINATION RECORD

Substitute for Form PTO-875

Application or Docket Number
14/925,441

APPLICATION AS FILED - PART I

FOR	(Column 1) NUMBER FILED	(Column 2) NUMBER EXTRA	SMALL ENTITY RATE($)	SMALL ENTITY FEE($)	OR	OTHER THAN SMALL ENTITY RATE($)	OTHER THAN SMALL ENTITY FEE($)
BASIC FEE (37 CFR 1.16(a), (b), or (c))	N/A	N/A	N/A	70		N/A	
SEARCH FEE (37 CFR 1.16(k), (i), or (m))	N/A	N/A	N/A	300		N/A	
EXAMINATION FEE (37 CFR 1.16(o), (p), or (q))	N/A	N/A	N/A	360		N/A	
TOTAL CLAIMS (37 CFR 1.16(i))	63 minus 20 =	* 43	x 40 =	1720	OR		
INDEPENDENT CLAIMS (37 CFR 1.16(h))	4 minus 3 =	* 1	x 210 =	210			
APPLICATION SIZE FEE (37 CFR 1.16(s))	If the specification and drawings exceed 100 sheets of paper, the application size fee due is $310 ($155 for small entity) for each additional 50 sheets or fraction thereof. See 35 U.S.C. 41(a)(1)(G) and 37 CFR 1.16(s).			0.00			
MULTIPLE DEPENDENT CLAIM PRESENT (37 CFR 1.16(j))				0.00			
* If the difference in column 1 is less than zero, enter "0" in column 2.			TOTAL	2660		TOTAL	

APPLICATION AS AMENDED - PART II

		(Column 1) CLAIMS REMAINING AFTER AMENDMENT		(Column 2) HIGHEST NUMBER PREVIOUSLY PAID FOR	(Column 3) PRESENT EXTRA	SMALL ENTITY RATE($)	SMALL ENTITY ADDITIONAL FEE($)	OR	OTHER THAN SMALL ENTITY RATE($)	OTHER THAN SMALL ENTITY ADDITIONAL FEE($)
AMENDMENT A	Total (37 CFR 1.16(i))	*	Minus	**	=	x =		OR	x =	
	Independent (37 CFR 1.16(h))	*	Minus	***	=	x =		OR	x =	
	Application Size Fee (37 CFR 1.16(s))									
	FIRST PRESENTATION OF MULTIPLE DEPENDENT CLAIM (37 CFR 1.16(j))							OR		
						TOTAL ADD'L FEE		OR	TOTAL ADD'L FEE	

		(Column 1) CLAIMS REMAINING AFTER AMENDMENT		(Column 2) HIGHEST NUMBER PREVIOUSLY PAID FOR	(Column 3) PRESENT EXTRA	RATE($)	ADDITIONAL FEE($)	OR	RATE($)	ADDITIONAL FEE($)
AMENDMENT B	Total (37 CFR 1.16(i))	*	Minus	**	=	x =		OR	x =	
	Independent (37 CFR 1.16(h))	*	Minus	***	=	x =		OR	x =	
	Application Size Fee (37 CFR 1.16(s))									
	FIRST PRESENTATION OF MULTIPLE DEPENDENT CLAIM (37 CFR 1.16(j))							OR		
						TOTAL ADD'L FEE		OR	TOTAL ADD'L FEE	

* If the entry in column 1 is less than the entry in column 2, write "0" in column 3.
** If the "Highest Number Previously Paid For" IN THIS SPACE is less than 20, enter "20".
*** If the "Highest Number Previously Paid For" IN THIS SPACE is less than 3, enter "3".
The "Highest Number Previously Paid For" (Total or Independent) is the highest found in the appropriate box in column 1.

Doc Code: PA..
Document Description: Power of Attorney

PTO/AIA/82B (07-13)
Approved for use through 11/30/2014. OMB 0651-0051
U.S. Patent and Trademark Office; U.S. DEPARTMENT OF COMMERCE
Under the Paperwork Reduction Act of 1995, no persons are required to respond to a collection of information unless it displays a valid OMB control number

POWER OF ATTORNEY BY APPLICANT

I hereby revoke all previous powers of attorney given in the application identified in either the attached transmittal letter or the boxes below.

Application Number	Filing Date

(Note: The boxes above may be left blank if information is provided on form PTO/AIA/82A.)

☑ I hereby appoint the Patent Practitioner(s) associated with the following Customer Number as my/our attorney(s) or agent(s), and to transact all business in the United States Patent and Trademark Office connected therewith for the application referenced in the attached transmittal letter (form PTO/AIA/82A) or identified above: 26629

OR

☐ I hereby appoint Practitioner(s) named in the attached list (form PTO/AIA/82C) as my/our attorney(s) or agent(s), and to transact all business in the United States Patent and Trademark Office connected therewith for the patent application referenced in the attached transmittal letter (form PTO/AIA/82A) or identified above. (Note: Complete form PTO/AIA/82C.)

Please recognize or change the correspondence address for the application identified in the attached transmittal letter or the boxes above to:

☑ The address associated with the above-mentioned Customer Number

OR

☐ The address associated with Customer Number:

OR

Firm or Individual Name					
Address					
City		State		Zip	
Country					
Telephone		Email			

I am the Applicant (if the Applicant is a juristic entity, list the Applicant name in the box):

☐ Inventor or Joint Inventor (title not required below)

☐ Legal Representative of a Deceased or Legally Incapacitated Inventor (title not required below)

☑ Assignee or Person to Whom the Inventor is Under an Obligation to Assign (provide signer's title if applicant is a juristic entity)

☐ Person Who Otherwise Shows Sufficient Proprietary Interest (e.g., a petition under 37 CFR 1.46(b)(2) was granted in the application or is concurrently being filed with this document) (provide signer's title if applicant is a juristic entity)

SIGNATURE of Applicant for Patent

The undersigned (whose title is supplied below) is authorized to act on behalf of the applicant (e.g., where the applicant is a juristic entity).

Signature		Date (Optional)	
Name	Mark J. Sarder		
Title	Vice President of Engineering, Champion Engine Technology, LLC		

NOTE: Signature - This form must be signed by the applicant in accordance with 37 CFR 1.33. See 37 CFR 1.4 for signature requirements and certifications. If more than one applicant, use multiple forms.

☑ Total of 1 forms are submitted.

This collection of information is required by 37 CFR 1.131, 1.32, and 1.33. The information is required to obtain or retain a benefit by the public which is to file (and by the USPTO to process) an application. Confidentiality is governed by 35 U.S.C. 122 and 37 CFR 1.11 and 1.14. This collection is estimated to take 3 minutes to complete, including gathering, preparing, and submitting the completed application form to the USPTO. Time will vary depending upon the individual case. Any comments on the amount of time you require to complete this form and/or suggestions for reducing this burden, should be sent to the Chief Information Officer, U.S. Patent and Trademark Office, U.S. Department of Commerce, P.O. Box 1450, Alexandria, VA 22313-1450. DO NOT SEND FEES OR COMPLETED FORMS TO THIS ADDRESS. **SEND TO: Commissioner for Patents, P.O. Box 1450, Alexandria, VA 22313-1450.**

If you need assistance in completing the form, call 1-800-PTO-9199 and select option 2.

Doc Code: PA..
Document Description: Power of Attorney

PTO/AIA/82A (07-13)
Approved for use through 11/30/2014. OMB 0651-0051
U.S. Patent and Trademark Office; U.S. DEPARTMENT OF COMMERCE
Under the Paperwork Reduction Act of 1995, no persons are required to respond to a collection of information unless it displays a valid OMB control number.

TRANSMITTAL FOR POWER OF ATTORNEY TO ONE OR MORE REGISTERED PRACTITIONERS

NOTE: This form is to be submitted with the Power of Attorney by Applicant form (PTO/AIA/82B) to identify the application to which the Power of Attorney is directed, in accordance with 37 CFR 1.5, unless the application number and filing date are identified in the Power of Attorney by Applicant form. If neither form PTO/AIA/82A nor form PTO/AIA82B identifies the application to which the Power of Attorney is directed, the Power of Attorney will not be recognized in the application.

Application Number	
Filing Date	
First Named Inventor	Kendall J. Collie
Title	BATTERYLESS DUAL FUEL ENGINE WITH LIQUID FUEL CUT-OFF
Art Unit	
Examiner Name	
Attorney Docket Number	CET1090.042

SIGNATURE of Applicant or Patent Practitioner

Signature	/Timothy J. Ziolkowski/	Date (Optional)	
Name	Timothy J. Ziolkowski	Registration Number	38368
Title (if Applicant is a juristic entity)	Patent Practitioner		
Applicant Name (if Applicant is a juristic entity)	Champion Engine Technology, LLC		

NOTE: This form must be signed in accordance with 37 CFR 1.33. See 37 CFR 1.4(d) for signature requirements and certifications. If more than one applicant, use multiple forms.

☑ *Total of 1 forms are submitted.

This collection of information is required by 37 CFR 1.131, 1.32, and 1.33. The information is required to obtain or retain a benefit by the public which is to file (and by the USPTO to process) an application. Confidentiality is governed by 35 U.S.C. 122 and 37 CFR 1.11 and 1.14. This collection is estimated to take 3 minutes to complete, including gathering, preparing, and submitting the completed application form to the USPTO. Time will vary depending upon the individual case. Any comments on the amount of time you require to complete this form and/or suggestions for reducing this burden, should be sent to the Chief Information Officer, U.S. Patent and Trademark Office, U.S. Department of Commerce, P.O. Box 1450, Alexandria, VA 22313-1450. DO NOT SEND FEES OR COMPLETED FORMS TO THIS ADDRESS. **SEND TO: Commissioner for Patents, P.O. Box 1450, Alexandria, VA 22313-1450.**

If you need assistance in completing the form, call 1-800-PTO-9199 and select option 2.

PTO/SB/08a (01-10)
Approved for use through 07/31/2012. OMB 0651-0031
U.S. Patent and Trademark Office; U.S. DEPARTMENT OF COMMERCE
Under the Paperwork Reduction Act of 1995, no persons are required to respond to a collection of information unless it contains a valid OMB control number.

INFORMATION DISCLOSURE STATEMENT BY APPLICANT (Not for submission under 37 CFR 1.99)		
	Application Number	
	Filing Date	
	First Named Inventor	Kendall J. Collie et al.
	Art Unit	
	Examiner Name	
	Attorney Docket Number	CET1090.042

U.S.PATENTS						Remove
Examiner Initial*	Cite No	Patent Number	Kind Code[1]	Issue Date	Name of Patentee or Applicant of cited Document	Pages,Columns,Lines where Relevant Passages or Relevant Figures Appear
	1	2722208		1955-11-01	Conroy, Jr. et al.	
	2	4372276		1983-02-08	Bernhardsson et al.	
	3	4450821		1984-05-29	Venning et al.	
	4	4489699		1984-12-25	Poehlman	
	5	4502453		1985-03-05	Kabasin et al.	
	6	4619240		1986-10-28	Bedford et al.	
	7	4895124		1990-01-23	Bartholomew	
	8	5171487		1992-12-15	Hudz	

INFORMATION DISCLOSURE STATEMENT BY APPLICANT (Not for submission under 37 CFR 1.99)		
	Application Number	
	Filing Date	
	First Named Inventor	Kendall J. Collie et al.
	Art Unit	
	Examiner Name	
	Attorney Docket Number	CET1090.042

	9	5287839		1994-02-22	Kondou et al.	
	10	5320078		1994-06-14	Lorraine	
	11	5379740		1995-01-10	Moore et al.	
	12	5419291		1995-05-30	Kimata et al.	
	13	5438968		1995-08-08	Johnson et al.	
	14	5450832		1995-09-19	Graf	
	15	5673670		1997-10-07	Powell et al.	
	16	5816224		1998-10-06	Welsh et al.	
	17	6082323		2000-07-04	Winberg	
	18	6213083	B1	2001-04-10	Winberg	
	19	6223730	B1	2001-05-01	Hasegawa et al.	

INFORMATION DISCLOSURE STATEMENT BY APPLICANT (Not for submission under 37 CFR 1.99)		
	Application Number	
	Filing Date	
	First Named Inventor	Kendall J. Collie et al.
	Art Unit	
	Examiner Name	
	Attorney Docket Number	CET1090.042

	20	6276345	B1	2001-08-21	Nelson et al.	
	21	6401685	B1	2002-06-11	Warner	
	22	6453877	B1	2002-09-24	Lucier et al.	
	23	6914342	B1	2005-07-05	French	
	24	7905469	B2	2011-03-15	Nickels et al.	
	25	8342158	B2	2013-01-01	Ulrey et al.	
	26	8590510	B2	2013-11-26	Surnilla et al.	
	27	5161496		1992-11-10	Matsushima et al.	
	28	5325835		1994-07-05	Kimata et al.	

If you wish to add additional U.S. Patent citation information please click the Add button. Add

U.S.PATENT APPLICATION PUBLICATIONS Remove

Examiner Initial*	Cite No	Publication Number	Kind Code[1]	Publication Date	Name of Patentee or Applicant of cited Document	Pages,Columns,Lines where Relevant Passages or Relevant Figures Appear

INFORMATION DISCLOSURE STATEMENT BY APPLICANT (Not for submission under 37 CFR 1.99)	Application Number	
	Filing Date	
	First Named Inventor	Kendall J. Collie et al.
	Art Unit	
	Examiner Name	
	Attorney Docket Number	CET1090.042

	1	20130047964	A1	2013-02-28	Kim	
	2	20130220274	A1	2013-08-29	Deshpande et al.	

If you wish to add additional U.S. Published Application citation information please click the Add button. Add

FOREIGN PATENT DOCUMENTS Remove

Examiner Initial*	Cite No	Foreign Document Number[3]	Country Code[2] ¡	Kind Code[4]	Publication Date	Name of Patentee or Applicant of cited Document	Pages,Columns,Lines where Relevant Passages or Relevant Figures Appear	T[5]
	1							☐

If you wish to add additional Foreign Patent Document citation information please click the Add button Add

NON-PATENT LITERATURE DOCUMENTS Remove

Examiner Initials*	Cite No	Include name of the author (in CAPITAL LETTERS), title of the article (when appropriate), title of the item (book, magazine, journal, serial, symposium, catalog, etc), date, pages(s), volume-issue number(s), publisher, city and/or country where published.	T[5]
	1	Honda EU20i LPG, March 20, 2012, https://www.youtube.com/watch?v=yBpq33aJmR0	☐
	2	JOHNSON et al., "Electronic Direct Fuel Injection (EDFI) for Small Two-Stroke Engines," SAE Technical Paper 1999-01-3312, Proceedings of the 1999 SAE Small Engine Technology Conference, Madison, WI, September 28-30, 1999, pp. 1-15	☐

If you wish to add additional non-patent literature document citation information please click the Add button Add

EXAMINER SIGNATURE

Examiner Signature		Date Considered	

*EXAMINER: Initial if reference considered, whether or not citation is in conformance with MPEP 609. Draw line through a citation if not in conformance and not considered. Include copy of this form with next communication to applicant.

INFORMATION DISCLOSURE STATEMENT BY APPLICANT (Not for submission under 37 CFR 1.99)	Application Number	
	Filing Date	
	First Named Inventor	Kendall J. Collie et al.
	Art Unit	
	Examiner Name	
	Attorney Docket Number	CET1090.042

[1] See Kind Codes of USPTO Patent Documents at www.USPTO.GOV or MPEP 901.04. [2] Enter office that issued the document, by the two-letter code (WIPO Standard ST.3). [3] For Japanese patent documents, the indication of the year of the reign of the Emperor must precede the serial number of the patent document. [4] Kind of document by the appropriate symbols as indicated on the document under WIPO Standard ST.16 if possible. [5] Applicant is to place a check mark here if English language translation is attached.

INFORMATION DISCLOSURE STATEMENT BY APPLICANT (Not for submission under 37 CFR 1.99)	Application Number	
	Filing Date	
	First Named Inventor	Kendall J. Collie et al.
	Art Unit	
	Examiner Name	
	Attorney Docket Number	CET1090.042

CERTIFICATION STATEMENT

Please see 37 CFR 1.97 and 1.98 to make the appropriate selection(s):

☐ That each item of information contained in the information disclosure statement was first cited in any communication from a foreign patent office in a counterpart foreign application not more than three months prior to the filing of the information disclosure statement. See 37 CFR 1.97(e)(1).

OR

☐ That no item of information contained in the information disclosure statement was cited in a communication from a foreign patent office in a counterpart foreign application, and, to the knowledge of the person signing the certification after making reasonable inquiry, no item of information contained in the information disclosure statement was known to any individual designated in 37 CFR 1.56(c) more than three months prior to the filing of the information disclosure statement. See 37 CFR 1.97(e)(2).

☐ See attached certification statement.

☐ The fee set forth in 37 CFR 1.17 (p) has been submitted herewith.

☐ A certification statement is not submitted herewith.

SIGNATURE

A signature of the applicant or representative is required in accordance with CFR 1.33, 10.18. Please see CFR 1.4(d) for the form of the signature.

Signature	/Timothy J. Ziolkowski/	Date (YYYY-MM-DD)	2015-10-28
Name/Print	Timothy J. Ziolkowski	Registration Number	38368

This collection of information is required by 37 CFR 1.97 and 1.98. The information is required to obtain or retain a benefit by the public which is to file (and by the USPTO to process) an application. Confidentiality is governed by 35 U.S.C. 122 and 37 CFR 1.14. This collection is estimated to take 1 hour to complete, including gathering, preparing and submitting the completed application form to the USPTO. Time will vary depending upon the individual case. Any comments on the amount of time you require to complete this form and/or suggestions for reducing this burden, should be sent to the Chief Information Officer, U.S. Patent and Trademark Office, U.S. Department of Commerce, P.O. Box 1450, Alexandria, VA 22313-1450. DO NOT SEND FEES OR COMPLETED FORMS TO THIS ADDRESS. **SEND TO: Commissioner for Patents, P.O. Box 1450, Alexandria, VA 22313-1450.**

Privacy Act Statement

The Privacy Act of 1974 (P.L. 93-579) requires that you be given certain information in connection with your submission of the attached form related to a patent application or patent. Accordingly, pursuant to the requirements of the Act, please be advised that: (1) the general authority for the collection of this information is 35 U.S.C. 2(b)(2); (2) furnishing of the information solicited is voluntary; and (3) the principal purpose for which the information is used by the U.S. Patent and Trademark Office is to process and/or examine your submission related to a patent application or patent. If you do not furnish the requested information, the U.S. Patent and Trademark Office may not be able to process and/or examine your submission, which may result in termination of proceedings or abandonment of the application or expiration of the patent.

The information provided by you in this form will be subject to the following routine uses:

1. The information on this form will be treated confidentially to the extent allowed under the Freedom of Information Act (5 U.S.C. 552) and the Privacy Act (5 U.S.C. 552a). Records from this system of records may be disclosed to the Department of Justice to determine whether the Freedom of Information Act requires disclosure of these record s.

2. A record from this system of records may be disclosed, as a routine use, in the course of presenting evidence to a court, magistrate, or administrative tribunal, including disclosures to opposing counsel in the course of settlement negotiations.

3. A record in this system of records may be disclosed, as a routine use, to a Member of Congress submitting a request involving an individual, to whom the record pertains, when the individual has requested assistance from the Member with respect to the subject matter of the record.

4. A record in this system of records may be disclosed, as a routine use, to a contractor of the Agency having need for the information in order to perform a contract. Recipients of information shall be required to comply with the requirements of the Privacy Act of 1974, as amended, pursuant to 5 U.S.C. 552a(m).

5. A record related to an International Application filed under the Patent Cooperation Treaty in this system of records may be disclosed, as a routine use, to the International Bureau of the World Intellectual Property Organization, pursuant to the Patent Cooperation Treaty.

6. A record in this system of records may be disclosed, as a routine use, to another federal agency for purposes of National Security review (35 U.S.C. 181) and for review pursuant to the Atomic Energy Act (42 U.S.C. 218(c)).

7. A record from this system of records may be disclosed, as a routine use, to the Administrator, General Services, or his/her designee, during an inspection of records conducted by GSA as part of that agency's responsibility to recommend improvements in records management practices and programs, under authority of 44 U.S.C. 2904 and 2906. Such disclosure shall be made in accordance with the GSA regulations governing inspection of records for this purpose, and any other relevant (i.e., GSA or Commerce) directive. Such disclosure shall not be used to make determinations about individuals.

8. A record from this system of records may be disclosed, as a routine use, to the public after either publication of the application pursuant to 35 U.S.C. 122(b) or issuance of a patent pursuant to 35 U.S.C. 151. Further, a record may be disclosed, subject to the limitations of 37 CFR 1.14, as a routine use, to the public if the record was filed in an application which became abandoned or in which the proceedings were terminated and which application is referenced by either a published application, an application open to public inspections or an issued patent.

9. A record from this system of records may be disclosed, as a routine use, to a Federal, State, or local law enforcement agency, if the USPTO becomes aware of a violation or potential violation of law or regulation.

Electronic Patent Application Fee Transmittal

Application Number:	
Filing Date:	
Title of Invention:	BATTERYLESS DUAL FUEL ENGINE WITH LIQUID FUEL CUT-OFF
First Named Inventor/Applicant Name:	Kendall J. Collie
Filer:	Timothy J. Ziolkowski/Robyn Templin
Attorney Docket Number:	CET1090.042

Filed as Small Entity

Filing Fees for Utility under 35 USC 111(a)

Description	Fee Code	Quantity	Amount	Sub-Total in USD($)
Basic Filing:				
Utility filing Fee (Electronic filing)	4011	1	70	70
Utility Search Fee	2111	1	300	300
Utility Examination Fee	2311	1	360	360
Pages:				
Claims:				
Claims in excess of 20	2202	43	40	1720
Independent Claims in Excess of 3	2201	1	210	210
Miscellaneous-Filing:				

Description	Fee Code	Quantity	Amount	Sub-Total in USD($)
Petition:				
Patent-Appeals-and-Interference:				
Post-Allowance-and-Post-Issuance:				
Extension-of-Time:				
Miscellaneous:				
			Total in USD ($)	**2660**

Electronic Acknowledgement Receipt

EFS ID:	23919568
Application Number:	14925441
International Application Number:	
Confirmation Number:	1059
Title of Invention:	BATTERYLESS DUAL FUEL ENGINE WITH LIQUID FUEL CUT-OFF
First Named Inventor/Applicant Name:	Kendall J. Collie
Customer Number:	26629
Filer:	Timothy J. Ziolkowski/Robyn Templin
Filer Authorized By:	Timothy J. Ziolkowski
Attorney Docket Number:	CET1090.042
Receipt Date:	28-OCT-2015
Filing Date:	
Time Stamp:	16:10:03
Application Type:	Utility under 35 USC 111(a)

Payment information:

Submitted with Payment	yes
Payment Type	Credit Card
Payment was successfully received in RAM	$ 2660
RAM confirmation Number	2969
Deposit Account	
Authorized User	

The Director of the USPTO is hereby authorized to charge indicated fees and credit any overpayment as follows:

File Listing:

Document Number	Document Description	File Name	File Size(Bytes)/ Message Digest	Multi Part /.zip	Pages (if appl.)
1	Application Data Sheet	App-ADS.pdf	1561237 e60d5343aa35f4039516ebedd0096438041323de	no	8
Warnings:					
Information:					
2		App-Body.pdf	236188 9aa031b1499b5f235121ebeddc3dd3d676ae5900	yes	46

Multipart Description/PDF files in .zip description

Document Description	Start	End
Specification	1	35
Claims	36	45
Abstract	46	46

Warnings:					
Information:					
3	Oath or Declaration filed	App-Dec.pdf	2256665 2ad2baa6b76fcbff5cf4000e98a3240793e0c2d3f	no	6
Warnings:					
Information:					
4	Drawings-only black and white line drawings	App-Drawings.pdf	2825649 e781c2aa1a9855ad1bdf2c6a38adebc068221fa3	no	12
Warnings:					
Information:					
5	Power of Attorney	POATransmittal.pdf	156828 a3a8961512291df821d8581c83e00232c8a618d4	no	1
Warnings:					
Information:					
6	Power of Attorney	GeneralPOA.pdf	447239 [illegible]	no	1

Warnings:					
Information:					
7	Information Disclosure Statement (IDS) Form (SB08)	IDS.pdf	613256 871a36359c120ffc49878d9374f914f529cc49f2	no	7
Warnings:					
Information:					
8	Non Patent Literature	NPL1-HONDA_EU20i_LPG.pdf	15304933 ab3bddf9b920529fa110a17a5b7c5436961daabe	no	3
Warnings:					
Information:					
9	Non Patent Literature	NPL2-Johnson-Electronic_Direct_Fuel_Injection.pdf	414792 fb1a5b3aa5b1053ee0c5f24678e329b555464f3b	no	17
Warnings:					
Information:					
10	Fee Worksheet (SB06)	fee-info.pdf	38632 60875fcfbb7ac2f413b604c7633870b0532918d7	no	2
Warnings:					
Information:					
		Total Files Size (in bytes):	23855419		

This Acknowledgement Receipt evidences receipt on the noted date by the USPTO of the indicated documents, characterized by the applicant, and including page counts, where applicable. It serves as evidence of receipt similar to a Post Card, as described in MPEP 503.

New Applications Under 35 U.S.C. 111
If a new application is being filed and the application includes the necessary components for a filing date (see 37 CFR 1.53(b)-(d) and MPEP 506), a Filing Receipt (37 CFR 1.54) will be issued in due course and the date shown on this Acknowledgement Receipt will establish the filing date of the application.

National Stage of an International Application under 35 U.S.C. 371
If a timely submission to enter the national stage of an international application is compliant with the conditions of 35 U.S.C. 371 and other applicable requirements a Form PCT/DO/EO/903 indicating acceptance of the application as a national stage submission under 35 U.S.C. 371 will be issued in addition to the Filing Receipt, in due course.

New International Application Filed with the USPTO as a Receiving Office
If a new international application is being filed and the international application includes the necessary components for an international filing date (see PCT Article 11 and MPEP 1810), a Notification of the International Application Number and of the International Filing Date (Form PCT/RO/105) will be issued in due course, subject to prescriptions concerning national security, and the date shown on this Acknowledgement Receipt will establish the international filing date of the application.

Under the Paperwork Reduction Act of 1995, no persons are required to respond to a collection of information unless it contains a valid OMB control number.

Application Data Sheet 37 CFR 1.76	Attorney Docket Number	CET1090.042
	Application Number	
Title of Invention	BATTERYLESS DUAL FUEL ENGINE WITH LIQUID FUEL CUT-OFF	

The application data sheet is part of the provisional or nonprovisional application for which it is being submitted. The following form contains the bibliographic data arranged in a format specified by the United States Patent and Trademark Office as outlined in 37 CFR 1.76.
This document may be completed electronically and submitted to the Office in electronic format using the Electronic Filing System (EFS) or the document may be printed and included in a paper filed application.

Secrecy Order 37 CFR 5.2

☐ Portions or all of the application associated with this Application Data Sheet may fall under a Secrecy Order pursuant to 37 CFR 5.2 (Paper filers only. Applications that fall under Secrecy Order may not be filed electronically.)

Inventor Information:

Inventor 1 Remove

Legal Name

Prefix	Given Name	Middle Name	Family Name	Suffix
	Kendall	J.	Collie	

Residence Information (Select One) ◉ US Residency ◯ Non US Residency ◯ Active US Military Service

City	Anaheim Hills	State/Province	CA	Country of Residence i	US

Mailing Address of Inventor:

Address 1	751 S Weir Canyon Rd, Suite 157 PMB 391		
Address 2			
City	Anaheim Hills	State/Province	CA
Postal Code	92809	Country i	US

Inventor 2 Remove

Legal Name

Prefix	Given Name	Middle Name	Family Name	Suffix
	Mark	J.	Sarder	

Residence Information (Select One) ◉ US Residency ◯ Non US Residency ◯ Active US Military Service

City	Waukesha	State/Province	WI	Country of Residence i	US

Mailing Address of Inventor:

Address 1	W245 N5551 Corporate Circle		
Address 2			
City	Sussex	State/Province	WI
Postal Code	53089	Country i	US

Inventor 3 Remove

Legal Name

Prefix	Given Name	Middle Name	Family Name	Suffix
	Aleko	D.	Sotiriades	

Residence Information (Select One) ◉ US Residency ◯ Non US Residency ◯ Active US Military Service

Under the Paperwork Reduction Act of 1995, no persons are required to respond to a collection of information unless it contains a valid OMB control number.

Application Data Sheet 37 CFR 1.76	Attorney Docket Number	CET1090.042
	Application Number	
Title of Invention	BATTERYLESS DUAL FUEL ENGINE WITH LIQUID FUEL CUT-OFF	

City	Cedarburg	State/Province	WI	Country of Residence i	US

Mailing Address of Inventor:

Address 1	W245 N5551 Corporate Circle		
Address 2			
City	Sussex	State/Province	WI
Postal Code	53089	Country i	US

Inventor 4 Remove

Legal Name

Prefix	Given Name	Middle Name	Family Name	Suffix
	James	J.	Dehn	

Residence Information (Select One) (•) US Residency ( ) Non US Residency ( ) Active US Military Service

City	Brookfield	State/Province	WI	Country of Residence i	US

Mailing Address of Inventor:

Address 1	W245 N5551 Corporate Circle		
Address 2			
City	Sussex	State/Province	WI
Postal Code	53089	Country i	US

Inventor 5 Remove

Legal Name

Prefix	Given Name	Middle Name	Family Name	Suffix
	Leigh		Jenison	

Residence Information (Select One) (•) US Residency ( ) Non US Residency ( ) Active US Military Service

City	Hartland	State/Province	WI	Country of Residence i	US

Mailing Address of Inventor:

Address 1	W245 N5551 Corporate Circle		
Address 2			
City	Sussex	State/Province	WI
Postal Code	53089	Country i	US

Inventor 6 Remove

Legal Name

Prefix	Given Name	Middle Name	Family Name	Suffix
	Hiroaki		Sato	

Residence Information (Select One) (•) US Residency ( ) Non US Residency ( ) Active US Military Service

City	Brookfield	State/Province	WI	Country of Residence i	US

Champion - EX2082, Page 505 of 575
Harbor Freight Tools USA Inc. et al v. Champion Power Equip., Inc.
IPR2025-01121

Under the Paperwork Reduction Act of 1995, no persons are required to respond to a collection of information unless it contains a valid OMB control number.

Application Data Sheet 37 CFR 1.76	Attorney Docket Number	CET1090.042
	Application Number	
Title of Invention	BATTERYLESS DUAL FUEL ENGINE WITH LIQUID FUEL CUT-OFF	

Mailing Address of Inventor:			
Address 1	W245 N5551 Corporate Circle		
Address 2			
City	Sussex	**State/Province**	WI
Postal Code	53089	**Country** i	US

All Inventors Must Be Listed - Additional Inventor Information blocks may be generated within this form by selecting the **Add** button. Add

Correspondence Information:

Enter either Customer Number or complete the Correspondence Information section below. For further information see 37 CFR 1.33(a).

☐ **An Address is being provided for the correspondence Information of this application.**

Customer Number	26629		
Email Address		Add Email	Remove Email

Application Information:

Title of the Invention	BATTERYLESS DUAL FUEL ENGINE WITH LIQUID FUEL CUT-OFF		
Attorney Docket Number	CET1090.042	**Small Entity Status Claimed**	☒
Application Type	Nonprovisional		
Subject Matter	Utility		
Total Number of Drawing Sheets (if any)		**Suggested Figure for Publication (if any)**	

Filing By Reference :

Only complete this section when filing an application by reference under 35 U.S.C. 111(c) and 37 CFR 1.57(a). Do not complete this section if application papers including a specification and any drawings are being filed. Any domestic benefit or foreign priority information must be provided in the appropriate section(s) below (i.e., "Domestic Benefit/National Stage Information" and "Foreign Priority Information").

For the purposes of a filing date under 37 CFR 1.53(b), the description and any drawings of the present application are replaced by this reference to the previously filed application, subject to conditions and requirements of 37 CFR 1.57(a).

Application number of the previously filed application	Filing date (YYYY-MM-DD)	Intellectual Property Authority or Country i

Publication Information:

☐ Request Early Publication (Fee required at time of Request 37 CFR 1.219)

☐ **Request Not to Publish.** I hereby request that the attached application not be published under 35 U.S.C. 122(b) and certify that the invention disclosed in the attached application **has not and will not** be the subject of an application filed in another country, or under a multilateral international agreement, that requires publication at eighteen months after filing.

Under the Paperwork Reduction Act of 1995, no persons are required to respond to a collection of information unless it contains a valid OMB control number.

Application Data Sheet 37 CFR 1.76	Attorney Docket Number	CET1090.042
	Application Number	
Title of Invention	BATTERYLESS DUAL FUEL ENGINE WITH LIQUID FUEL CUT-OFF	

Representative Information:

Representative information should be provided for all practitioners having a power of attorney in the application. Providing this information in the Application Data Sheet does not constitute a power of attorney in the application (see 37 CFR 1.32).
Either enter Customer Number or complete the Representative Name section below. If both sections are completed the customer Number will be used for the Representative Information during processing.

Please Select One:	◉ Customer Number	◯ US Patent Practitioner	◯ Limited Recognition (37 CFR 11.9)
Customer Number	26629		

Domestic Benefit/National Stage Information:

This section allows for the applicant to either claim benefit under 35 U.S.C. 119(e), 120, 121, or 365(c) or indicate National Stage entry from a PCT application. Providing this information in the application data sheet constitutes the specific reference required by 35 U.S.C. 119(e) or 120, and 37 CFR 1.78.
When referring to the current application, please leave the application number blank.

Prior Application Status	Pending		Remove
Application Number	Continuity Type	Prior Application Number	Filing Date (YYYY-MM-DD)
	Continuation in part of	14738060	2015-06-12
Prior Application Status			Remove
Application Number	Continuity Type	Prior Application Number	Filing Date (YYYY-MM-DD)

Additional Domestic Benefit/National Stage Data may be generated within this form by selecting the **Add** button. Add

Foreign Priority Information:

This section allows for the applicant to claim priority to a foreign application. Providing this information in the application data sheet constitutes the claim for priority as required by 35 U.S.C. 119(b) and 37 CFR 1.55(d). When priority is claimed to a foreign application that is eligible for retrieval under the priority document exchange program (PDX) [i] the information will be used by the Office to automatically attempt retrieval pursuant to 37 CFR 1.55(h)(1) and (2). Under the PDX program, applicant bears the ultimate responsibility for ensuring that a copy of the foreign application is received by the Office from the participating foreign intellectual property office, or a certified copy of the foreign priority application is filed, within the time period specified in 37 CFR 1.55(g)(1).

			Remove
Application Number	Country [i]	Filing Date (YYYY-MM-DD)	Access Code [i] (if applicable)

Additional Foreign Priority Data may be generated within this form by selecting the **Add** button. Add

Under the Paperwork Reduction Act of 1995, no persons are required to respond to a collection of information unless it contains a valid OMB control number.

Application Data Sheet 37 CFR 1.76	Attorney Docket Number	CET1090.042
	Application Number	
Title of Invention	BATTERYLESS DUAL FUEL ENGINE WITH LIQUID FUEL CUT-OFF	

Statement under 37 CFR 1.55 or 1.78 for AIA (First Inventor to File) Transition Applications

☐ This application (1) claims priority to or the benefit of an application filed before March 16, 2013 and (2) also contains, or contained at any time, a claim to a claimed invention that has an effective filing date on or after March 16, 2013.
NOTE: By providing this statement under 37 CFR 1.55 or 1.78, this application, with a filing date on or after March 16, 2013, will be examined under the first inventor to file provisions of the AIA.

Authorization to Permit Access:

☒ Authorization to Permit Access to the Instant Application by the Participating Offices

If checked, the undersigned hereby grants the USPTO authority to provide the European Patent Office (EPO), the Japan Patent Office (JPO), the Korean Intellectual Property Office (KIPO), the World Intellectual Property Office (WIPO), and any other intellectual property offices in which a foreign application claiming priority to the instant patent application is filed access to the instant patent application. See 37 CFR 1.14(c) and (h). This box should not be checked if the applicant does not wish the EPO, JPO, KIPO, WIPO, or other intellectual property office in which a foreign application claiming priority to the instant patent application is filed to have access to the instant patent application.

In accordance with 37 CFR 1.14(h)(3), access will be provided to a copy of the instant patent application with respect to: 1) the instant patent application-as-filed; 2) any foreign application to which the instant patent application claims priority under 35 U.S.C. 119(a)-(d) if a copy of the foreign application that satisfies the certified copy requirement of 37 CFR 1.55 has been filed in the instant patent application; and 3) any U.S. application-as-filed from which benefit is sought in the instant patent application.

In accordance with 37 CFR 1.14(c), access may be provided to information concerning the date of filing this Authorization.

Applicant Information:

Providing assignment information in this section does not substitute for compliance with any requirement of part 3 of Title 37 of CFR to have an assignment recorded by the Office.

Under the Paperwork Reduction Act of 1995, no persons are required to respond to a collection of information unless it contains a valid OMB control number.

Application Data Sheet 37 CFR 1.76	Attorney Docket Number	CET1090.042
	Application Number	
Title of Invention	BATTERYLESS DUAL FUEL ENGINE WITH LIQUID FUEL CUT-OFF	

Applicant 1 Remove

If the applicant is the inventor (or the remaining joint inventor or inventors under 37 CFR 1.45), this section should not be completed. The information to be provided in this section is the name and address of the legal representative who is the applicant under 37 CFR 1.43; or the name and address of the assignee, person to whom the inventor is under an obligation to assign the invention, or person who otherwise shows sufficient proprietary interest in the matter who is the applicant under 37 CFR 1.46. If the applicant is an applicant under 37 CFR 1.46 (assignee, person to whom the inventor is obligated to assign, or person who otherwise shows sufficient proprietary interest) together with one or more joint inventors, then the joint inventor or inventors who are also the applicant should be identified in this section.

Clear

- (●) Assignee
- ( ) Legal Representative under 35 U.S.C. 117
- ( ) Joint Inventor
- ( ) Person to whom the inventor is obligated to assign.
- ( ) Person who shows sufficient proprietary interest

If applicant is the legal representative, indicate the authority to file the patent application, the inventor is:

Name of the Deceased or Legally Incapacitated Inventor :

If the Applicant is an Organization check here. [X]

Organization Name	Champion Engine Technology, LLC		
Mailing Address Information:			
Address 1	W245 N5551 Corporate Circle		
Address 2			
City	Sussex	**State/Province**	WI
Country i	US	Postal Code	53089
Phone Number		Fax Number	
Email Address			

Additional Applicant Data may be generated within this form by selecting the Add button. Add

Assignee Information including Non-Applicant Assignee Information:

Providing assignment information in this section does not subsitute for compliance with any requirement of part 3 of Title 37 of CFR to have an assignment recorded by the Office.

Assignee 1

Complete this section if assignee information, including non-applicant assignee information, is desired to be included on the patent application publication . An assignee-applicant identified in the "Applicant Information" section will appear on the patent application publication as an applicant. For an assignee-applicant, complete this section only if identification as an assignee is also desired on the patent application publication.

Remove

If the Assignee or Non-Applicant Assignee is an Organization check here. [ ]

Under the Paperwork Reduction Act of 1995, no persons are required to respond to a collection of information unless it contains a valid OMB control number.

Application Data Sheet 37 CFR 1.76	Attorney Docket Number	CET1090.042
	Application Number	
Title of Invention	BATTERYLESS DUAL FUEL ENGINE WITH LIQUID FUEL CUT-OFF	

Prefix	**Given Name**	Middle Name	**Family Name**	Suffix

Mailing Address Information For Assignee including Non-Applicant Assignee:

Address 1			
Address 2			
City		**State/Province**	
Country i		Postal Code	
Phone Number		Fax Number	
Email Address			

Additional Assignee or Non-Applicant Assignee Data may be generated within this form by selecting the Add button. Add

Signature:

Remove

NOTE: This form must be signed in accordance with 37 CFR 1.33. See 37 CFR 1.4 for signature requirements and certifications

Signature	/Timothy J. Ziolkowski/			Date (YYYY-MM-DD)	2015-10-28
First Name	Timothy J.	Last Name	Ziolkowski	Registration Number	38368

Additional Signature may be generated within this form by selecting the Add button. Add

This collection of information is required by 37 CFR 1.76. The information is required to obtain or retain a benefit by the public which is to file (and by the USPTO to process) an application. Confidentiality is governed by 35 U.S.C. 122 and 37 CFR 1.14. This collection is estimated to take 23 minutes to complete, including gathering, preparing, and submitting the completed application data sheet form to the USPTO. Time will vary depending upon the individual case. Any comments on the amount of time you require to complete this form and/or suggestions for reducing this burden, should be sent to the Chief Information Officer, U.S. Patent and Trademark Office, U.S. Department of Commerce, P.O. Box 1450, Alexandria, VA 22313-1450. DO NOT SEND FEES OR COMPLETED FORMS TO THIS ADDRESS. **SEND TO: Commissioner for Patents, P.O. Box 1450, Alexandria, VA 22313-1450.**

Privacy Act Statement

The Privacy Act of 1974 (P.L. 93-579) requires that you be given certain information in connection with your submission of the attached form related to a patent application or patent. Accordingly, pursuant to the requirements of the Act, please be advised that: (1) the general authority for the collection of this information is 35 U.S.C. 2(b)(2); (2) furnishing of the information solicited is voluntary; and (3) the principal purpose for which the information is used by the U.S. Patent and Trademark Office is to process and/or examine your submission related to a patent application or patent. If you do not furnish the requested information, the U.S. Patent and Trademark Office may not be able to process and/or examine your submission, which may result in termination of proceedings or abandonment of the application or expiration of the patent.

The information provided by you in this form will be subject to the following routine uses:

1. The information on this form will be treated confidentially to the extent allowed under the Freedom of Information Act (5 U.S.C. 552) and the Privacy Act (5 U.S.C. 552a). Records from this system of records may be disclosed to the Department of Justice to determine whether the Freedom of Information Act requires disclosure of these records.

2. A record from this system of records may be disclosed, as a routine use, in the course of presenting evidence to a court, magistrate, or administrative tribunal, including disclosures to opposing counsel in the course of settlement negotiations.

3. A record in this system of records may be disclosed, as a routine use, to a Member of Congress submitting a request involving an individual, to whom the record pertains, when the individual has requested assistance from the Member with respect to the subject matter of the record.

4. A record in this system of records may be disclosed, as a routine use, to a contractor of the Agency having need for the information in order to perform a contract. Recipients of information shall be required to comply with the requirements of the Privacy Act of 1974, as amended, pursuant to 5 U.S.C. 552a(m).

5. A record related to an International Application filed under the Patent Cooperation Treaty in this system of records may be disclosed, as a routine use, to the International Bureau of the World Intellectual Property Organization, pursuant to the Patent Cooperation Treaty.

6. A record in this system of records may be disclosed, as a routine use, to another federal agency for purposes of National Security review (35 U.S.C. 181) and for review pursuant to the Atomic Energy Act (42 U.S.C. 218(c)).

7. A record from this system of records may be disclosed, as a routine use, to the Administrator, General Services, or his/her designee, during an inspection of records conducted by GSA as part of that agency's responsibility to recommend improvements in records management practices and programs, under authority of 44 U.S.C. 2904 and 2906. Such disclosure shall be made in accordance with the GSA regulations governing inspection of records for this purpose, and any other relevant (i.e., GSA or Commerce) directive. Such disclosure shall not be used to make determinations about individuals.

8. A record from this system of records may be disclosed, as a routine use, to the public after either publication of the application pursuant to 35 U.S.C. 122(b) or issuance of a patent pursuant to 35 U.S.C. 151. Further, a record may be disclosed, subject to the limitations of 37 CFR 1.14, as a routine use, to the public if the record was filed in an application which became abandoned or in which the proceedings were terminated and which application is referenced by either a published application, an application open to public inspections or an issued patent.

9. A record from this system of records may be disclosed, as a routine use, to a Federal, State, or local law enforcement agency, if the USPTO becomes aware of a violation or potential violation of law or regulation.

BATTERYLESS DUAL FUEL ENGINE WITH LIQUID FUEL CUT-OFF

CROSS-REFERENCE TO RELATED APPLICATION

[0001] The present application is a continuation-in-part of, and claims priority to, U.S. Patent Application Serial No. 14/738,060, filed June 12, 2015, the disclosure of which is incorporated herein by reference in its entirety.

BACKGROUND OF THE INVENTION

[0002] Embodiments of the invention relate generally to dual fuel generators, and more particularly, to an apparatus and method for delivering liquid fuel or gaseous fuel to a dual fuel generator.

[0003] Electric generators are frequently driven by internal combustion engines that use gasoline as a fuel source. Gasoline is a common fuel source for generators in a variety of applications. However, alternative fuel sources also provide a desirable fuel source. For instance, alternative fuels may provide a clean burning fuel that limits hazardous emissions. Alternative fuels may also be stored for long periods of time without degradation, whereas gasoline can degrade over a period of months leading to hard starting, rough running, and also lead to gum and varnish deposit left in the fuel system. In addition, generators that operate on alternative fuels may generate electricity when gasoline is not readily available. For instance, generators are frequently used when power outages in the utility grid result from severe weather. Unfortunately, gas stations may also be closed as a result of the power outage. Such a circumstance presents just one example where it would be advantageous to operate electrical generators on alternative fuels.

[0004] Certain generators are configured to operate as "dual fuel" generators, otherwise known as bi-fuel generators. These generators are driven by an internal combustion engine that is configured to operate on a liquid fuel for a period of operation and an alternative fuel for another period of operation. The alternative fuel source is generally a gaseous fuel that may exist in a gaseous state at normal temperature and pressure and can be any one of liquefied petroleum gas, compressed natural gas,

hydrogen, or the like. Liquefied petroleum gas (LPG), often referred to as propane, exists in a gaseous state at normal temperature and pressure but can be conveniently stored under pressure in a liquid state. LPG may be a desirable fuel source for internal combustion engines because it can be stored for longer periods of time and contains fewer impurities than gasoline, resulting in smoother and cleaner operation, and often resulting in a longer lasting engine.

[0005] In order to provide the liquid and gaseous fuel to the engine, the dual fuel engine may have a first fuel line for liquid fuel and a second fuel line for gaseous fuel. A liquid fuel source and a gaseous fuel source may be coupled to the respective lines to provide fuel to the engine. However, a common problem with such configurations that couple two fuel sources to a single engine is the engine can experience overly rich air-fuel ratio when both fuels are simultaneously engaged during cross-over switching between the fuel sources. Such simultaneous delivery of fuel from the first fuel line and the second fuel line may make the engine hard to start or lead to unstable operating conditions. Further, a float bowl in the carburetor that must first fill or empty prior to changeover causes delay in cross-over switching between the fuel sources.

[0006] Therefore, it would be desirable to design a dual fuel generator having a liquid fuel and gaseous fuel delivery system that overcomes the aforementioned detriments without substantially increasing the overall cost of the system.

BRIEF DESCRIPTION OF THE INVENTION

[0007] In accordance with one aspect of the invention, a dual fuel engine includes an engine operable on a gaseous fuel and a liquid fuel. A carburetor attaches to an intake of the engine to mix air and fuel and connect to a gaseous fuel source and a liquid fuel source. The dual fuel engine also includes a switch to change operation of the engine between gaseous fuel and liquid fuel, and a liquid fuel cut-off attaches to the carburetor to interrupt liquid fuel upon actuation of the switch from liquid fuel to gaseous fuel.

[0008] In accordance with another aspect of the invention, a batteryless dual fuel generator includes a housing containing a pull start engine coupled to drive an alternator. The engine is operable on a gaseous fuel and a liquid fuel and includes a carburetor attached to an intake of the engine. The carburetor has a throat to mix fuel with air, a float bowl, and a fuel passage to provide liquid fuel from the float bowl to the throat. The generator may also include a switch to select engine operation on either the liquid fuel or the gaseous fuel and a fuel shutoff attached to the carburetor to close the fuel passage upon selection of engine operation to gaseous fuel.

[0009] In accordance with yet another aspect of the invention, a carburetor having a fuel shutoff includes a carburetor with a float bowl, a throat, and a fuel passage to provide fuel from the float bowl to the throat. A fuel shutoff couples to the carburetor which may have a first end in the carburetor that actuates to close the fuel passage and a second end external to the carburetor to actuate the first end. The fuel shutoff may operate within the carburetor such that the fuel shutoff actuates free from linear motion when opening and closing the fuel passage.

[0010] In accordance with yet another aspect of the invention, a method of assembling a dual fuel engine includes providing an engine operable on a gaseous fuel and a liquid fuel and attaching a carburetor to an intake of the engine to supply the fuels to the engine. The carburetor includes a throat to mix gaseous fuel with air and liquid fuel with air, a float bowl, and a fuel passage to provide liquid fuel from the float bowl to the throat. The fuels may be supplied to the carburetor by a gaseous fuel source coupled to the throat and a liquid fuel source coupled to the float bowl. The method

also includes coupling a switch to the engine to change operation of the engine between gaseous fuel and liquid fuel, and attaching a liquid fuel cut-off to the carburetor to close the fuel passage upon actuation of the switch from liquid fuel to gaseous fuel.

[0011] Various other features and advantages will be made apparent from the following detailed description and the drawings.

BRIEF DESCRIPTION OF THE DRAWINGS

[0012] The drawings illustrate preferred embodiments presently contemplated for carrying out the invention.

[0013] In the drawings:

[0014] FIG. 1 is a perspective view of a dual fuel generator coupled to a fuel delivery system, according to an embodiment of the invention.

[0015] FIG. 2 is a detail view of a portion of the generator of FIG. 1 about a mechanical fuel lockout switch with the switch in a first position, according to an embodiment of the invention.

[0016] FIG. 3 is a detail view similar to FIG. 2 and showing the mechanical fuel lockout switch in a second position, with an LPG supply line connected thereto, according to an embodiment of the invention.

[0017] FIG. 4A is a schematic diagram of a fuel system for the dual fuel generator of FIG. 1 showing a liquid fuel source in communication with a carburetor of the generator consistent with the first position of the switch as shown in FIG. 2, according to an electro-mechanical embodiment of the invention.

[0018] FIG. 4B is a schematic diagram of the fuel system of FIG. 4A showing a gaseous fuel source in communication with a carburetor of the generator of FIG. 1 consistent with the second position of the switch as shown in FIG. 3, according to an electro-mechanical embodiment of the invention.

[0019] FIG. 5 is a perspective view of a dual fuel carburetor having a manual fuel shutoff system and coupled to a first fuel line and a second fuel line, according to a mechanical embodiment of the invention.

[0020] FIG. 6 is cross-sectional view of the carburetor of FIG. 5 taken along line 6-6 of FIG. 5 through a fuel passage that provides fuel from a float bowl to a throat of the carburetor, according to an embodiment of the invention.

[0021] FIG. 7A is a partial sectional view of the float bowl of FIG. 6 with a manual fuel shutoff system in an open position, according to an embodiment of the invention.

[0022] FIG. 7B is a detailed partial sectional view of the float bowl with a manual fuel shutoff of FIG. 7A taken along line 7B-7B of FIG. 7A, according to an embodiment of the invention.

[0023] FIG. 8 is a partial sectional view similar to FIG. 7A and showing the manual fuel shutoff system in a closed position, according to an embodiment of the invention.

[0024] FIG. 9 is a perspective view of a shaft for the manual fuel shutoff system of FIG. 5, according to an embodiment of the invention.

[0025] FIG. 10 is a side view of a valve member for the manual fuel shutoff system of FIG. 5, according to an embodiment of the invention.

[0026] FIG. 11 is a perspective view of the carburetor of FIG. 5 with the manual fuel shutoff system exploded from a float bowl of the carburetor.

[0027] FIG. 12 is a flow chart showing steps in fabricating a manual fuel shutoff system for a carburetor, according to an embodiment of the invention.

[0028] FIG. 13 is a magnetic fuel shutoff system for a carburetor, according to a magnetic-mechanical embodiment of the invention.

[0029] FIG. 14 is a wiring diagram of a microcontroller receiving input signals and operating engine components, according to an embodiment of the invention.

DETAILED DESCRIPTION OF THE PREFERRED EMBODIMENT

[0030] The operating environment of the invention is described with respect to a dual fuel generator. However, it will be appreciated by those skilled in the art that the invention is equally applicable for use with any dual fuel internal combustion engine. Moreover, the invention will be described with respect to a dual fuel generator configured to operate on a liquid fuel and a gaseous fuel. However, one skilled in the art will further appreciate that the invention is equally applicable for use with other fuel combinations for dual fuel generators and internal combustion engines.

[0031] Referring to FIG. 1, a dual fuel generator 20 is coupled to a fuel delivery system 22, in accordance with an embodiment of the invention. Dual fuel generator 20 includes an internal combustion engine (not shown) within housing 21 at one end 24, operatively connected to an alternator also enclosed in housing 21 at another end 26, by conventional means. Dual fuel generator 20 is configured to operate on different fuels via either a first fuel source 28 or a second fuel source 30. In an exemplary embodiment of the invention, first fuel source 28 is a liquid fuel and second fuel source 30 is a gaseous fuel. The liquid fuel may be gasoline and the gaseous fuel may be liquid petroleum gas (LPG). Each can selectively operate the generator as desired and controlled by an operator. For instance, generator 20 may operate on gasoline for a first period of operation and then switch to LPG for a second period of operation. However, it is contemplated that dual fuel generator 20 is configured to operate on fuels other than gasoline and LPG (e.g., natural gas, biodiesel, etc.), and thus the scope of the invention is not meant to be limited strictly to a dual fuel arrangement where first fuel source 28 provides gasoline and second fuel source 30 provides LPG.

[0032] In one embodiment of the invention, dual fuel generator 20 includes a gasoline tank 32 or, generally, a liquid fuel tank, located inside cover 21 onboard generator 20 to provide gasoline to the engine as first fuel source 28. Gasoline tank 32 connects to a first fuel line to provide gasoline to the carburetor to run the engine, as will later be described with reference to FIG. 4A and 4B. Generator 20 is also coupled to a pressurized fuel container 34, or a pressurized fuel source, located off board

generator 20 to provide LPG to the engine as second fuel source 30. Pressurized fuel container 34 is coupled to generator 20 with an LPG supply hose 36. LPG supply hose 36 is coupled to a second fuel line within generator 20 to provide LPG to the carburetor to run the engine. Dual fuel generator 20 includes a mechanical fuel lockout switch 38 for selecting a desired fuel to be provided to the engine. The mechanical fuel lockout switch 38 is actuated to select first fuel source 28 when in a first position, as shown in FIG. 2, and alternately to select second fuel source 30 when in a second position, as shown in FIG. 3.

[0033] Referring back to FIG. 1, in an exemplary embodiment, fuel 30 from pressurized fuel container 34 is regulated using a fuel regulator system 39 for delivery to the engine. Fuel regulator system 39 includes one or more pressure regulators that reduce and control the pressure of the fuel from pressurized fuel container 34 and delivers fuel at a desired pressure for operation of the engine. Fuel regulator system 39 has an inlet 41 operatively coupled to a service valve 40 of pressurized fuel container 34 and an outlet 43 coupled to LPG supply hose 36. Fuel regulator system 39 includes a primary pressure regulator 42 coupled to pressurized fuel container 34 and a secondary pressure regulator 44. Primary pressure regulator 42 protects downstream components from high pressure of pressurized fuel container 34. Primary pressure regulator 42 receives LPG through service valve 40 of pressurized fuel container 34 and reduces the pressure of the LPG to a first stage. In one embodiment of the invention, the first stage may be delivered directly to generator 20 at a pressure required for operation of the engine.

[0034] In an exemplary embodiment of the invention, fuel regulator system 39 includes secondary pressure regulator 44 coupled to the outlet of primary pressure regulator 42 in order to use standard "off-the-shelf" components. Typically, the primary pressure regulator is mounted on the LPG tank, while the secondary pressure regulator is mounted on the component using the fuel, such as an engine or grill. Here, since generator 20 can be used as a gasoline only generator, secondary pressure regulator 44 is mounted off-board the generator to reduce size and cost of the generator. Secondary pressure regulator 44 receives LPG from primary pressure regulator 42 and further

reduces the pressure of LPG to a second stage to be delivered to generator 20. In a system with two regulators, primary pressure regulator 42 regulates fuel received from pressurized fuel container 34 and reduces the pressure of the fuel to a level required for operation of secondary pressure regulator 44. Secondary pressure regulator 44 regulates fuel received from primary pressure regulator 42 and further reduces the pressure of the fuel to a level required for operation of generator 20. In addition, primary pressure regulator 42 may compensate for varying tank pressure as fuel is depleted while secondary pressure regulator 44 may compensate for varying demand from generator 20.

[0035] In accordance with an exemplary embodiment of the invention, fuel regulator system 39 includes both the primary and secondary regulators, or a custom single regulator, but in any case is located remotely, or off-board, from dual fuel generator 20. Fuel regulator system 39 may be directly mounted to pressurized fuel container 34 using a regulator mounting bracket 46. Regulator mounting bracket 46 has mounting locations for primary pressure regulator 42 and secondary pressure regulator 44. Regulator mounting bracket 46 also has a securing mechanism 48 to secure regulator mounting bracket 46 to pressurized fuel container 34.

[0036] In another embodiment of the invention, primary pressure regulator 42 is mounted on regulator mounting bracket 46 while secondary pressure regulator 44 could be mounted on or near generator 20. In yet another embodiment of the invention, a dual stage regulator may regulate the fuel received from pressurized fuel container 34 and deliver fuel at a pressure required for operation of generator 20. Such a dual stage regulator may regulate the fuel to the second stage within a single structure. The dual stage regulator may be mounted directly on fuel container 34.

[0037] Referring to FIG. 2, a detail view of a portion of generator 20 of FIG. 1 depicts mechanical fuel lockout switch 38 in a first position 38(a), in accordance with an embodiment of the invention. In this position, mechanical fuel lockout switch 38 provides gasoline flow from gasoline tank 32 to the engine while preventing connection of an LPG supply line to fuel inlet 59 of the second fuel line, as will later be discussed

in detail with reference to FIGS. 4A and 4B. Still referring to FIG. 2, mechanical fuel lockout switch 38 provides a combination liquid fuel shutoff valve and a gaseous fuel supply lockout that prevents simultaneous delivery of fuel to the engine from gasoline tank 32 and pressurized fuel container 34, FIG. 1. As such, mechanical fuel lockout switch 38 provides a fuel selector to ensure only the selected fuel is provided to dual fuel generator 20.

[0038] Mechanical fuel lockout switch 38, FIG. 2, includes mechanical fuel valve 54 actuateable between first position 38(a) as shown in FIG. 2 and second position 38(b) as shown in FIG. 3 to selectively control fuel flow to the dual fuel engine from first fuel source 28 through a first fuel line and second fuel source 30 through a second fuel line 36. Mechanical fuel lockout switch 38 may also include fuel lockout apparatus 58 coupled to mechanical fuel valve 54 to communicate fuel sources individually to generator 20. In one embodiment of the invention, fuel lockout apparatus 58 communicates first fuel source 28 to the engine by actuating mechanical fuel valve 54 to first position 38(a) to open the first fuel line as shown in FIG. 2, and communicates second fuel source 30 to the engine by actuating mechanical fuel valve 54 to second position 38(b) to open communication of the second fuel source 30 to the engine as shown in FIG. 3. Referring back to FIG. 2, when mechanical fuel valve 54 is in first position 38(a), fuel lockout apparatus 58 communicates first fuel source 28 to the dual fuel engine and prevents communication between the second fuel source and the dual fuel engine.

[0039] In an exemplary embodiment of the invention, mechanical fuel valve 54 controls the flow of LPG to the engine by actuating fuel lockout apparatus 58 to block or unblock fuel inlet 59 for the second fuel source. Mechanical fuel valve 54 is coupled to the first fuel line as a liquid fuel valve, as shown in FIGS. 4A and 4B, and therefore can control the flow of gasoline to the engine by opening and closing the first fuel line. When the mechanical fuel valve 54, FIG. 2, is in the first position 38(a), gasoline flows from the gasoline tank to the engine and the fuel lockout apparatus 58 blocks the fuel inlet 59. Accordingly, fuel lockout apparatus 58 prevents LPG flow to generator 20

when the mechanical fuel valve 54 is in first position 38(a) wherein the engine is operated on gasoline.

[0040] Mechanical fuel valve 54 includes a fuel valve handle 56 to control the opening and closing of the valve. Fuel valve handle 56 is movable between first position 38(a) as shown in FIG. 2 and second position 38(b) as shown in FIG. 3. Mechanical fuel valve 54 opens the first fuel line (to enable liquid fuel flow to the engine) when fuel valve handle 56 is in the first position, and mechanical fuel valve 54 closes the first fuel line (to prevent liquid fuel flow to the engine) when fuel valve handle 56 is in the second position. Thus, when fuel valve handle 56 is in first position 38(a) as shown in FIG. 2, mechanical fuel valve 54 opens the first fuel line and allows gasoline from gasoline tank 32 to flow to the engine.

[0041] Fuel valve handle 56 is coupled to fuel lockout apparatus 58. Fuel valve handle 56 actuates with fuel lockout apparatus 58 to prevent LPG flow to generator 20 when gasoline flow to the generator is enabled. Fuel lockout apparatus 58 is controlled by fuel valve handle 56 so that moving fuel valve handle 56 to the first position causes fuel lockout apparatus 58 to block fuel inlet 59 for LPG, and moving fuel valve handle 56 to the second position causes fuel lockout apparatus 58 to unblock fuel inlet 59 for LPG.

[0042] In an exemplary embodiment of the invention, fuel valve handle 56 rotates between the first position and the second position and fuel lockout apparatus 58 is rigidly coupled to the rotating handle. Fuel lockout apparatus 58 may include a fuel inlet cover 61, which may be a flange, coupled to fuel valve handle 56 so that fuel inlet cover 61 rotates with the handle. Fuel inlet cover 61 extends radially outward from fuel valve handle 56 and sweeps over fuel inlet 59 for LPG as fuel valve handle 56 rotates. That is, fuel inlet cover 61 rotates transversely across fuel inlet 59 and blocks access thereto. Accordingly, fuel inlet cover 61 prevents LPG flow to generator 20 when fuel valve handle 56 is in first position 38(a) to allow gasoline to run the engine.

[0043] Referring to FIG. 3, a detail view of a portion of generator 20 of FIG. 1 depicts mechanical fuel lockout switch 38 in a second position 38(b), in accordance

with an embodiment of the invention. In this position, mechanical fuel lockout switch 38 provides a disconnect to stop gasoline flow from gasoline tank 32 to the engine while allowing connection of LPG supply hose 36 to fuel inlet 59 of the second fuel line. FIG. 3 further shows LPG supply hose 36 coupling second fuel source 30 to generator 20 to deliver LPG to run the generator.

[0044] Mechanical fuel lockout switch 38 includes mechanical fuel valve 54 coupled to fuel lockout apparatus 58 to prevent gasoline flow to generator 20 when LPG from the LPG supply hose 36 is supplied to the engine. In one embodiment of the invention, actuation of mechanical fuel valve 54 to second position 38(b) causes fuel lockout apparatus 58 to allow communication of second fuel source 30 to the dual fuel engine, and interrupts the first fuel source 28 communication with the dual fuel engine. The position of fuel lockout apparatus 58 prevents the fuel valve handle 56 from moving to first position 38(a) (FIG. 2) while LPG supply hose 36 is connected to generator 20.

[0045] A quick-disconnect hose coupling 50, also referred to as a quick-connect hose coupling, connects LPG supply hose 36 to generator 20 so that LPG supply hose 36 may be quickly attached and detached from generator 20. Hose coupling 50 has a first end 50a mounted on the external surface of generator 20 and coupled to supply the second fuel to the engine. Hose coupling 50 has a second end 50b coupled to the outlet of LPG supply hose 36. Each end 50a, 50b has a gaseous fuel valve that opens when the couplings are engaged and closes when the couplings are disengaged. As such, quick-disconnect hose coupling 50 automatically opens when connected to enable fuel flow from LPG supply hose 36 to the engine. Hose coupling 50 automatically disconnects fluid communication when disconnected. Accordingly, when the supply hose is detached from generator 20, the coupling 50 is automaticlaly closed so that fuel does not escape and unwanted air does not enter the fuel system.

[0046] In one embodiment, fuel inlet cover 61 is coupled to fuel valve handle 56 so that it is spaced apart from the surface of generator 20 to provide clearance for first end 50a of the quick-disconnect hose coupling 50 that protrudes from the surface of generator 20. As shown in FIG. 2, fuel inlet cover 61 blocks off first end 50a of the

quick-disconnect hose coupling when fuel valve handle 56 is rotated to first position 38(a) to enable gasoline flow so that fuel inlet cover 61 prevents connection of LPG supply hose 36 (FIG. 3) to generator 20. As shown in FIG. 3, fuel inlet cover 61 uncovers first end 50a of the quick-disconnect hose coupling 50 when fuel valve handle 56 is rotated to second position 38(b) to disable gasoline flow so that fuel inlet cover 61 permits connection of LPG supply hose 36 to generator 20.

[0047] To operate generator 20 on LPG, fuel valve handle 56 is turned to second position 38(b) to disable the flow of gasoline to the engine and to expose first end 50a of hose coupling 50 on generator 20. LPG supply hose 36 is then connected to generator 20 via hose coupling 50 to enable the flow of LPG to the engine. To operate generator 20 on gasoline, LPG supply hose 36 is disconnected from generator 20 via hose coupling 50 to disable the flow of LPG to the engine and to unblock fuel valve handle 56 from rotating to the first position. As shown in FIG. 2, fuel valve handle 56 is then turned to first position 38(a) to enable the flow of gasoline to generator 20.

[0048] Referring to FIG. 4A, a schematic diagram of a fuel system for a dual fuel engine 60 shows mechanical fuel lockout switch 38 in first position 38(a) to provide communication between the first fuel source 28 and dual fuel carburetor 62, according to an embodiment of the invention. Mechanical fuel lockout switch 38 prevents communication between second fuel source 30 and dual fuel carburetor 62 when the switch is in first position 38(a). In one embodiment of the invention, first fuel source 28 includes a gasoline tank 32 to provide gasoline to carburetor 62 through a first fuel line 66, and second fuel source 30 can include a propane or LPG tank 68 to provide propane or LPG to carburetor 62 through a second fuel line 70. Accordingly, first fuel line 66 may be a liquid fuel line and second fuel line 70 may be a gaseous fuel line.

[0049] Mechanical fuel lockout switch 38 changes the fuel source for engine 60 between liquid fuel and gaseous fuel. Mechanical fuel lockout switch 38 includes a mechanical fuel valve 54 actuateable between first position 38(a) as shown in FIG. 4A and second position 38(b) as shown in FIG. 4B to selectively control fuel flow to the dual fuel engine 60 from first fuel source 28 through first fuel line 66 and second fuel

source 30 through second fuel line 70. Referring back to FIG. 4A, mechanical fuel valve 54 selectively controls fuel flow through first fuel line 66 by opening the line when the mechanical fuel lockout switch 38 actuates to first position 38(a). Mechanical fuel valve 54 may be coupled to fuel lockout apparatus 58 that actuates with mechanical fuel valve 54 to block and unblock fuel inlet 59 of second fuel line 70. First end 50a of the quick-disconnect hose coupling is located at fuel inlet 59 and a mating end 50b of the quick-disconnect hose coupling is coupled to the propane or LPG tank 68. Actuation of mechanical fuel valve 54 to first position 38(a) causes fuel lockout apparatus 58 to block fuel inlet 59 to prevent coupling the first end 50a and second end 50b of the quick-disconnect hose coupling together, and actuation of mechanical fuel valve 54 to another position causes fuel lockout apparatus 58 to unblock fuel inlet 59 to permit attaching first end 50a and second end 50b together.

[0050] A liquid fuel cut-off 72 couples to carburetor 62 to regulate liquid fuel flow through the carburetor. Liquid fuel cut-off 72 can stop liquid fuel flow to engine 60 to prevent an overly rich air-fuel ratio when operating engine 60 on gaseous fuel. Liquid fuel cut-off 72 may attach to carburetor 62 to interrupt liquid fuel upon actuation of mechanical fuel lockout switch 38 from liquid fuel to gaseous fuel. As such, liquid fuel cut-off 72 can prevent engine flooding by stopping liquid fuel flow when starting on gaseous fuel. Liquid fuel cut-off 72 is manually operated in some embodiments of the invention and electrically operated in other embodiments of the invention.

[0051] In one embodiment of the invention, liquid fuel cut-off 72 comprises a fuel cut solenoid 74, also referred to as a carburetor cutoff solenoid, that operates within carburetor 62 as a solenoid valve to control liquid fuel flow to engine 60. Fuel cut solenoid 74 actuates between an open position to provide liquid fuel to engine 60 and a closed position to stop liquid fuel to the engine. Fuel cut solenoid 74 can operate as a normally open solenoid valve so that power is not required to open the solenoid during liquid fuel operation. As such, fuel cut solenoid 74 is powered and moved to a closed position to stop liquid fuel flow to engine 60 during gaseous fuel operation. Alternatively, fuel cut solenoid 74 may be operated as a normally closed valve that is powered to open for liquid fuel operation.

[0052] Fuel cut solenoid 74 is preferably powered by a magneto 76, alternator, engine flywheel with a charge winding, or other electrical power generator having a charge winding or coil 78. Charging coil 78 allows operation of fuel cut solenoid 74 in a batteryless engine. In a batteryless dual fuel generator, the charging coil 78 may be integral to an alternator driven by the batteryless engine. Engine 60 may be a pull-start engine having a recoil starter 80. During engine startup, recoil starter 80 cranks the engine with a manual pull by a user that causes magneto 76 to supply electrical power to fuel cut solenoid 74. While a fuel cut solenoid 74 in a normally open mode does not require any initial electrical power for starting engine 60 on liquid fuel, charging coil 78 powers the solenoid to stop liquid fuel flow during startup on gaseous fuel. Alternatively, charging coil 78 can power a fuel cut solenoid 74 operating in a normally closed mode to open and provide liquid fuel to engine 60 during startup on liquid fuel.

[0053] Charging coil 78 has an output voltage generally proportional to engine speed and therefore charge coil 78 will produce a range of voltages over the range of engine operating speeds. For example, if charging coil 78 produces 12 VAC at 3600 rpm, it may only produce 1 VAC at 300 rpm which would be insufficient voltage during startup to power a solenoid that requires 12 volts. An alternator typically used to power 12 volt accessories, such as a battery, at engine speeds will need increased output voltage to provide sufficient voltage for operation of fuel cut solenoid 74 at low recoil start speeds. In addition, the output voltage of a charging coil may vary if the alternator or magneto 76 also powers accessories. Accordingly, the output voltage of a charging coil should be verified by running engine 60 through the full range of operating speeds before increasing the output voltage.

[0054] Additional turns can be added to a charging coil in the alternator or magneto 76 to increase the output voltage and provide sufficient voltage to activate fuel cut solenoid 74 at manual start speeds. Typical alternators or magnetos may have limited room within stator laminations for additional turns, but low current requirements of fuel cut solenoid 74 allows substitution of smaller gage wire. Alternatively, solenoid windings on fuel cut solenoid 74 can be modified to operate at lower voltages for recoil

starting. However, adding coil turns to a charge winding provides an inexpensive modification and allows use of standard 12 volt solenoids.

[0055] To protect electrical systems, a voltage regulator 82 couples to charging coil 78 to provide a fixed output voltage for a varying input voltage. If charge winding 78 is wound to supply 12 VAC at 300 rpm, it could supply 144 VAC at 3600 rpm. Applying 144 volts could quickly destroy a solenoid designed to operate at 12 volts. Accordingly, voltage regulator 82 may comprise a switching power supply circuit 84 that regulates a rectified DC power output from magneto 76 and provides a fixed voltage to fuel cut solenoid 74. Switching circuits are very efficient, dissipate very little power, and can be made small and inexpensive. Switching power supply circuit 84 allows for low rpm, recoil starter electrical power generation with charge coil 78 voltage control over engine speed range.

[0056] In the embodiment shown in FIGS. 4A and 4B, fuel cut solenoid 74 is operated by an electro-mechanical switch 86. Electro-mechanical switch 86 connects one fuel source to carburetor 62 and is connected to magneto 76 for a power source. Electro-mechanical switch 86 may comprise an electrical switch 88 that provides electrical connection between fuel cut solenoid 74 and magneto 76. Electro-mechanical switch 86 may also comprise mechanical fuel lockout switch 38, and electrical switch 88 can be mechanically actuated and controlled by mechanical fuel lockout switch 38. Fuel cut solenoid 74 connects to open and close a fuel path to pull-start engine 60 in response to reception of electrical power from electro-mechanical switch 86.

[0057] Fuel cut solenoid 74 can operate as a normally open valve that closes when powered by alternator or magneto 76. The normally open valve is activated to close and prevent gasoline flow to engine 60 for LPG mode, and deactivated to open and allow gasoline flow to engine 60 for gasoline mode. As such, actuation of mechanical fuel lockout switch 38 to first position 38(a) opens electrical switch 88 to interrupt power and open fuel cut solenoid 74 as represented in FIG. 4A, and actuation of mechanical fuel lockout switch 38 to second position 38(b) closes electrical switch 88 to power and close fuel cut solenoid 74 as represented in FIG. 4B. Alternatively, fuel cut solenoid 74

can operate as a normally closed valve where actuation of mechanical fuel lockout switch 38 to first position 38(a) closes electrical switch 88 to power and open fuel cut solenoid 74, and actuation of mechanical fuel lockout switch 38 to second position 38(b) opens electrical switch 88 to interrupt power and close fuel cut solenoid 74.

[0058] In an alternative embodiment of the invention, a microcontroller 89 operates fuel cut solenoid 74 so that fuel cut solenoid 74 opens to operate engine 60 on gasoline and is closed when the engine operates on LPG. While engine 60 is running, charging coil 78 provides power available to microcontroller 89 for operation of fuel cut solenoid 74. Fuel cut solenoid 74 may operate in a normally open mode to allow gasoline flow to engine 60 without power from microcontroller 89, and microcontroller 89 may operate fuel cut solenoid 74 to operate as an after-fire solenoid when shutting down engine 60 from gasoline operation. That is, microcontroller 89 powers fuel cut solenoid 74 to a closed position preventing fuel being drawn into engine 60 and muffler during engine shutdown from operation on gasoline. When engine 60 runs on LPG, microcontroller 89 switches on power to close fuel cut solenoid 74 to prevent engine 60 from drawing in gasoline from the float bowl of carburetor 62 and first fuel line 66. Microcontroller 89 may also operate fuel cut solenoid 74 configured to be normally closed. Implementation of microcontroller 89 is further described with respect to FIG. 14.

[0059] Referring to FIG. 4B, a schematic diagram of a fuel system for a dual fuel engine shows mechanical fuel lockout switch 38 in second position 38(b) to provide communication between second fuel source 30 and dual fuel carburetor 62, according to an embodiment of the invention. Mechanical fuel lockout switch 38 prevents communication between first fuel source 28 and dual fuel carburetor 62 when the switch is in second position 38(b). The dual fuel engine has a first fuel line 66 to provide fuel from first fuel source 28 to carburetor 62 and a second fuel line 70 to provide fuel from second fuel source 30 to carburetor 62.

[0060] Mechanical fuel lockout switch 38 includes mechanical fuel valve 54 that selectively controls fuel flow through first fuel line 66 by closing the line when

mechanical fuel lockout switch 38 actuates to second position 38(b). Mechanical fuel lockout switch 38 may also include a mechanical lockout apparatus 58 to block and unblock fuel inlet 59 of the second fuel line 70. Fuel inlet 59 may include first end 50a of the quick-connect hose coupling mounted on the generator and coupled to second fuel line 70. Second end 50b of the quick-connect hose coupling is coupled to the outlet of second fuel source 30, and the first end 50a mates with second end 50b to quickly attach propane or LPG tank 68 to second fuel line 70. Fuel lockout apparatus 58 may also hold mechanical fuel lockout switch 38 in second position 38(b) when the propane or LPG tank 68 is coupled to the engine via the ends 50a, 50b of the quick-connect hose coupling.

[0061] Liquid fuel cut-off 72 couples to carburetor 62 to regulate liquid fuel flow through the carburetor as described with respect to FIG. 4A. Liquid fuel cut-off 72 may comprise a fuel cut solenoid 74 powered by magneto 76. Engine 60 has recoil starter 80 that cranks the engine and drives magneto 76 to power fuel cut solenoid 74 when starting the engine. Voltage regulator 82 reduces the voltage delivered to fuel cut solenoid 74 at higher engine operating speeds. Fuel cut solenoid 74 is activated by electro-mechanical switch 86 providing electrical connection to magneto 76 via electrical switch 88. Electrical switch 88 can be manually actuated and controlled by mechanical fuel lockout switch 38. FIG. 4B shows electrical switch 88 closed to power a normally open configured fuel cut solenoid 74 to a closed position for LPG mode when mechanical fuel lockout switch 38 is in second position 38(b).

[0062] FIG. 4A and FIG. 4B depict an embodiment where mechanical fuel valve 54 operates along first fuel line 66 to provide a flow path for first fuel source 28 to carburetor 62 when the valve is in first position 38(a). That is, mechanical fuel valve 54 may control a single fuel line that runs through the valve while operating fuel lockout apparatus 58 to control fuel flow through second fuel line 70. Embodiments of the invention also contemplate mechanical fuel valve 54 configured to operate along second fuel line 70 to provide a flow path for second fuel source 30 to carburetor 62 when the valve is in second position 38(b). Mechanical fuel valve 54 may be configured to control multiple fuel lines that run through the valve according to embodiments of the

invention. In another embodiment of the invention, a manual fuel petcock is coupled along second fuel line 70 to provide an independent shut-off from second fuel source 30 to the engine.

[0063] Referring to FIG. 5, a dual fuel carburetor having a manual fuel shutoff system is shown, in accordance with a mechanical embodiment of the invention. Carburetor 62 attaches to an intake 90 of the engine to mix air and fuel and connect to a liquid fuel source and a gaseous fuel source. Carburetor 62 has a mixing passage or throat 92 having an inlet 94 for air and an outlet 96 for an air-fuel mixture. A venturi 98 is located in throat 92 with a choke valve 100 located upstream from the venturi and a throttle valve 102 located downstream from the venturi. Carburetor 62 has a float bowl 104 that provides fuel through a fuel passage into a narrow portion of venturi 98. Float bowl 104 has a liquid fuel inlet 106 to receive liquid fuel from first fuel source 28. Throat 92 has a gaseous fuel inlet 108 to receive gaseous fuel from second fuel source 30. Dual fuel carburetor 62 mixes air with fuel from first fuel source 28 and second fuel source 30 and provides the respective air-fuel mixtures for operation of the dual fuel generator.

[0064] Liquid fuel cut-off 72 couples to carburetor 62 to control liquid fuel flow downstream of float bowl 104 in the carburetor. Liquid fuel cut-off 72 can close off float bowl 104 to stop liquid fuel flow to the engine and prevent an overly rich air-fuel ratio during gaseous fuel operation. As such, liquid fuel cut-off 72 prevents engine flooding when starting on gaseous fuel. Liquid fuel cut-off 72 also traps fuel in float bowl 104 to eliminate delay in filling the bowl when starting the engine on liquid fuel, and can stop liquid fuel flow to the engine immediately after ignition shutdown. As such, liquid fuel cut-off 72 reduces emissions and prevents afterfire by stopping the engine from continuing to draw in fuel from float bowl 104 during shutdown.

[0065] In the embodiment of FIG. 5, liquid fuel cut-off 72 comprises a manually operated fuel shutoff 110 coupled to carburetor 62 to control liquid fuel flow downstream of float bowl 104. Manual fuel shutoff 110 can be cable actuated for use on engines without battery power, for instance engines with recoil starters. Manual fuel

shutoff 110 actuates between a first position to allow gasoline flow to the engine, as shown in FIG. 7A, and a second position to prevent gasoline flow to the engine, as shown in FIG. 8. Referring back to FIG. 5, manual fuel shutoff 110 may comprise a shaft 112 extending into carburetor 62 that actuates between the first position and second position. A manually operated control system 114 couples to shaft 112 external to carburetor 62 to control manual fuel shutoff 110.

[0066] A bracket 116 couples to the outer surface of carburetor 62 to support manual control system 114. Bracket 116 mounts to a boss 118 extending outwards from float bowl 104. Boss 118 has a flat vertical surface with a pair of tapped holes for mounting bracket 116 to float bowl 104. Screws 120, 122 extend through respective holes in bracket 116 and into the tapped holes to mount the bracket to carburetor 62. Manual fuel shutoff 110 extends out of carburetor 62 and through an opening 124 in bracket 116. Bracket 116 has a first stopping tab 126 and a second stopping tab 128 extending away from float bowl 104 to hold manual fuel shutoff 110 in a respective open or closed position. A fuel drain screw 130 extends into an opening in carburetor 62 adjacent bracket 116.

[0067] Bracket 116 has a lower arm 132 extending downward and to the air inlet side of carburetor 62. Lower arm 132 has a bottom portion 134 bent outward from carburetor 62 to couple to a control system spring 136. Bottom portion 134 has a hole 138 for control system spring 136 adjacent a positioning groove 140 for the spring. Control system spring 136 is held in position by groove 140 as it hooks through hole 138. Bracket 116 also has an upper arm 142 extending first outward from carburetor 62 and then vertically and to the outlet side of the carburetor. Upper arm 142 has a cable clamp 144 for holding a Bowden cable 146. Cable clamp 144 has a flat midsection and two curved ends contacting bracket 116 to hold the midsection slightly apart from the bracket. Cable clamp 144 is coupled to bracket 116 by a bolt 148 extending through a hole in the midsection and through upper arm 142 of the bracket.

[0068] A lever 150 couples to shaft 112 to actuate manual fuel shutoff 110. A cap 152 holds lever 150 on shaft 112. Alternatively, lever 150 may be coupled to the shaft

112 by welding or staking. Lever 150 has a first lever arm 154 to contact and hold lever 150 against first and second stopping tabs 126, 128 of the bracket. Lever 150 has a second lever arm 156 to actuate shaft 112. First lever arm 154 is in plane with an opening in the lever for shaft 112 and second lever arm 156 extends first outward from carburetor 62 and then parallel to first lever arm 154. Second lever arm 156 extends outward from carburetor 62 to provide clearance between bracket 116 and the second lever arm for control system spring 136 and screw 122. Second lever arm 156 has two holes 158, 160 for coupling control system spring 136 and Bowden cable 146 to lever 150.

[0069] Manual fuel shutoff 110 operates as a valve within carburetor 62 to selectively interrupt liquid fuel flow to the engine. Control system spring 136 preferably pulls on lever 150 to hold manual fuel shutoff 110 in an open valve position, and Bowden cable 146 pulls lever 150 against control system spring 136 to rotate manual fuel shutoff 110 to a closed valve position. As such, control system spring 136 holds manual fuel shutoff 110 open for gasoline mode until Bowden cable 146 is pulled to close the valve for LPG mode. Alternatively, control system spring 136 can hold manual fuel shutoff 110 in a closed valve position until Bowden cable 146 is pulled to open the valve. Therefore, actuation of the Bowden cable 146 acts as a switch to assist in changeover between the dual fuels. Manual fuel shutoff 110 may rotate 90 degrees between the open and closed positions with stopping tabs 126, 128 positioned about bracket 116 accordingly. Lever 150 can be positioned on shaft 112 so that second lever arm 156 is pulled upward by a generally vertical Bowden cable 146. Second lever arm 156 may actuate between a position 45 degrees below horizontal for an open valve and a position 45 degrees above horizontal for a closed valve. When holding the valve open, control system spring 136 may be oriented at a right angle to second lever arm 156 for increased leverage.

[0070] Referring to FIG. 6, a cross-sectional view of the carburetor taken generally about line 6-6 of FIG. 5 is shown, in accordance with an embodiment of the invention. Carburetor 62 includes a throat 92 to mix gaseous fuel with air and liquid fuel with air. Throat 92 includes a gaseous fuel inlet port 162 in communication with gaseous fuel

inlet 108 coupled to a second fuel line 70. Carburetor 62 also includes float bowl 104 and a fuel passage 164 to provide a liquid fuel path from float bowl 104 through a main nozzle 166 into venturi 98. Float bowl 104 has a liquid fuel inlet port 168 and a float valve 170 to regulate liquid fuel flow through liquid fuel inlet port 168. Liquid fuel inlet port 168 is in communication with the liquid fuel inlet 106 coupled to first fuel line 66.

[0071] Manual fuel shutoff 110 couples to carburetor 62 to regulate liquid fuel flow downstream of float bowl 104. Manual fuel shutoff 110 attaches to carburetor 62 to close fuel passage 164 upon selection of engine operation to gaseous fuel. Manual fuel shutoff 110 may have a first end 172 positioned in carburetor 62 adjacent an inlet port 174 to fuel passage 164, and the first end 172 actuates to close fuel passage 164. That is, first end 172 actuates between a first position to permit fuel flow into fuel passage 164, as shown in FIG. 7A, and a second position to prevent fuel flow into fuel passage 164, as shown in FIG. 8.

[0072] Referring back to FIG. 6, manual fuel shutoff 110 has a second end 176 positioned external to carburetor 62 that is manually actuated to operate manual fuel shutoff 110. Manual fuel shutoff 110 may have a rotating shaft 112 that extends through an opening 178 in carburetor 62. A blocking member or valve tip 180 couples to shaft 112 in carburetor 62 to create a valve-shaft assembly 179. Valve tip 180 rotates parallel to inlet 174 of fuel passage 164 between a blocking position and non-blocking position to selectively block fuel flow into fuel passage 164. Lever 150 couples to shaft 112 external to carburetor 62 and actuates to rotate shaft 112 and valve tip 180.

[0073] Shaft 112 may be horizontal or substantially horizontal to allow valve tip 180 to be positioned directly in float bowl 104 adjacent inlet port 174 of fuel passage 164. That is, manual fuel shutoff 110 may be coupled to carburetor 62 such that second end 176 is horizontal from first end 172. Inlet 174 of fuel passage 164 can face horizontal or substantially horizontal to accommodate valve tip 180 in float bowl 104. As such, fuel passage 164 may have a horizontal component that receives fuel from float bowl 104 leading to a vertical component to provide fuel to venturi 98. The interior surface

of the float bowl 104 may also have a recess or cavity 182 to provide room for valve member 180 in the bowl.

[0074] Opening 178 in carburetor 62 has a plug 184 to hold shaft 112 and prevent fuel flow out of the carburetor. Shaft 112 extends through a hole 186 in plug 184 and hole 186 is positioned to align valve tip 180 with fuel passage 164. Plug 184 has a larger outer diameter 188 toward the external side of carburetor 62 and a smaller outer diameter 190 toward the internal side. Larger outer diameter 188 and smaller outer diameter 190 mate with corresponding diameters of opening 178. Plug 184 has a counterbore 192 to hole 186 on the external side of the plug. A compression spring 194 is positioned around shaft 112 in float bowl 104 to push valve tip 180 against plug 184. Compression spring 194 holds valve tip 180 against inlet 174 of fuel passage 164 in order to seal the fuel passage.

[0075] A primary o-ring 196 and a secondary o-ring 198 are positioned around shaft 112 to provide a respective first and second fuel seal between the shaft and plug 184 and to seal first end 172 of manual fuel shutoff 110 in carburetor 62. Primary o-ring 196 may be positioned in an o-ring groove 200 in shaft 112 and secondary o-ring 198 may be positioned in counterbore 192 of plug 184. A bracket 116 or other support member mounts over counterbore 192 and around shaft 112 to hold secondary o-ring 198 in counterbore 192. Bracket 116 has an opening 124 large enough for shaft 112 but small enough to hold secondary o-ring 198 in counterbore 192. Manual fuel shutoff 110 actuates in a rotative motion free from linear motion in part to ensure fuel will not leak through primary o-ring 196 or secondary o-ring 198. Compared to a sliding valve, a rotating valve, such as manual fuel shutoff 110, reduces the likelihood that fuel will leak from carburetor 62.

[0076] Liquid fuel cut-off 72 may regulate fuel flow through multiple fuel passages in carburetor 62 that provide fuel from float bowl 104 to the engine. For instance, carburetor 62 may have a main fuel circuit 202 and an idle fuel circuit 204. Main fuel circuit 202 provides fuel through main nozzle 166 into a narrow portion of venturi 98. Idle fuel circuit 204 provides fuel to throat 92 downstream from the throttle valve.

Liquid fuel cut-off 72 may regulate fuel flow through some or all of the fuel circuits that provide fuel from float bowl 104 to the engine. FIG. 6 shows an embodiment where idle fuel circuit 204 branches off from main fuel circuit 202 and liquid fuel cut-off 72 actuates to block fuel flow into both main fuel circuit 202 and idle fuel circuit 204. In other embodiments, liquid fuel cut-off 72 closes main fuel circuit 202 while small amounts of liquid fuel pass through idle fuel circuit 204. Fuel passing through idle fuel circuit 204 may not negatively affect engine performance during LPG operation but will eventually drain the gasoline tank.

[0077] Referring to FIG. 7A, a partial sectional view of a float bowl shows a manual fuel shutoff system in an open position for gasoline mode, in accordance with an embodiment of the invention. The partial sectional view is taken through a portion of float bowl 104 along fuel passage 164 while showing another portion of float bowl 104 in front of fuel passage 164 and coupled to manual fuel shutoff 110. Inlet 174 to fuel passage 164 is in a boss 206 extending outward from a central region of float bowl 104. Boss 206 has an oval top with sides that extend to the floor of float bowl 104. Inlet 174 to fuel passage 164 extends through boss 206 and has a substantially flat perimeter edge 208 around inlet port 174 on the surface of the boss. Manual fuel shutoff 110 presses against substantially flat perimeter edge 208 surrounding fuel passage 164 to block fuel flow into fuel passage 164.

[0078] Manual fuel shutoff 110 may have a rotating shaft 112 extending through an aperture 178 in float bowl 104. Shaft 112 has a first end 210 coupled to valve tip 180 and located in float bowl 104 that is held against inlet port 174 to fuel passage 164. Shaft 112 rotates valve tip 180 against inlet port 174 between a first position 180(a) allowing fuel flow through the inlet port 174, as shown in FIG. 7A, and a second position 180(b) blocking fuel flow through the inlet port 174, as shown in FIG. 8. That is, valve tip 180 uncovers the inlet 174 of fuel passage 164 to permit fuel flow into the inlet 174 when rotated to first position 180(a), FIG. 7A, and covers inlet 174 of fuel passage 164 to prevent fuel flow into inlet 174 when rotated to second position 180(b), FIG. 8.

[0079] Referring back to FIG. 7A, the manual fuel shutoff system further includes bracket 116 to support shaft 112 in float bowl 104 and provide mounting locations for manually operated control system 114. Bracket 116 also has a pair of stopping tabs 126, 128 to hold the manual fuel shutoff 110 in an open or closed position. Shaft 112 extends through bracket 116 and lever 150 couples to a second end 212 of shaft 112 located outside of float bowl 104. Control system spring 136 couples lever 150 to bracket 116 to hold lever 150 against stopping tab 126 and hold manual fuel shutoff 110 in the open position for gasoline mode. Bowden cable 146 couples to lever 150 to pull against control system spring 136 and rotate manual fuel shutoff 110 to the closed position for LPG mode. As such, second end 176 of manual fuel shutoff 110 is positioned external to float bowl 104 and coupled to manually operated control system 114 to operate manual fuel shutoff 110.

[0080] Referring to FIG. 7B, a detailed partial sectional view of the float bowl of FIG. 7A taken along line 7B-7B shows a manual fuel shutoff in an open position for gasoline mode, in accordance with an embodiment of the invention. Float bowl 104 includes boss 206 through which fuel passage 164 extends and having a substantially flat perimeter edge 208 surrounding inlet 174 to fuel passage 164. Substantially flat perimeter edge 208 preferably has a flat finished surface for improved sealing against valve tip 180. Valve tip 180 maintains planar contact with substantially flat perimeter edge 208 while rotating between an open position permitting fuel flow into inlet 174 and a closed position blocking fuel flow into inlet 174. As such, valve tip 180 rotates parallel to inlet 174 of fuel passage 164 between the open or first position 180(a) and closed or second position 180(b), FIG. 8.

[0081] Referring again to FIG. 7B, valve tip 180 may comprise an oval or stadium 214 having a flat surface 216 that contacts perimeter edge 208 around inlet 174 of fuel passage 164. Valve tip 180 may have a recessed portion or cutout 218 in the flat surface 216 to provide a flow passage through the valve tip. Fuel flows through the cutout 218 into the inlet 174 of fuel passage 164 when cutout 218 is aligned with inlet 174. That is, cutout 218 in valve tip 180 aligns with inlet port 174 when valve tip 180 is rotated to the open position such that fuel can pass from float bowl 104 through cutout 218 into fuel

passage 164. Cutout 218 in valve tip 180 is strategically positioned in a narrow portion of stadium 214 so a long portion of stadium 214 can be rotated to cover and block inlet 174. Valve tip 180 may comprise one of many shapes including a stadium, an oval, a disk, a rectangle, an irregular shape, among others.

[0082] Referring to FIG. 8, a partial sectional view of a float bowl shows a manual fuel shutoff system in a closed position for LPG mode, in accordance with an embodiment of the invention. Valve tip 180 pushes against inlet 174 to fuel passage 164 to seal the inlet when in second position 180(b). Valve tip 180 may have a stadium shape 214 with a cutout 218 in the narrow portion of the stadium to provide a flow passage. Valve tip 180 blocks fuel flow into fuel passage 164 when the cutout 218 in valve tip 180 is rotated away from inlet 174 of fuel passage 164. Cutout 218 may face downward when in the closed position and horizontal when in the open position. Lever 150 couples to shaft 112 outside of float bowl 104 and is actuated by Bowden cable 146 to operate manual fuel shutoff 110.

[0083] Bowden cable 146 may be coupled to mechanical fuel lockout switch 38, FIG. 1, to automatically open and close manual fuel shutoff 110 upon selection of a corresponding fuel source. Mechanical fuel lockout switch 38 may have a lever arm inside of the generator housing for actuating Bowden cable 146, FIG. 8. Alternatively, Bowden cable 146 may have a push-pull knob located on an external surface of the generator housing to independently actuate manual fuel shutoff 110. In either case, manual fuel shutoff 110 can attach to the carburetor to close fuel passage 164 downstream from float bowl 104 upon actuation of the mechanical fuel lockout switch 38, FIG. 1, from liquid fuel to gaseous fuel.

[0084] Referring to FIG. 9, a perspective view of a shaft for the manual fuel shutoff system of FIGS. 5-8 is shown, in accordance with an embodiment of the invention. Shaft 112 has two "D" shaped ends each located at a respective first end 210 and second end 212 of the shaft. Shaft 112 also has a first diameter 220 and a larger second diameter 222 each extending radially from shaft 112 outward beyond the two "D" shaped ends. First diameter 220 and second diameter 222 are separated by o-ring

groove 200 with first diameter 220 toward first end 210 of shaft 112 and second diameter 222 toward second end 212 of shaft 112. First diameter 220 also has a groove 224 for a retaining ring. Lever 150, FIG. 8, has a "D" shaped opening to fit on the second end 212 of shaft 112 and held against the second diameter 222.

[0085] Referring to FIG. 10, a side view of a valve member for the manual fuel shutoff system of FIG. 5-8 is shown, in accordance with an embodiment of the invention. Valve tip 180 has a flat surface 216 to seal and rotate against a mating surface in the carburetor. Valve tip 180 is preferably made from polyoxymethylene (POM) or other thermoplastic material to provide a surface suitable for sealing. Valve tip 180 may be shaped as a stadium 214 with a short direction 226 and a long direction 228 extending from a center of rotation 230. The long direction 228 rotates over inlet 174, FIG. 8, to selectively block fuel passage 164. As such, valve tip 180 may rotate less than 360 degrees between the open and closed positions, and valve tip 180 rotates substantially 90 degrees between the positions in an exemplary embodiment of the invention.

[0086] Referring back to FIG. 10, cutout 218 may be located along a straight side of stadium 214 to create a flow passage through valve tip 180. Cutout 218 may have a depth less than the thickness of stadium 214 or may extend through the thickness of the stadium. Cutout 218 may be a half circle with tangent side components extending perpendicular to a straight edge of stadium 214, through a side of valve tip 180. Cutout 218 may extend into valve tip 180 short of the center of stadium 214 and positioned slightly offset along the length of the stadium from the stadium center.

[0087] Valve tip 180 may have a "D" shaped opening 232 to press onto shaft 112 of FIG. 9, defining center of rotation 230, FIG. 10. Center of rotation 230 may be equal distance from straight edges of stadium 214 and positioned between cutout 218 and a rounded end of the stadium that is the closest rounded end to the cutout. Cutout 218 is askew from center of rotation 230 along the length of stadium 214 in part to cover more distance when rotated away from inlet port 174, FIG. 8. In addition, valve tip 180 is

positioned off center on shaft 112 to increase the length of long direction 228 from center of rotation 230 that is rotated to cover inlet port 174.

[0088] Referring to FIG. 11, a perspective view of the carburetor of FIG. 5 with the manual fuel shutoff system exploded from a float bowl of the carburetor is shown, in accordance with an embodiment of the invention. Carburetor 62 has a throat 92, a float bowl 104, and a fuel passage 164 from float bowl 104 to an outlet port 234 in throat 92. Manual fuel shutoff 110 includes shaft 112 having first end 210 to be positioned in float bowl 104 and a second end 212 to be positioned external to float bowl 104. A primary o-ring 196 installs on shaft 112 and positioned in an o-ring groove 200 in shaft 112. A retaining ring 236 installs on shaft 112 in a groove 224 toward first end 210 from o-ring groove 200. Compression spring 194 installs on shaft 112 followed by valve tip 180 pressed onto first end 210 of shaft 112 creating a valve-shaft assembly 179. Orientation of valve tip 180 is controlled by a "D" shaped hole 232 in valve tip 180 mating with a "D" shaped end of shaft 112.

[0089] Plug 184 installs on shaft 112 pushing compression spring 194 against valve tip 180. Primary o-ring 196 seals between shaft 112 and plug 184. Valve-shaft assembly 179 inserts through opening 178 in float bowl 104 and plug 184 presses into the opening. Plug 184 anchors in opening 178 so that compression spring 194 holds valve tip 180 against fuel passage 164. Secondary o-ring 198 installs around shaft 112 to seal between the shaft and plug 184. Secondary o-ring 198 may be positioned in a counterbore 192 in plug 184. Bracket 116 couples to float bowl 104 and holds secondary o-ring 198 positioned in counterbore 192. Bracket 116 may be 2.0 mm thick and stamped from Q235 grade steel. A pair of screws 120, 122 each having a spring lock washer 238, 240 extend through a respective hole 242, 244 in bracket 116 to mount bracket 116 to carburetor 62. Screws 120, 122 may be M5 screws. A spacer 246 installs on shaft 112 and against bracket 116.

[0090] Lever 150 couples to shaft 112 and held apart from bracket 116 by spacer 246. Shaft 112 has a "D" shape at second end 212 that is inserted into a corresponding "D" shaped opening 248 in lever 150. The orientation of lever 150 is controlled by "D"

shape hole 248 in lever 150 mating with a "D" shape end of shaft 112. Lever 150 may be 1.5 mm thick and stamped from Q235 grade steel. Cap 152 presses onto shaft 112 to hold lever 150 on shaft 112. Control system spring 136 attaches to lever 150 and bracket 116 to hold manual fuel shutoff 110 open. Cable clamp 144 couples to bracket 116 by bolt 148. Cable clamp 144 has a tab 250 at one or both ends that fits into a corresponding slot or recess 252 in bracket 116. Cable clamp 144 also has a midsection with a notch 254 to pinch and hold Bowden cable 146 to bracket 116. Bowden cable 146 is held by cable clamp 144 and attaches to lever 150 to actuate manual fuel shutoff 110 to the closed position. Fuel drain screw 130 and drain screw spring 256 insert into carburetor 62. In one embodiment, drain screw spring 256 is the same type of spring used for compression spring 194.

[0091] Referring to FIG. 12, and with continued reference back to FIG. 11, a method of fabricating a manual fuel shutoff system for a carburetor is shown, in accordance with an embodiment of the invention. Process 300 begins by providing carburetor 62 at STEP 302. Process 300 continues with making a valve-shaft assembly 179 at STEP 304, with valve tip 180 pressed onto shaft 112. Also in STEP 304, a compression spring 194 is stalled on shaft 112 and primary o-ring 196 is installed around shaft 112. Process 300 continues by installing plug 184 on valve-shaft assembly 179 at STEP 306. Next, valve-shaft assembly 179 is inserted through opening 178 in float bowl 104 and plug 184 is pressed into the opening at STEP 308. Process 300 continues at STEP 310 by installing secondary o-ring 198 in a groove on plug 184. Next, bracket 116 is coupled to float bowl 104 of carburetor 62 in STEP 312. Process 300 continues at STEP 314 by installing lever 150 on shaft 112. Next, cap 152 is pressed onto shaft 112 to hold lever 150 to shaft 112 in STEP 316. In STEP 318, control system spring 136 is installed on lever 150 and bracket 116. Also, in STEP 318, Bowden cable 146 is attached to lever 150 to actuate shaft 112.

[0092] Referring to FIG. 13, a magnetic fuel shutoff system for a carburetor is shown, in accordance with an embodiment of the invention. Magnetic fuel shutoff system 320 couples to the carburetor to provide a magnetically actuated liquid fuel cut-off for the internal combustion engine. Magnetic fuel shutoff system 320 controls liquid

fuel flow through a fuel passage leading from the float bowl to the throat in the carburetor. Magnetic fuel shutoff system 320 can be manually actuated between an open position to allow gasoline flow to the engine for gasoline operation and a closed position to prevent gasoline flow to the engine for LPG operation.

[0093] Magnetic fuel shutoff system 320 includes a housing at least partially enclosing the liquid fuel cut-off. That is, magnetic fuel shutoff system 320 has a first section 322 housing magnetic fuel shutoff 324 and a second section 326 housing a manually actuated magnet 328 to operate the magnetic fuel shutoff. First section 322 has a forward wall 330 and a back wall 332 with the forward wall facing internal to the carburetor. Forward wall 330 has a flange 334 around an outer perimeter for coupling to the carburetor. Forward wall 330 also has an opening 336 through which a plunger 342 of the magnetic fuel shutoff 324 extends into the carburetor. A lip 338 extends forward from forward wall 330 around opening 336 and an o-ring 340 is installed around lip 338. Flange 334 may be mounted to a plug in an opening of the carburetor with magnetic fuel shutoff 324 entering the carburetor through a hole in the plug.

[0094] First section 322 provides a sealing member enclosing plunger 342 of magnetic fuel shutoff 324 to the carburetor and holding fuel in the carburetor. The plunger 342 extends through opening 336 in forward wall 330 with a pointed end that is selectively inserted into a fuel supply path in the carburetor to block fuel flow downstream from the float bowl. Magnetic fuel shutoff 324 has a back plate 344 coupled to plunger 342 in first section 322. Plunger 342 extends perpendicular from a forward face of back plate 344. A spring 346 pushes a back face of back plate 344 against back wall 332 to push plunger 342 through opening 336 in forward wall 330 to block the fuel supply path in the carburetor. Accordingly, the first section 322 holds the spring 346 against the plunger 342. Magnetic fuel shutoff 324 is guided through its actuation by back plate 344 sliding through first section 322 and plunger 342 through opening 336 in forward wall 330.

[0095] Second section 326 couples to first section 322 and is located behind back wall 332. Second section 326 encloses an actuating magnet 328 to selectively pull

magnetic fuel shutoff 324 against spring 346. Second section 326 preferably guides actuating magnet 328 along a path perpendicular to that of magnetic fuel shutoff 324. As such, the magnetic force to pull magnetic fuel shutoff 324 to an open valve position is the strongest when actuating magnet 328 is aligned with the path of magnetic fuel shutoff 324. Actuating magnet 328 pulls magnetic fuel shutoff 324 against spring 346 when actuating magnet 328 approaches magnetic fuel shutoff 324 and releases magnetic fuel shutoff 324 while traveling away from magnetic fuel shutoff 324. Actuating magnet 328 may comprise a rare-earth or other permanent magnet.

[0096] In an exemplary embodiment of the invention, magnetic fuel shutoff 324 actuates horizontally between an open position to permit fuel flow into a fuel passage in the carburetor and a closed positioned to prevent fuel flow into the fuel passage. Actuating magnet 328 preferably follows a vertical path and a spring 348 couples to a top of second section 326 pushing downward on actuating magnet 328. Bowden cable 146 couples to the top of second section 326 and to actuating magnet 328 to pull the magnet vertically against spring 348 and operate magnetic fuel shutoff system 320.

[0097] Referring now to FIG. 14, a wiring diagram of a microcontroller 89 receiving input signals and operating engine components is shown, according to an embodiment of the invention. Microcontroller 89 closes fuel cut solenoid 74 when the engine operates on LPG and opens the fuel cut solenoid to operate the engine on gasoline. For LPG mode, microcontroller 89 switches on power to fuel cut solenoid 74 to close the solenoid preventing the engine from drawing in gasoline from the float bowl of the carburetor. During shutdown from gasoline operation, microcontroller 89 can also power fuel cut solenoid 74 to a closed position preventing additional gasoline being drawn into the engine. While microcontroller 89 can operate fuel cut solenoid 74 operating in a normally open configuration, microcontroller 89 can also operate a fuel cut solenoid operating in a normally closed configuration.

[0098] Microcontroller 89 may include a module 350 to connect fuel cut solenoid 74, charging coil 78, switches and a ground terminal. Module 350 has a first connection 352(a) to couple fuel cut solenoid 74 and a second connection 352(b) to couple charging

coil 78 to power the fuel cut solenoid. Fuel cut solenoid 74 may be coupled to a fuel switch 354 and a combination switch 356 that are also connected to module 350 via a third connection 352(c). Fuel switch 354 changes operation of the engine between LPG and gasoline, and combination switch 356 can operate to kill the engine. A ground terminal 358 connects to module 350 via a fourth connection 352(d) in order to ground fuel cut solenoid 74 via fuel switch 354 or combination switch 356.

[0099] In LPG mode, fuel switch 354 connects a first contact 360(a) to a second contact 360(b), instead of third contact 360(c), to complete an electrical circuit for fuel cut solenoid 74 by connecting the fuel cut solenoid to ground terminal 358. A fuel cut solenoid 74 operating in a normally open configuration is therefore powered and closed to prevent gasoline flow from the fuel bowl of the carburetor to the engine. Fuel switch 354 also connects a fourth contact 360(d) to a fifth contact 360(e), instead of sixth contact 360(f), to prevent combination switch 356 from grounding magneto 76 thereby maintaining power to spark plug 362.

[00100] In gasoline mode, fuel switch 354 connects first contact 360(a) to third contact 360(c) to interrupt an electrical circuit for fuel cut solenoid 74 by disconnecting the fuel cut solenoid from ground terminal 358. A fuel cut solenoid 74 operating in a normally open configuration is therefore unpowered and opened to allow gasoline flow from the fuel bowl of the carburetor to the engine. Fuel switch 354 also connects fourth contact 360(d) to sixth contact 360(f) to allow combination switch 356 to ground magneto 76 upon shutdown thereby interrupting power to spark plug 362.

[00101] Combination switch 356 can actuate fuel cut solenoid 74 upon engine shutdown from gasoline operation to prevent after-fire. That is, combination switch 356 connects a first point 364(a) to a second point 364(b) to kill the engine by connecting magneto 76 to ground terminal 358. At the same time, combination switch 356 connects a third point 364(c) to a fourth point 364(d) completing an electrical circuit for fuel cut solenoid 74 by connecting the solenoid to ground terminal 358. Fuel cut solenoid 74 is then powered and closed to prevent continued gasoline flow to the engine after combination switch 356 stops power supply to spark plug 362.

[00102] In one embodiment of the invention, combination switch 356 can operate as a kill switch only for gasoline operation. That is, combination switch 356 can be decoupled from magneto 76 by fuel switch 354 so that combination switch 356 cannot be actuated to shut down the engine during LPG operation. In another embodiment of the invention, combination switch 356 can operate as a kill switch for both gasoline operation and LPG operation. During LPG operation, combination switch 356 may actuate fuel switch 354 with actuation of combination switch 356 to ground magneto 76 and kill the engine. That is, combination switch 356 connects first point 364(a) to second point 364(b) and also actuates fuel switch 354 to connect fourth contact 360(d) to sixth contact 360(f) so that magneto 76 is coupled to ground terminal 358 killing the engine. At the same time, combination switch 356 connects third point 364(c) to fourth point 364(d) so that fuel cut solenoid 74 maintains connection to ground terminal 358 to remain closed even though fuel switch 354 interrupts connection between first contact 360(a) and second contact 360(b).

[00103] Microcontroller 89 may also include a Voltage Frequency and Low Oil Shutdown (VFO) module 366. VFO module 366 can measure parameters of an alternator driven by an engine in a generator. VFO module 366 monitors alternator voltage and frequency by receiving an input signal 368 from the alternator. Input signal 368 is 120 VAC and 60 Hz from the alternator as a monitoring point for VFO module 366. VFO module 366 allows the engine to run if alternator parameters are within preset limits and shuts down the engine if the parameters are outside the limits. VFO module 366 can also monitor oil volume within the engine by receiving an input signal from an oil level switch 370 shown in the wiring diagram engine block 372. VFO module 366 may allow the engine to operate only if the oil volume is greater than a preset lower limit and can shutdown the engine by initiating connection between the ignition coil or magneto 76 and ground terminal 358.

[00104] Beneficially, embodiments of the invention provide for a fuel lockout switch to ensure that two fuels are not simultaneously delivered to a dual fuel internal combustion engine and to efficiently convert operation of the engine between the fuel sources. Embodiments of the invention also provide for a dual fuel generator with a

remotely mounted gaseous fuel regulator system. Embodiments of the invention also provide for a batteryless dual fuel internal combustion engine having a liquid fuel cut-off coupled to a carburetor to selectively interrupt liquid fuel.

[00105] Therefore, according to one embodiment of the invention, a dual fuel engine includes an engine operable on a gaseous fuel and a liquid fuel and a switch to change operation of the engine between gaseous fuel and liquid fuel. The dual fuel engine also includes a carburetor attached to an intake of the engine to mix air and fuel and connect to a gaseous fuel source and a liquid fuel source. A liquid fuel cut-off attaches to the carburetor to interrupt liquid fuel upon actuation of the switch from liquid fuel to gaseous fuel.

[00106] According to another embodiment of the invention, a batteryless dual fuel generator includes a housing containing a pull start engine coupled to drive an alternator, the engine operable on a gaseous fuel and a liquid fuel. A carburetor attaches to an intake of the engine and includes a throat to mix fuel with air, a float bowl, and a fuel passage to provide liquid fuel from the float bowl to the throat. The generator also includes a fuel shutoff attached to the carburetor to close the fuel passage upon selection of engine operation to gaseous fuel.

[00107] According to yet another embodiment of the invention, a carburetor having a fuel shutoff includes a carburetor with a float bowl, a throat, and a fuel passage to provide fuel from the float bowl to the throat. The carburetor further includes a fuel shutoff coupled to the carburetor having a first end in the carburetor that actuates to close the fuel passage and a second end external to the carburetor to actuate the first end, and the fuel shutoff can actuate free from linear motion.

[00108] According to yet another embodiment of the invention, a method of assembling a dual fuel engine includes providing an engine operable on a gaseous fuel and a liquid fuel. The method also includes attaching a carburetor to an intake of the engine, the carburetor includes a throat to mix gaseous fuel with air and liquid fuel with air, a float bowl, and a fuel passage to provide liquid fuel from the float bowl to the throat. The method also includes coupling a switch to the engine to change operation of

the engine between gaseous fuel and liquid fuel and attaching a liquid fuel cut-off to the carburetor to close the fuel passage upon actuation of the switch from liquid fuel to gaseous fuel.

[00109] This written description uses examples to disclose the invention, including the best mode, and also to enable any person skilled in the art to practice the invention, including making and using any devices or systems and performing any incorporated methods. The patentable scope of the invention is defined by the claims, and may include other examples that occur to those skilled in the art. Such other examples are intended to be within the scope of the claims if they have structural elements that do not differ from the literal language of the claims, or if they include equivalent structural elements with insubstantial differences from the literal languages of the claims.

CLAIMS

What is claimed is:

1. A dual fuel engine comprising:

an engine operable on a gaseous fuel and a liquid fuel;

a switch to change operation of the engine between gaseous fuel and liquid fuel;

a carburetor attached to an intake of the engine to mix air and fuel and connect to a gaseous fuel source and a liquid fuel source; and

a liquid fuel cut-off attached to the carburetor to interrupt liquid fuel upon actuation of the switch from liquid fuel to gaseous fuel.

2. The dual fuel engine of claim 1, wherein the engine is a pull start, batteryless engine.

3. The dual fuel engine of claim 1, wherein the gaseous fuel is LPG and the liquid fuel is gasoline.

4. The dual fuel engine of claim 1 further comprising:

a liquid fuel valve along a liquid fuel line coupling the liquid fuel source to the carburetor; and

a gaseous fuel valve along a gaseous fuel line coupling the gaseous fuel source to the carburetor.

5. The dual fuel engine of claim 1, wherein the engine is a pull-start engine having an electrical power generator to supply electrical power.

6. The dual fuel engine of claim 5, wherein the switch is an electro-mechanical switch connecting one fuel source to the carburetor and connected to the electrical power generator; and

wherein the liquid fuel cut-off is a solenoid connected to open and close a fuel path to the pull-start engine in response to reception of electrical power from the switch.

7. The dual fuel engine of claim 5, wherein the liquid fuel cut-off is a solenoid valve powered by the electrical power generator.

8. The dual fuel engine of claim 7, wherein the switch selectively powers the solenoid valve by controlling electrical connection between the solenoid valve and the electrical power generator.

9. The dual fuel engine of claim 7, wherein the solenoid valve is normally open to provide liquid fuel to the engine when the solenoid valve is unpowered.

10. The dual fuel engine of claim 9, wherein a pull-starter drives the electrical power generator to power and close the solenoid valve while starting the engine on gaseous fuel.

11. The dual fuel engine of claim 7, wherein the electrical power generator comprises a magneto or an alternator coupled to a voltage regulator to provide a regulated voltage to the solenoid valve.

12. The dual fuel engine of claim 1, wherein the liquid fuel cut-off is manually actuated to interrupt liquid fuel.

13. The dual fuel engine of claim 1, wherein the liquid fuel cut-off actuates to interrupt liquid fuel free from linear motion.

14. The dual fuel engine of claim 1, wherein the liquid fuel cut-off comprises:

a rotating shaft extending through an aperture in the carburetor;

a fuel seal around the shaft to seal the aperture; and

a blocking member coupled to the shaft in the carburetor that rotates between a blocking and a non-blocking position to selectively block a liquid fuel path to the engine.

15. The dual fuel engine of claim 14 further comprising:

a lever coupled to the shaft outside the carburetor;

a spring coupled to the lever to hold the blocking member in either the blocking or non-blocking position; and

a cable coupled to the lever to pull against the spring and rotate the blocking member to the other of the blocking or non-blocking positions.

16. The dual fuel engine of claim 1, wherein the liquid fuel cut-off is magnetically actuated to selectively interrupt liquid fuel.

17. The dual fuel engine of claim 1 further comprising:

a spring pushing the liquid fuel cut-off to interrupt liquid fuel; and

an actuating magnet coupled to the carburetor to selectively pull the liquid fuel cut-off against the spring away from a position interrupting liquid fuel.

18. The dual fuel engine of claim 17 further comprising a housing at least partially enclosing the liquid fuel cutoff, the housing including:

a first section enclosing a plunger of the liquid fuel cut-off to the carburetor and holding the spring against the plunger; and

a second section coupled to the first section and enclosing the actuating magnet.

19. A batteryless dual fuel generator comprising:

a housing containing a pull start engine coupled to drive an alternator, the engine operable on a gaseous fuel and a liquid fuel;

a carburetor attached to an intake of the engine comprising:

a throat to mix fuel with air,

a float bowl,

a fuel passage to provide liquid fuel from the float bowl to the throat; and

a fuel shutoff attached to the carburetor to close the fuel passage upon selection of engine operation to gaseous fuel.

20. The batteryless dual fuel generator of claim 19, wherein the fuel shutoff actuates to close the fuel passage free from linear motion.

21. The batteryless dual fuel generator of claim 19, wherein the fuel shutoff comprises:

a rotating shaft extending through an opening in the carburetor; and

a valve member coupled to the shaft in the carburetor that rotates to control fuel flow into the fuel passage.

22. The batteryless dual fuel generator of claim 21, wherein the valve member is positioned in the float bowl and the shaft extends substantially horizontal through the opening.

23. The batteryless dual fuel generator of claim 21, wherein the valve member has a flow passage that aligns with the fuel passage to control fuel flow into the fuel passage.

24. The batteryless dual fuel generator of claim 21 further comprising:

a compression spring on the shaft in the carburetor pushing the valve member to close the fuel passage; and

a plug in the opening surrounding the shaft to hold the compression spring against the valve member.

25. The batteryless dual fuel generator of claim 24 further comprising:

a lever coupled to the shaft outside the carburetor; and

a cable coupled to the lever to actuate the valve member to open and close the fuel passage.

26. The batteryless dual fuel generator of claim 24 further comprising one or more fuel seals within the plug to seal around the shaft.

27. The batteryless dual fuel generator of claim 19, wherein the fuel shutoff is magnetically actuated to selectively close the fuel passage, controlled by a manually actuated magnet coupled to the carburetor.

28. The batteryless dual fuel generator of claim 19 further comprising:

a spring pushing the fuel shutoff to close the fuel passage; and

an actuating magnet coupled to the carburetor to selectively pull the fuel shutoff against the spring to open the fuel passage.

29. The batteryless dual fuel generator of claim 28 further comprising a housing at least partially enclosing the fuel shutoff, the housing including:

a first section enclosing a plunger of the fuel shutoff to the carburetor and holding the spring against the plunger; and

a second section coupled to the first section and enclosing the actuating magnet.

30. The batteryless dual fuel generator of claim 19, wherein the fuel shutoff is a carburetor cutoff solenoid; and

wherein the generator further comprises:

a charge winding to generate electrical power to operate the carburetor cutoff solenoid, and

a switch to selectively power the carburetor cutoff solenoid by controlling electrical connection between the carburetor cutoff solenoid and the charge winding.

31. The batteryless dual fuel generator of claim 30, wherein the carburetor cutoff solenoid is normally open to provide liquid fuel to the engine when the carburetor cutoff solenoid is unpowered.

32. The batteryless dual fuel generator of claim 31, wherein a pull-starter drives the engine operating the charge winding to power and close the carburetor cutoff solenoid while starting the engine on gaseous fuel.

33. The batteryless dual fuel generator of claim 30, wherein the switch is an electro-mechanical switch connected to the charge winding and connecting at least one fuel source to the carburetor to selectively control fuel flow from the at least one fuel source to the carburetor.

34. The batteryless dual fuel generator of claim 30, wherein the charge winding is coupled to a voltage regulator to provide a regulated voltage to the carburetor cutoff solenoid.

35. A carburetor having a fuel shutoff comprising:

a carburetor comprising:

a float bowl,

a throat,

a fuel passage to provide fuel from the float bowl to the throat; and

a fuel shutoff coupled to the carburetor having a first end in the carburetor that actuates to close the fuel passage and a second end external to the carburetor to actuate the first end; and

wherein the fuel shutoff actuates free from linear motion.

36. The carburetor having a fuel shutoff of claim 35, wherein the fuel shutoff is a manually actuated fuel shutoff.

37. The carburetor having a fuel shutoff of claim 35, wherein the fuel shutoff comprises a shaft extending into the carburetor through an aperture in the float bowl and coupled to a valve tip in the float bowl that rotates to open and close the fuel passage.

38. The carburetor having a fuel shutoff of claim 37, wherein the valve tip rotates parallel to an inlet of the fuel passage between a first position permitting fuel flow into the inlet and a second position blocking fuel flow into the inlet.

39. The carburetor having a fuel shutoff of claim 37, wherein the fuel passage has an inlet with a substantially flat perimeter edge and the valve tip maintains planar contact with the perimeter edge while rotating to open and close the fuel passage.

40. The carburetor having a fuel shutoff of claim 39, wherein the shaft is substantially horizontal and the inlet of the fuel passage faces substantially horizontal.

41. The carburetor having a fuel shutoff of claim 39 further comprising:

a plug in the aperture around the shaft; and

a compression spring around the shaft in the float bowl pushing against the plug to hold the valve tip against the perimeter edge of the inlet.

42. The carburetor having a fuel shutoff of claim 41 further comprising a first fuel seal between the shaft and plug, the first fuel seal comprising a primary o-ring in an o-ring groove in the shaft.

43. The carburetor having a fuel shutoff of claim 42 further comprising:

a second fuel seal between the shaft and plug, the second fuel seal comprising a secondary o-ring in a counterbore in the plug; and

a support member mounted over the counterbore around the shaft to hold the secondary o-ring in the counterbore.

44. The carburetor having a fuel shutoff of claim 37 further comprising:

a lever coupled to the shaft outside of the carburetor;

a spring coupled to the lever to hold the fuel shutoff opening the fuel passage; and

a cable coupled to the lever to move the lever against the spring and rotate the fuel shutoff to close the fuel passage.

45. The carburetor having a fuel shutoff of claim 37, wherein the valve tip comprises thermoplastic.

46. The carburetor having a fuel shutoff of claim 37, wherein the valve tip comprises one of an oval and stadium shape.

47. The carburetor having a fuel shutoff of claim 37, wherein the valve tip has a cutout that aligns with the fuel passage to open the fuel passage.

48. A method of assembling a dual fuel engine comprising:

providing an engine operable on a gaseous fuel and a liquid fuel;

attaching a carburetor to an intake of the engine, the carburetor comprising:

a throat to mix gaseous fuel with air and liquid fuel with air,

a float bowl,

a fuel passage to provide liquid fuel from the float bowl to the throat;

coupling a switch to the engine to change operation of the engine between gaseous fuel and liquid fuel; and

attaching a liquid fuel cut-off to the carburetor to close the fuel passage upon actuation of the switch from liquid fuel to gaseous fuel.

49. The method of claim 48 further comprising coupling a manually operated control operatively to the liquid fuel cut-off.

50. The method of claim 48, wherein attaching the liquid fuel cut-off to the carburetor comprises:

providing a shaft having a valve tip located at an end of the shaft;

installing a compression spring on the shaft;

installing a plug on the shaft so that the compression spring is positioned between the plug and the valve tip; and

anchoring the plug in an aperture in the carburetor so that the compression spring holds the valve tip to an inlet of the fuel passage.

51. The method of claim 50, wherein providing the shaft having a valve tip located at an end of the shaft comprises pressing the valve tip onto the shaft.

52. The method of claim 50 further comprising positioning at least one fuel seal on the shaft to seal between the shaft and plug.

53. The method of claim 50, wherein the shaft rotates the valve tip between a first position allowing fuel flow into the fuel passage and a second position blocking fuel flow into the fuel passage.

54. The method of claim 53, wherein the valve tip comprises an oval or stadium shape with a cutout in the oval or stadium shape that aligns with the fuel passage when the valve tip is rotated to the first position such that fuel can pass through the cutout into the fuel passage.

55. The method of claim 53 further comprising:

coupling a lever to the shaft;

attaching a control spring to the lever to actuate the shaft to one of the first position and second position; and

attaching a cable to the lever to actuate the shaft to the other of the first position and second position.

56. The dual fuel engine of claim 7, wherein the solenoid valve is open to provide liquid fuel to the engine when the solenoid valve is powered.

57. The dual fuel engine of claim 56, wherein a pull-starter drives the electrical power generator to power and open the solenoid valve while starting the engine on liquid fuel.

58. The batteryless dual fuel generator of claim 30, wherein the carburetor cutoff solenoid is open to provide liquid fuel to the engine when the carburetor cutoff solenoid is powered.

59. The batteryless dual fuel generator of claim 58, wherein a pull-starter drives the engine operating the charge winding to power and open the carburetor cutoff solenoid while starting the engine on liquid fuel.

60. The dual fuel engine of claim 7 further comprising a microcontroller to close the solenoid valve when the engine operates on gaseous fuel and open the solenoid valve to operate the engine on liquid fuel.

61. The dual fuel engine of claim 60, wherein the microcontroller closes the solenoid valve during engine shutdown from operation on liquid fuel.

62. The batteryless dual fuel generator of claim 30, wherein the switch is a microcontroller configured to close the carburetor cutoff solenoid when the engine operates on gaseous fuel and to open the carburetor cutoff solenoid to operate the engine on liquid fuel.

63. The batteryless dual fuel generator of claim 62, wherein the microcontroller closes the carburetor cutoff solenoid during engine shutdown from operation on liquid fuel.

ABSTRACT

A dual fuel engine includes an engine operable on a gaseous fuel and a liquid fuel and a switch to change operation of the engine between gaseous fuel and liquid fuel. The dual fuel engine also includes a carburetor attached to an intake of the engine to mix air and fuel and connect to a gaseous fuel source and a liquid fuel source. A liquid fuel cut-off attaches to the carburetor to interrupt liquid fuel upon actuation of the switch from liquid fuel to gaseous fuel.

DECLARATION (37 CFR 1.63) FOR UTILITY OR DESIGN APPLICATION USING AN APPLICATION DATA SHEET (37 CFR 1.76)

Title of Invention	BATTERYLESS DUAL FUEL ENGINE WITH LIQUID FUEL CUT-OFF

As the below named inventor, I hereby declare that

This declaration is directed to: ☑ The attached application, or

☐ United States application or PCT international application number _____

filed on _____

The above-identified application was made or authorized to be made by me.

I believe that I am the original inventor or an original joint inventor of a claimed invention in the application.

I hereby acknowledge that any willful false statement made in this declaration is punishable under 18 U.S.C. 1001 by fine or imprisonment of not more than five (5) years, or both.

WARNING:

Petitioner/applicant is cautioned to avoid submitting personal information in documents filed in a patent application that may contribute to identity theft. Personal information such as social security numbers, bank account numbers, or credit card numbers (other than a check or credit card authorization form PTO-2038 submitted for payment purposes) is never required by the USPTO to support a petition or an application. If this type of personal information is included in documents submitted to the USPTO, petitioners/applicants should consider redacting such personal information from the documents before submitting them to the USPTO. Petitioner/applicant is advised that the record of a patent application is available to the public after publication of the application (unless a non-publication request in compliance with 37 CFR 1.213(a) is made in the application) or issuance of a patent. Furthermore, the record from an abandoned application may also be available to the public if the application is referenced in a published application or an issued patent (see 37 CFR 1.14). Checks and credit card authorization forms PTO-2038 submitted for payment purposes are not retained in the application file and therefore are not publicly available.

LEGAL NAME OF INVENTOR

Inventor: Kendall J. Collie Date (Optional): 10/27/15

Signature: [signature]

Note: An application data sheet (PTO/SB/14 or equivalent), including naming the entire inventive entity, must accompany this form. Use an additional PTO/AIA/01 form for each additional inventor.

DECLARATION (37 CFR 1.63) FOR UTILITY OR DESIGN APPLICATION USING AN APPLICATION DATA SHEET (37 CFR 1.76)

Title of Invention	BATTERYLESS DUAL FUEL ENGINE WITH LIQUID FUEL CUT-OFF

As the below named inventor, I hereby declare that:

This declaration is directed to:

☑ The attached application, or

☐ United States application or PCT international application number _____

filed on _____

The above-identified application was made or authorized to be made by me.

I believe that I am the original inventor or an original joint inventor of a claimed invention in the application.

I hereby acknowledge that any willful false statement made in this declaration is punishable under 18 U.S.C. 1001 by fine or imprisonment of not more than five (5) years, or both.

WARNING:

Petitioner/applicant is cautioned to avoid submitting personal information in documents filed in a patent application that may contribute to identity theft. Personal information such as social security numbers, bank account numbers, or credit card numbers (other than a check or credit card authorization form PTO-2038 submitted for payment purposes) is never required by the USPTO to support a petition or an application. If this type of personal information is included in documents submitted to the USPTO, petitioners/applicants should consider redacting such personal information from the documents before submitting them to the USPTO. Petitioner/applicant is advised that the record of a patent application is available to the public after publication of the application (unless a non-publication request in compliance with 37 CFR 1.213(a) is made in the application) or issuance of a patent. Furthermore, the record from an abandoned application may also be available to the public if the application is referenced in a published application or an issued patent (see 37 CFR 1.14). Checks and credit card authorization forms PTO-2038 submitted for payment purposes are not retained in the application file and therefore are not publicly available.

LEGAL NAME OF INVENTOR

Inventor: Mark J. Sarder Date (Optional): _____

Signature: Mark J. Sarder

Note: An application data sheet (PTO/SB/14 or equivalent), including naming the entire inventive entity, must accompany this form. Use an additional PTO/AIA/01 form for each additional inventor.

DECLARATION (37 CFR 1.63) FOR UTILITY OR DESIGN APPLICATION USING AN APPLICATION DATA SHEET (37 CFR 1.76)

Title of Invention	BATTERYLESS DUAL FUEL ENGINE WITH LIQUID FUEL CUT-OFF

As the below named inventor, I hereby declare that:

This declaration is directed to:

☑ The attached application, or

☐ United States application or PCT international application number _____

filed on _____

The above-identified application was made or authorized to be made by me.

I believe that I am the original inventor or an original joint inventor of a claimed invention in the application.

I hereby acknowledge that any willful false statement made in this declaration is punishable under 18 U.S.C. 1001 by fine or imprisonment of not more than five (5) years, or both.

WARNING:

Petitioner/applicant is cautioned to avoid submitting personal information in documents filed in a patent application that may contribute to identity theft. Personal information such as social security numbers, bank account numbers, or credit card numbers (other than a check or credit card authorization form PTO-2038 submitted for payment purposes) is never required by the USPTO to support a petition or an application. If this type of personal information is included in documents submitted to the USPTO, petitioners/applicants should consider redacting such personal information from the documents before submitting them to the USPTO. Petitioner/applicant is advised that the record of a patent application is available to the public after publication of the application (unless a non-publication request in compliance with 37 CFR 1.213(a) is made in the application) or issuance of a patent. Furthermore, the record from an abandoned application may also be available to the public if the application is referenced in a published application or an issued patent (see 37 CFR 1.14). Checks and credit card authorization forms PTO-2038 submitted for payment purposes are not retained in the application file and therefore are not publicly available.

LEGAL NAME OF INVENTOR

Inventor: Aleko D. Sotiriades Date (Optional): 10/23/2015

Signature: Aleko D. Sotiriades

Note: An application data sheet (PTO/SB/14 or equivalent), including naming the entire inventive entity, must accompany this form. Use an additional PTO/AIA/01 form for each additional inventor.

DECLARATION (37 CFR 1.63) FOR UTILITY OR DESIGN APPLICATION USING AN APPLICATION DATA SHEET (37 CFR 1.76)

Title of Invention	BATTERYLESS DUAL FUEL ENGINE WITH LIQUID FUEL CUT-OFF

As the below named inventor, I hereby declare that:

This declaration is directed to:

☑ The attached application, or

☐ United States application or PCT international application number _____

filed on _____

The above-identified application was made or authorized to be made by me.

I believe that I am the original inventor or an original joint inventor of a claimed invention in the application.

I hereby acknowledge that any willful false statement made in this declaration is punishable under 18 U.S.C. 1001 by fine or imprisonment of not more than five (5) years, or both.

WARNING:

Petitioner/applicant is cautioned to avoid submitting personal information in documents filed in a patent application that may contribute to identity theft. Personal information such as social security numbers, bank account numbers, or credit card numbers (other than a check or credit card authorization form PTO-2038 submitted for payment purposes) is never required by the USPTO to support a petition or an application. If this type of personal information is included in documents submitted to the USPTO, petitioners/applicants should consider redacting such personal information from the documents before submitting them to the USPTO. Petitioner/applicant is advised that the record of a patent application is available to the public after publication of the application (unless a non-publication request in compliance with 37 CFR 1.213(a) is made in the application) or issuance of a patent. Furthermore, the record from an abandoned application may also be available to the public if the application is referenced in a published application or an issued patent (see 37 CFR 1.14). Checks and credit card authorization forms PTO-2038 submitted for payment purposes are not retained in the application file and therefore are not publicly available.

LEGAL NAME OF INVENTOR

Inventor: James J. Dehn Date (Optional): 10/23/2015

Signature: James J Dehn

Note: An application data sheet (PTO/SB/14 or equivalent), including naming the entire inventive entity, must accompany this form. Use an additional PTO/AIA/01 form for each additional inventor.

DECLARATION (37 CFR 1.63) FOR UTILITY OR DESIGN APPLICATION USING AN APPLICATION DATA SHEET (37 CFR 1.76)

Title of Invention	BATTERYLESS DUAL FUEL ENGINE WITH LIQUID FUEL CUT-OFF

As the below named inventor, I hereby declare that:

This declaration is directed to:

☑ The attached application, or

☐ United States application or PCT international application number _____

filed on _____

The above-identified application was made or authorized to be made by me.

I believe that I am the original inventor or an original joint inventor of a claimed invention in the application.

I hereby acknowledge that any willful false statement made in this declaration is punishable under 18 U.S.C. 1001 by fine or imprisonment of not more than five (5) years, or both.

WARNING:

Petitioner/applicant is cautioned to avoid submitting personal information in documents filed in a patent application that may contribute to identity theft. Personal information such as social security numbers, bank account numbers, or credit card numbers (other than a check or credit card authorization form PTO-2038 submitted for payment purposes) is never required by the USPTO to support a petition or an application. If this type of personal information is included in documents submitted to the USPTO, petitioners/applicants should consider redacting such personal information from the documents before submitting them to the USPTO. Petitioner/applicant is advised that the record of a patent application is available to the public after publication of the application (unless a non-publication request in compliance with 37 CFR 1.213(a) is made in the application) or issuance of a patent. Furthermore, the record from an abandoned application may also be available to the public if the application is referenced in a published application or an issued patent (see 37 CFR 1.14). Checks and credit card authorization forms PTO-2038 submitted for payment purposes are not retained in the application file and therefore are not publicly available.

LEGAL NAME OF INVENTOR

Inventor: Leigh Jenison Date (Optional): 10·23·2015

Signature: Leigh Jenison

Note: An application data sheet (PTO/SB/14 or equivalent), including naming the entire inventive entity, must accompany this form. Use an additional PTO/AIA/01 form for each additional inventor.

DECLARATION (37 CFR 1.63) FOR UTILITY OR DESIGN APPLICATION USING AN APPLICATION DATA SHEET (37 CFR 1.76)

Title of Invention	BATTERYLESS DUAL FUEL ENGINE WITH LIQUID FUEL CUT-OFF

As the below named inventor, I hereby declare that:

This declaration is directed to:

☑ The attached application, or

☐ United States application or PCT international application number _____

filed on _____

The above-identified application was made or authorized to be made by me.

I believe that I am the original inventor or an original joint inventor of a claimed invention in the application.

I hereby acknowledge that any willful false statement made in this declaration is punishable under 18 U.S.C. 1001 by fine or imprisonment of not more than five (5) years, or both.

WARNING:

Petitioner/applicant is cautioned to avoid submitting personal information in documents filed in a patent application that may contribute to identity theft. Personal information such as social security numbers, bank account numbers, or credit card numbers (other than a check or credit card authorization form PTO-2038 submitted for payment purposes) is never required by the USPTO to support a petition or an application. If this type of personal information is included in documents submitted to the USPTO, petitioners/applicants should consider redacting such personal information from the documents before submitting them to the USPTO. Petitioner/applicant is advised that the record of a patent application is available to the public after publication of the application (unless a non-publication request in compliance with 37 CFR 1.213(a) is made in the application) or issuance of a patent. Furthermore, the record from an abandoned application may also be available to the public if the application is referenced in a published application or an issued patent (see 37 CFR 1.14). Checks and credit card authorization forms PTO-2038 submitted for payment purposes are not retained in the application file and therefore are not publicly available.

LEGAL NAME OF INVENTOR

Inventor: Hiroaki Sato Date (Optional): 10/23/15

Signature: H. Sato

Note: An application data sheet (PTO/SB/14 or equivalent), including naming the entire inventive entity, must accompany this form. Use an additional PTO/AIA/01 form for each additional inventor.

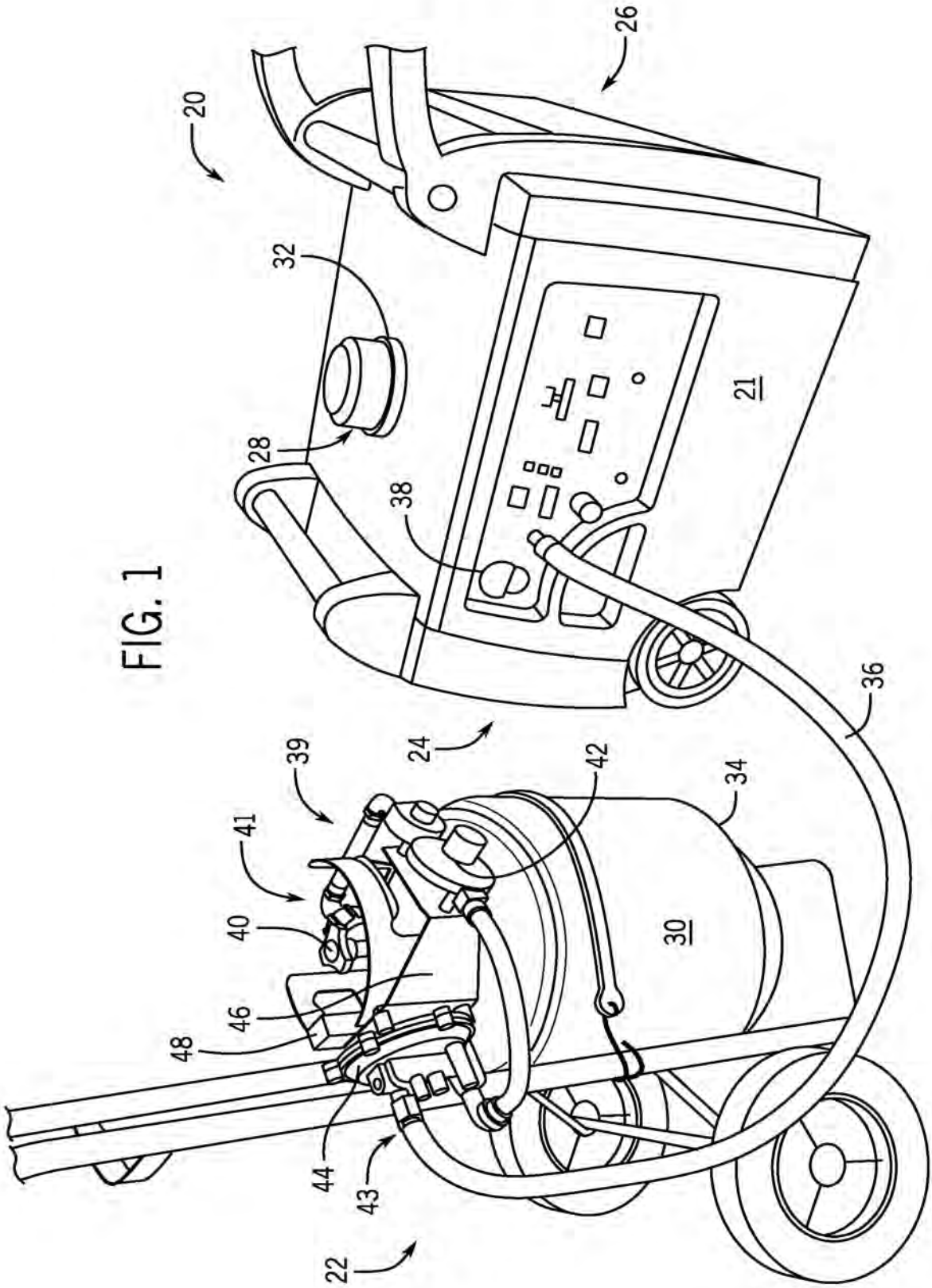

FIG. 1

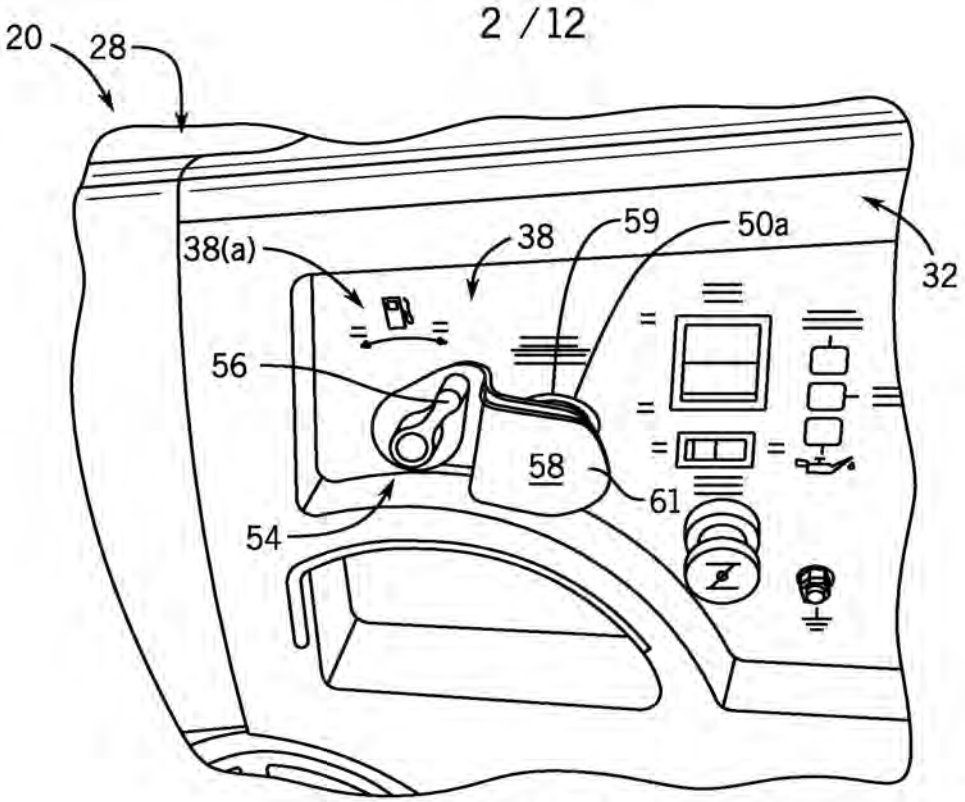
20
28
38(a)
38
59
50a
32
56
58
61
54

FIG. 2

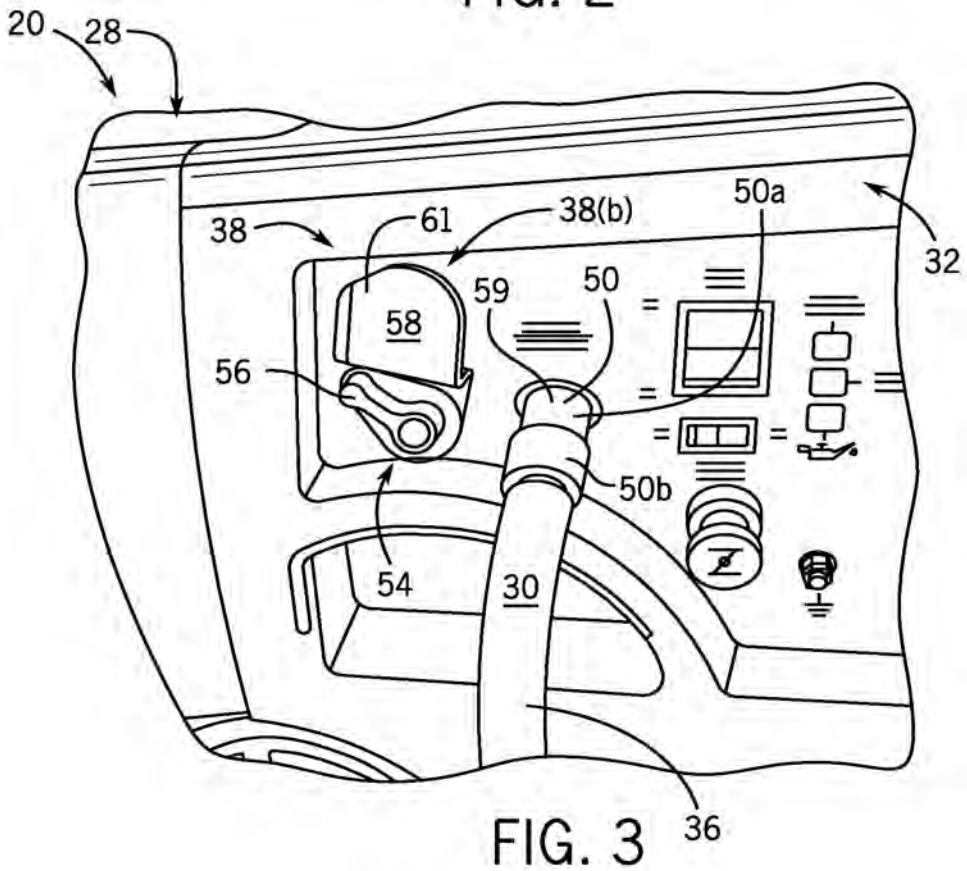
20
28
38
61
38(b)
50a
32
59
50
58
56
50b
54
30
36

FIG. 3

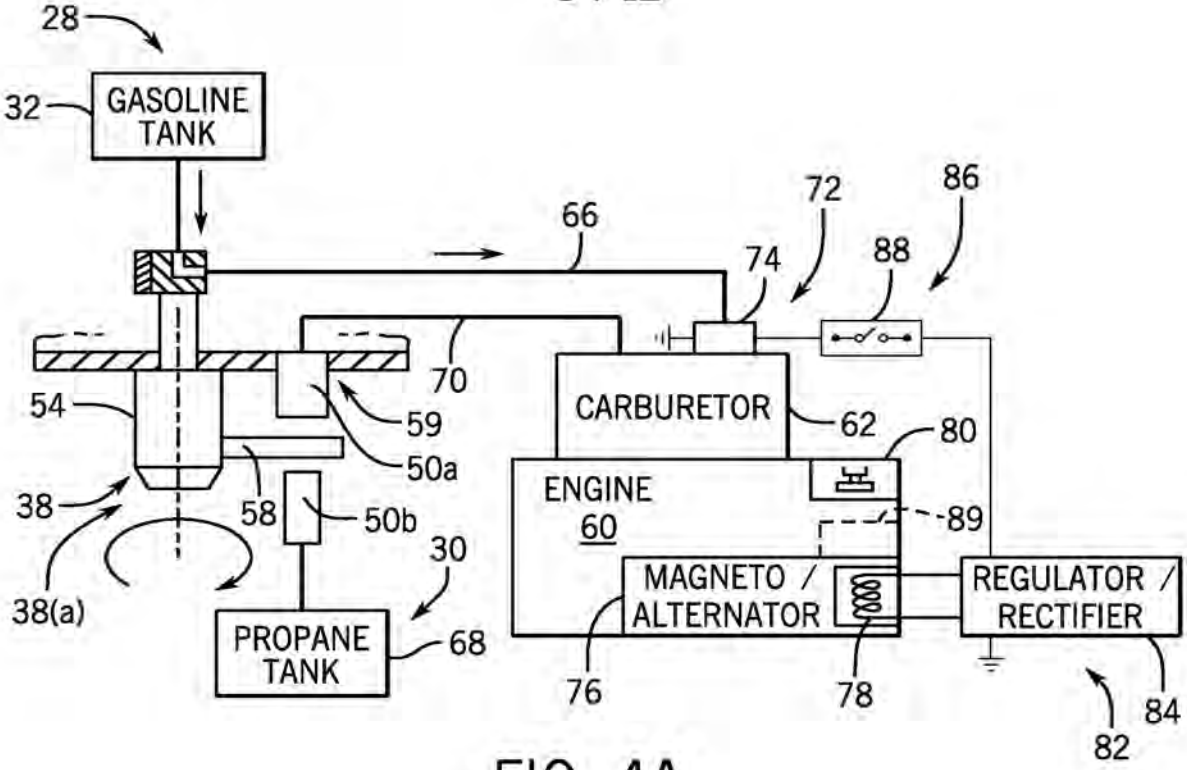
28
32
GASOLINE TANK
66
72
86
74
88
70
54
59
50a
CARBURETOR
62
80
38
58
50b
ENGINE
60
89
30
38(a)
MAGNETO / ALTERNATOR
REGULATOR / RECTIFIER
PROPANE TANK
68
76
78
84
82

FIG. 4A

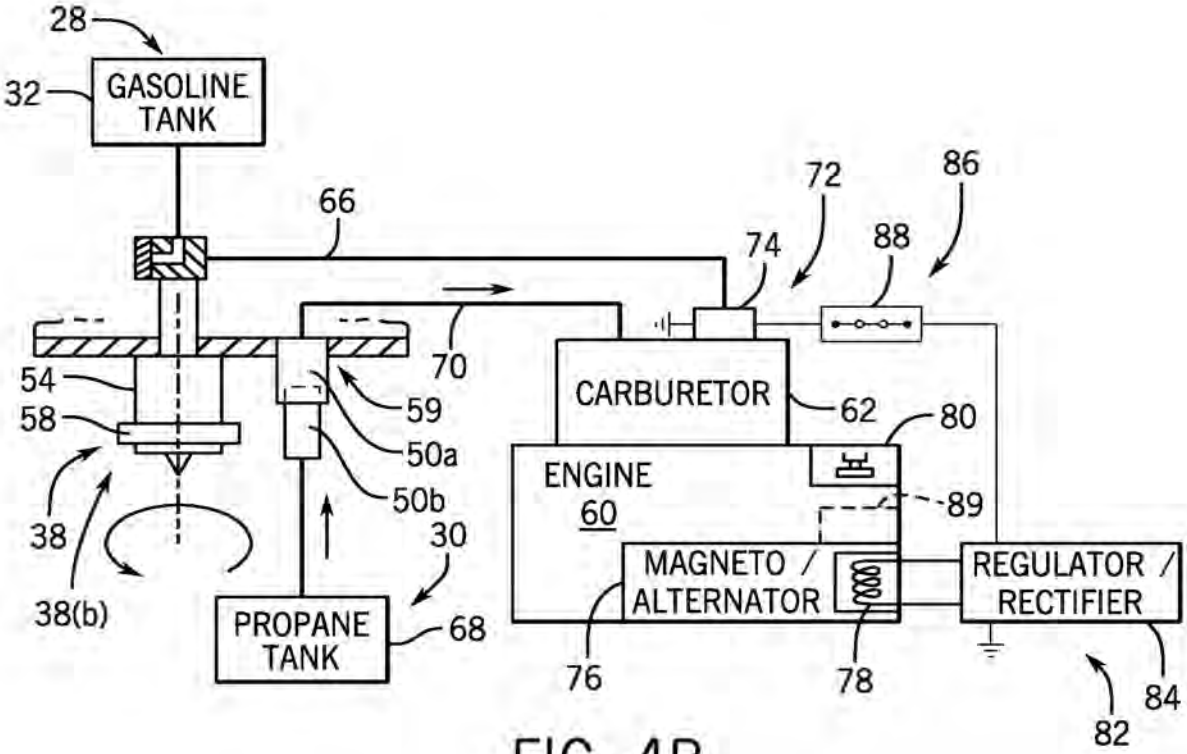
28
32
GASOLINE TANK
66
72
86
74
88
70
54
58
59
50a
CARBURETOR
62
80
ENGINE
60
50b
89
38
30
38(b)
MAGNETO / ALTERNATOR
REGULATOR / RECTIFIER
PROPANE TANK
68
76
78
84
82

FIG. 4B

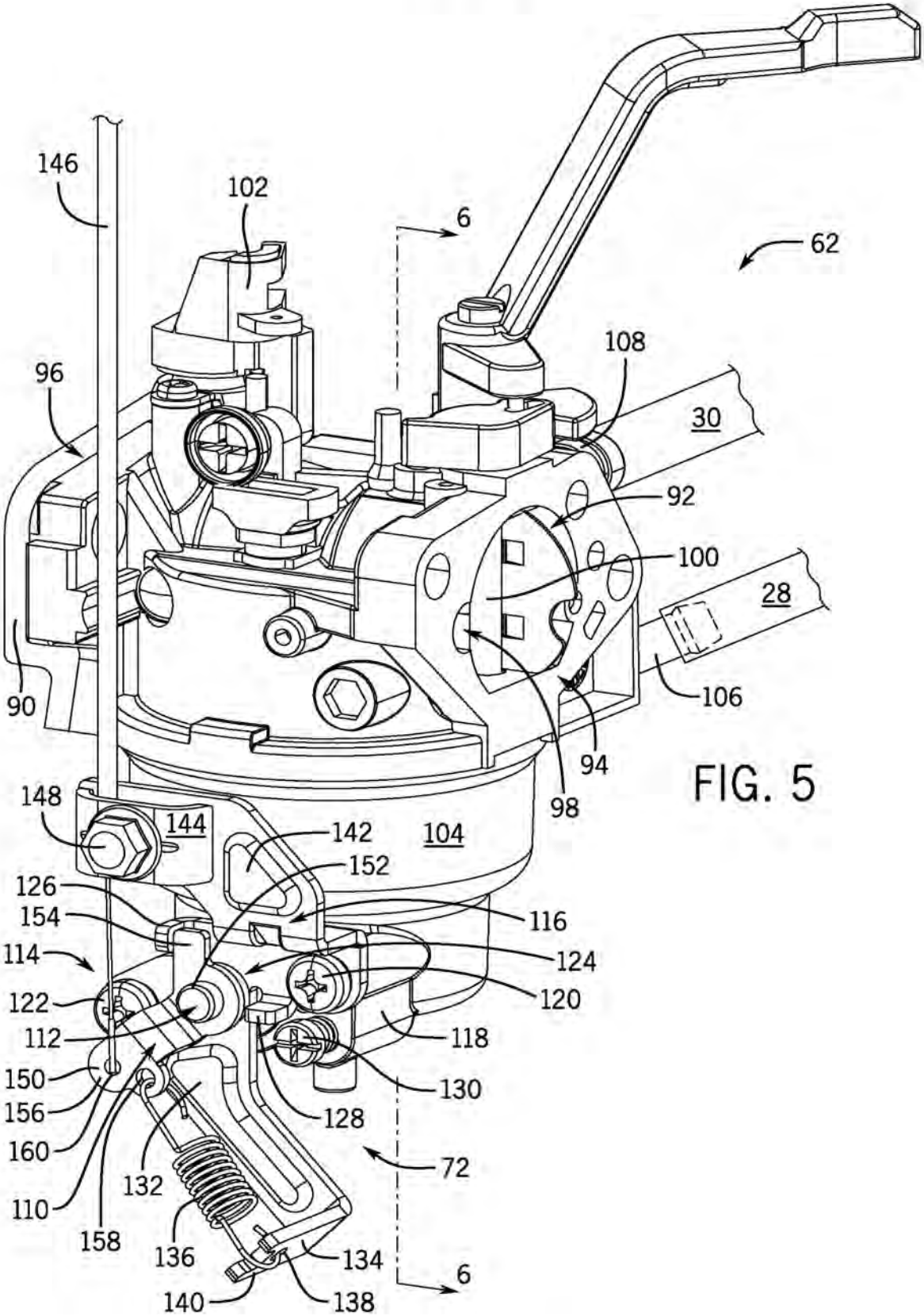
146
102
6
62
108
96
30
92
100
28
90
106
94
98
148
144
142
104
152
126
154
116
114
124
122
120
112
118
150
130
156
128
160
72
132
110
158
136
134
6
140
138

FIG. 5

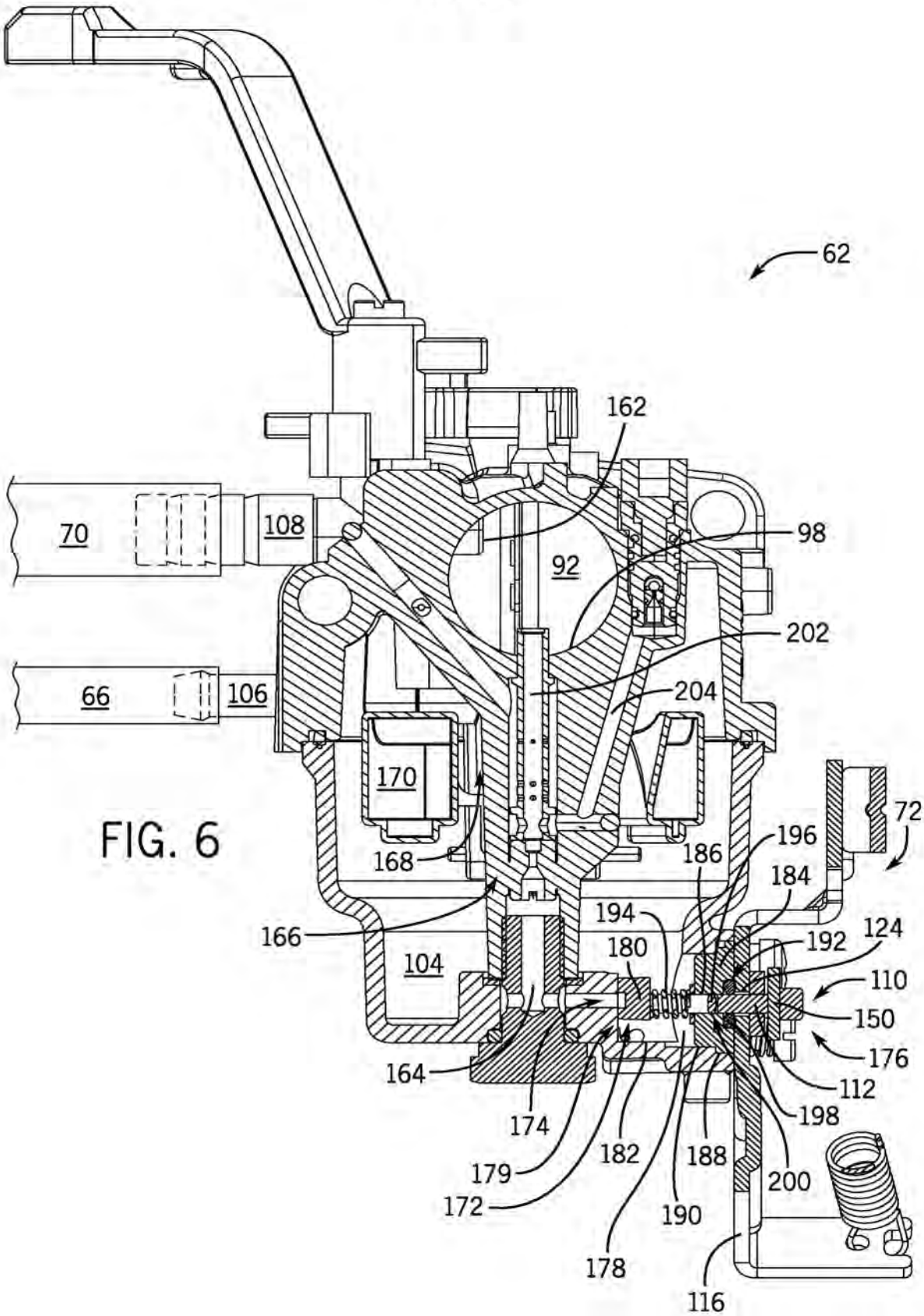
62
162
70
108
98
92
202
66
106
204
170
72
168
186
196
184
166
194
124
192
180
104
110
150
176
164
112
198
174
182
188
179
200
172
190
178
116

FIG. 6

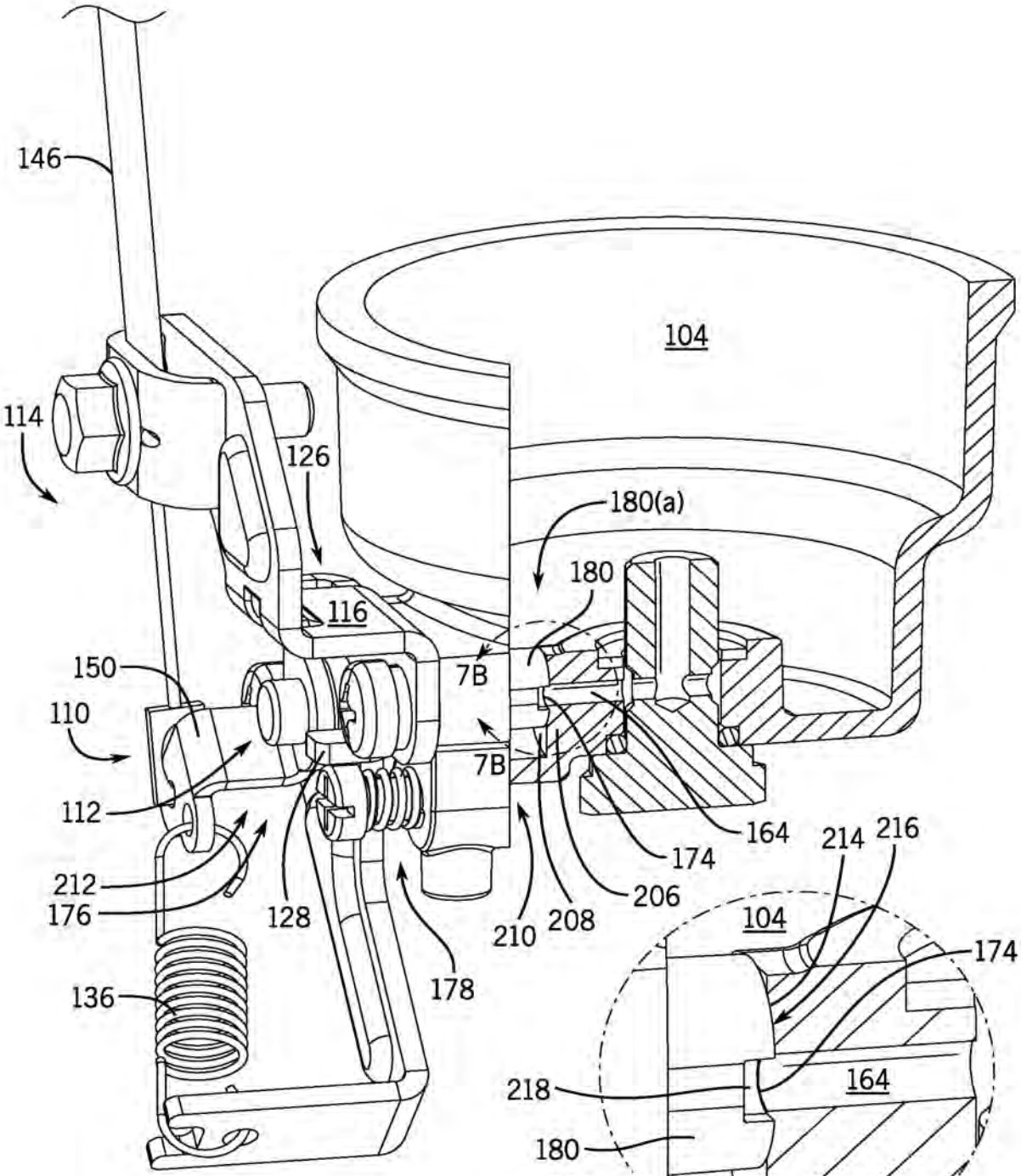
146
104
114
126
180(a)
180
116
150
7B
110
7B
112
164
214
216
174
212
206
176
128
210
208
104
174
136
178
218
164
180
208
206
180(a)

FIG. 7A

FIG. 7B

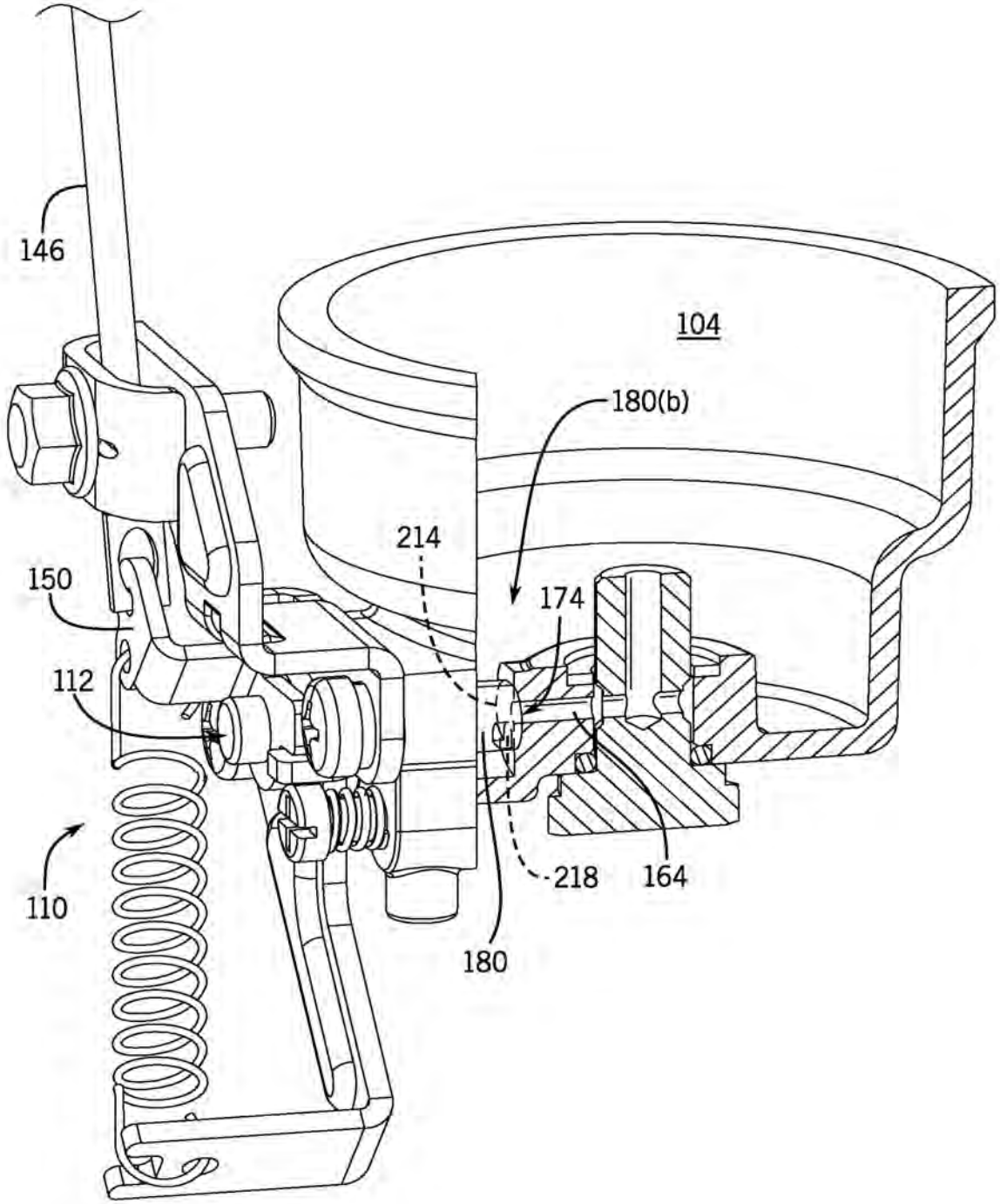

FIG. 8

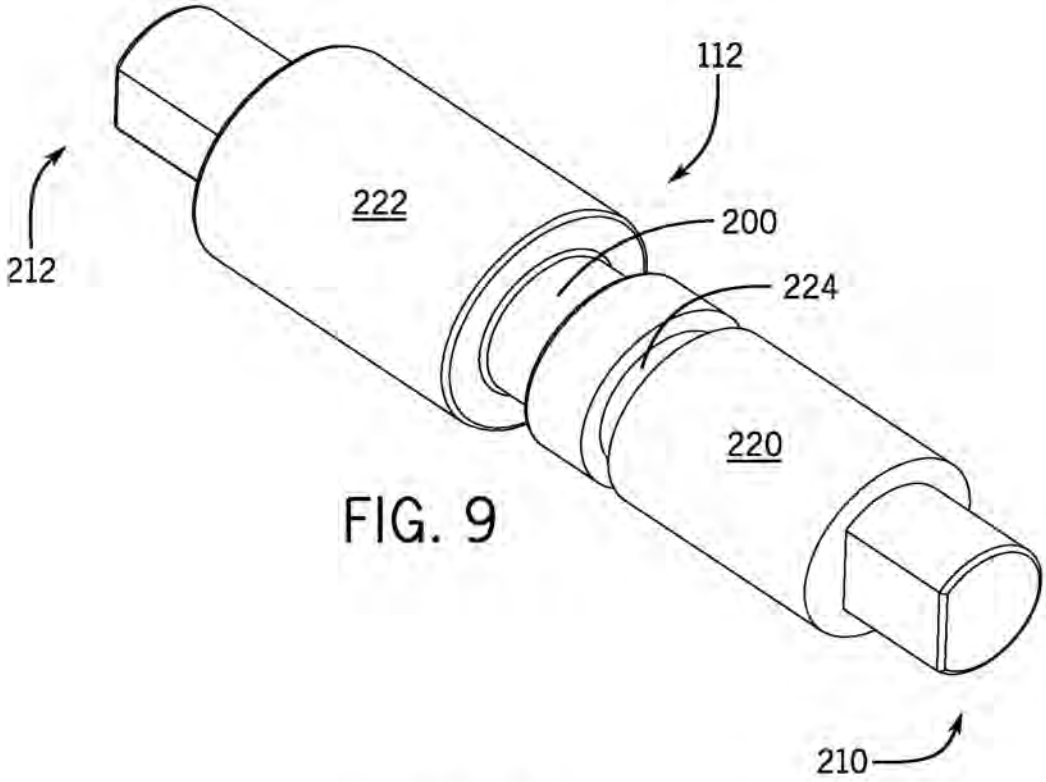

FIG. 9

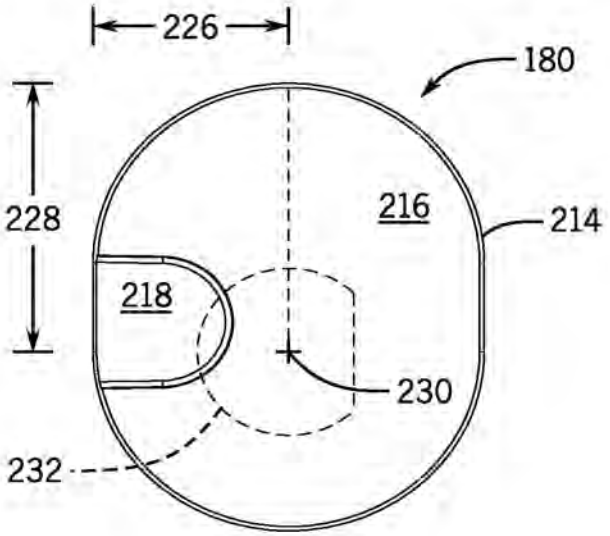

FIG. 10

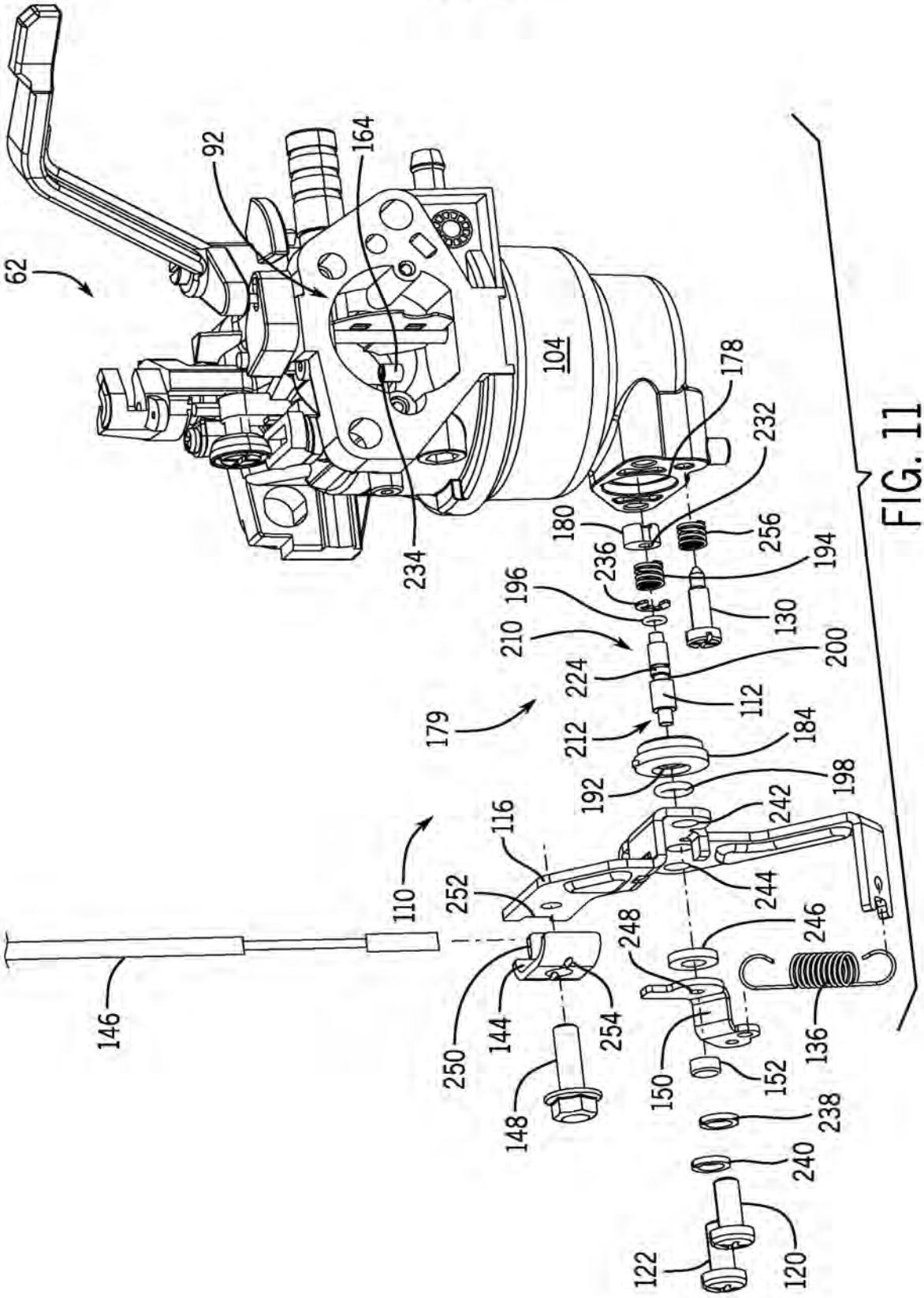
62
92
164
104
234
178
232
180
256
236
194
196
130
210
200
224
112
179
212
184
192
198
242
116
110
252
244
246
248
146
250
144
254
136
150
152
148
238
240
122
120

FIG. 11

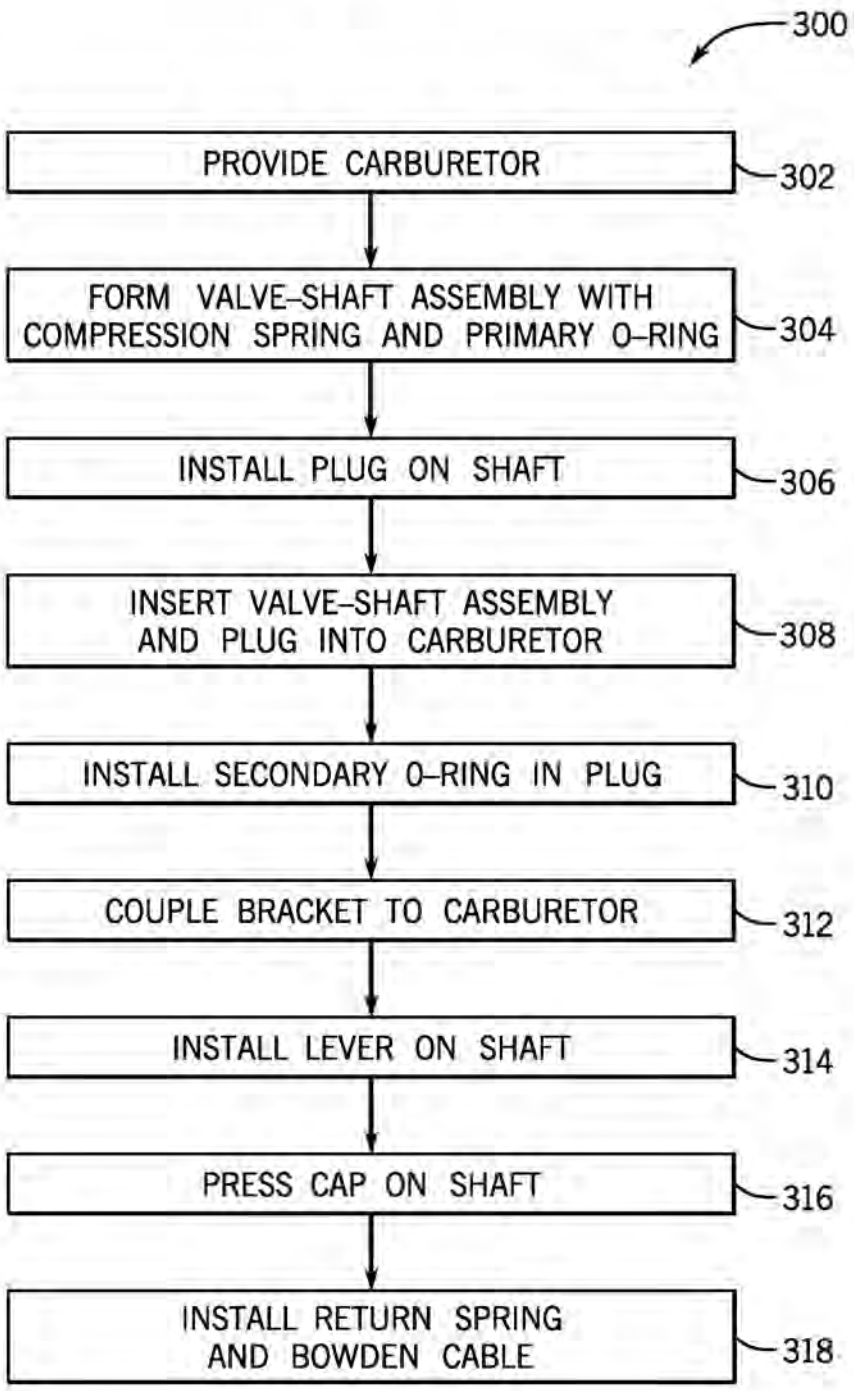
300
PROVIDE CARBURETOR
302
FORM VALVE-SHAFT ASSEMBLY WITH COMPRESSION SPRING AND PRIMARY O-RING
304
INSTALL PLUG ON SHAFT
306
INSERT VALVE-SHAFT ASSEMBLY AND PLUG INTO CARBURETOR
308
INSTALL SECONDARY O-RING IN PLUG
310
COUPLE BRACKET TO CARBURETOR
312
INSTALL LEVER ON SHAFT
314
PRESS CAP ON SHAFT
316
INSTALL RETURN SPRING AND BOWDEN CABLE
318

FIG. 12

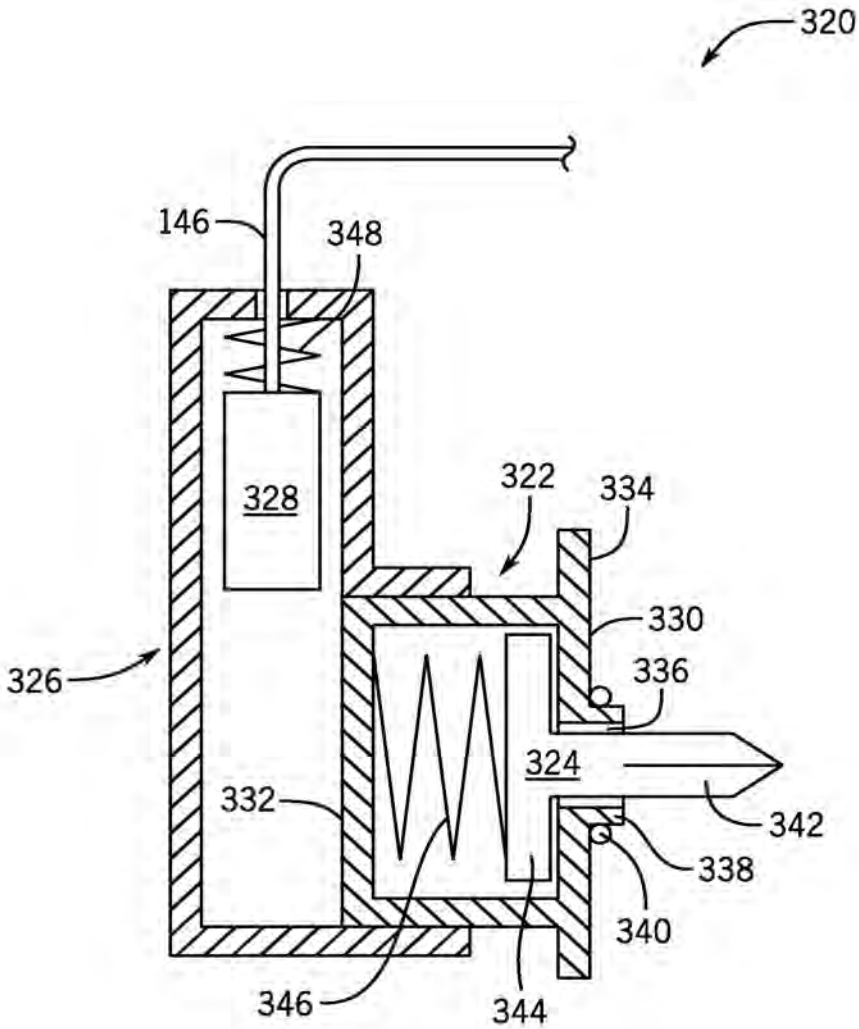

FIG. 13

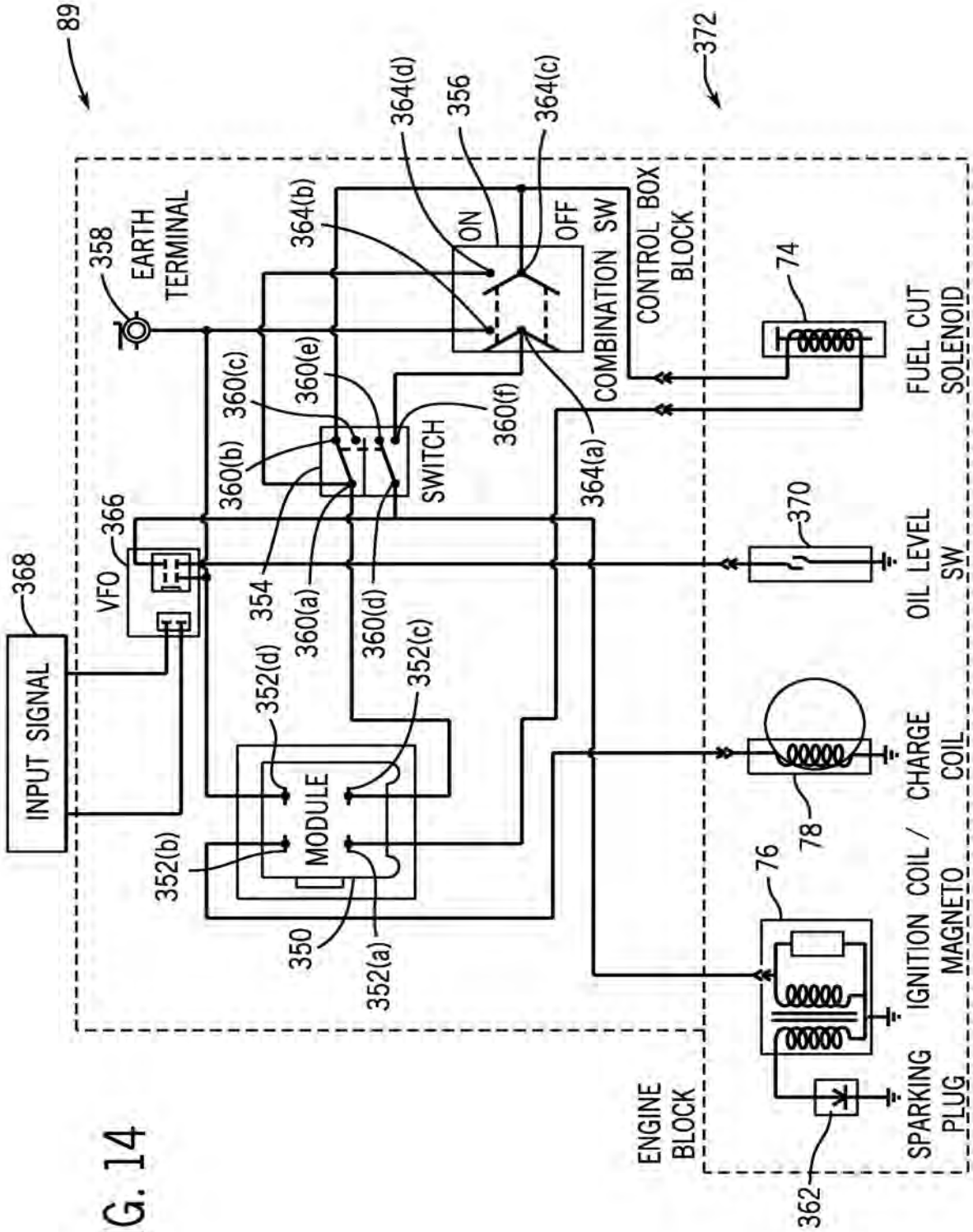
89
372
364(d)
356
364(c)
364(b)
358
EARTH TERMINAL
ON
OFF
COMBINATION SW
CONTROL BOX BLOCK
74
FUEL CUT SOLENOID
360(c)
360(e)
360(f)
360(b)
SWITCH
364(a)
366
VFO
368
INPUT SIGNAL
354
360(a)
360(d)
370
OIL LEVEL SW
352(d)
352(c)
352(b)
MODULE
350
352(a)
CHARGE COIL
78
76
IGNITION COIL / MAGNETO
SPARKING PLUG
362
ENGINE BLOCK

FIG. 14