IN THE UNITED STATES PATENT AND TRADEMARK OFFICE

BEFORE THE PATENT TRIAL AND APPEAL BOARD

HARBOR FREIGHT TOOLS USA INC.,

GENERAC POWER SYSTEMS, INC., and

MWE INVESTMENTS, LLC,

Petitioners

v.

CHAMPION POWER EQUIPMENT INC.,

Patent Owner.

Patent No. 10,393,034

Issued: August 27, 2019

Title: FUEL SYSTEM FOR A MULTI-FUEL INTERNAL COMBUSTION ENGINE

Inter Partes Review No. IPR2025-00805

DECLARATION OF TIMOTHY MORSE

TABLE OF CONTENTS

I. INTRODUCTION 7

II. QUALIFICATIONS AND EXPERIENCE 8

III. MATERIALS AND OTHER INFORMATION CONSIDERED 11

IV. SUMMARY OF OPINIONS 13

V. UNDERSTANDING OF PATENT LAW 14

A. Claim Construction 14

B. Obviousness 15

C. Anticipation 17

VI. THE PERSON OF ORDINARY SKILL IN THE ART 19

VII. STATE OF THE ART 21

A. Carburetors 21

B. Multi-Fuel Combustion Engines 22

C. Switches and Solenoids 23

VIII. SUMMARY OF THE ’034 PATENT 24

A. The ’034 Patent 24

B. Prosecution History 26

1. Distinguishing Poehlman’s Liquid and Gaseous Cutoff Solenoids 27

2. Distinguishing Kern and Graff’s Pressure Regulators 30

IX. LEVEL OF ORDINARY SKILL IN THE ART 31

X. CLAIM CONSTRUCTION 31

XI. OVERVIEW OF ASSERTED PRIOR ART 31

A. JPS61283734A ("Nakafushi") (Ex. 1004/1005) 31

B. U.S. Patent No. 5,301,644 ("Olmr") 35

C. U.S. Patent No. 4,372,276 ("Bernhardsson").....36

D. U.S. Patent Pub. No. 2011/0100335A1 ("Parlatore") 37

E. U.S. Patent Pub. No. 2014/0239645 ("Jungmann").....38

F. Kubota DF972 Workshop Manual ("Workshop Manual") 39

1. Liquid Fuel Operation.....39

2. Gaseous Fuel Operation.....42

3. Switch for Controlling Liquid/Gaseous Fuel Operation.....45

G. Kubota DF972 Operator's Manual ("Operator's Manual") 46

H. Tri-Fuel YouTube Video ("Tri-Fuel Video").....47

I. *Auto Fuel Systems*, by Duffy/Smith ("Duffy") 51

XII. THE CHALLENGED CLAIMS ARE UNPATENTABLE 53

A. Ground 1: Claims 1-3, 5-9 and 18 are obvious over Nakafushi in view of Olmr 53

1. Claim 1 53

2. Claim 2 79

3. Claim 3 82

4. Claim 5 86

5. Claim 6 86

6. Claim 7 87

7. Claim 8 89

8. Claim 9 90

9. Claim 18 92

B. Ground 2: Claims 4 and 10 are obvious over Nakafushi in view of Olmr and Duffy 94

1. Claim 4 94

2. Claim 10 98

C. Ground 3: Claims 19-23 are obvious over Nakafushi in view of Olmr and Bernhardsson and/or Duffy 100

1. Claim 19 100

2. Claim 20 106

3. Claim 21 106

4. Claim 22 107

5. Claim 23 107

D. Ground 4: Claims 11-13 and 16-17 are obvious over Nakafushi in view of Jungmann and Parlatore 109

1. Claim 11 109

2. Claim 12 135

3. Claim 13 135

4. Claim 16 136

5. Claim 17 138

E. Ground 5: Claims 14-15 and 24 are obvious over Nakafushi in view of Jungmann and Parlatore, with Olmr and/or Bernhardsson 138

1. Claim 14 138

2. Claim 15 140

3. Claim 24 140

F. Ground 6: Claims 1-3, 5-9, 11-14, 17-20, and 22-23 are anticipated by the Kubota DF972 Workshop Manual 142

1. Claim 1 142

2. Claim 2 155

3. Claim 3 161

4. Claim 5 164

5. Claim 6 165

6. Claim 7 167

7. Claim 8 170

8. Claim 9 172

9. Claim 11 173

10. Claim 12 186

11. Claim 13 188

12. Claim 14 188

13. Claim 17 189

14. Claim 18 190

15. Claim 19 191

16. Claim 20 191

17. Claim 22 192

18. Claim 23 192

G. Ground 7: Claim 4 is obvious over the Workshop Manual in view of Duffy 193

H. Ground 8: Claims 16 and 24 are obvious over the Workshop Manual in view of Parlatore and/or the Tri-Fuel Video 194

1. Claim 16 194

2. Claim 24 197

XIII. CONCLUSION.....202

I, Timothy Morse, submit this Declaration and declare as follows:

I. INTRODUCTION

1. I have been retained as an expert on behalf of Petitioner Harbor Freight Tools, Inc. ("Harbor Freight") as an independent expert consultant in support of Petitioner's request for *Inter Partes* Review No. IPR2025-00805 to review the challenged claims of U.S. Patent No. 10,393,034 ("the '034 patent," Ex. 1001), assigned to Champion Power Equipment, Inc. ("Patent Owner" or "Champion"). My opinions are set forth below.

2. My employer, Exponent, Inc., is being compensated for my time in connection with this *Inter Partes* Review at my standard consulting rate, but my compensation is not in any way tied to or affected by the outcome of this matter.

3. I have been asked to provide my opinions regarding whether Claims 1–24 of the '034 Patent are invalid. Specifically, this report addresses the invalidity of Claims 1–24 (the "Challenged Claims") of the '034 patent.

4. This report sets forth the opinions that I have formed based on the information available to me as of the date below. The opinions and facts set forth in this report are based upon my analysis of the '034 Patent and its claims, the prior art, the state of the art at the time of the invention, as well as my knowledge and extensive experience in this field.

5. My analysis of the materials submitted in this proceeding is ongoing

and I will continue to review any new material that is provided. This declaration is indicative of only those opinions that I have formed to date. I reserve the right to amend, revise, and/or supplement my opinions stated herein based on any new information that may become available to me or my continuing analysis of the materials already provided.

6. I am not currently and have not at any time in the past been an employee of Harbor Freight. I have no financial interest in Harbor Freight outside of assisting Harbor Freight as an expert in this and any related matters.

II. QUALIFICATIONS AND EXPERIENCE

7. My qualifications for forming the opinions in this report are summarized here and explained in more detail in my curriculum vitae ("CV"), which I understand is being appended hereto.

8. As detailed in my CV, I have extensive experience in the design, development, and manufacture of multi-fuel internal combustion engines and generators, with a career spanning over fifteen years in this field. I have specific expertise in thermal and flow processes and have a good understanding of the relevant mechanical principles and constraints associated with the implementation of such processes into physical products and equipment, including internal combustion engines and generators. I have also engaged in extensive consulting work, specializing in failure analysis, failure prevention, and design risk

assessment of power generation equipment and facilities, including power plants, fixed emergency power generation, and portable generators. I have personally investigated the causes of failure of many different types of portable generators.

9. I earned my Bachelor of Engineering in Mechanical Engineering from the Cooper Union for the Advancement of Science and Art in 2003. I completed a Master of Science in Mechanical Engineering in 2007 and a Doctor of Philosophy in Mechanical Engineering in 2009, both from Cornell University. I am a licensed Professional Engineer in mechanical engineering in California, Florida, Kansas, Massachusetts, New Hampshire, New York, Pennsylvania, Rhode Island, and Vermont. I am also a Certified Fire and Explosion Investigator with the National Association of Fire Investigators.

10. I am a member of the National Fire Protection Association (NFPA) and serve on two code committees responsible for developing safety standards in the US. One of these committees is the NFPA Technical Committee on Vehicular Alternative Fuel Systems (VAF-AAA), responsible for NFPA 52: Vehicular Natural Gas Fuel Systems Code. NFPA 52 applies to vehicles and vehicle internal combustion engines that operate with natural gas. One of my functions as a member of this committee is to understand how safety considerations for more common gasoline powered vehicles apply to natural gas powered vehicles. The other committee I serve on is the NFPA Technical Committee on Liquified

Petroleum Gases (LPG-AAA), responsible for NFPA 58: Liquified Petroleum Gas Code. NFPA 58 applies to the use of LPG in a wide range of applications, including portable generators and portable generator fueling systems.

11. I have performed research and analysis for the Portable Generators Manufacturers Association (PGMA). This work has included evaluating the safety of portable generators, including the generation of carbon monoxide, which is a byproduct of combustion. This research work has been presented to the US Consumer Product Safety Commission (CPSC).

12. I am also an active contributor to the scholarly literature in my field, being a named author on over twenty publications. Most of my publications went through the peer review process, appearing in sources like the *Journal of Fluid Mechanics* and the *Journal of Fluids and Structures*. Broadly speaking, these publications relate to the design and safety of fluid and thermal systems, like how the valve closure time affects pressure in a fluid system. In addition to researching and writing on emerging safety issues, I have presented my work over twenty-five times to various audiences including practicing engineers, which has led me to appreciate how a less experienced engineer would perceive the prior art and approach the technical problems disclosed in the prior art.

13. I also have broader consulting experience in the development and design of thermal and flow processes, products, and equipment. My project

experience includes turbines, compressors, valves, heat exchangers, boilers, furnaces, refrigeration systems, piping systems, autoclaves, heat transfer systems, flammable liquids, cryogenic liquids, consumer products, and medical devices. This work has included analysis of HVAC systems, the engineering analysis of gas extraction facilities, and the investigation into failures of generators and heat exchanges, among other applications.

14. I am currently employed as a Principal Engineer at Exponent, Inc., a US-based engineering and scientific consulting firm. Before joining Exponent, I was a researcher in the Fluid Dynamics Research Laboratories at Cornell University where I conducted research on the wakes of stationary and oscillating structures in a flow and particularly on how flow-induced vibration due to vortex shedding causes fatigue and failure of structures.

III. MATERIALS AND OTHER INFORMATION CONSIDERED

15. All the opinions contained in this declaration are based on the documents I have reviewed and my professional judgment, as well as my education, experience, and professional knowledge. I am not an attorney and I am not offering any purely legal opinions in this declaration. In forming the opinions expressed in this declaration, I relied upon my education, knowledge, and experience in the relevant field of the art, and have considered the viewpoint of a person having ordinary skill in the relevant art. I have considered the materials

referenced herein, including the ’034 Patent (Ex. 1001), the file history of the ’034 Patent (excerpts at Ex. 1002), and the prior art references listed in the table below. Each of these documents is a type of document that an expert in my field would have reasonably relied upon when forming their opinion.

Exhibit No.	Description
1001	U.S Patent No. 10,393,034 to Collie et al. (“the ’034 Patent”)
1002	File History for U.S. Patent No. 10,393,034 (“the ’034 File History”)
1004	JPS61283734A (Original) (“Nakafushi”)
1005	Certified Translation of JPS61283734A (“Nakafushi”)
1006	Small Engine Technology, Second Edition, Schuster, William A, (1999) (“Schuster”)
1007	U.S. Patent No. 5,301,644 (“Olmr”)
1008	U.S. Patent No. 4,372,276 (“Bernhardsson”)
1009	U.S. Patent No 1,931,698 (“Holzapfel”)
1010	U.S. Patent Pub. No. 2011/0100335A1 (“Parlatore”)
1011	U.S. Patent Pub. No. 2014/0239645 (“Jungmann”)
1012	Kubota DF972-E2 Workshop Manual (“Workshop Manual”)
1013	Kubota DF972-E2 Operator’s Manual (“Operator’s Manual”)
1016	*Auto Fuel Systems*. The Goodheart-Willcox Company. James Duffy and Howard Smith. 1987 (“Duffy”)

1017	DuroMax Manual Next Generation Power Systems
1018	U.S. Patent No. 5,809,979 ("Tsuda")
1019	Oxford Dictionary of Mechanical Engineering, Tony Atkins & Marcel Escudier, 2013.
1020	U.S. Patent No. 9,175,601 ("Markoski")
1021	Tri-Fuel YouTube Video (https://www.youtube.com/watch?v=DpknaAPTQ9U)

16. My opinions are additionally guided by my appreciation and understanding of how a POSA would have understood the claims of the '034 Patent at the time of the earliest possible priority date of the patents, which I understand is June 12, 2015.

IV. SUMMARY OF OPINIONS

17. Based on my experience and expertise, it is my opinion that:

- Claims 1-24 recite nothing more than devices that were already known in the industry prior to the effective filing date of the '034 patent;
- Claims 1-3, 5-9 and 18 are obvious over Nakafushi in view of Olmr;
- Claims 4 and 10 are obvious over Nakafushi in view of Olmr and Duffy;
- Claims 19-23 are obvious over Nakafushi in view of Olmr and Bernhardsson and/or Duffy;
- Claims 11-13 and 16-17 are obvious over Nakafushi in view of Jungmann

and Parlatore;

- Claim 14-15 and 24 is obvious over Nakafushi in view of Jungmann and Parlatore, with Olmr and/or Bernhardsson;
- Claims 1-3, 5-9, 11-14, 17-20, and 22-23 are anticipated by the Kubota DF972 Workshop Manual;
- Claim 4 is obvious over Kubota DF972 Workshop Manual in view of Duffy; and
- Claims 16 and 24 are obvious over the Kubota DF972 Workshop Manual in view of the Tri-Fuel Video and/or Parlatore.

V. UNDERSTANDING OF PATENT LAW

18. I am not an attorney. For purposes of this report, I have an understanding about certain aspects of the law that are relevant to my opinions, as described below.

A. Claim Construction

19. I understand that claim terms must be construed under the *Phillips* standard. Under that standard, words of a claim are given their plain and ordinary meaning as understood by a person of ordinary skill in the art (also "POSA") at the time of invention, in light of the specification and prosecution history, unless those sources show an intent to depart from such meaning, as well as pertinent evidence extrinsic to the patent. For purposes of this declaration, I applied the plain

and ordinary meaning of each term as would have been understood by a person of ordinary skill in art at the time of the alleged invention unless explicitly stated otherwise.

B. Obviousness

20. I understand that a patent claim can be considered to have been obvious to person of ordinary skill in the art at the time the application was filed. This means that, even if all of the elements of a claim are not found in a single prior art reference, the claim is not patentable if the differences between the subject matter in the prior art and the subject matter in the claim would have been obvious to a person of ordinary skill in the art at the time the application was filed.

21. I further understand that a determination of whether a claim would have been obvious must consider several factors, including, among others:

- the level of ordinary skill in the art at the time the application was filed;
- the scope and content of the prior art; and
- what differences, if any, existed between the claimed invention and the prior art.

22. I understand that the teachings of two or more references may be combined in the same way as disclosed in the claims, if such a combination would have been obvious to a person of ordinary skill in the art. In determining whether a combination based on either a single reference or multiple references would have

been obvious, it is appropriate to consider at least the following factors:

- whether the teachings of the prior art references disclose known concepts combined in familiar ways, which, when combined, would yield predictable results;
- whether a person of ordinary skill in the art could implement a predictable variation, and would see the benefit of doing so;
- whether the claimed elements represent one of a limited number of known design choices, and would have a reasonable expectation of success by a person of ordinary skill in the art;
- whether a person of ordinary skill in the art would have recognized a reason to combine known elements in the manner described in the claim;
- whether there is some teaching or suggestion in the prior art to make the modification or combination of elements claimed in the patent; and
- whether the innovation applies a known technique that had been used to improve a similar device or method in a similar way.

23. I understand that a person of ordinary skill in the art has ordinary creativity and is not an automaton.

24. I understand that in considering obviousness, it is important not to determine obviousness using the benefit of hindsight derived from the patent being

considered, and I have not done that in regards to my opinions expressed herein.

25. I understand that certain factors—often called "secondary considerations"—may support or rebut an assertion of obviousness of a claim. I understand that such secondary considerations include, among other things, commercial success of the alleged invention, skepticism of those having ordinary skill in the art at the time of the alleged invention, unexpected results of the alleged invention, any long-felt but unsolved need in the art that was satisfied by the alleged invention, the failure of others to make the alleged invention, praise of the alleged invention by those having ordinary skill in the art, and copying of the alleged invention by others in the field. I further understand that there must be a nexus—a connection—between any such secondary considerations and the alleged invention. I also understand that contemporaneous and independent invention by others is a secondary consideration tending to show obviousness.

C. Anticipation

26. I understand that a patent claim is invalid if it is anticipated by a single item of prior art. I understand that an anticipation analysis involves two steps. First, the patent claims are construed to ascertain their scope. Second, each construed asserted claim is compared to the prior art reference on an element-by-element basis. If the prior art reference discloses or contains each and every element of the claimed invention as arranged in the claim, either expressly or inherently, then it

anticipates the claim.

27. I understand that anticipation by inherent disclosure is appropriate only when a prior art reference necessarily includes or discloses the unstated claim element. I also understand that the discovery of a new or previously unreported or unappreciated property of a prior art composition, or of a scientific explanation for how a prior art composition operates, does not make the prior art composition patentably new to the entity or person that discovered the new property or mode of operation. I further understand that there is no requirement that a POSA would have recognized the inherent disclosure at the time of the invention.

28. For anticipation by a prior art publication or document, I understand that the reference's description must enable a POSA to practice the claimed invention without undue experimentation. I further understand that the following factors may be considered to determine whether any experimentation would have been undue:

- The quantity of experimentation necessary.
- The amount of direction or guidance presented.
- The presence or absence of working examples.
- The nature of the claimed invention.
- The state of the prior art.
- The relative skill of those in the art.

- The predictability or unpredictability of the art.
- The breadth of the claims.

VI. THE PERSON OF ORDINARY SKILL IN THE ART

29. I understand that there are multiple factors relevant to determining the level of ordinary skill in the pertinent art, including the educational level of active workers in the field at the time of the alleged invention, the sophistication of the technology, the type of problems encountered in the art, and the prior art solutions to those problems.

30. In determining the characteristics of a hypothetical person of ordinary skill in the art of the ’034 Patent at the time of the claimed invention, I considered several things, including the type of problems encountered in this field, and the rapidity with which innovations were made. I also considered the sophistication of the technology involved, and the educational background and experience of those actively working in the field, and the level of education that would be necessary to understand the ’034 patent. Finally, I placed myself back in the relevant period of time and considered the state of the art and the level of skill of the persons working in this field at that time.

31. It is my opinion that the subject matter of the ’034 Patent focuses on the fuel-delivery system(s), such as a carburetor and/or gaseous fuel regulator, for a dual-fuel engine or generator. Based on the materials I have considered

(including the prior art cited herein), my own knowledge and experience, and the level of skill required to design and build a dual-fuel carburetor, I have come to the conclusion that a person of ordinary skill in the art of the ’034 Patent would hold a bachelor’s-level or equivalent degree in mechanical engineering, physics, or related fields and have three years of work experience in combustion engines operating on various fuel sources such as liquid fuels and gaseous fuels. This hypothetical person would be capable of performing various design tasks and would understand the basic mechanical features and operation of carburetors, regulators, engines, and generators; this hypothetical person would also have an appreciation for carburetors, regulators, engines, and generators and issues and concerns faced by users/operators that use the same. There are also basic engineering principles that the person of ordinary skill in the art would appreciate, as I discuss in Section VII below. I believe these understandings are demonstrated, for example, by the prior art I discuss herein. A person could also have qualified as a person of ordinary skill in the art with some combination of (1) more formal education (*e.g.*, an M.S. degree) and less technical experience or (2) less formal education and more technical or professional experience in the fields listed above. For example, a person having significant experience servicing or operating dual-fuel combustion engines, or incorporating such engines into finished products (e.g., lawnmowers, lifts, floor cleaners, or the like), would qualify as a POSA.

32. Although my qualifications and experience exceed those of the hypothetical person having an ordinary level of skill in the art, my analysis and conclusions herein are from the perspective of a person of ordinary skill in the art as of June 12, 2015 (which I understand to be the earliest possible priority date for the claims of the ’034 Patent), unless otherwise noted.

VII. STATE OF THE ART

A. Carburetors

33. A carburetor is a device that supplies an air-fuel mixture to a spark-ignition engine. The diagram below shows a carburetor’s basic elements.

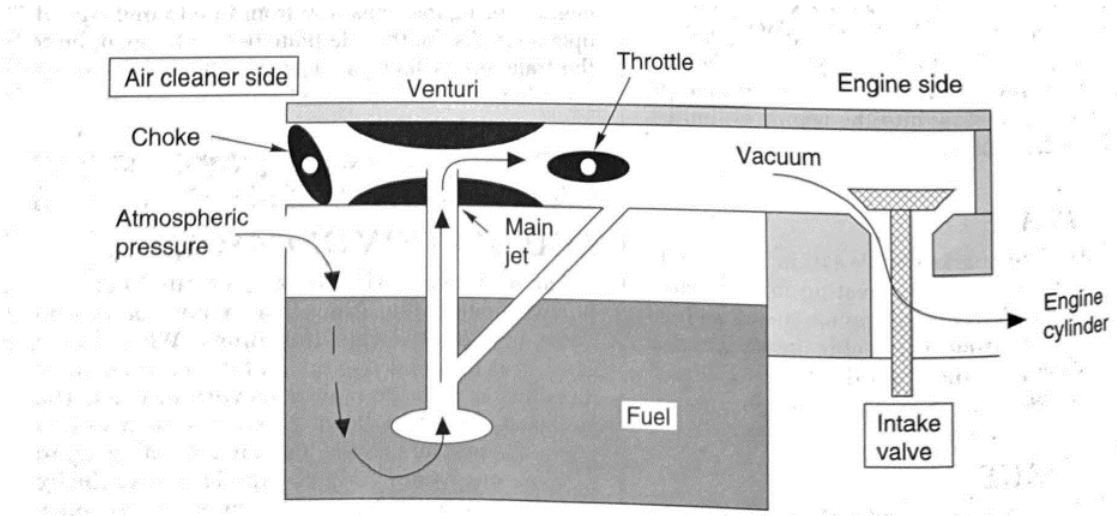

Fig. 4-7 Choke system. (*Courtesy of William A. Schuster*)

Ex. 1006, 8.

34. A carburetor is a device that is commonly used to control the mixture of fuel and air delivered to an engine. A carburetor induces air flow through a

venturi, which comprises a shape that is wider at the ends and narrower in the middle. When air flows through the venturi, the velocity increases and the pressure decreases in the narrow portion (due to the "Venturi effect"), which pulls fuel from the carburetor float bowl/chamber and mixes it with the flowing air. The in-flow of air through the venturi is controlled by the choke, while outflow of the air/fuel mixture to the engine is controlled with the throttle. The choke and throttle allow for the control of the air-fuel ratio and the total amount of air and fuel that flow to the engine.

B. Multi-Fuel Combustion Engines

35. Multi-fuel engines that can alternate between running on liquid or gaseous fuel have been known in the art for nearly 100 years. For example, U.S. Patent No. 1,931,698 ("Holzapfel") was filed in 1931 and discloses "a fuel system embodying the supplying of liquid fuel and gaseous fuel to an engine in alternation at will." Ex. 1009, 1:3-5. Holzapfel further shows that the disclosed engine "provide[s] a fuel system . . . in which the liquid fuel supply may be cut off and the gaseous fuel supply turned on, or vice versa so that when the liquid fuel is employed the gaseous fuel is disconnected and while the gaseous fuel is employed the liquid fuel is disconnected." *Id*., 1:35-42. Holzapfel further says that a "rod or wire 47" is connected to gaseous and liquid cutoff valves to control both valves, as seen in Holzapfel's Figures 1 and 2 (annotations added) below:

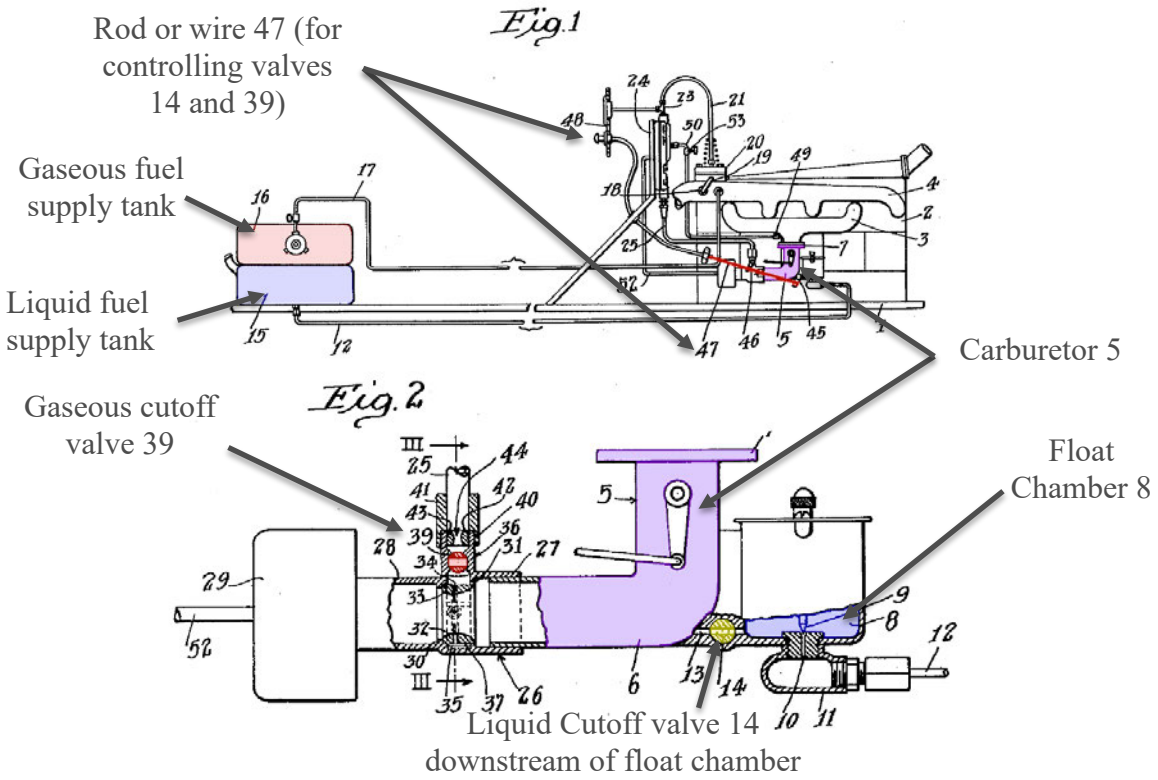

36. Notably, in addition to operating alternatively on liquid and gaseous fuel, Holzapfel's liquid cutoff is located downstream from the carburetor float chamber. *Id.*, 1:100-107, Fig. 2.

C. Switches and Solenoids

37. A solenoid valve is a type of electro-mechanical valve. It uses a wire coil to generate a magnetic field when the coil is energized, which can be controlled by an electrical switch. The magnetic field moves a piston to change the position of the valve for opening and closing the valve. Solenoid valves are widely used in a range of fluid control applications, including the control of fuel in an engine. In carbureted engines, solenoid valves are commonly located between the float chamber and the venturi to control the flow of fuel or to cut off the flow of

fuel, and have been so-used for decades. *See e.g.*, Ex. 1007, Fig. 2, 1:33-48; Ex. 1016, 4-13.

VIII. SUMMARY OF THE ’034 PATENT

A. The ’034 Patent

38. The ’034 Patent discloses multi-fuel internal combustion engines/generators operable on liquid or gaseous fuels. Ex. 1001, 1:16–20. The ’034 Patent acknowledges that multi-fuel combustion engines typically run on liquid fuel (such as gasoline) and gaseous fuels (such as propane), recognizing that gaseous fuels can reduce emissions, may be easier to store, and degrade more slowly than traditional liquid gasoline. *Id*., 1:21–49. Figure 1 (annotations added) discloses a perspective view of a generator with such an engine:

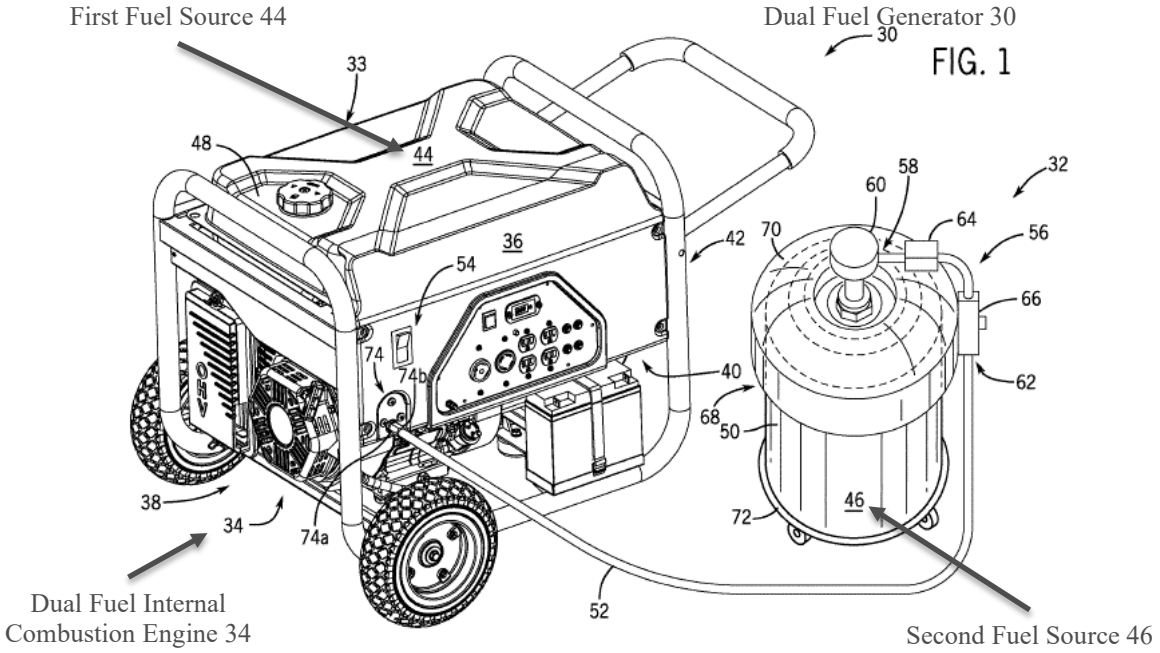

39. The ’034 Patent states that switching between fuel sources in conventional multi-fuel combustion engines can result in an overly rich fuel-air ratio and unstable operating conditions because it is difficult to completely shut off one fuel source before starting the alternative fuel source, resulting in a mixture that temporarily includes fuel from both the liquid and gaseous fuel sources. *Id*., 1:56–2:6. The ’034 Patent purports to solve this problem by implementing a switch that powers cutoff solenoids that control the flow of fuel from the liquid and gaseous fuel sources. *Id*., 2:15–23. The ’034 Patent also teaches that a cutoff solenoid can be located downstream of the float bowl in the carburetor to prevent excess gasoline from passing to the engine, as depicted in Figure 4:

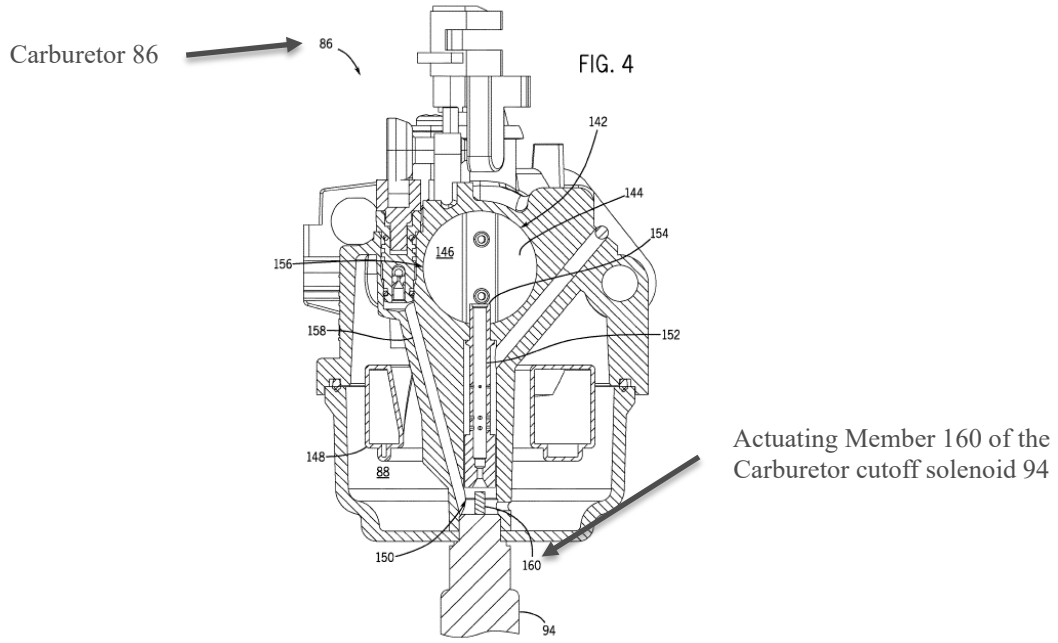

Id., 11:55–59 (annotations added).

40. The ’034 Patent further teaches that two pressure regulators in the

gaseous fuel line can be used—one coupled to the gaseous fuel source, and the other further downstream to regulate the gaseous fuel pressure for delivery to the engine, as exemplified in Figure 1:

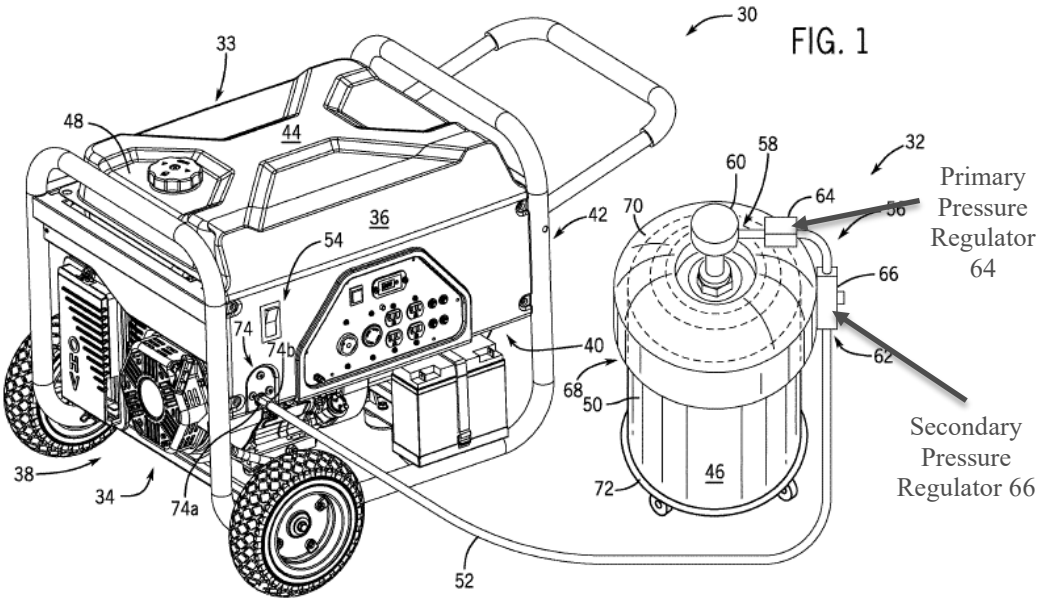

Id., 4:7-45 (annotations added).

B. Prosecution History

41. The ’034 Patent is part of a family that includes twelve (12) U.S. patents and/or pending applications.[1] The ’034 Patent issued from U.S. Application No. 15/285,215 (“the ’215 Application”), which was filed on October 4, 2016, and claims priority to two applications: U.S. Application No. 14/925,441

[1] Other family members include U.S. Patent App. Nos. 14/738,060, 14/925,441, 15/332,264, 16/946,438, 15/285,215, 16/358,822, 16/946,439, 16/783,455, 17/937,046, 18/183,734, and 18/443,487.

("the '441 Application"), which was filed on October 28, 2015; and U.S. Application No. 14/738,060 ("the '060 Application"), which was filed on June 12, 2015. The '215 Application was a continuation-in-part of the '441 Application, which was, in turn, a continuation-in-part of the '060 Application. For purposes of this Declaration only I will treat the earliest priority date of the '034 Patent as June 12, 2015, the filing date of the earliest application in the priority chain.

42. The '034 Patent's prosecution history includes multiple rejections and amendments. The Examiner primarily relied on U.S. Patent No. 4,489,669 ("Poehlman"), U.S. Publication No. 2004/0139943 ("Kern") and U.S. Patent No. 5,450,832 ("Graf") to reject the pending claims, prior to allowing the '034 Patent after the Applicant made several amendments. Ex. 1002, 25-32, 35-40, 68-105, 119-135, 221-237.

1. Distinguishing Poehlman's Liquid and Gaseous Cutoff Solenoids

43. The Examiner asserted that, *inter alia*, Poehlman disclosed liquid and gaseous cutoff solenoids (Ex. 1002, 142-145), but Applicant argued that Poehlman did not disclose valves that are *solenoids*:

> There is no disclosure in Poehlman that the liquid fuel control valve 43 and gaseous fuel control valve 45 are ***solenoids*** that are coupled to open and close a liquid fuel path to the engine and coupled to open and close a gaseous fuel source to the engine, as called for in claim 1.

Id., 73-74 (emphasis in original).

44. Ultimately agreeing with the Applicant, the Examiner thereafter claimed the use of solenoids in Poehlman would have been obvious in view of Walker (U.S. Patent No. 4,489,699), which discloses "a similar multi-fuel engine in which the liquid and gaseous fuel lines comprise a control valve 85 being energized by a solenoid 84 to control the flow of gasoline; and a control valve 99 energized by a solenoid 98 to control the gaseous fuel flow." *Id*., 47. The Examiner concluded it would have been obvious to combine Poehlman with Walker because doing so would "minimize the connective elements of an electromechanical control for each fuel cutoff . . . ." *Id*., 48.

45. In a final amendment, the Applicant added limitations specifying the location of the liquid cutoff solenoid as "downstream from the float bowl" and/or "within the carburetor" as shown below:

1. (Currently Amended) A multi-fuel engine comprising:

an engine operable on a liquid fuel and a gaseous fuel;

a carburetor attached to an intake of the engine to mix air and fuel and connect a liquid fuel source to the intake, the carburetor comprising a float bowl;

a liquid cutoff solenoid coupled to the carburetor to open and close a liquid fuel path to the engine downstream from the float bowl;

a gaseous cutoff ~~solenoid~~ coupled to open and close a gaseous fuel source to the engine; and

a switch selectively coupling a power source to the liquid cutoff solenoid to open and close the liquid fuel path ~~and the gaseous cutoff solenoid to switch between fuel sources on-the-fly during engine operation~~.

20. (Currently Amended) A multi-fuel internal combustion engine comprising:

an engine operable on liquid fuel supplied through a liquid fuel line from a liquid fuel source and gaseous fuel supplied through a gaseous fuel line from a pressurized fuel source;

a carburetor coupled to an intake of the engine to mix air and fuel and connect to the liquid fuel line and the gaseous fuel line;

~~a switch to change operation of the engine from liquid fuel to gaseous fuel and from gaseous fuel to liquid fuel while the engine is running;~~

a ~~liquid fuel~~carburetor cutoff solenoid coupled to control fuel flow within the carburetor from ~~through~~ the liquid fuel line and selectively engage engine operation on liquid fuel; ~~upon actuation of the switch from gaseous fuel to liquid fuel;~~ and

a gaseous fuel ~~cutoff solenoid~~valve coupled to control fuel flow through the gaseous fuel line and selectively engage engine operation on gaseous fuel ~~upon actuation of the switch from liquid fuel to gaseous fuel~~.

Id., 28, 30-31.

46. The Examiner allowed these amended claims (which issued as Claims 1 and 18), reasoning:

> The Amendment overcomes the prior art rejection because neither Poehlman nor Walker teaches a liquid cutoff solenoid ***coupled to the carburetor downstream from the float bowl***, as well as a switch to selectively couple a power source to the liquid cutoff solenoid to open and close the liquid fuel path. No other reference teaches this structure. Therefore, the multi-fuel engine with a carburetor as claimed is considered a novel approach to

> utilizing two or more fuels via a selective switch and liquid cutoff solenoid valve.

Id., 16 (emphasis added).

2. Distinguishing Kern and Graff's Pressure Regulators

47. The Examiner asserted that Kern taught the claimed engine/generator arrangement and relied on Graf as teaching the remaining elements of pending claim 13, which included "primary" and "secondary" pressure regulators:

> In addition, Graf teaches a fuel regulator system comprising: a primary pressure regulator (23) coupled to a service valve (3) of the pressurized fuel source to regulate fuel supplied from the pressurized fuel source to a reduced pressure, and a secondary pressure regulator (24) coupled to the primary pressure regulator to regulate fuel supplied from the primary pressure regulator to a desired pressure for delivery through the gaseous fuel line to operate the engine.
>
> Therefore, it would have been obvious to one of ordinary skill in the art at the time of the invention to provide the fuel regulator system of Graf in the engine of Poehlman in order to control the amount of fuel being metered to the engine based on engine operating conditions to improve fuel economy.

Id., 276.

48. The Applicant distinguished Graf as not disclosing (1) a primary pressure regulator and (2) an electro-mechanical valve system… that controls fuel

flow to the engine *from the liquid fuel source* and the pressurized fuel source." *Id*., 91. The Examiner ultimately allowed this claim, which issued as Claim 11.

IX. LEVEL OF ORDINARY SKILL IN THE ART

49. I understand that a person of ordinary skill in the art (hereinafter "POSA") would be aware of all the pertinent prior art at the time of the alleged invention. I further understand that a POSA is a person of ordinary creativity and thus is able to make inferences from the art.

50. For purposes of this IPR, I apply the level of skill in the art as possessed by the POSA I described previously in paragraph 31 above.

X. CLAIM CONSTRUCTION

51. I have not identified any claim terms that need an express construction in order to address the issues raised herein, but reserve the right to respond to any constructions offered by Patent Owner, its expert(s), and/or the Board. I have therefore applied the plain and ordinary meaning of the claim terms in this declaration.

XI. OVERVIEW OF ASSERTED PRIOR ART

A. JPS61283734A ("Nakafushi") (Ex. 1004/1005)

52. Nakafushi discloses an engine that can alternatively use gasoline or

liquid petroleum gas ("LPG")[2] as fuel. Ex. 1005, ¶[0001]. Nakafushi identifies two problems to be solved by the invention. First, Nakafushi points out that when such an engine operating on gasoline is switched to LPG, a residual amount of gasoline remains in the float chamber (i.e., float bowl), and is sucked into the intake passage and mixed with the LPG, thus resulting in an over-rich air-to-fuel ratio. *Id*., ¶¶[0003]-[0004]. Second, because the residual gasoline is drained from the float chamber during this switching operation, when the engine is switched back to gasoline, gasoline delivery is delayed until the level of gasoline in the float chamber recovers. *Id*., ¶[0004]. During this delay, the air-to-fuel ratio becomes over-lean. *Id*. Nakafushi solves these problems by including a control valve 23 ***downstream of the float chamber*** to prevent the float chamber from being emptied of gasoline when switching to LPG operation. *Id*., ¶¶[0006]-[0007] (emphasis added).

53. Specifically, as seen in annotated Figure 1 below, Nakafushi discloses a carburetor 1 with an intake passage I:

[2] LPG is a general term for a group of hydrocarbon gases that are stored as liquids under pressure. LPG typically includes propane, butane, or a mix of both.

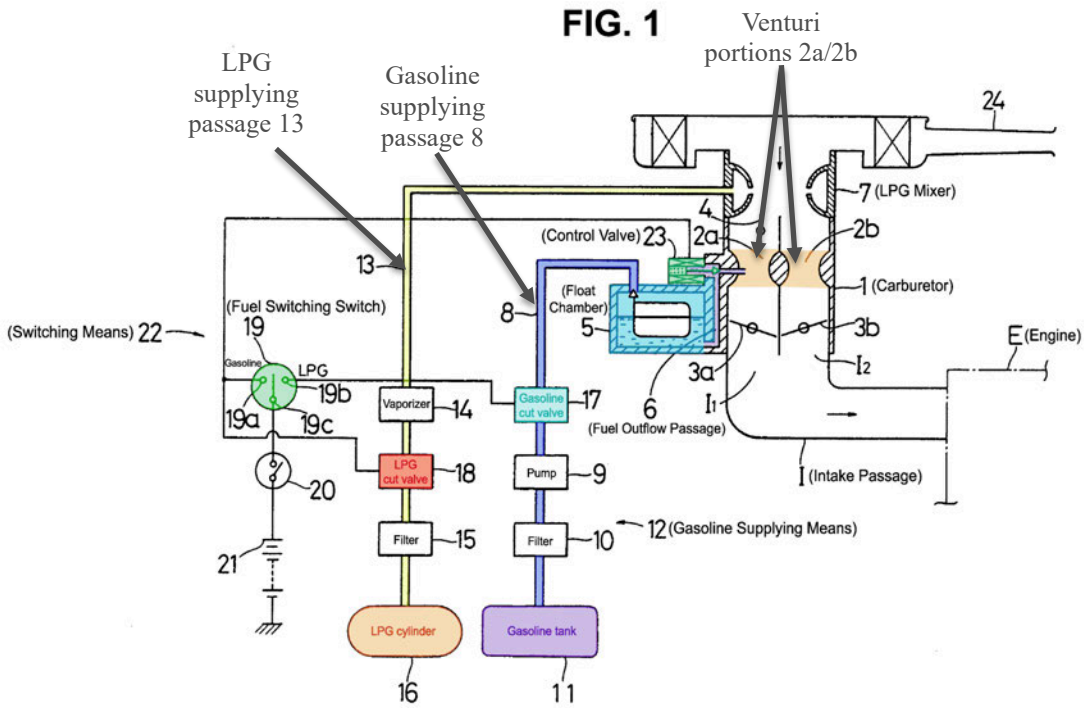

Id., ¶[0010], Fig. 1 (coloring and annotations added).

54. The intake passage I has a primary intake passage I_1 and a secondary intake passage I_2, with Venturi portions 2a and 2b, respectively. *Id*. Gasoline is stored in a gasoline tank 11 and pumped to a float chamber 5 through a gasoline supply passage 8. *Id.,* ¶[0012]. Gasoline cut valve 17 opens and closes the gasoline supply passage 8. *Id*., ¶[0013]. Gasoline in the float chamber 5 is sucked into the Venturi portions 2a and 2b through a fuel outflow passage 6. *Id*., ¶[0010]. Control valve 23 opens and closes the fuel outflow passage 6, thus controlling gasoline flow downstream from the float chamber 5 to the intake I. *Id*., ¶[0014].

55. Separately, LPG is stored in cylinder 16, and travels to an LPG mixer 7 in the intake I through LPG supply passage 13. *Id*., ¶¶[0011]-[0012]. Similar to

the gasoline supply passage 8, the LPG supply passage 13 has an LPG cut valve 18 to open and close the LPG supply passage 13. *Id*., ¶[0013].

56. Nakafushi discloses a fuel switching switch 19 that controls which fuel, gasoline or LPG, is fed to the engine. *Id*., ¶¶[0013]-[0014]. When switch 19 is set to the gasoline side contact 19a: (1) a cut signal is sent to the LPG cut valve 18 to block the LPG supply to the LPG mixer 7; (2) gasoline cut valve 17 opens to allow the flow of gasoline from the gasoline tank 11 to the float chamber; and (3) control valve 23 opens to allow gasoline to flow from the float chamber to the intake I. *Id*.

57. Conversely, when the switch 19 is set to the LPG side contact 19b: (1) a cut signal is sent to the gasoline cut valve 17 to block the flow of gasoline from tank 11 to the float chamber; (2) control valve 23 is closed, thereby blocking gasoline flow from the float chamber to the intake I; and (3) the LPG cut valve 18 is opened, allowing LPG to flow from the LPG cylinder 16 to the LPG mixer 7 in the intake I. *Id*.

58. Closing control valve 23, which is downstream of the float chamber, prevents residual gasoline from flowing from the float chamber into the intake I when switching from gasoline to LPG operation. *Id*., ¶[0014], Fig. 1. Conversely, because the gasoline is not drained from the float chamber when switched to LPG as the fuel source, that gasoline is more readily available to flow to the engine upon

switching back to gasoline as the fuel source. *Id*.

59. Nakafushi thus expressly addresses the alleged "problems" identified by the '034 Patent, and discloses the same solution claimed in the '034 Patent some 30 years earlier.

B. U.S. Patent No. 5,301,644 ("Olmr")

60. Olmr (Ex. 1007) is directed to a solenoid valve 42 within the float bowl 30 of the carburetor in an internal combustion engine. Ex. 1007, 1:33-48, 2:30-42, Fig. 2. The purpose of the solenoid valve 42 is to "provide a mechanism for cutting off the supply of fuel to an internal combustion engine when the engine is being stopped" (*id.*, 1:33-37), as seen in Olmr's Figure 2 below:

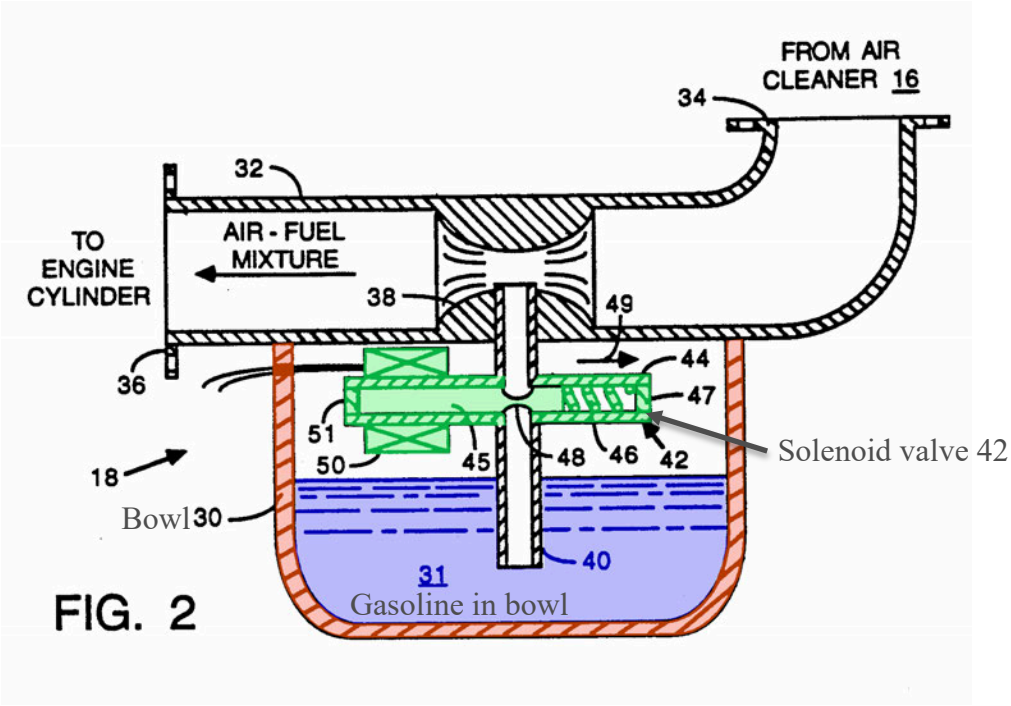

Id., Fig. 2 (coloring and annotations added).

C. U.S. Patent No. 4,372,276 ("Bernhardsson")

61. Bernhardsson (Ex. 1008) is directed to an arrangement for switching a carburetor in an internal combustion engine for alternative operation using liquid fuel (e.g., gasoline) or gaseous fuel (e.g., LPG). Ex. 1008, 1:6-21 (referring to gasoline as "petrol" and LPG as "LP gas"). Bernhardsson discloses solenoid valves 19 and 42 for regulating the flow of gasoline and LPG to the carburetor, as seen in Bernhardsson's Figure 1:

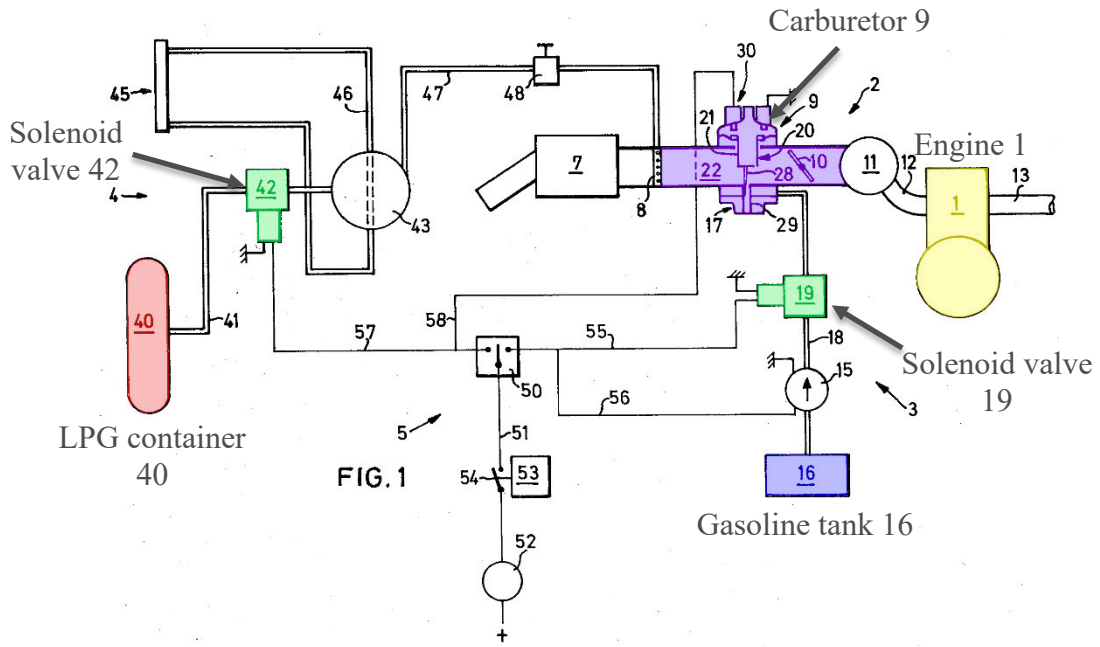

Id., Fig. 1 (coloring and annotations added).

62. Bernhardsson thus discloses the use of a liquid and gaseous cutoff solenoids for cutting liquid and gas fuel flow, more than 30 years before the '034 Patent. *Id.*

D. U.S. Patent Pub. No. 2011/0100335A1 ("Parlatore")

63. Parlatore (Ex. 1010) is directed to a fuel delivery system that includes a propane tank, a first regulator coupled to the tank, and a second regulator connected to the first regulator, as depicted in Parlatore's Figures 1 and 3:

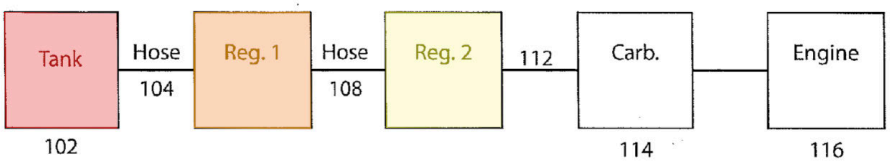

Fig. 1

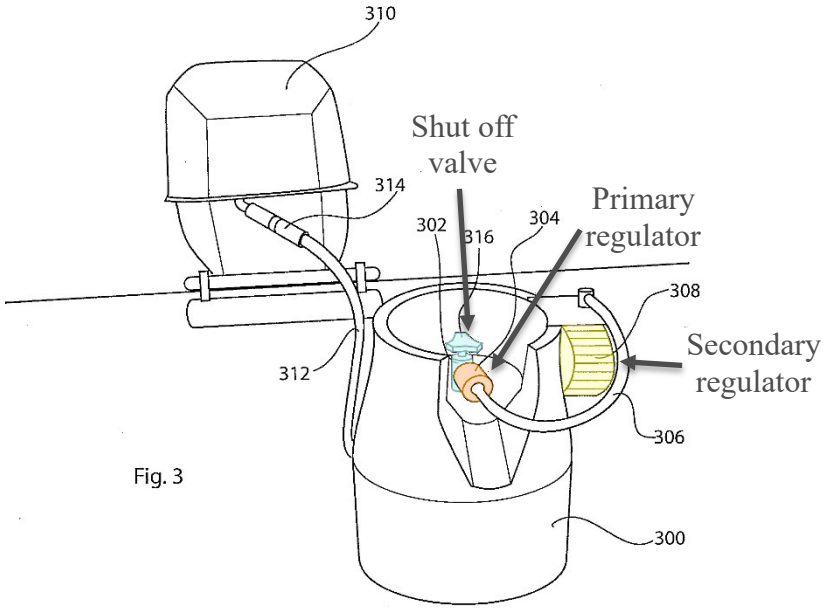

Fig. 3

Ex. 1010, ¶¶[0005]-[0006], Figs. 1, 3 (coloring and annotations added).

64. Parlatore thus discloses the use of primary and secondary pressure regulators, positioned at/near the LPG tank and remote from the engine/generator, to regulate propane delivery to an engine/generator, as later claimed in the '034

Patent.

E. U.S. Patent Pub. No. 2014/0239645 ("Jungmann")

65. Jungmann (Ex. 1011) is directed to a generator that includes an internal combustion engine. Ex. 1011, Abstract. Specifically, Jungmann teaches a "generator including an enclosure, an internal combustion engine provided within the enclosure, an alternator provided within the enclosure and driven by the internal combustion engine, a fuel supply line for providing fuel to the internal combustion engine, a valve for selectively closing the fuel supply line, . . . [and] a controller configured to provide a signal to maintain the valve in an open position," as seen in Figure 3:

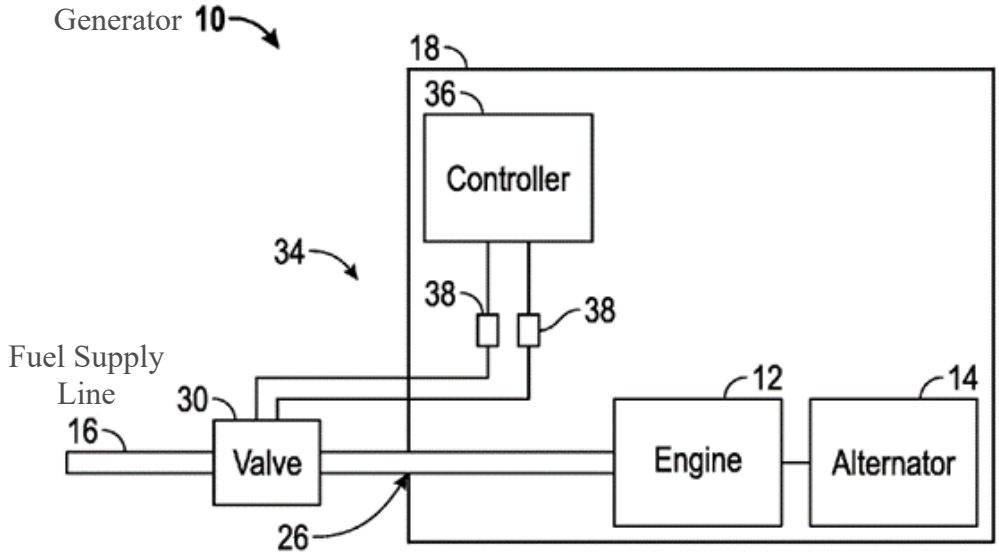

FIG. 3

Id., ¶[0002], Fig. 3 (annotations added). Jungmann discloses the use of different fuels including gaseous fuels (propane, natural gas) and liquid fuels (gasoline,

diesel). *Id.*, ¶[0015]. Jungmann thus discloses using an engine that uses liquid or gaseous fuels in a generator.

F. Kubota DF972 Workshop Manual ("Workshop Manual")

66. The Workshop Manual (Ex. 1012) discloses servicing, maintenance, and troubleshooting instructions for Kubota's gasoline (WG972), dual-fuel gasoline/LPG (DF972), and natural gas (DG972) engines/generators. I will focus on the disclosures relating to the dual-fuel model (DF972) here. The DF972-E2 engine/generator is designed to operate on both gasoline and LPG. Note that the Workshop Manual refers to both LPG and propane. *See e.g.* Ex. 1012, 65. LPG is mostly propane with small amounts of other hydrocarbons. (The Workshop manual refers to Gas Processors Association standards which specify >90% propane in LPG. *Id*., 10.) Thus, a POSA would understand that the use of "LPG" and "propane" as used in the Workshop Manual refer to the same thing for purposes of my opinions herein, i.e. a hydrocarbon fuel that is stored under pressure as a liquid, but ultimately fed to the generator engine as a gas comprising mostly propane.

1. Liquid Fuel Operation

67. With respect to gasoline operation of the DF972, a Gasoline Tank (6) supplies liquid gas to a dual-fuel carburetor via a Gasoline Line (a). A manual shut-off valve (i.e. "Gasoline Cock" (5)) controls the flow of liquid fuel from the gasoline tank to the Carburetor.

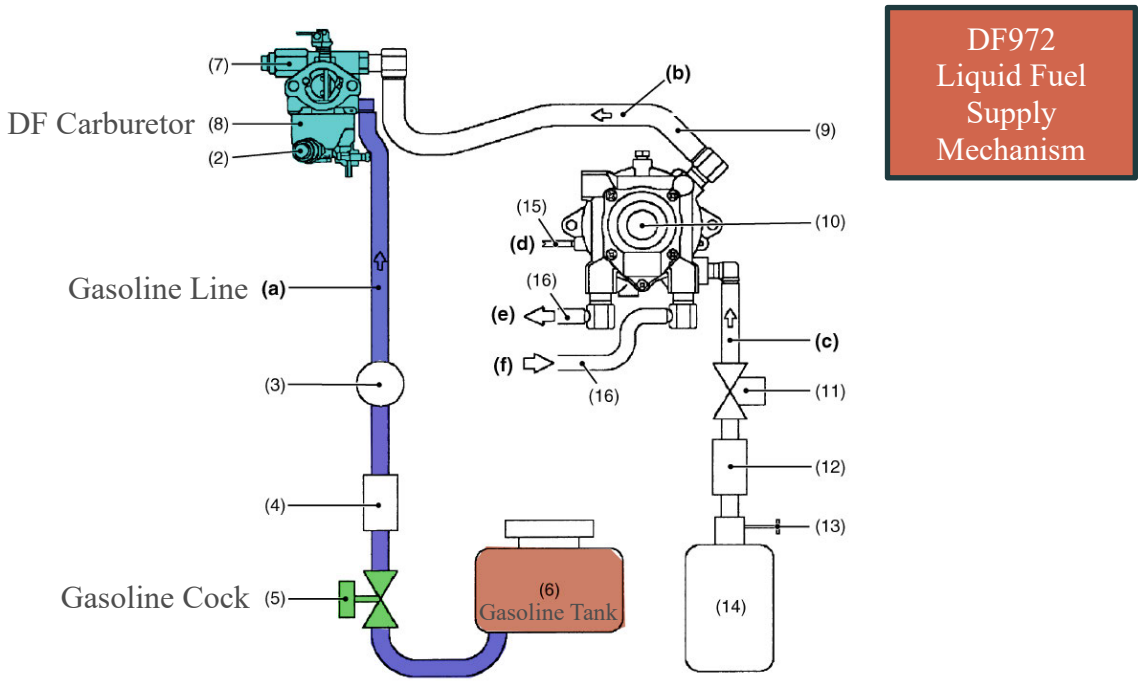

Id., 65 (coloring and annotations added).

68. When the liquid fuel reaches the dual-fuel carburetor, it collects in a float chamber (17). The float (16) regulates the fuel levels in the float chamber (17). The gasoline in the float chamber can pass through to a solenoid valve assembly (9), as shown below:

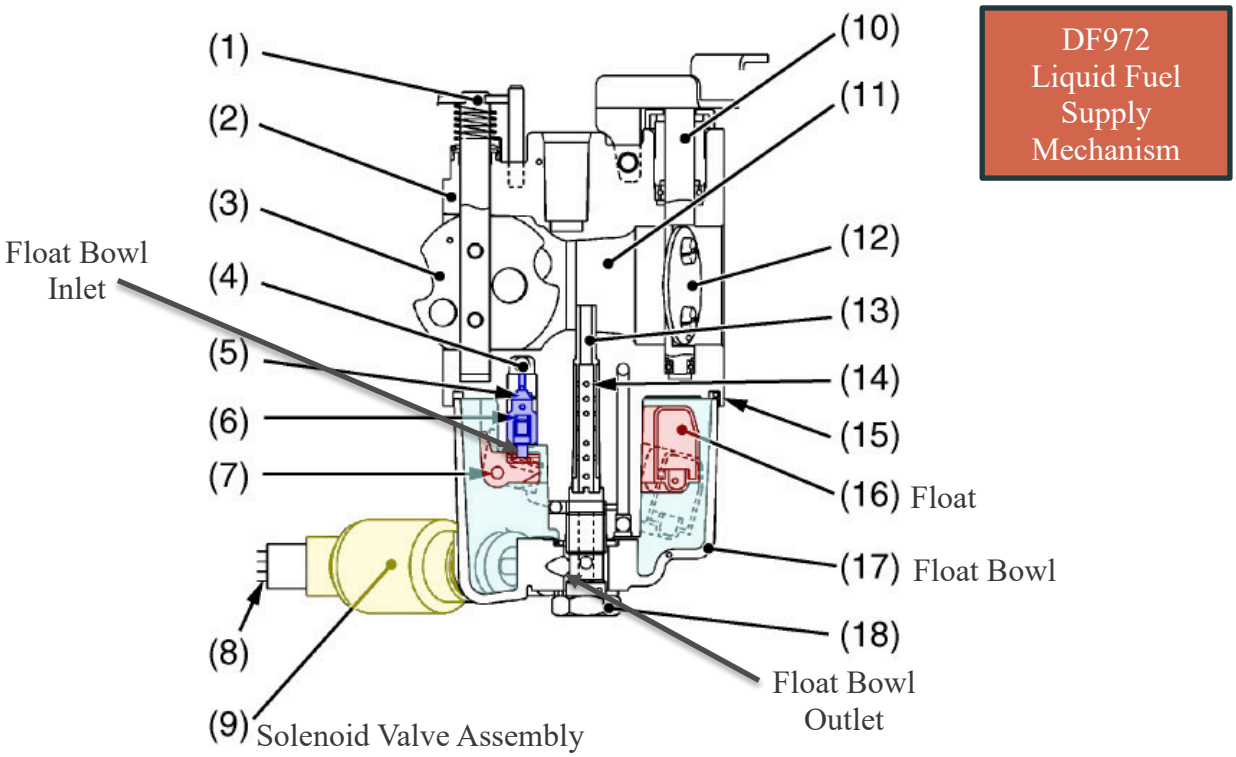

Id., 67 (coloring and annotations added).[3]

69. As seen above, a gasoline cut-off solenoid is positioned between the float chamber and the main jet/nozzle system. When activated (open) for gasoline mode, the gasoline cut-off solenoid valve allows fuel to pass through the main jet into the main nozzle, where it mixes with air in the venturi before entering the engine combustion chamber. When deactivated (closed) for LPG mode or when the engine is off, the gasoline cut-off solenoid blocks gasoline flow, preventing

[3] In the Workshop Manual, the figure corresponds to the WG972-E2 Carburetor. However, the Workshop Manual confirms that the "DF Carburetor operates the same as a gasoline carburetor in gasoline fuel." Ex. 1012, 68.

fuel from reaching the main jet. The general direction of gasoline flow when the gasoline cutoff solenoid is open is illustrated below by the blue arrow:

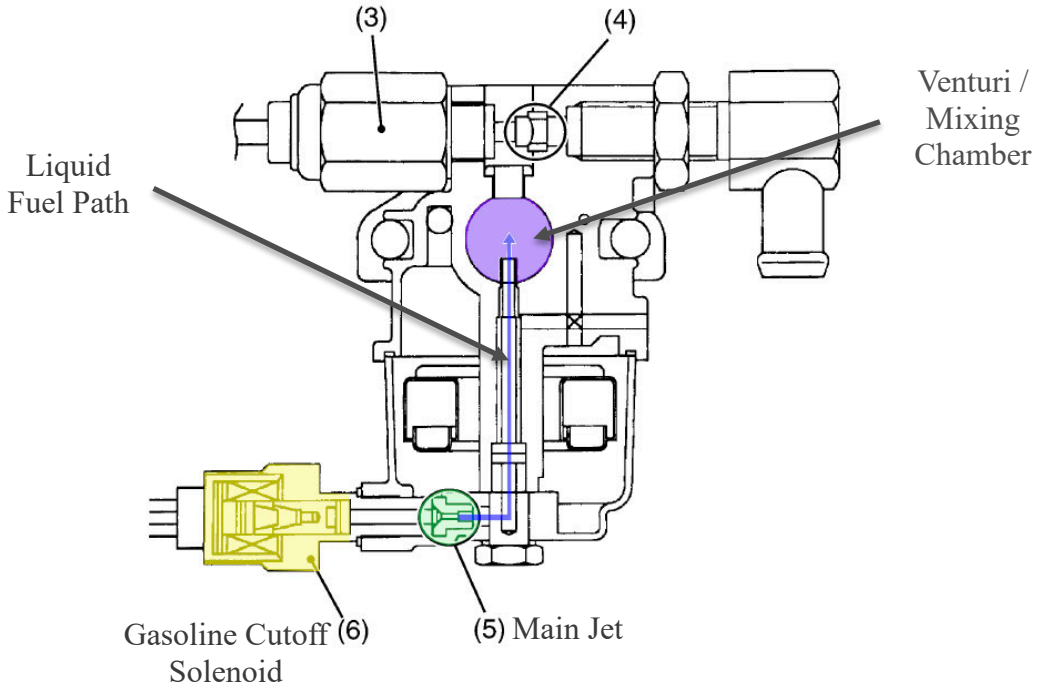

Id., 68 (coloring and annotations added).

2. Gaseous Fuel Operation

70. With respect to operation of the DF972 on gaseous fuel (LPG), an LPG Tank (14) supplies liquid propane to a vaporizer (10) via a Liquid Propane Line (c). The vaporizer converts the liquid LPG into gaseous fuel and supplies the gaseous fuel to the dual-fuel carburetor via a Gaseous Propane Line (b).

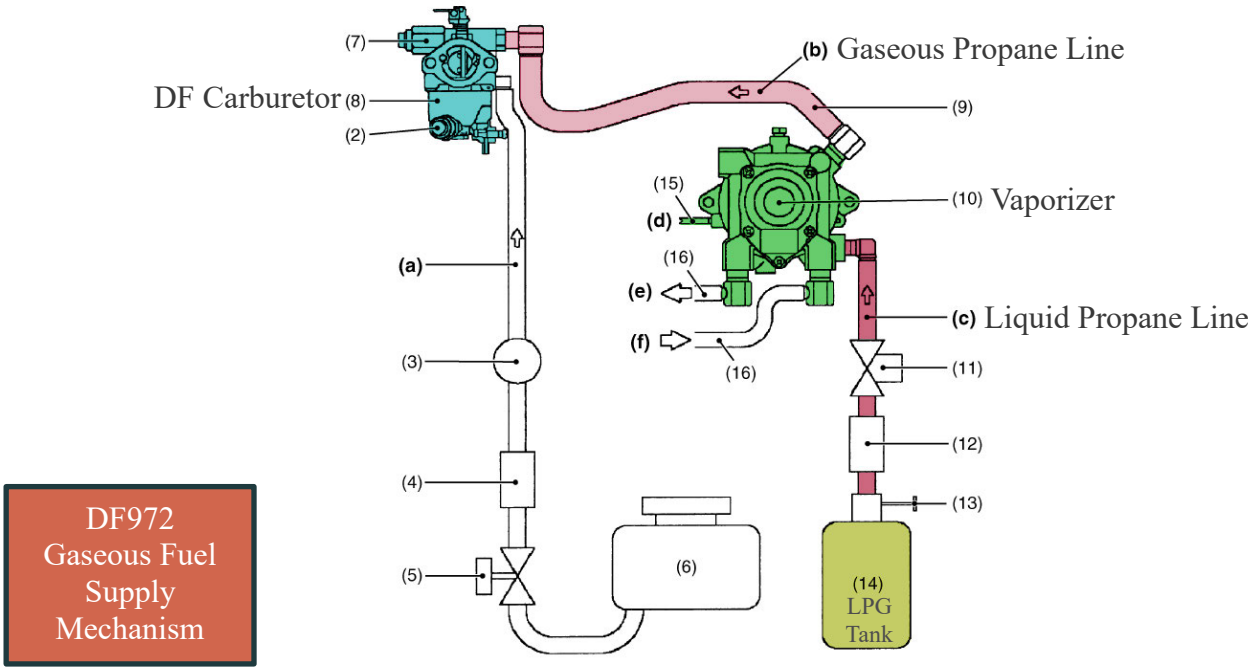

Ex. 1012, 65 (coloring and annotations added).

71. The DF972 vaporizer includes primary and secondary chambers. The primary chamber (3) decompresses (and therefore, evaporates) the liquid LPG. The evaporated LPG then passes to the secondary chamber (1), which is further decompressed such that the gaseous LPG is depressurized to near-atmospheric pressure, as seen below:

DF972
Gaseous Fuel
Supply
Mechanism

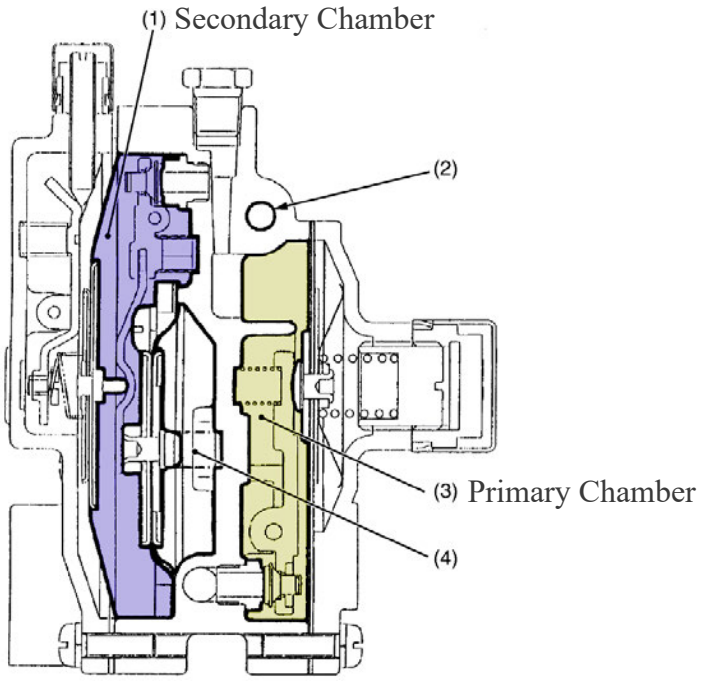

Id., 69 (coloring and annotations added).

72. Downstream from the vaporizer, an LPG cut off solenoid (3) controls the flow of gaseous LPG to the venturi/mixing chamber.

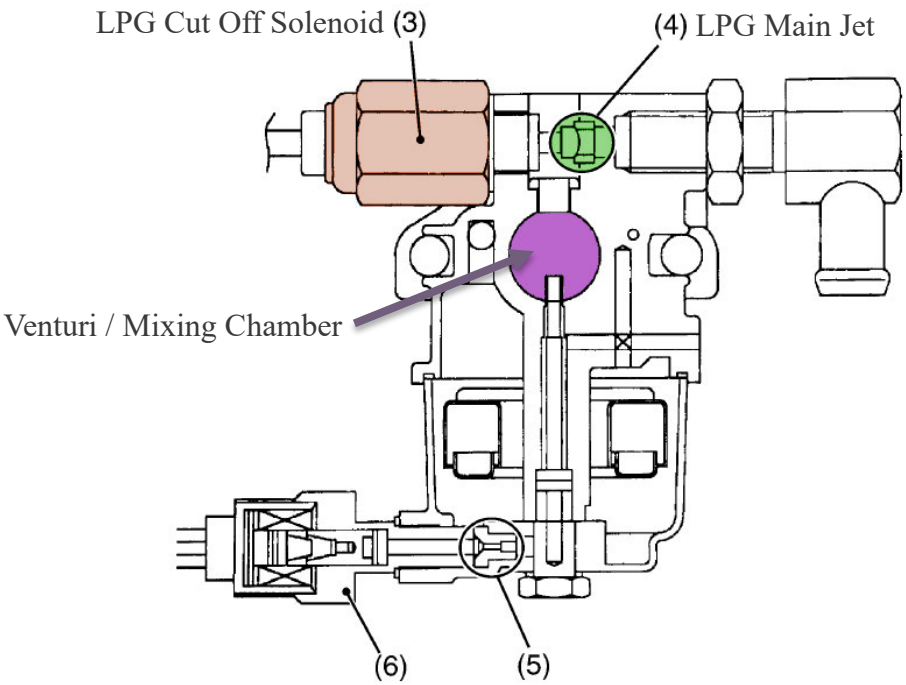

Id., 68 (coloring and annotations added).

3. Switch for Controlling Liquid/Gaseous Fuel Operation

73. The user can operate a fuel select switch (8) to control whether the DF972 engine operates on liquid or gaseous fuel. The engine operates on gasoline fuel when a main switch is in an "ON" position and the fuel select switch (8) is in a "GASOLINE" position (D). When the fuel select switch (8) is turned to an "LPG" position (E), the gasoline fuel flow is shut and instead LPG fuel flows to the mixing chamber. *Id*. The positions D and E of the switch (8) are seen in the depiction below:

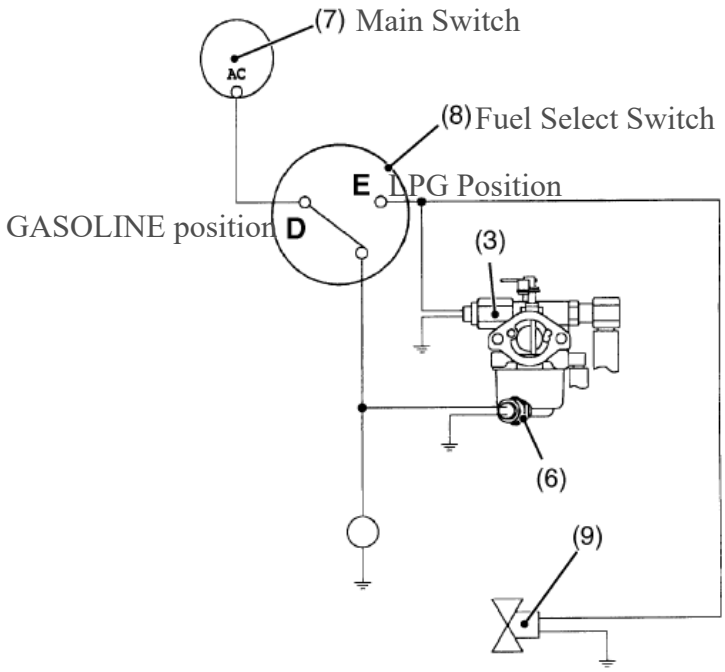

Id. (annotations added)

74. The Workshop Manual thus discloses a dual-fuel engine exhibiting all the limitations of many of the Challenged Claims. *See* §XII.F–H below. Certain aspects of the Kubota DF-972 dual-fuel engine are further shown and explained in Tsuda (Ex. 1018), a patent filed in 1997 and assigned to Kubota.

G. Kubota DF972 Operator's Manual ("Operator's Manual")

75. Kubota also has an Operator's Manual (Ex. 1013) for the Kubota DF972,[4] which teaches how to operate the DF972 engine. In particular, the

[4] I note that the Workshop Manual of Exhibit 1012 is dated 2009, and the Operator's Manual of Exhibit 1013 is dated 2014. While I do not know if Kubota

Operator's Manual specifically discloses that the user may switch between gasoline and LPG "while running the engine." Ex. 1013, 19 (bottom-most bullet item).

H. Tri-Fuel YouTube Video ("Tri-Fuel Video")

76. The Tri-Fuel Video (Ex. 1021) is a YouTube video entitled "Honda Generator Tri-Fuel, EU2000i Triple-Fuel" that was posted by the profile "Mark 'Mark1Jordon1' Kash" on October 2, 2011.

77. The TriFuel YouTube Video discloses a method for modifying a Honda generator to operate on multiple different fuels. The video shows a modified carburetor for use in the Honda generator so that propane or natural gas can be used to fuel the generator as alternatives to gasoline. The man in the video explains that a hole can be drilled in the carburetor and a hose attached to connect propane and/or natural gas fuel sources to alternatively power the generator. *Id*., 0:36–2:00.[5]

---

made any minor changes to the underlying DF972 engine between these years, it is clear that the two manuals cover the same DF972 engine/generator that is relevant to my opinions presented herein. For example, the figure in the Operator's Manual depicting the fuel system (Ex. 1013, 37) shows a near-identical fuel system as that shown in the Workshop Manual (Ex. 1012, 65). A POSA would thus view the disclosures of the Operator's Manual as applicable to the Workshop Manual as relevant to my opinions here, and vice-versa.

[5] Citations to the Tri-Fuel video refer to the time stamp in the video.

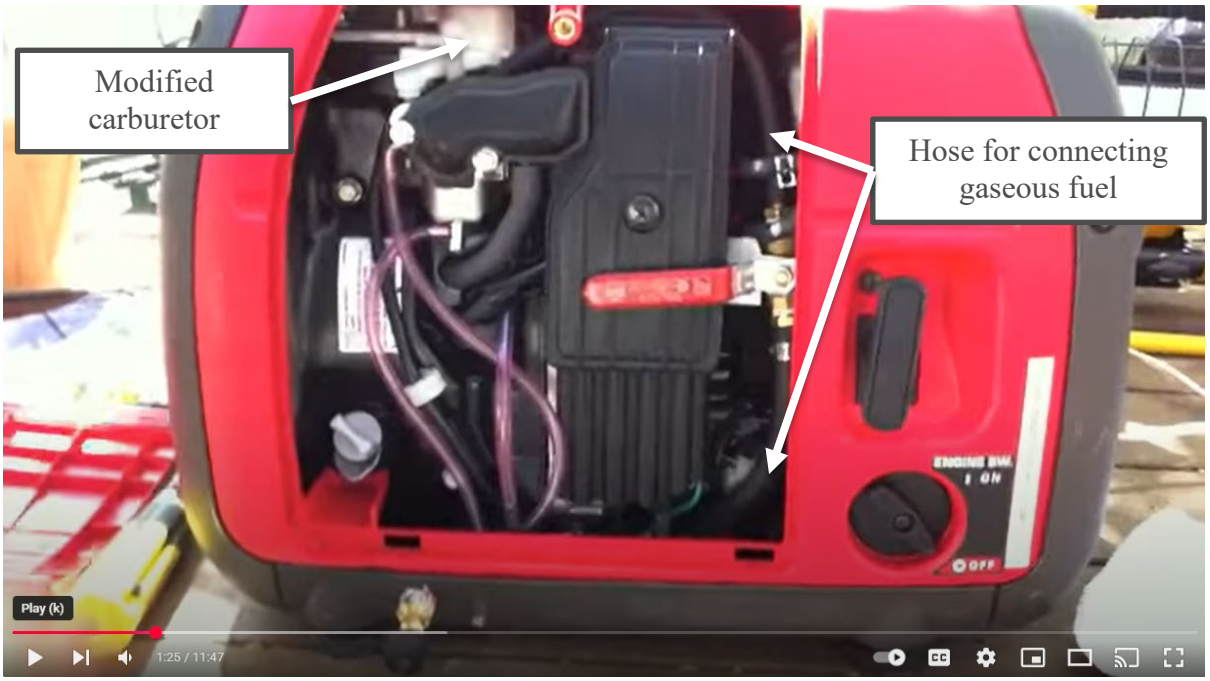

Id., 1:25 (annotations added).

Id., 1:44 (annotation added).

78. The Tri-Fuel Video further shows that a propane tank and regulators are located remotely from the Honda generator, as shown in the screenshot below:

Id., 9:18.

79. The Tri-Fuel Video further explains that two regulators are attached to the propane tank (i.e., located remotely from the generator) to reduce the pressure of the propane in two stages. The first regulator changes "the high pressure of the gas to about ½ psi" and the second regulator further reduces the pressure to -0.5 water column (meaning 0.5 inches of water column below atmospheric pressure). *Id.*, 2:00–3:26.

Id., 3:06.

80. The video then shows a user connecting the propane tank to the Honda generator through a long hose.

Id., 3:39 (annotation added).

81. Thus, the Tri-Fuel Video shows a successful method for modifying a generator to operate on multiple fuel sources by attaching a separate propane tank to a generator, with primary and secondary pressure regulators located at and attached directly to the propane tank (i.e., "off-board" the generator) to manage the pressure of the propane gas delivered to the generator engine.

I. *Auto Fuel Systems*, by Duffy/Smith ("Duffy")

82. Duffy (Ex. 1016) is a textbook published in 1987 "designed to help prepare you to properly diagnose and repair all types of automotive fuel systems." Ex. 1016, 3.

83. Exhibit 1016 consists of excerpts of Duffy that I provided from my personal copy.

84. Duffy explains that computer-controlled "mixture control solenoids" are timed to open and close to control the fuel/air mixture. *Id.*, 11–12. Below is an excerpt from Duffy demonstrating this concept:

Mixture control solenoid

A *mixture control solenoid* in the computer controlled carburetor responds to electrical signals (or dwell signals) from the computer to alter the air-fuel ratio. The signals trigger the solenoid to open and close air and fuel passages in the carburetor. See Fig. 12-44.

Fig. 12-45 shows two other types of mixture control solenoids. Fig. 12-46 illustrates mixture control solenoid action.

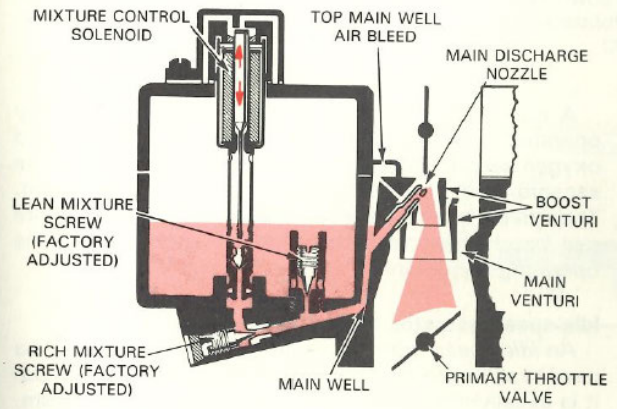

Fig. 12-44. Computer can activate mixture control solenoid in electromechanical carburetor to quickly open or close valve that changes carburetor's air-fuel ratio. Electric pulses from computer move plunger in solenoid. It operates mixture valve. Study how solenoid can regulate fuel flow. (Pontiac)

85. Duffy discloses implementing this logic using circuits and control circuits, as set forth below:

Carburetor control computer

The system computer, usually called the *electronic control unit,* is a small solid-state electronic device. One is shown in Fig. 12-47. This device has both logic circuits (artificial intelligence) and control circuits (power transistors) that are contained in one or more integrated circuit chips.

The electronic control unit (ECU) is capable of receiving information sent to it by sensors located in various places on the automobile. It can process this information and then electronically control the carburetor's mixture control solenoid.

For example, the ECU will receive reports from the oxygen sensor in the exhaust system about the amount of oxygen in the exhaust gas. The ECU, which can do very complicated math in a fraction of a second, compares this signal with the information stored in its memory. If the oxygen makeup of the exhaust gas is not correct, the memory sends a signal to other parts of the ECU. A control signal will then be sent out to the carburetor's mixture solenoid which is energized to adjust the air-fuel mixture for the correct oxygen content in the exhaust gas.

XII. THE CHALLENGED CLAIMS ARE UNPATENTABLE

86. In my opinion, the cited prior art references, alone or in combination, disclose the limitations of the Challenged Claims. Grounds 1–8 are directed to the apparatus collectively addressing Claims 1-24.

A. Ground 1: Claims 1-3, 5-9 and 18 are obvious over Nakafushi in view of Olmr

87. In my opinion, claims 1-3, 5-9 and 18 of the ’034 Patent are obvious for at least the reasons described below.

1. Claim 1

a) Element [1.0]

88. Element [1.0] recites “a multi-fuel engine.” Nakafushi discloses a “multi-fuel engine.” Specifically, Nakafushi discloses an engine that uses both gasoline and LPG.

89. For example, Nakafushi says “[t]he present invention relates to a gasoline-LPG combined engine configured to selectively use gasoline or LPG as fuel.” Ex. 1005, ¶[0001]. A POSA would understand that gasoline and LPG constitute multiple fuels, and therefore that the disclosed engine is a “multi-fuel” engine.

b) Element [1.1]

90. Element [1.1] recites “an engine operable on a liquid fuel and a gaseous fuel.” Nakafushi’s engine selectively uses gasoline or LPG as fuel. *Id*. A

POSA would understand that gasoline is a liquid fuel and that LPG is a gaseous fuel (LPG is most typically stored in a tank under pressure as a liquid, but is decompressed/vaporized and sent into the engine as a gas). *See* ¶¶66, 71 above. The '034 Patent likewise recognizes LPG as a gaseous fuel. Ex. 1001, 3:45–47 ("In one preferred embodiment, the liquid fuel is gasoline and the gaseous fuel is liquid petroleum gas (LPG).").

c) Element [1.2]

91. Element [1.2] requires "a carburetor attached to an intake of the engine to mix air and fuel and connect a liquid fuel source to the intake, the carburetor comprising a float bowl."

92. Element [1.2] describes a generic carburetor, which a POSA would have understood to be devices that attach to an engine intake, and which were designed to mix air and fuel in the correct proportions for combustion in the engine. Carburetors generally connect a liquid fuel source to the engine intake and include a float bowl, which maintains a steady fuel level. Carburetors use the Venturi effect to draw air through a narrowing-then-expanding passage, creating a pressure drop that pulls fuel from the float bowl into the airstream. This mixture of air and fuel is then delivered to the engine's cylinders for combustion, providing the necessary power for operation. *See* §VII.A, above.

93. Nakafushi discloses such a carburetor. Specifically, Nakafushi

discloses a carburetor 1 with venturi portions 2a/2b attached to an engine intake, a liquid fuel source, and a float chamber (i.e. float bowl).

> FIG. 1 shows First Example of the present invention. In this drawing, ***E denotes an engine with a specification of an existing carburetor***, I denotes an intake passage connected to the engine E, and a two-barrel type carburetor 1 is disposed in the intake passage I. Venturi portions 2a and 2b are formed in a primary side intake passage I_1 and a secondary side intake passage I_2 of the carburetor 1, respectively, and throttle valves 3a and 3b are disposed downstream of the Venturi portions 2a and 2b. Furthermore, a choke valve 4 for choking the primary side intake passage I_1. Furthermore, ***5 denotes a float chamber in which gasoline is stored***, and the float chamber 5 is communicated with the Venturi portions 2a and 2b of the carburetor 1 via a fuel outflow passage 6 having a small diameter, so that the gasoline in the float chamber 5 is sucked into the Venturi portions 2a and 2b and atomized and supplied during the operation of the engine E.

Ex. 1005, ¶[0010] (emphasis added). Nakafushi's carburetor, having a float bowl and being attached to the engine intake, is shown below:

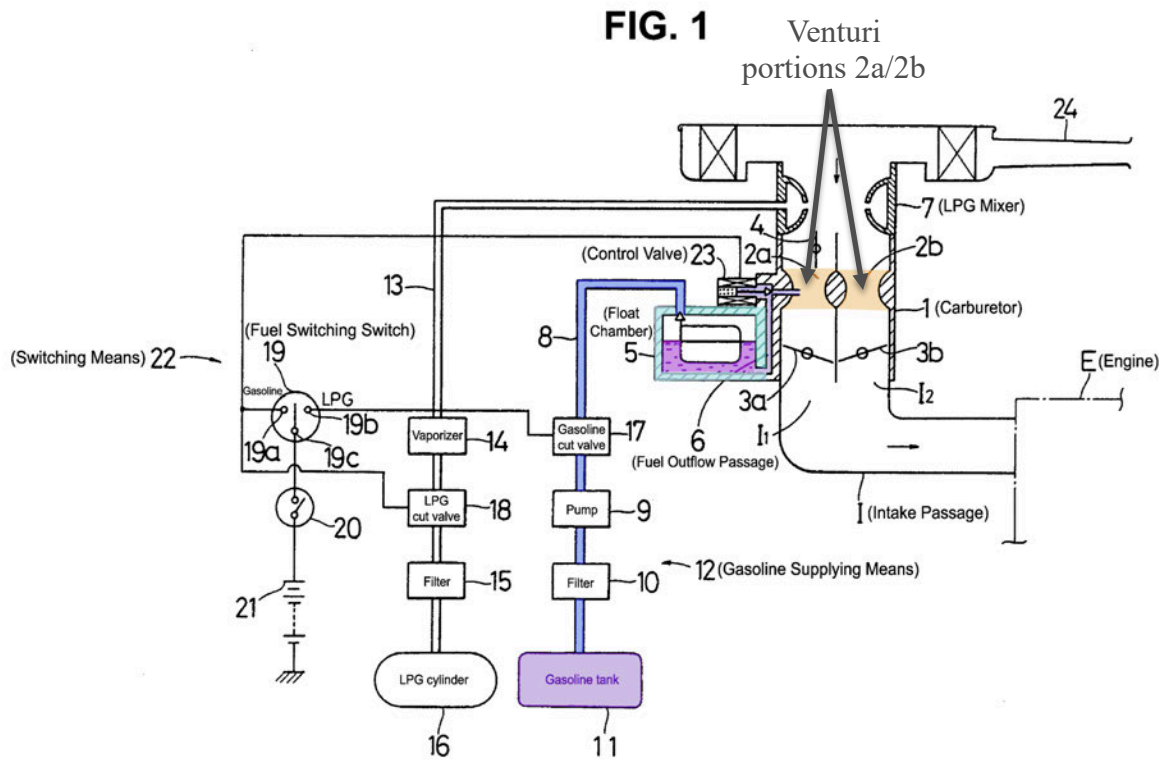

Id., Fig. 1 (coloring and annotations added).

94. Nakafushi also discloses air cleaner 24 through which air flows into carburetor 1 to mix with gasoline or LPG fuel in Venturi portions 2a and 2b:

> Incidentally, 24 refers to an air cleaner mounted on the upper portion of the LPG mixer 7.

Id., ¶[1015].

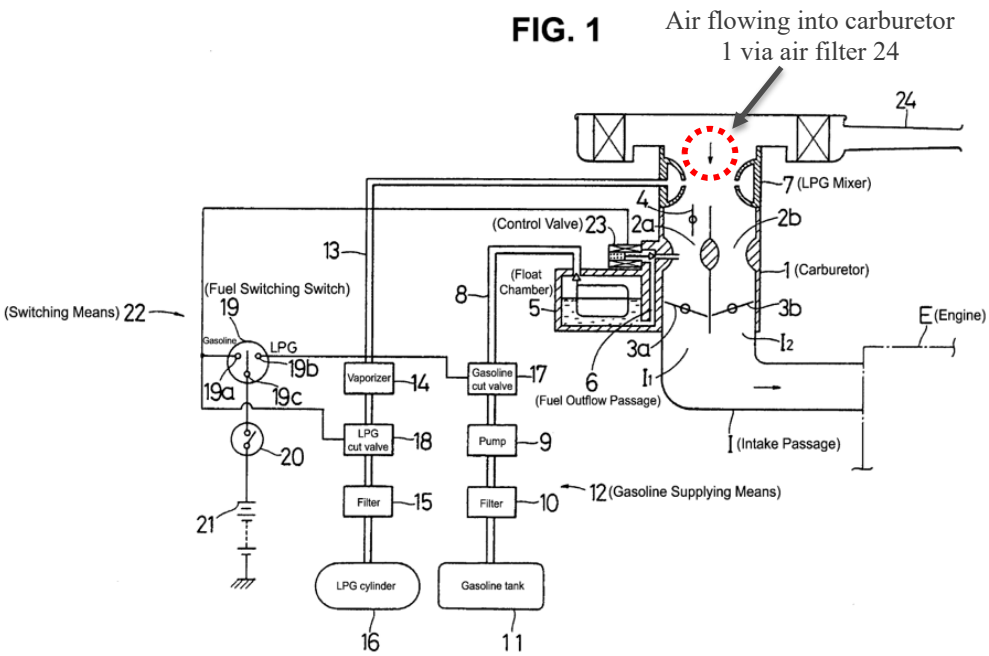

Id., Fig. 1 (annotations added).

95. The gasoline in the float chamber flows to the venturi portions via a fuel outflow passage. The fuel outflow passage has a small diameter, such that gasoline flows through the fuel outflow passage due to the pressure differential created by the air flowing through the venturi portions:

> [T]he float chamber 5 is communicated with the Venturi portions 2a and 2b of the carburetor 1 via a fuel outflow passage 6 having a small diameter, so that the gasoline in the float chamber 5 is sucked into the Venturi portions 2a and 2b and atomized and supplied during the operation of the engine E.

Id., ¶[0010].

96. Nakafushi itself confirms that a POSA would have understood that

the engines such as those it discloses operate by mixing fuel (either gasoline or LPG in the case of Nakafushi) with air prior to combustion in the engine, as confirmed by the numerous references to the "air-fuel ratio" and/or "air/fuel mixture" in regard to gasoline (and/or LPG) being mixed with air:

> However, in this case, even if the supply of gasoline to the float chamber is interrupted in order to switch from the gasoline engine operation state to the LPG engine operation, a predetermined amount of gasoline still remains in the float chamber, so that this residual gasoline is sucked into an intake passage and mixed with LPG, and as a result, the air-fuel mixture has an over-rich ***air-fuel ratio***. Furthermore, since the level of the gasoline in the float chamber decreases due to this suction of the residual gasoline, even if the supply of gasoline to the float chamber is started in order to reversely switch the LPG engine operating state to the gasoline engine operation state, the suction of the gasoline from the float chamber to the intake passage is delayed until the level of the gasoline recovers to a predetermined value, and as a result, the ***air-fuel ratio*** of the ***air-fuel mixture*** becomes over-lean.
>
> The present invention has been made in view of such points, and an object of the present invention is, in a gasoline-LPG combined engine comprising a carburetor equipped with a float chamber, to enable switching between a gasoline engine operation and an LPG engine

> operation during the operation of the engine without causing becoming over-rich of an ***air-fuel mixture*** when switching to the LPG engine operation and becoming over-lean when switching to the gasoline engine operation by blocking suction of gasoline from the float chamber to an intake passage during operation of the LPG engine.

Id., ¶¶[0004]–[0005] (emphasis added).

> According to the above-mentioned configuration, in the present invention, during the operation of the engine, at the time of switching the LPG engine operation in which the operation of the LPG supplying means is selected by the switching means, the control valve blocks the suction of gasoline from the float chamber to the intake passage, so that the gasoline remaining in the float chamber is not sucked out to the intake passage, which blocks the ***air-fuel mixture*** from being over-rich. On the other hand, at the time of switching to the gasoline engine operation, the residual gasoline at the above-mentioned predetermined level is rapidly sucked out to the intake passage, which blocks the ***air-fuel mixture*** from being over-lean.

Id., ¶[0008] (emphasis added).

> Therefore, in the above-described Example, during the operation of the engine, when the operation is switched to the LPG engine operation, the control valve 23 is turned OFF to close the fuel supplying passage 6 so that the

> gasoline remaining in the float chamber 5 is not sucked into the Venturi portions 2a and 2b. Therefore, becoming over-rich of the ***air-fuel mixture*** due to the suction of the gasoline can be prevented, and the level of the gasoline in the float chamber 5 can be maintained at a predetermined value. Furthermore, during the engine operation, when the operation is switched to the gasoline engine operation, the control valve 23 is turned ON by a cut signal from the gasoline-side contact point 19a of the fuel switching switch 19 to open the fuel supplying passage 6, whereby the gasoline remaining in the float chamber 5 at a predetermined level is quickly sucked into the Venturi portions 2a and 2b, thereby preventing the ***air-fuel mixture*** from becoming over-lean. Therefore, it is possible to appropriately switch between the gasoline engine operation and the LPG engine operation during the engine operation while securing a good combustion state by preventing the ***air-fuel mixture*** from becoming over-rich when switching to the LPG engine operation and from becoming over-lean when switching to the gasoline engine operation.

Id., ¶[0016] (emphasis added).

97. A POSA thus would have recognized that Nakafushi disclosed a dual-fuel engine that mixed air with the liquid fuel (i.e., gasoline) in the carburetor. And as shown in the figure below, the carburetor conveys the air/fuel mixture to the

engine via the intake passage, which is directly connected to the carburetor.

FIG. 1

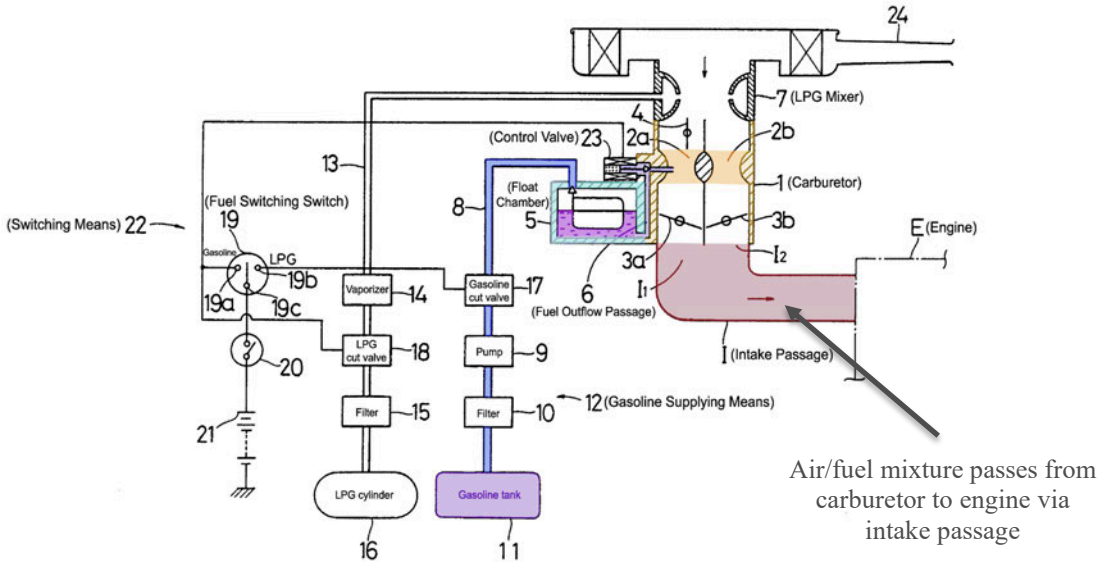

Id., Fig. 1 (coloring and annotations added).

98. Accordingly, Nakafushi teaches carburetor 1, attached to the engine intake, that mixes air and gasoline and thereby connects the gasoline fuel source to the intake, as recited in Element [1.2].

99. Thus, Nakafushi discloses this element.

d) Element [1.3]

100. Element [1.3] recites "a liquid cutoff solenoid coupled to the carburetor to open and close a liquid fuel path to the engine downstream from the float bowl." Nakafushi discloses a "liquid cutoff" satisfying this element. To the extent Nakafushi does not disclose a "solenoid," it would have been obvious to a POSA to use a solenoid based on the level of ordinary skill in the art and/or the

teachings of Olmr.

101. Nakafushi discloses a control valve 23. The control valve 23 serves as the "liquid cutoff" of Element [1.3] because it controls the flow of liquid fuel, explained in Nakafushi as follows:

> Furthermore, a control valve 23 configured to open and close the fuel outflow passage 6 is disposed so as to intervene in the fuel outflow passage 6. The control valve 23 is connected to the gasoline contact point 19a of the fuel switching switch 19, and is configured so that when the fuel switching switch 19 is switched to the gasoline contact point 19a side, that is, when the operation of the gasoline supplying means 12 is selected, the control valve 23 is turned ON upon receiving a cut signal to open the fuel outflow passage 6, thereby allowing the gasoline to be sucked from the float chamber 5 to the Venturi portions 2a and 2b, whereas when the fuel switching switch 19 is switched to the LPG contact point 19b side, that is, when the operation of the LPG bomb [sic: cylinder] 16 is selected, the control valve 23 is turned OFF by not receiving a cut signal to close the fuel outflow passage 6, thereby blocking the suction of the gasoline from the float chamber 5 to the Venturi portions 2a and 2b.

Ex. 1005, ¶[0014].

102. The control valve 23 is located on the liquid fuel path from the float

bowl to the venturi portions of the carburetor. The control valve 23 thus opens and closes the fuel path from the float chamber to the venturi and is therefore a "liquid cutoff" for purposes of Element [1.3]. Specifically, Nakafushi explains that "a control valve 23 configured to open and close the fuel outflow passage 6 is disposed so as to intervene in the fuel outflow passage 6." *Id.*, ¶[0014]. Thus, Nakafushi explains that fuel outflow passage 6 connects the float chamber 5 to the venturi portions 2a and 2b of the carburetor, with the fuel outflow passage 6 downstream of the float chamber 5. *Id.*, ¶[0010]. This arrangement can be seen in Figure 1:

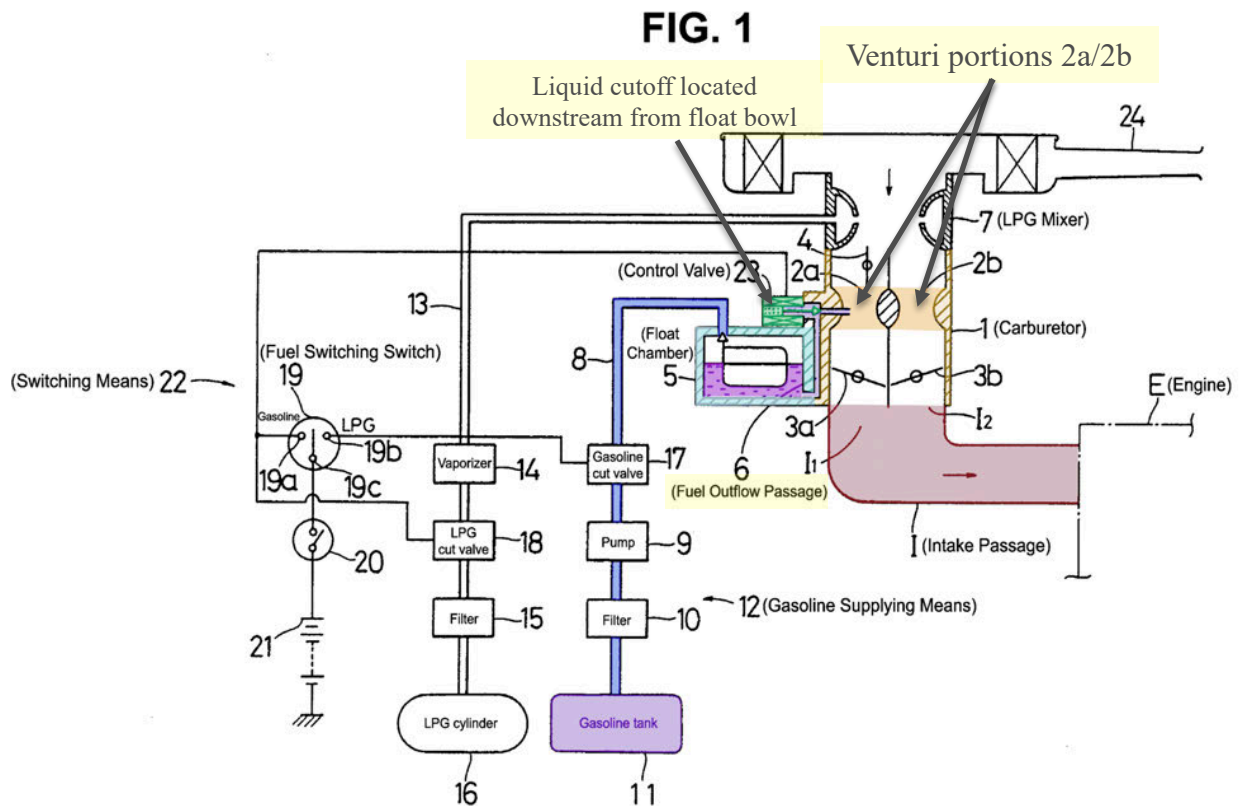

Id., Fig. 1 (coloring and annotations added).

103. Figure 1 thus shows that control valve 23 is "coupled to the carburetor" and is "downstream from the float bowl," and a POSA would have recognized that fuel outflow passage 6 is a "liquid fuel path to the engine," thus meeting these portions of Element [1.3].

104. While Nakafushi does not use the word "solenoid" to describe its liquid cutoff control valve 23, a POSA would have understood valve 23 to be a solenoid valve.

105. A solenoid valve is an electromechanically operated valve that uses an electromagnetic coil to control the flow of liquids or gases. When an electric current passes through the coil, it generates a magnetic field that moves a plunger that opens or closes a valve to regulate the flow. Solenoid valves allow for precise and automated control in various applications, including in carburetors. *See* §VII.C.

106. Nakafushi explains that the control valve is connected to an electrical circuit via a "contact point" and is "turned on" by "receiving a cut signal," as follows:

> Furthermore, a control valve 23 configured to open and close the fuel outflow passage 6 is disposed so as to intervene in the fuel outflow passage 6. ***The control valve 23 is connected to the gasoline contact point 19a of the fuel switching switch 19***, and is configured so that when

> the fuel switching switch 19 is switched to the gasoline contact point 19a side, that is, when the operation of the gasoline supplying means 12 is selected, ***the control valve 23 is turned ON upon receiving a cut signal*** to open the fuel outflow passage 6, thereby allowing the gasoline to be sucked from the float chamber 5 to the Venturi portions 2a and 2b, whereas when the fuel switching switch 19 is switched to the LPG contact point 19b side, that is, when the operation of the LPG bomb [sic: cylinder] 16 is selected, the control valve 23 is turned OFF by not receiving a cut signal to close the fuel outflow passage 6, thereby blocking the suction of the gasoline from the float chamber 5 to the Venturi portions 2a and 2b.

Ex. 1005, ¶[0014] (emphasis added).

107. Nakafushi's drawing of control valve 23 also indicates that the valve includes a plunger that moves laterally to open or close the fuel outflow passage 6 that leads to the venturi portions 2a/2b. Furthermore, the drawing shows a structure surrounding the plunger that a POSA would understand to be the electrical coil of a solenoid valve:

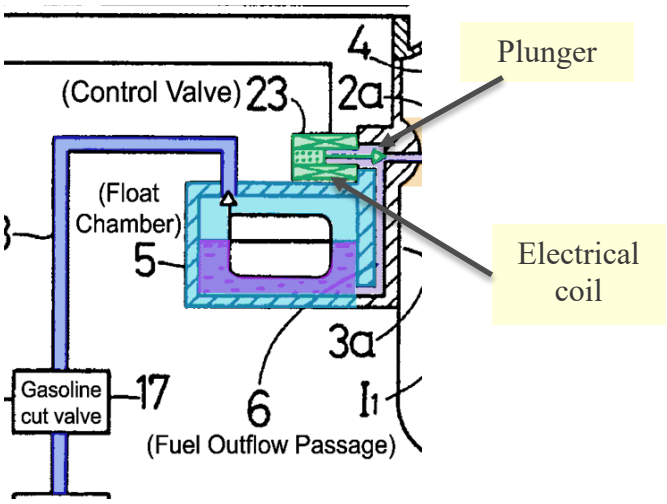

Id., Fig. 1 (cropped, colored, and annotated).

108. Notably, other publications having drawings similar to Nakafushi's explicitly identify control valve 23 as a solenoid valve. For example, the Workshop Manual discloses a "Gasoline Cut Off Solenoid" as shown below:

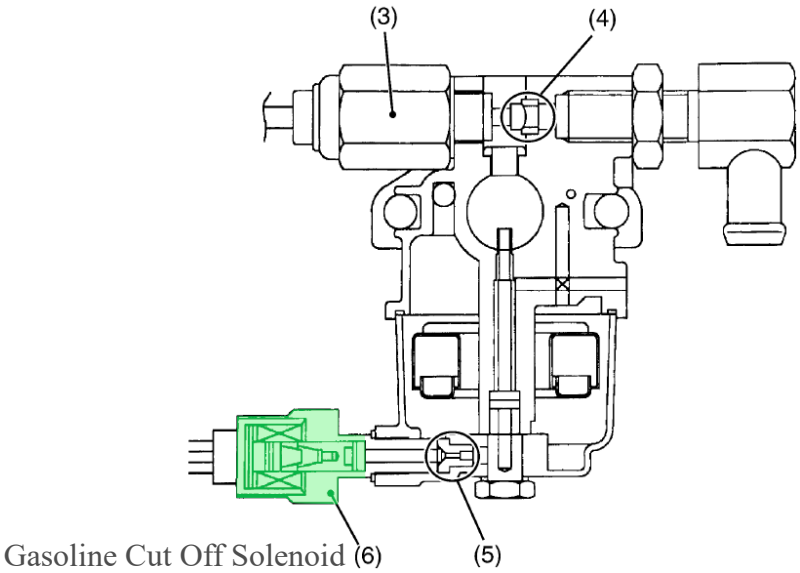

Ex. 1012, 68 (coloring and annotation added).

109. Thus, for at least the reasons described above, a POSA would

understand that Nakafushi discloses a solenoid as control valve 23.

110. In addition, other references likewise disclose gasoline cutoff solenoids. For example, Olmr discloses a gasoline engine having solenoid valve 42 in a bowl 30 that cuts off the flow of gasoline to the venturi 38 when the operator closes the kill switch, explaining:

> With additional reference to FIG. 2, the carburetor 18 has a bowl 30 into which gasoline 31 flows from a hose 26 connected to the fuel tank 20. Across the upper end of the bowl 30 is a tube 32 having an inlet 34 attached to the air cleaner 16 and outlet 36 coupled to the engine cylinder. The carburetor tube 32 includes a conventional venturi 38 in which the inner diameter of the tube 32 is reduced significantly. A gasoline feed tube 40 has a ***solenoid valve 42*** located above the level of the gasoline 31 in the bowl 30 and so that fuel residue will not build up on the valve.
>
> The ***solenoid valve 42*** includes a cross tube 44 in which a spool valve plunger 45 is located. The spool valve plunger 45 is fabricated from a cylindrical rod of ferromagnetic material and has a smaller diameter portion 48. A compression spring 46 at one end 47 of the cross rube 44 biases the spool valve plunger 45 into a position at which the smaller diameter portion 48 is aligned with the gas feed rube 40, when the ***solenoid valve 42*** is deenergized. Because portion 48 is smaller in diameter than the internal diameter of the cross tube 44, a passage exists at the

> intersection of tubes 40 and 44 enabling gasoline within the bowl 30 to be drawn upward through the gas feed tube 40 and into the venturi 38 due to the Bernoulli effect.

Ex. 1007, 2:30–68.

> When it is desired to shut off the engine 10, the operator closes a kill switch 82. Switch 82 is a double-pole, single-throw type having a first set of contacts 84 which connect the ignition circuit output to ground as is conventionally done to stop small gasoline engines. A second set of contacts 86 of the kill switch 82 connect the electromagnet coil 50 of the solenoid valve 42 across the storage capacitor 78. This action causes current to flow from the storage capacitor 78 through the coil 50 producing a magnetic field which pushes the spool valve plunger 45 against spring 46 a sufficient distance so that the spool valve plunger blocks gas from flowing through the feed tube 40 in the venturi 38. This action either cuts off the flow of gas to the venturi or significantly leans the air-fuel mixture. For example, an air-fuel mixture of 150 to 1 or greater is sufficient to prevent backfiring while the engine is stopping.

Id., 4:11–27.

111. Olmr's Figure 2, shown below, illustrates the gasoline cutoff solenoid, highlighted in green:

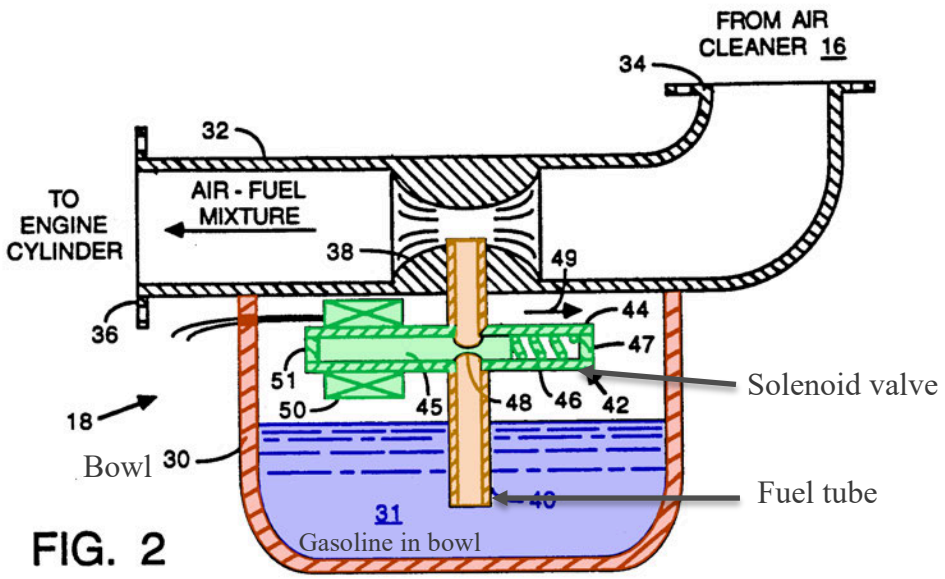

Id., Fig. 2 (coloring and annotations added).

112. As shown above, Olmr's valve 42 is a liquid cutoff solenoid coupled to the bowl 30 in the carburetor that opens and closes a liquid fuel path downstream from the bowl en route to the engine via venturi 38.

113. To the extent not already expressly taught by Nakafushi, a POSA would have found it obvious to utilize a solenoid such as that disclosed by Olmr for Nakafushi's control valve 23, as discussed below.

(1) Motivation to Combine Olmr with Nakafushi

114. At the time of the invention, a POSA would have been aware of various benefits of using solenoids valves in a carburetor to control the flow of fuel.

115. First, solenoid valves offer excellent precision and control. A POSA

understood that solenoids allow for accurate adjustments to the air-fuel mixture, which is crucial for optimizing engine performance and efficiency.

116. Second, solenoid valves respond rapidly to changes in electrical signals, which enables quick adjustments to the fuel flow. As such, a POSA would have understood that solenoid cutoff valves can rapidly open or shut off the supply of liquid fuel to the engine, allowing better control over engine operation and performance.

117. Third, solenoid valves are known for their reliability and long lifespan. Solenoid valves can withstand the harsh conditions within an engine, such as high temperatures and vibrations, making them a durable choice.

118. And fourth, solenoid valves can be easily integrated into electronic control systems. This allows for robust control of the carburetor, which enhances the fuel-control system's overall functionality and adaptability.

119. These four benefits of solenoid valves (precise control, rapid response, reliability, and easy electrical integration) would have been known to a POSA as of the critical date and are reasons why solenoid valves have been used to control fuel flow to an engine, such as taught by Olmr (if not Nakafushi in the first instance).

120. Nakafushi relates to combustion engines that operate on gasoline (at least some of the time). *See* Ex. 1005, ¶[0001] ("The present invention relates to a

gasoline-LPG combined engine configured to selectively use gasoline or LPG as fuel."). Olmr likewise relates to gasoline engines. *See* Ex. 1007, 1:6–8, 2:17–18 ("The present invention relates to internal combustion engines and more particularly to mechanisms for stopping the flow of fuel when such engines are to stop. . . . FIG. 1 illustrates a single cylinder gasoline engine 10 such as the type commonly found on lawn mowers.). Accordingly, Olmr is within the same field of endeavor as both Nakafushi and the '034 Patent.

121. In Nakafushi, control valve 23 cuts off the flow of gasoline from the float chamber 5 when engine operation is switched from gasoline to LPG. *See* Ex. 1005, ¶[0014] ("Furthermore, control valve 23 configured to open and close the fuel outflow passage 6 is disposed so as to intervene in the fuel outflow passage 6.); *id.*, ¶[0016] ("[D]uring the operation of the engine, when the operation is switched to the LPG engine operation, the control valve 23 is turned OFF to close the fuel supplying passage 6 so that the gasoline remaining in the float chamber 5 is not sucked into the Venturi portions 2a and 2b.").

122. While Nakafushi does not expressly say what type of valve is used for this purpose (although as explained above, I believe a POSA would have understood that Nakafushi's control valve 23 is in fact a solenoid), Olmr expressly teaches a solenoid (valve 42) for cutting off the flow of gasoline from the float bowl 30 when the engine is off. Ex. 1007, 2:30–51.

123. A POSA would have understood that the solenoid valve in Olmr, like the control valve in Nakafushi, controls the flow of gasoline from the float bowl to the venturi (and thus, to the engine).

124. Olmr thus teaches a more specific example—a solenoid valve—for accomplishing the same function taught by Nakafushi, i.e., cutting gasoline flow to the carburetor when needed. Given the many benefits of using a solenoid valve in a carburetor—benefits which were well known to a POSA at the time—a POSA would have therefore been motivated to rely on Olmr's express teaching of a solenoid valve to accomplish the goal of Nakafushi and would have been motivated to use a solenoid for its control valve 23, to the extent not already expressly taught in Nakafushi.

(2) Reasonable Expectation of Success

125. A POSA would have had a reasonable expectation of success in using Olmr's solenoid valve 42 with the engine of Nakafushi.

126. At the time of the invention, solenoids valves were widely used. *See, e.g.*, Ex. 1019, 4 ("Solenoids are widely used to produce linear movement to actuate valves (solenoid valves) and other devices."). The use of solenoid valves to cut off the flow of fuel to an engine was also ubiquitous, with Olmr being just one example, and the Kubota Workshop Manual providing another example. *See* Ex. 1012, 68 (showing a "Gasoline Cut Off Solenoid" used in the carburetor of

the DF-972 engine).

127. Furthermore, Nakafushi discloses a simple electrical circuit to open and close control valve 23. Ex. 1005, ¶¶[0013]-[0014], Fig. 1. As described previously, a solenoid is essentially a coil of wire that generates a magnetic field when an electric current passes through it. This magnetic field can be used to move a plunger or core inside the coil, as shown in Olmr.

128. To control a solenoid with a simple circuit, a POSA would typically need a power source and a switch. Nakafushi's electrical circuit includes these basic components:

FIG. 1

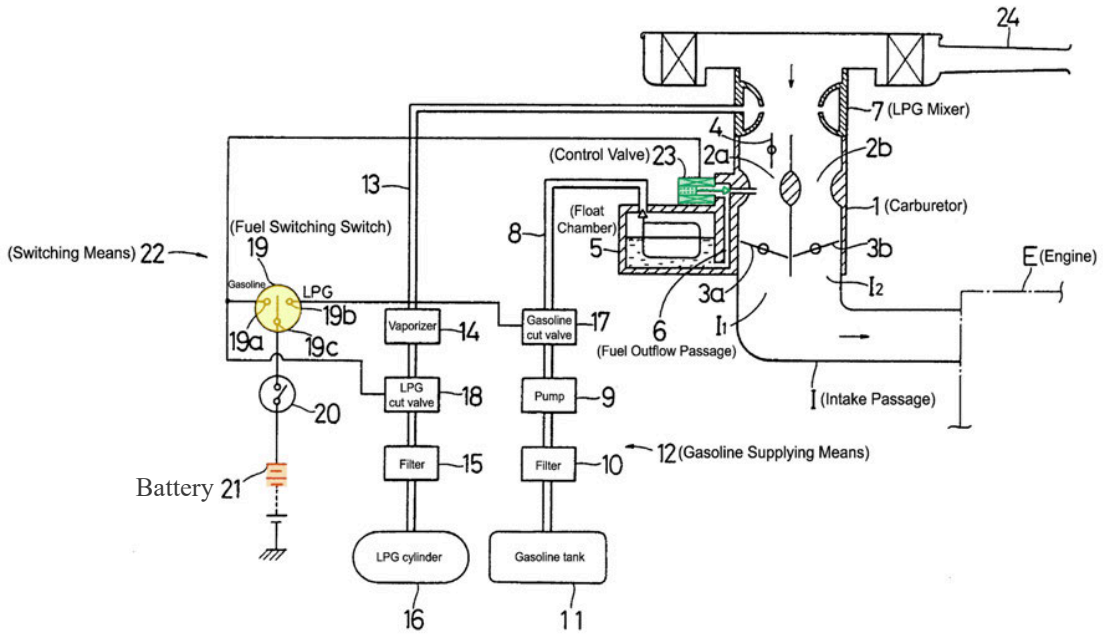

Id., Fig. 1 (disclosing a control valve 23 connected to a fuel switching switch 19 and a battery 21) (coloring and annotation added).

129. Olmr likewise teaches an electrical circuit for operating its solenoid valve that includes a switch and a power source. Ex. 1007, 2:57-4:27, Figs. 2-3.

130. A POSA would therefore have recognized that Nakafushi's electrical circuit could energize a solenoid valve, such as the solenoid valve 43 disclosed in Olmr, to open and close as called for by Nakafushi's control valve 23.

131. A POSA would have therefore reasonably expected that Olmr's solenoid valve could be successfully implemented to serve as Nakafushi's liquid fuel cutoff control valve 23 to accomplish the desired function of cutting off the supply of gasoline from Nakafushi's float chamber 5 to the intake of the engine.

e) Element [1.4]

132. Element [1.4] recites "a gaseous cutoff coupled to open and close a gaseous fuel source to the engine."

133. Nakafushi discloses LPG cut valve 18 to block the supply to LPG to the LPG mixer:

> Furthermore, a gasoline cut valve 17 configured to close the gasoline supplying passage 8 in response to a cut signal (described later) is provided in the gasoline supplying passage 8 so as to intervene between the float chamber 5 and the pump 9. On the other hand, an ***LPG cut valve 18 configured to close the LPG supplying passage 13 in response to a cut signal*** (described later) is provided in the LPG supplying passage 13 so as to intervene between the

> vaporizer 14 and the filter 15. Both of the ***cut valves 17 and 18*** are connected to a gasoline-side contact point 19a and an LPG side contact point 19b of a two-pole fuel switching switch 19, respectively, and a switching means 22 in which a common contact point 19a of the fuel switching switch 19 is connected to a battery 21 via an ignition switch 20. When the ignition switch 20 is turned ON, when the engine E is operated as a gasoline engine, the fuel switching switch 19 is switched to the gasoline-side contact point 19a and ***a cut signal is input to the LPG cut valve 18 to block the supply of LPG to the LPG mixer 7*** and operate the gasoline supplying means 12 to supply gasoline to the carburetor 1, whereas when the engine E is operated as an LPG engine, the fuel switching switch 19 is switched to the LPG side contact point 19b and a cut signal is input to the gasoline cut valve 17, whereby the gasoline supply to the carburetor 1 is blocked, and an LPG supplying means (LPG bomb [sic: cylinder]) 16 is operated to switch so as to supply LPG to the LPG mixer 10, is provided.

Ex. 1005, ¶[0013] (emphasis added).

134. Cut valve 18's function in opening and closing the gaseous fuel source to the engine is highlighted in Figure 1 below:

FIG. 1

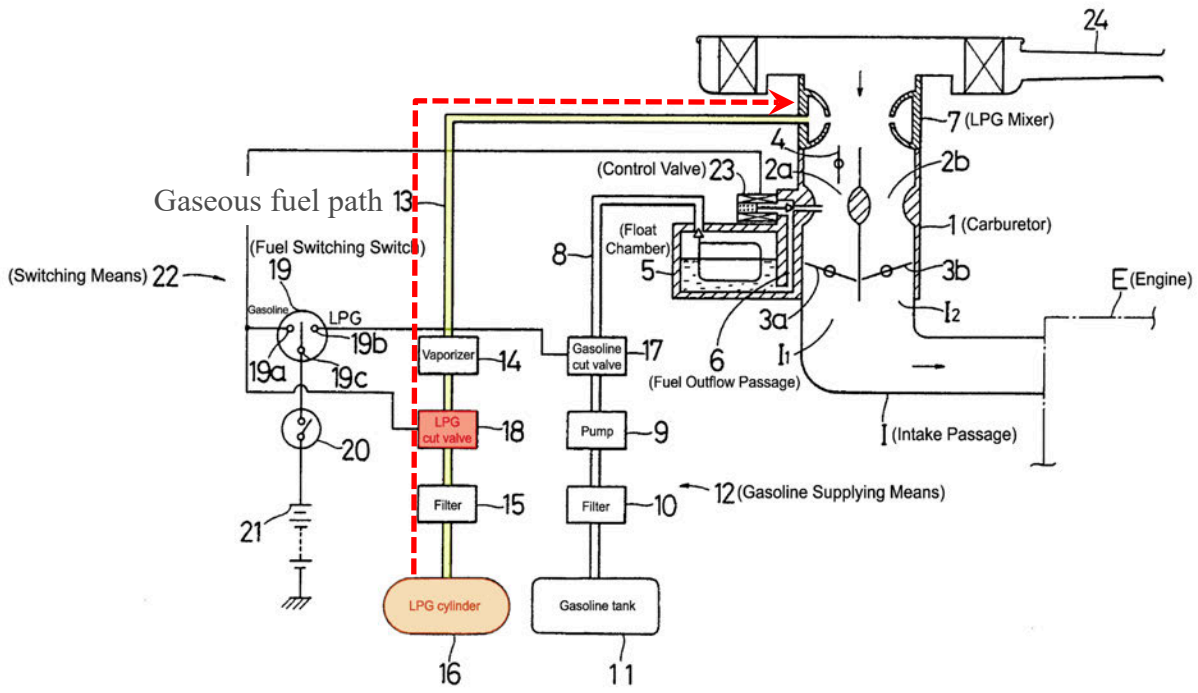

Id., Fig. 1 (coloring and annotations added)

135. Therefore, a POSA would understand that Nakafushi's LPG cut valve 18 is a gaseous cutoff as required by Element [1.4].

f) Element [1.5]

136. Element [1.5] recites "a switch selectively coupling a power source to the liquid cutoff solenoid to open and close the liquid fuel path."

137. Nakafushi discloses a "fuel switching switch 19" that is "connected to a battery 21 via an ignition switch 20." Ex. 1005, ¶[0013]. Nakafushi's liquid cutoff valve 23, switch 19, and battery 21 are highlighted in Figure 1 below:

FIG. 1

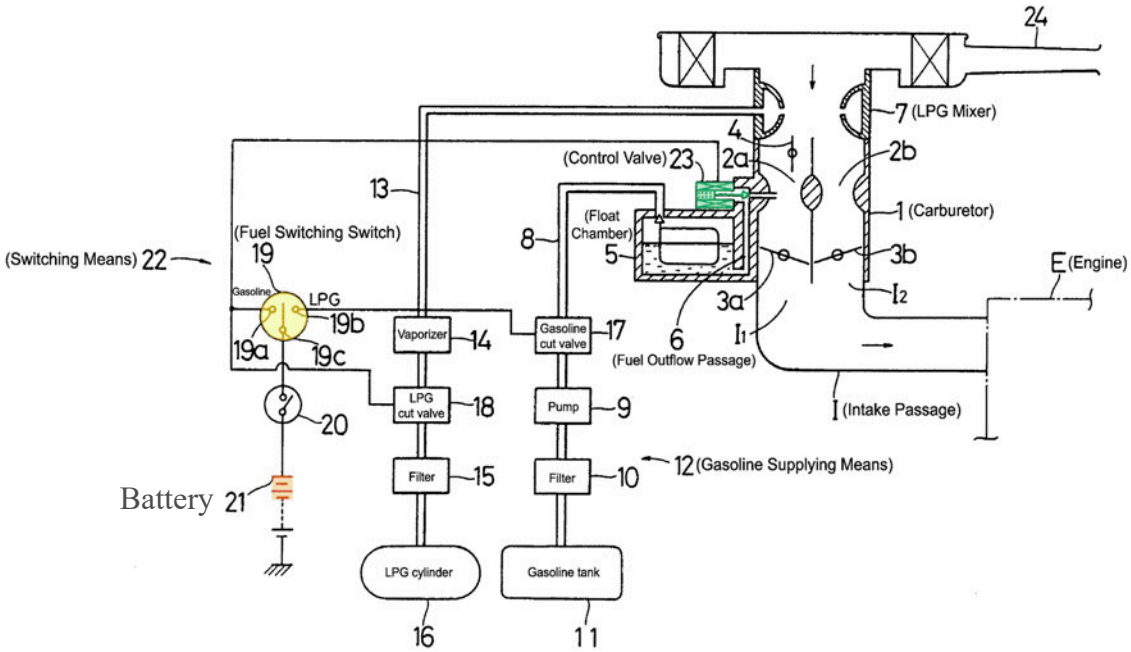

Id., Fig. 1 (coloring and annotation added).

138. Nakafushi's battery 21 is a "power source" and is coupled to the fuel switching switch 19 for "selectively coupling a power source to the liquid cutoff solenoid to open and close the liquid fuel path." Specifically, the fuel switching switch 19 has a "gasoline-side contact point 19a and an LPG side contact point 19b," and Nakafushi discloses that the "selective coupling" between the fuel switching switch 19 to the control valve 23 occurs through the gasoline side contact 19a: "the control valve 23 is connected to the gasoline contact point 19a of the fuel switching switch 19, ..." *Id*., ¶¶[0013]-[0014].

139. This selective coupling causes "the liquid solenoid to open and close

the liquid fuel path." Nakafushi discloses that during gasoline operation, "the control valve 23 is turned ON …, thereby allowing the gasoline to be sucked from the float chamber 5 to the Venturi portions 2a and 2b," while during LPG operation, "the control valve is turned OFF …, thereby blocking the suction of the gasoline from the float chamber 5 to the Venturi portions 2a and 2b." *Id.* ¶[0014]. Thus, the control valve 23 opens and closes the fuel outflow passage 6, which is the "liquid fuel path": "a control valve 23 configured to open and close the fuel outflow passage 6 is disposed so as to intervene in the fuel outflow passage 6." *Id*.

140. When using a solenoid as the liquid cutoff as taught by Nakafushi and Olmr (*see* §XII.A.1.d, above), Nakafushi's switch 19 would operate on the solenoid operating as the liquid cutoff, in the same way that Olmr teaches the opening and closing of its solenoid valve 42 via a similar switch and power source (Ex. 1007, 2:57-4:27, Fig. 2-3).

141. In addition, as seen above, Nakafushi's Figure 1 shows the fuel switching switch 19 as part of a circuit connected to the battery 21 that is also connected to the control valve 23. Ex. 1005, Fig. 1. Figure 1 shows that when the fuel switching switch 19 is switched to the gasoline side contact 19a, an electrical connection forms between the battery 21 and the control valve 23. *Id.*

142. Nakafushi (either by itself or as modified by Olmr to utilize a solenoid as the liquid cutoff) thus discloses this element. Thus, Nakafushi by itself discloses

all elements of Claim 1, and in combination with Olmr renders Claim 1 obvious.

2. Claim 2

143. Claim 2 depends from Claim 1, and requires two additional elements.

a) Element [2.1]

144. Element [2.1] recites "wherein the liquid cutoff solenoid is positioned on the liquid fuel path, which extends from the float bowl to a throat of the carburetor, to open and close the liquid fuel path."

145. As explained for Element [1.3], Nakafushi's control valve 23 is a "liquid cutoff" that opens and closes the liquid fuel path at a location downstream of the float bowl. *See* §XII.A.1.d, above. Since it is downstream of the float bowl, Nakafushi's control valve 23 is necessarily positioned on the liquid fuel path extending from the float bowl to a throat of the carburetor, as seen in annotated Figure 1:

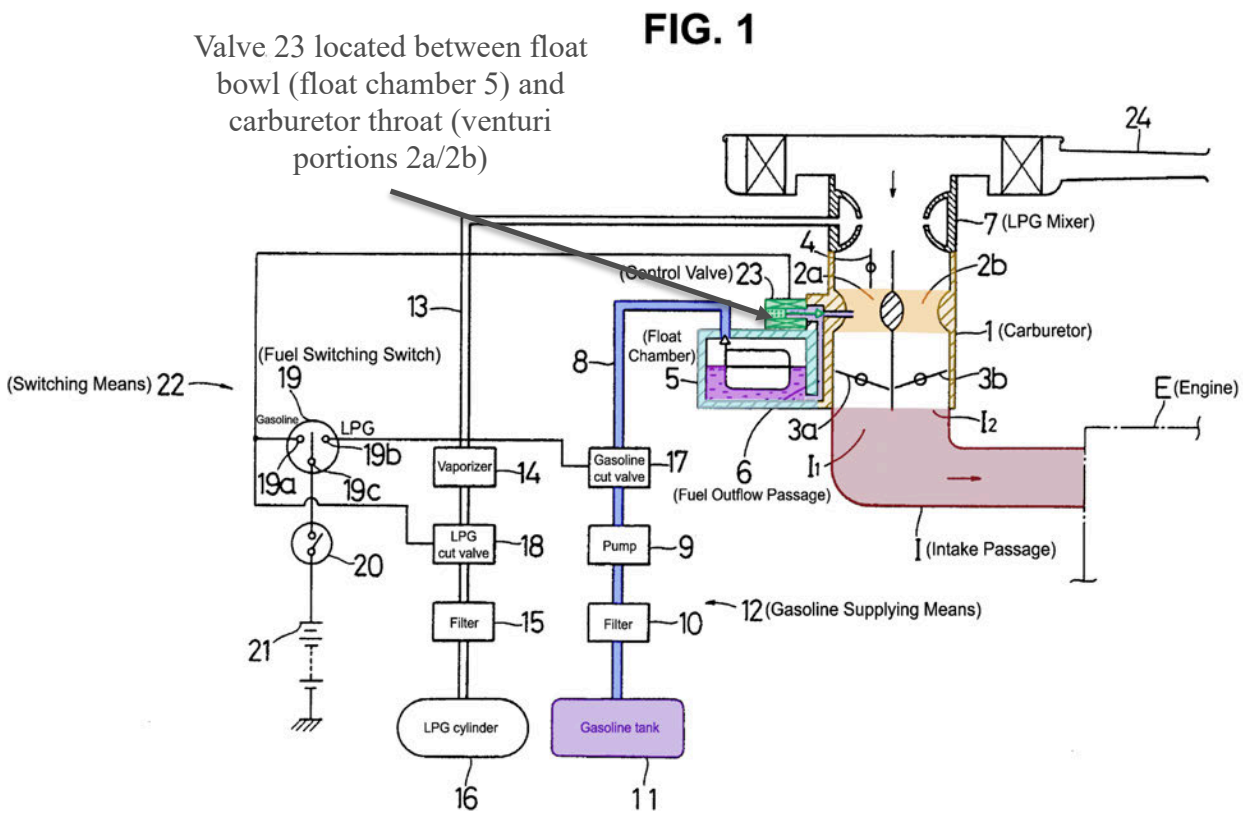

Ex. 1005, Fig. 1 (coloring and annotations added). A further enlarged excerpt from Figure 1 shows the position of Nakafushi's control valve 23 on the fuel pathway downstream from the float bowl even more clearly:

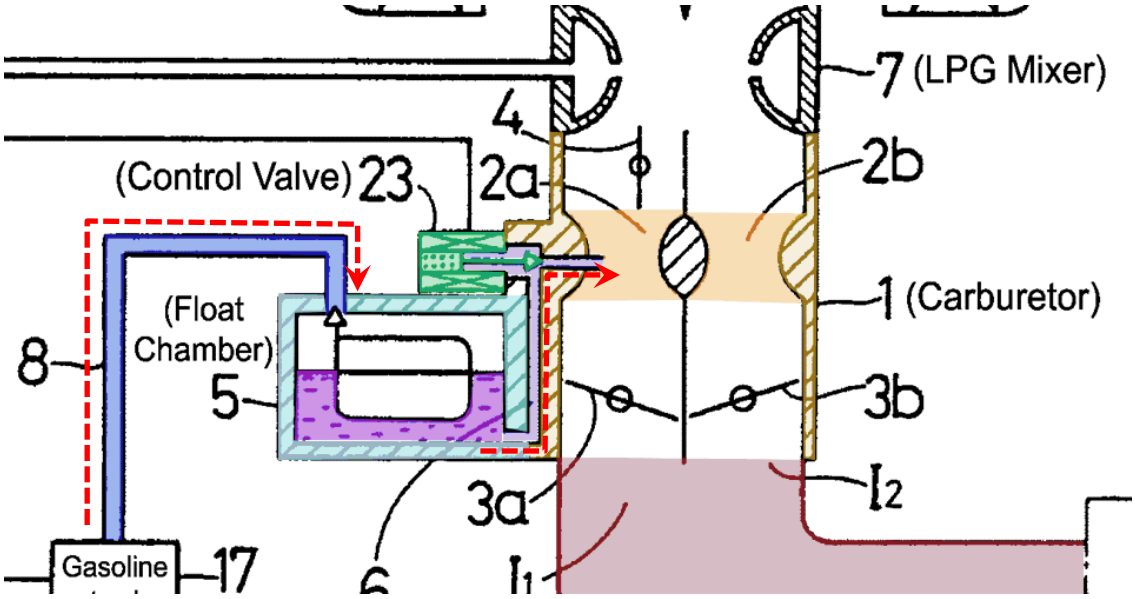

Id. (cropped, coloring and red dashed arrows added).

146. Furthermore, as explained with respect to Element [1.3] (§XII.A.1.d, above), Nakafushi discloses a solenoid and, in the alternative, it was obvious to use a solenoid for Nakafushi's control valve 23 as taught by Olmr.

b) Element [2.2]

147. Element [2.2] recites "further wherein the gaseous cutoff couples the gaseous fuel source to the intake to control flow of the gaseous fuel to the engine."

148. As noted for Element [1.4] (§XII.A.1.e, above), Nakafushi discloses a "gaseous cutoff" that "couples the gaseous fuel source" (i.e., Nakafushi's LPG cylinder 16) "to the intake to control the flow of the gaseous fuel to the engine." Ex. 1005, [0013].

149. Nakafushi thus discloses Claim 2, and renders Claim 2 obvious in view of Olmr.

3. Claim 3

150. Claim 3 depends from Claim 1, and further requires "wherein the switch actuates the liquid cutoff solenoid to enable changing engine operation between the liquid fuel and the gaseous fuel, so as to prevent fuel flow from the liquid fuel source and the gaseous fuel source simultaneously and allow switching between fuel sources on-the-fly during engine operation."

151. As noted for Element [1.5] (§XII.A.1.f, above), Nakafushi discloses fuel switchover switch 19 that controls the control valve 23 (i.e., the liquid cutoff solenoid, including when Nakafushi is combined with Olmr for this element (§XII.A.1.d, above)), the LPG cut valve 18, and gasoline cut valve 17 "to prevent fuel flow from the liquid fuel source and the gaseous fuel source simultaneously." Specifically, the switch simultaneously opens control valve 23 and gasoline cut valve 17, and closes the LPG valve 18 during gasoline operation and vice versa for LPG operation. Ex. 1005, ¶¶[0013]-[0014].

> [0013] Furthermore, a gasoline cut valve 17 configured to close the gasoline supplying passage 8 in response to a cut signal (described later) is provided in the gasoline supplying passage 8 so as to intervene between the float chamber 5 and the pump 9. On the other hand, an LPG cut valve 18 configured to close the LPG supplying passage 13 in response to a cut signal (described later) is provided in the LPG supplying passage 13 so as to intervene

between the vaporizer 14 and the filter 15. Both of the cut valves 17 and 18 are connected to a gasoline-side contact point 19a and an LPG side contact point 19b of a two-pole fuel switching switch 19, respectively, and a switching means 22 in which a common contact point 19a of the fuel switching switch 19 is connected to a battery 21 via an ignition switch 20. When the ignition switch 20 is turned ON, when the engine E is operated as a gasoline engine, the fuel switching switch 19 is switched to the gasoline-side contact point 19a and a cut signal is input to the LPG cut valve 18 to block the supply of LPG to the LPG mixer 7 and operate the gasoline supplying means 12 to supply gasoline to the carburetor 1, whereas when the engine E is operated as an LPG engine, the fuel switching switch 19 is switched to the LPG side contact point 19b and a cut signal is input to the gasoline cut valve 17, whereby the gasoline supply to the carburetor 1 is blocked, and an LPG supplying means (LPG bomb [sic: cylinder]) 16 is operated to switch so as to supply LPG to the LPG mixer 10, is provided.

[0014] Furthermore, a control valve 23 configured to open and close the fuel outflow passage 6 is disposed so as to intervene in the fuel outflow passage 6. the control valve 23 is connected to the gasoline contact point 19a of the fuel switching switch 19, and is configured so that when the fuel switching switch 19 is switched to the gasoline

> contact point 19a side, that is, when the operation of the gasoline supplying means 12 is selected, the control valve 23 is turned ON upon receiving a cut signal to open the fuel outflow passage 6, thereby allowing the gasoline to be sucked from the float chamber 5 to the Venturi portions 2a and 2b, whereas when the fuel switching switch 19 is switched to the LPG contact point 19b side, that is, when the operation of the LPG bomb [sic: cylinder] 16 is selected, the control valve 23 is turned OFF by not receiving a cut signal to close the fuel outflow passage 6, thereby blocking the suction of the gasoline from the float chamber 5 to the Venturi portions 2a and 2b.

152. This simultaneous operation of control valves 17, 18 and 23 prevents gasoline from entering the carburetor during LPG operation and prevents LPG from entering the carburetor during gasoline operation, i.e., it prevents both fuels from entering the carburetor simultaneously but allows for switching between the fuel sources while the engine is running (i.e., "on the fly" switching).

153. Specifically, when Nakafushi's fuel switching switch 19 is switched to the gasoline contact point 19a side, a cut signal is sent to the LPG cut valve 18 (the "gaseous cutoff") and "simultaneously," the control valve 23 (the "liquid cutoff") receives a signal to open the fuel outflow passage 6. *Id.,* ¶¶[0013]-[0014]. In contrast, when fuel switching switch 19 is switched to the LPG contact point 19b side, the reverse occurs and a cut signal is sent to the gasoline cut valve 17 to

stop gasoline flow while the LPG valve 18 is opened to allow the flow of LPG. *Id.*

154. Figure 1 from Nakafushi (see §XII.A.1.f, above) shows that the LPG cut valve 18 (the "the gaseous cutoff") and the control valve 23 (the "liquid cutoff") are on the same circuit with a single fuel switching switch, such that the switching of switch 19 will "simultaneously" actuate both valves to their respective open or closed positions. *Id.*, Fig. 1.

155. Nakafushi discloses that this operation "allow[s] switching between fuel sources on-the fly during engine operation." For example, Nakafushi describes the problem with the prior art as follows:

> even if the supply of gasoline to the float chamber is interrupted in order to switch from the gasoline engine operation state to the LPG engine operation, a predetermined amount of gasoline still remains in the float chamber, so that this residual gasoline is sucked into an intake passage and mixed with LPG, and as a result, the air-fuel mixture has an over-rich air-fuel ratio.

Id., ¶[0004].

Nakafushi explains that the invention overcomes this problem:

> an object of the present invention is, in a gasoline-LPG combined engine comprising a carburetor equipped with a float chamber, to enable ***switching between a gasoline engine operation and an LPG engine operation during the operation of the engine*** without causing becoming

> [sic] over-rich of an air-fuel mixture when switching to the LPG engine operation and becoming over-lean when switching to the gasoline engine operation by blocking suction of gasoline from the float chamber to an intake passage during operation of the LPG engine.

Id., ¶[0005] (emphasis added); *see also id.*, ¶¶[0008], [0016].

4. Claim 5

156. Claim 5 depends from Claim 1 and further requires that "the engine is a dual fuel engine that operates on gasoline from the liquid fuel source and LPG from the gaseous fuel source."

157. As already noted (see §§XII.A.1.a-b, above), Nakafushi discloses a dual fuel engine that that operates on gasoline from the liquid fuel source and LPG from the gaseous fuel source, expressly stating that "[t]he present invention relates to a gasoline-LPG combined engine configured to selectively use gasoline or LPG as a fuel." *Id*., ¶[0001].

5. Claim 6

158. Claim 6 depends from Claim 1, and further requires that "activating the gaseous cutoff simultaneously activates the liquid cutoff solenoid."

159. As discussed previously (§§XII.A.1.f and XII.A.3, above)), Nakafushi explains that the fuel switchover switch 19 "simultaneously" activates the gaseous cutoff and the liquid cutoff solenoid, such that when one of the cutoffs

is actuated to open, the other cutoff simultaneously actuates to close, and vice-versa. Ex. 1005, ¶¶[0013]-[0014], Fig. 1 (showing the valves on the same circuit such that the activation of both cutoffs is "simultaneous" when the switch is alternated between contact points 19a (for gasoline fuel) and 19b (for LPG fuel)).

160. A POSA would understand that activating a cutoff solenoid valve in the context of the '034 Patent means changing the position of the valve, i.e. actuating it from either an open position to a closed position or from a closed position to an open position.

161. Nakafushi thus discloses this element.

6. Claim 7

162. Claim 7 depends from Claim 1, and further requires that "the liquid cutoff solenoid is selectively operable to cut off fuel flow from the float bowl to a nozzle in a venturi of the carburetor upstream from a throttle for the engine."

163. Nakafushi discloses that the control valve 23, which is the claimed "liquid cutoff solenoid" by itself or when modified with Olmr (*see* §XII.A.1.d, above), is "selectively operable to cut off fuel flow from the float bowl to a nozzle in a venturi of the carburetor." *Id*.

164. Specifically, control valve 23 cuts fuel flow in the fuel outflow passage 6, which terminates as a "nozzle in a venturi of the carburetor." *Id.*, [0014], Fig. 1. Figure 1 shows that the fuel outflow passage terminates at the carburetor

venturi, and this termination comprises an outlet that discharges a spray of liquid gasoline into the venturi, mixing it with the air, as seen in the figure below. A POSA would understand that the outlet would be considered a nozzle because it directs and controls the flow of fluid into the venturi.

165. In Nakafushi's engine, gasoline flows from the float chamber 5 to the intake through Venturi portions 2a and 2b which are "upstream from a throttle for the engine." *Id.*, ¶[0010], Fig. 1.

166. For example, Nakafushi states "Venturi portions 2a and 2b are formed in a primary side intake passage I_1 and a secondary side intake passage I_2 of the carburetor 1, respectively, and throttle valves 3a and 3b are disposed downstream of the Venturi portions 2a and 2b." Ex. 1005, [0010]. Therefore, the Venturi portions 2a and 2b are "upstream" of the throttle valves 3a and 3b, as seen in Figure 1:

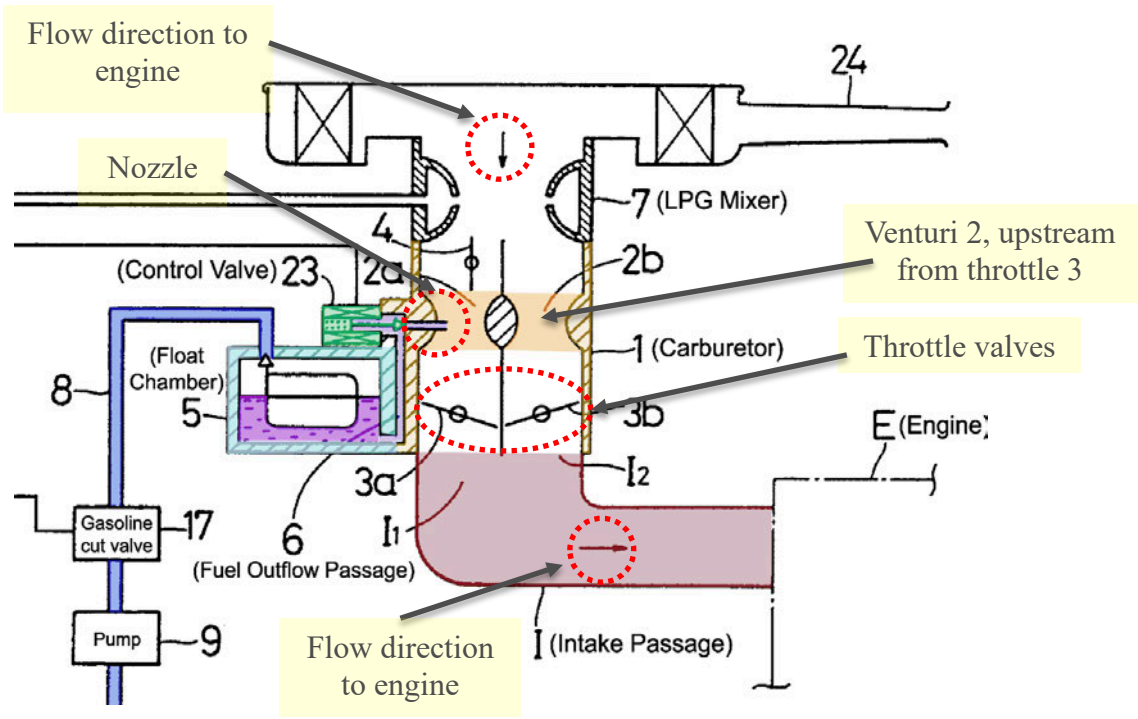

Ex. 1005, Fig. 1 (coloring and annotations added).

7. Claim 8

167. Claim 8 depends from Claim 1, and requires that "the carburetor connects the gaseous fuel source to the intake."

168. Nakafushi teaches that "an LPG mixer 7 for vaporizing LPG and supplying the vaporized LPG to the intake passage I is mounted on the upper portion of the carburetor 1." Ex. 1005, ¶[0011]. Further, "the LPG mixer 7 is communicated with an LPG cylinder 16 as an LPG supplying means by an LPG supplying passage 13 via a vaporizer 14 for vaporizing LPG and a filter 15." *Id.*, ¶[0012]. As seen below, LPG gas thus enters the carburetor via mixer 7, then flows through carburetor 1 to the engine intake via intake passage I:

FIG. 1

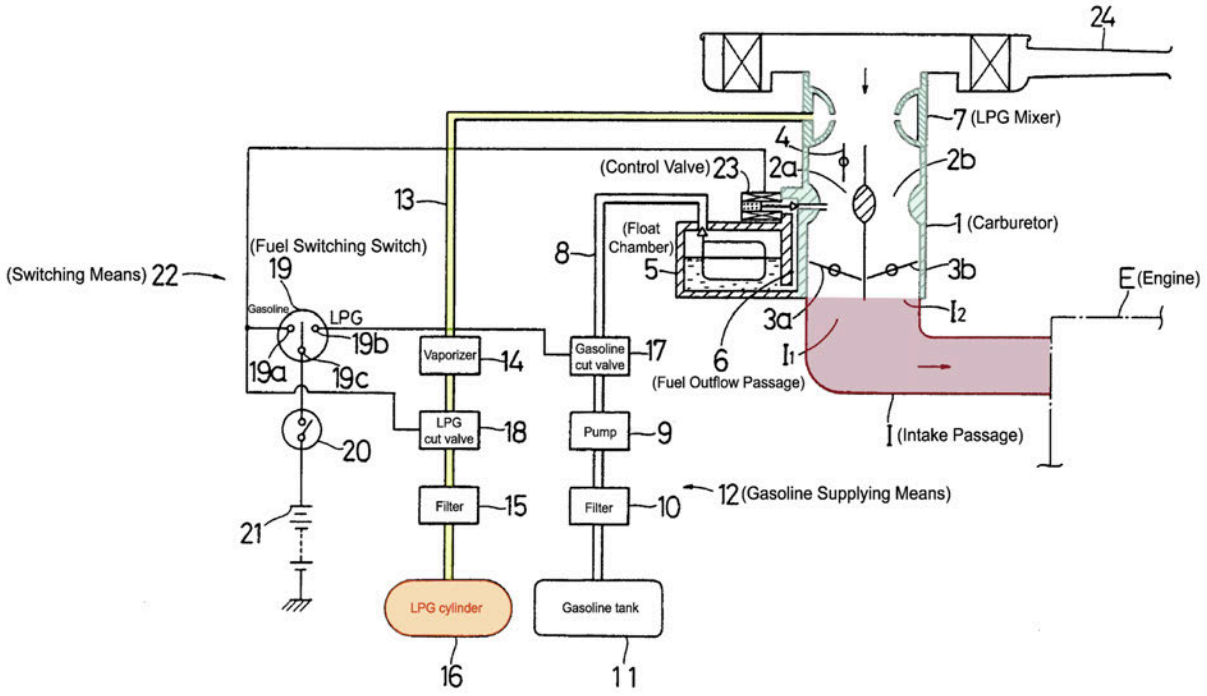

Id., Fig. 1 (coloring added).

169. These disclosures show that LPG is delivered to the intake passage upon passing through the venturi of the carburetor.

170. Thus, Nakafushi discloses that carburetor 1 connects the gaseous fuel source (LPG cylinder 16, LPG mixer 7) to the intake I.

8. Claim 9

171. Claim 9 depends from Claim 1, and requires that the engine further comprise "a liquid fuel valve positioned on a liquid fuel line coupling the liquid fuel source to the carburetor to open and close the liquid fuel source to the engine."

172. As discussed previously, Nakafushi's control valve 23 is a fuel valve

positioned on the liquid fuel line coupling the liquid fuel source to the carburetor to open and close the liquid fuel source to the engine. *See* §XII.A.1.d, above. In addition to control valve 23, Nakafushi also discloses "a gasoline cut valve 17 configured to close the gasoline supplying passage 8 in response to a cut signal … to intervene between the float chamber 5 and the pump 9." Ex. 1005, ¶[0013]. Indeed, Figure 1 shows gasoline cut valve 17 positioned on the gasoline supply passage 8 leading to float chamber 5, which in turn is connected to carburetor 1 through fuel outflow passage 6. *Id.*, Fig. 1. The arrows highlighted in Figure 1 below show how the fuel travels from the intake I_1 and intake I_2 of the carburetor to the engine E:

FIG. 1

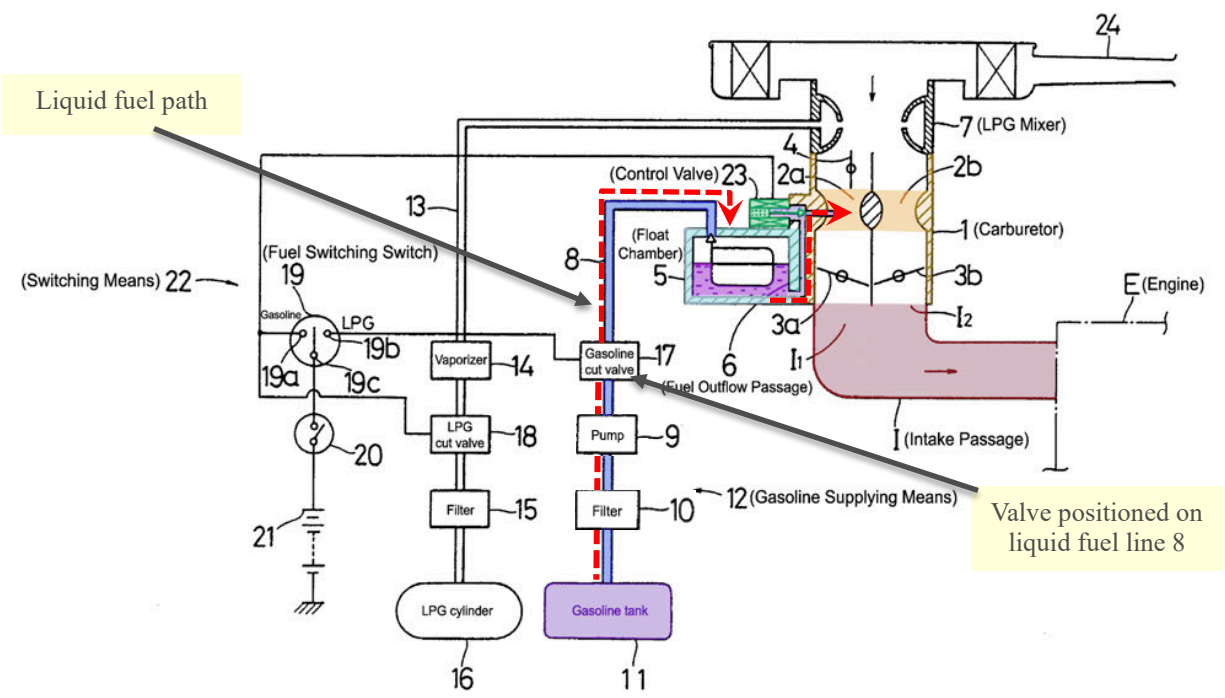

Id., Fig. 1 (coloring and annotations added).

173. Nakafushi's valve 17 thus satisfies the added limitations of Claim 9, such that Nakafushi itself, or in combination with Olmr, renders Claim 9 invalid.

9. Claim 18

a) Element [18.0]

174. Nakafushi discloses "a multi-fuel internal combustion engine." *See* §XII.A.1.a, above.

b) Element [18.1]

175. Element [18.1] recites "an engine operable on liquid fuel supplied through a liquid fuel line from a liquid fuel source and gaseous fuel supplied through a gaseous fuel line from a pressurized fuel source."

176. The engine disclosed in Nakafushi selects between gasoline and LPG as fuel. Ex. 1005, ¶[0001]. As noted in the '034 Patent, gasoline is liquid fuel and LPG is a gaseous fuel. Ex. 1001, 3:45-47.

177. Nakafushi's "liquid fuel source" is gasoline tank 11. Ex. 1005, ¶[0012], Fig. 1. The gasoline is supplied from gasoline tank 11 through gasoline supply passage 8 to float chamber 5, then to carburetor 1 through a fuel outflow passage 6, and then to the engine through intake I. *Id.*, ¶¶[0010], [0012], Fig. 1.

178. The "pressurized fuel source" for the gaseous fuel is Nakafushi's LPG cylinder 16. *Id.*, ¶[0012], Fig. 1. Gaseous fuel is supplied from LPG cylinder 16 through LPG supply passage 13 to the carburetor 1, and then to the engine through

intake I. *Id*. As of the critical date, a POSA appreciated that LPG tanks such as Nakafushi's cylinder 16 store the LPG under pressure, which is necessary given LPG's boiling point of approximately -40 °C. *See* Ex. 1001, 1:48-49 (acknowledging that LPG "can be conveniently stored under pressure in a liquid state"); *see also* ¶¶66, 71, above.

c) Element [18.2]

179. Element [18.2] recites "a carburetor coupled to an intake of the engine to mix air and fuel and connect to the liquid fuel line and the gaseous fuel line."

180. Nakafushi discloses carburetor 1 coupled to the intake I that mixes air and fuel. Ex. 1005, ¶[0010], Figs. 1-2; *see* §XII.A.1.c, above. Nakafushi's carburetor 1 connects to both the liquid and gaseous fuel lines through fuel passages 8 and 13, respectively. *Id.*

d) Element [18.3]

181. Element [18.3] recites "a carburetor cutoff solenoid coupled to control fuel flow within the carburetor from the liquid fuel line and selectively engage engine operation on liquid fuel."

182. As discussed previously (§XII.A.1.d, above), Nakafushi's control valve 23 is a "carburetor cutoff" coupled to control liquid fuel flow within the carburetor from the liquid fuel passage 6; when valve 23 is open, the engine operates on liquid fuel. Ex. 1005, ¶[1014]. And as previously explained

(§XII.A.1.d, above), to the extent not expressly disclosed by Nakafushi, it would have been obvious to use a solenoid for Nakafushi's control valve 23, such as that taught by Olmr.

e) Element [18.4]

183. Element [18.4] recites "a gaseous fuel valve coupled to control fuel flow through the gaseous fuel line and selectively engage engine operation on gaseous fuel."

184. Nakafushi discloses LPG cut valve 18, which is a "gaseous fuel valve" coupled to gaseous fuel passageway 13 to selectively operate the engine on gaseous fuel when desired. *See* §§XII.A.1.e and XII.A.2.b, above.

185. Thus, Nakafushi by itself discloses all elements of Claim 18, and in combination with Olmr renders Claim 18 obvious.

B. Ground 2: Claims 4 and 10 are obvious over Nakafushi in view of Olmr and Duffy

186. Claims 4 and 10 of the '034 Patent are obvious for at least the reasons described below.

1. Claim 4

187. Claim 4 depends from Claim 1, and further requires that "the switch actuates the liquid cutoff solenoid to provide fuel overlap when changing engine operation between the liquid fuel and the gaseous fuel."

188. While Nakafushi does not expressly disclose a "fuel overlap," it

would have been obvious to use an electrically controlled solenoid (such as a computer-controlled solenoid) to control the timing of the liquid cutoff, as such solenoids were well-known to a POSA before the date of the invention as were the benefits of managing fuel flows to control the air-fuel ratio fed to the engine.

189. For example, Duffy (published in 1987) teaches that there are computer-controlled solenoids for applications such as controlling the (1) fuel coming into the carburetor fuel bowl (i.e. mixture control solenoid), (2) "fast idle solenoids" for diesel throttle actuation, (3) "cold advance solenoid" for advancing diesel injection timing. Ex. 1016, 11–15. Duffy further explains that computer controlled "mixture control solenoids" are timed to open and close as such to control the fuel/air mixture. *Id*., 11–13. It would have been obvious for someone to use a computer-controlled solenoid (which is an electrically controlled solenoid) to ensure enough fuel overlap when switching fuel sources, as it was well known that mixture control solenoids can be used to precisely control the fuel/air mixture, including when switching from one fuel source to another to avoid too lean or too rich fuel conditions.

190. Below is an excerpt from Duffy (11) demonstrating this concept:

Mixture control solenoid

A *mixture control solenoid* in the computer controlled carburetor responds to electrical signals (or dwell signals) from the computer to alter the air-fuel ratio. The signals trigger the solenoid to open and close air and fuel passages in the carburetor. See Fig. 12-44.

Fig. 12-45 shows two other types of mixture control solenoids. Fig. 12-46 illustrates mixture control solenoid action.

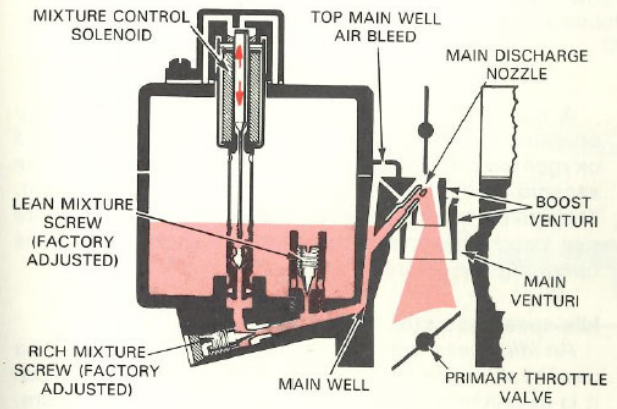

Fig. 12-44. Computer can activate mixture control solenoid in electromechanical carburetor to quickly open or close valve that changes carburetor's air-fuel ratio. Electric pulses from computer move plunger in solenoid. It operates mixture valve. Study how solenoid can regulate fuel flow. (Pontiac)

191. Duffy discloses implementing this using logic circuits and control circuits, as set forth below:

Carburetor control computer

The system computer, usually called the *electronic control unit,* is a small solid-state electronic device. One is shown in Fig. 12-47. This device has both logic circuits (artificial intelligence) and control circuits (power transistors) that are contained in one or more integrated circuit chips.

The electronic control unit (ECU) is capable of receiving information sent to it by sensors located in various places on the automobile. It can process this information and then electronically control the carburetor's mixture control solenoid.

For example, the ECU will receive reports from the oxygen sensor in the exhaust system about the amount of oxygen in the exhaust gas. The ECU, which can do very complicated math in a fraction of a second, compares this signal with the information stored in its memory. If the oxygen makeup of the exhaust gas is not correct, the memory sends a signal to other parts of the ECU. A control signal will then be sent out to the carburetor's mixture solenoid which is energized to adjust the air-fuel mixture for the correct oxygen content in the exhaust gas.

192. A POSA would have been motivated to implement the claimed timing sequence to ensure an appropriate "fuel overlap" when switching fuel sources (e.g., switching from gasoline to LPG) to prevent the engine from stalling or encountering an overly rich air-to-fuel ratio. For example, because Nakafushi's valve 23 is so close to the carburetor (especially as compared to LPG valve 18), a POSA would have been motivated to slightly delay shutting valve 23 upon opening LPG valve 18 to continue providing gasoline fuel for the short period of time required for LPG fuel to nearly reach the carburetor, and only thereafter cutting off the gasoline flow. This arrangement would have been useful for avoiding stalling of the engine that might otherwise occur if the gasoline fuel source is shut off for too long before LPG reaches the engine, to thereby provide a more uniform power output (e.g., for generating a constant source of electricity). A POSA would have also appreciated that more precise control of the gasoline and LPG valves helps ensure a more balanced fuel-air ratio when switching between fuels on the fly, which a POSA would have been motivated to achieve since it was appreciated that proper air-to-fuel ratios are always desired for smooth engine operation.

193. Control circuitry providing for short delays of this nature were well-known, as shown by Duffy (from 1987), and were easily incorporated into Nakafushi's switch 19 and valves because the technology and components were very basic, readily available, and well known at the time of the invention.

Consequently, a POSA knew that maintaining the appropriate air-to-fuel ratio was important for smooth and efficient engine operation, and likewise knew how to control the timing of the solenoid switching when changing fuels to achieve the optimal air-to-fuel ratio (for example, by taking into account exactly how long it takes for one fuel to reach the carburetor when its respective solenoid is opened, such that the other solenoid can be closed at the right moment to mostly or completely avoid fuel overlap). A POSA thus knew to achieve, and knew how to achieve, the best engine operation when switching back and forth between fuel sources, which would have involved nothing more than routine optimization of the air-to-fuel ratio by precisely controlling the timing of the solenoids for each fuel, which optimization a POSA could readily undertake for any given engine design.

2. Claim 10

194. Claim 10 depends from Claim 1, and further requires that "the switch opens the liquid fuel valve to fill the float bowl with liquid fuel prior to actuating the liquid cutoff solenoid to open the liquid fuel path."

195. It would have been obvious to a POSA to utilize Nakafushi's switch to electrically control the timing of the liquid fuel valve opening to occur prior to actuating the liquid cutoff solenoid. Electrically controlled solenoids (including computer-controlled solenoids) were well known to a POSA before the date of the invention, as shown by Duffy. Ex. 1016, 11-15. Such solenoids were used to

precisely control the air-fuel ratio in engines over different operating conditions.

196. A POSA would have been motivated to delay opening the liquid cutoff solenoid until after the liquid fuel valve is opened for a sufficient period to ensure that the float bowl is appropriately filled with gasoline before running the engine on gasoline. This is especially true when the float bowl has been previously drained, such as pursuant to a manufacturer's instructions for example. *See* Ex. 1017, 24 (Instruction 7.b, directing users to empty the float bowl when the engine will not be used for an extended period of time). A POSA would have appreciated that the float bowl must have sufficient gasoline to operate the engine smoothly, as insufficient gasoline in the float bowl risks inadequate fuel supply to the engine upon start-up or when switching from LPG operation back to gasoline.

197. A POSA would have also understood that the flow of gasoline through a carburetor is affected by the negative pressure generated by the air flow at the venturi and by the hydrostatic pressure in the float bowl. The higher the level of liquid gasoline in the float bowl, the higher the hydrostatic pressure at the bottom of the float bowl, and the higher the flow rate of gasoline to the engine. Thus, when the float bowl is not full enough, less gasoline will be delivered to the carburetor intake, resulting in a leaner air-fuel ratio and potentially a stalled engine (if the air-fuel ratio is so lean that the mixture is not ignitable). The importance of maintaining control of the air-fuel ratio was well-known to a POSA.

198. Even if the engine does not stall, insufficient gasoline level in the float bowl can lead to improper air-fuel ratio (i.e. outside normal, expected operation for the engine). Running an engine on a partially full float bowl can cause an improper lean fuel-air mixture to be delivered to the venturi while waiting for the float bowl to fill up. Therefore, a POSA would have been further motivated to adopt the claimed sequencing because repeated operation of the engine with insufficient fuel in the bowl can cause degradation and wear on certain components of the engine.

199. These are basic principles of operating a combustion engine with a carburetor having a float bowl, which I believe a POSA would have understood and appreciated, especially given that combustion engines, including dual-fuel combustion engines, have been known for nearly a century. *See, e.g.*, Ex. 1009.

200. As discussed above, a POSA would have had a reasonable expectation of success in incorporating electrically controlled solenoids to achieve a predefined delay of this nature. *See* XII.B.1, above.

C. Ground 3: Claims 19-23 are obvious over Nakafushi in view of Olmr and Bernhardsson and/or Duffy

201. Claims 19-23 of the ’034 Patent are obvious for at least the reasons described below.

1. Claim 19

202. Claim 19 depends from Claim 18, and further requires “wherein the

gaseous fuel valve comprises a gaseous fuel cutoff solenoid."

203. As previously explained, Nakafushi discloses LPG cut valve 18, which is a "gaseous fuel valve." *See* §XII.A.9.e, above.

204. Bernhardsson discloses a dual-fuel engine with a solenoid valve 42 that cuts off the flow of a gaseous fuel (such as LPG) from the container 40 to the carburetor:

> The system 4 for supplying a gaseous fuel, e.g. LPG (Liquefied Petroleum Gas) or natural gas, includes a container 40 in which the gas assumes liquid form under pressure. ***The container 40 is connected to a vaporizer 43 via a solenoid valve 42 and a pipe 41***. ***The valve 42 can be operated for opening or closing said pipe connection 41 by manual actuation of the electrical system 5***. - Heat is supplied to the vaporizer 43 from the ordinary cooling system 45 of the engine via a pipe 46, and gas supplied in liquid form to the vaporizer 43 is successively transformed into gas. The gas flows via a pipe 47 and a quantity adjustment valve 48 through the annular gas nozzle 8 into the passage 22 leading to the engine 1. A fuel-air mixture intended for combustion in the engine occurs by mixture with passing inlet air.

Ex. 1008, 2:58–3:4 (emphasis added).

205. Bernhardsson's annotated Figure 1 is shown below:

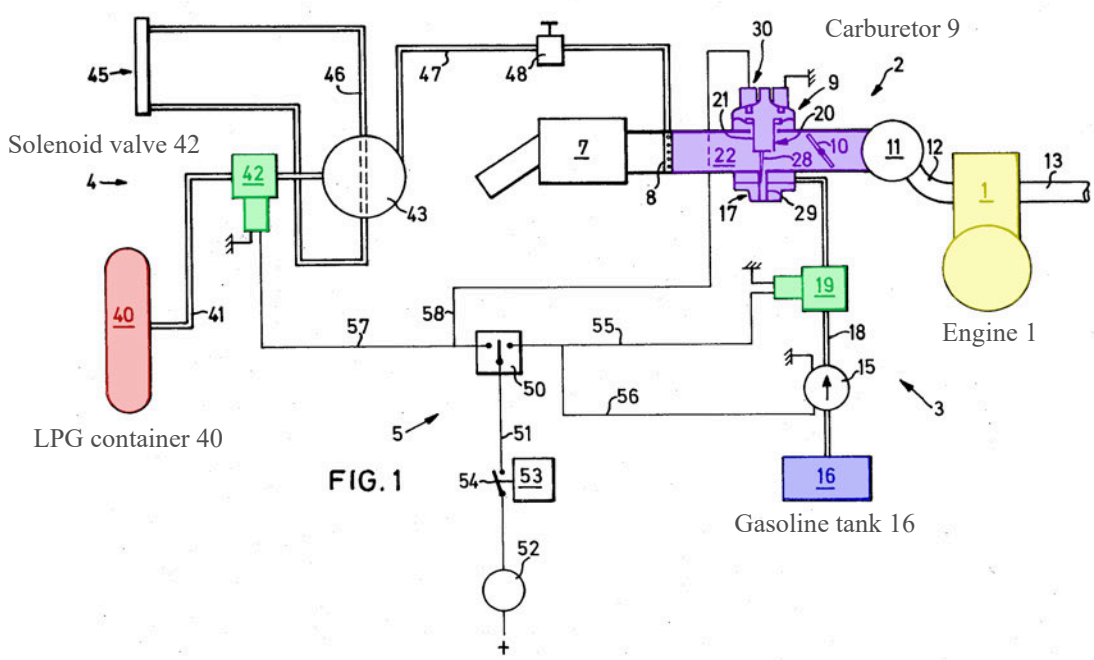

Id., Fig. 1 (coloring and annotations added).

206. Nakafushi does not expressly describe the mechanism that serves as its cut valve 18. However, a POSA would have found it obvious to use a solenoid, such as Bernhardsson's solenoid, for Nakafushi's LPG cut valve 18, as further explained below.

a) Motivation to Combine Nakafushi with Bernhardsson

207. Bernhardsson and Nakafushi both relate to dual fuel engines for alternative operation on liquid or gaseous fuel and both disclose cut-off valves shortly downstream of the gaseous fuel containers. While Nakafushi is silent on the exact type of mechanism that serves as its gaseous fuel cut valve 18, Bernhardsson discloses using a solenoid valve (i.e. valve 42) for cutting off the flow of LPG from container 40 to carburetor 9. Ex. 1008, 2:58-68, Fig. 1.

208. Thus, Bernhardsson discloses an exemplary valve type, a solenoid, for carrying out the same function as the LPG cut valve 18 in Nakafushi.

209. Solenoid valves were widely used at the time of the invention. *See* Ex. 1019, 4 ("Solenoids are widely used to produce linear movement to actuate valves (solenoid valves) and other devices."). As discussed previously, a POSA would have appreciated various benefits of using a solenoid valve in the context of a liquid cutoff (e.g. precise control, rapid response, reliability, and easy electrical integration) (*See* §XII.A.1.d.), A POSA would have appreciated that these various benefits also apply to using a solenoid valve in the context of a gaseous cutoff solenoid in an engine.

210. For these same reasons, a POSA would have been motivated to implement Bernhardsson's solenoid valve as the mechanism for Nakafushi's gaseous fuel cut valve 18.

b) Reasonable Expectation of Success

211. A POSA would have had a reasonable expectation of success in using the solenoid valve 42 of Bernhardsson for the cut valve 18 of Nakafushi.

212. At the time of the invention, solenoids valves were widely used. *See* Ex. 1019, 4 ("Solenoids are widely used to produce linear movement to actuate valves (solenoid valves) and other devices."). The use of solenoid valves to cut off the flow of fuel to an engine was also ubiquitous, with Olmr and the Kubota

Workshop Manual (for the DF972 engine) being examples. Ex. 1012, 68 (showing a "LPG Cut Off Solenoid" used in a carburetor); Ex. 1007, 1:33–48, 2:30–42, Fig. 2; § XII.A.1.d, above.

213. Furthermore, Nakafushi discloses a simple electrical circuit to open and close the LPG cut valve 18. Ex. 1005, ¶¶[0013]–[0014], Fig. 1. As described previously (*see* § VII.C), a solenoid is essentially a coil of wire that generates a magnetic field when an electric current passes through it. This magnetic field can be used to move a plunger or core inside the coil.

214. To control a solenoid with a simple circuit, a POSA would typically need a power source and a switch. Nakafushi's electrical circuit includes these basic components. *See id*., Fig. 1 (disclosing a LPG cut valve 18 connected to a fuel switching switch 19 and a battery 21).

FIG. 1

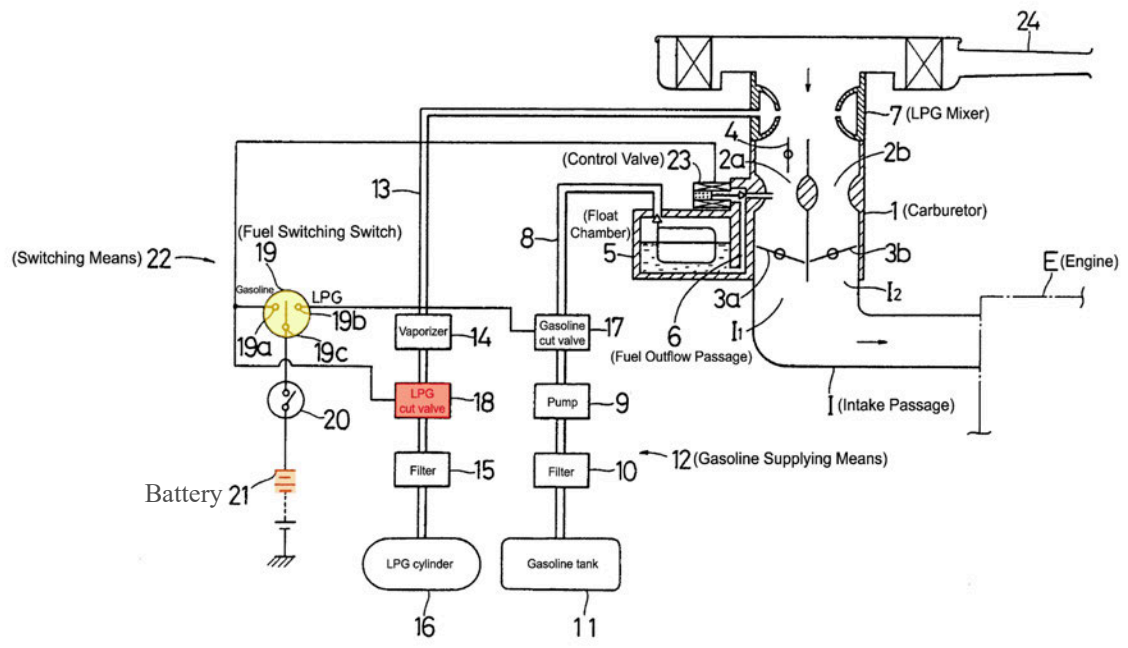

Ex. 1005, Fig. 1 (coloring and annotation added).

215. Bernhardsson likewise teaches an electrical circuit for operating its solenoid valve that includes a switch (i.e. "selector 50") and a power source (i.e. "current"). *See* Ex. 1008, 3:5–10 ("By manual actuation of the electrical system 5 it is possible to control switching between gas and petrol operation. In consideration of this, there is a manually operable selector 50 which is supplied with current via a connection 51 connecting the selector 50 with the vehicle ignition switch 52.").

216. A POSA would have reasonably expected to use the same electrical circuit of Nakafushi to energize a solenoid valve (such as the solenoid valve 42 disclosed in Bernhardsson) to open and close in the manner called for by Nakafushi

in regards to its LPG cut valve 18. *Id*. Given their ubiquitous use for such purposes, a POSA would have reasonably expected a solenoid valve to be successful in cutting off the supply of LPG from Nakafushi's LPG cylinder 16 and the carburetor. *Id*.

217. Thus, Nakafushi in combination with Olmr and Bernhardsson renders Claim 19 obvious.

2. Claim 20

218. Claim 20 depends from Claim 19, and further requires "a switch to change operation of the engine from liquid fuel to gaseous fuel and from gaseous fuel to liquid fuel while the engine is running."

219. As explained previously, the operation of Nakafushi's fuel switching switch 19 changes the engine operation from LPG to gasoline and vice versa "while the engine is running." *See* §XII.A.1.f, above.

220. Thus, Nakafushi in combination with Olmr and Bernhardsson renders Claim 20 obvious.

3. Claim 21

221. Claim 21 depends from Claim 20, and further requires "the switch institutes a predefined delay between actuating the carburetor cutoff solenoid and the gaseous fuel cutoff solenoid."

222. While Nakafushi does not expressly disclose a predefined delay, it

would have been obvious to a POSA to add a time-delay circuit to the carburetor cutoff solenoid to implement a "predefined delay" for the same reasons explained previously. *See* §§ XII.B.1–2, above. A POSA would be motivated to include timing delays in the actuation of the solenoid valves to optimize the fuel to air ratio when switching fuels.

4. Claim 22

223. Claim 22 depends from Claim 20, and further requires "wherein the switch operates the carburetor cutoff solenoid and the gaseous fuel cutoff solenoid to substantially prevent simultaneous fuel delivery of the liquid fuel and the gaseous fuel to the engine."

224. As explained previously, Nakafushi's switch 19 "substantially prevent[s] simultaneous fuel delivery of the liquid fuel and the gaseous fuel to the engine." *See* §§XII.A.3 and XII.A.5, above. This would remain true when using solenoids for the liquid and gas cutoffs, as disclosed by Olmr and Bernhardsson. *See* §§XII.A.1.d and XII.C.1, above.

225. Thus, Nakafushi in combination with Olmr and Bernhardsson renders Claim 20 obvious.

5. Claim 23

226. Claim 23 depends from Claim 20, and further requires "the gaseous fuel cutoff solenoid and the carburetor cutoff solenoid operate as normally closed

solenoid valves."

227. The carburetor cutoff of Nakafushi is normally closed. Ex. 1004, ¶[0014]. As discussed previously, it would have been obvious based on the teachings of Olmr to use a solenoid for this valve. *See* §XII.A.1.d. While Nakafushi teaches a normally opened gaseous fuel cutoff, it would have been obvious to a POSA to configure it as normally closed. Bernhardsson discloses a gaseous fuel cutoff solenoid that is normally closed (Ex. 1008, 3:65-4:17), and the decision to configure a solenoid as normally open or normally closed is mere design choice.

228. A POSA would have been further motivated to utilize a normally-closed LPG solenoid for safety reasons, such that if power is lost for some reason (such as a dead battery or a component failure), the fuel valve reverts to its closed position and prevents any further flow of fuel subsequent to the power outage or component failure. Replacing Nakafushi's normally-open LPG valve with the normally-closed solenoid of Bernhardsson would have been a simple substitution that would merely involve rewiring Nakafushi's control circuit to account for the normally closed valve, specifically by wiring the control circuit such that when Nakafushi's fuel selector switch is set to LPG, the switch sends a power signal to the LPG solenoid to open it.

229. A POSA would have a reasonable expectation of success in using normally closed solenoids, as taught by Bernhardsson for example, because such

solenoids had been in use in engines (including engines similar to Nakafushi) long before the filing date of the ’034 Patent. Ex. 1016, 5. Furthermore, a POSA would know that a normally closed solenoid valve would work just as well to electrically control the flow of fuel as a normally open solenoid valve with just a simple wiring change.

D. Ground 4: Claims 11-13 and 16-17 are obvious over Nakafushi in view of Jungmann and Parlatore

230. Claims 11-13 and 16-17 of the ’034 Patent are obvious in view of Nakafushi, Jungmann and Parlatore, for at least the reasons described below.

1. Claim 11

a) Element [11.0]

231. Nakafushi discloses a multi-fuel engine and fuel delivery system. *See* §XII.A.1.a, above.

232. Jungmann discloses using an engine with a fuel-delivery system in a generator:

> One embodiment of the invention relates to ***a generator including*** an enclosure, ***an internal combustion engine*** provided within the enclosure, an alternator provided within the enclosure and driven by the internal combustion engine, ***a fuel supply line for providing fuel to the internal combustion engine, a valve for selectively closing the fuel supply line***, the valve biased to a normally closed position, a controller configured to provide a signal

> to maintain the valve in an open position, and a temperature responsive device configured to provide a signal to maintain the valve in an open position, and a temperature responsive device configured to interrupt the signal from the controller to the valve upon exposure to a threshold temperature, thereby resulting in the closing of the valve.

Ex. 1011, ¶[0002] (emphasis added).

233. As of the priority date, it was common to use an internal combustion engine in a generator. In fact, a POSA would be aware that an engine is a crucial component of most generators.

> Portable generators for producing electricity are well known and have been commercially available for many years. ***These devices typically include an internal combustion engine***, are designed to generate sufficient electrical power to run one or more common household or commercial electronic devices, and typically use gasoline as fuel.

See e.g., Ex. 1020, 1:5–10.

234. In view of Jungmann, a POSA would have found it obvious to use Nakafushi's engine in a generator.

(1) Motivation to Combine / Expectation of Success

235. A POSA would have been motivated to use Nakafushi's engine in a

generator so that gasoline or LPG could be used as a fuel source while generating electricity for the user.

236. Jungmann specifically discloses the use of propane, natural gas, gasoline, or diesel fuel in a combustion engine being used in a generator:

> According to one exemplary embodiment, the engine 12 is an internal combustion engine that consumes a fuel such as ***propane or natural gas*** from a fuel supply line 16. . . . In other embodiments, the engine 12 may consume other types of fuel, such as ***gasoline or diesel fuel***.

Ex. 1011, ¶[0015]; *see also* Ex. 1020, 4:7–11 ("A gasoline or propane generator is a generator including a carburetor and manual choke, which operates most efficiently using gasoline or propane, respectively, when the choke is placed in the fully open position, after the generator has been started.").

237. A POSA would understand that using an internal combustion engine, such as that disclosed by Nakafushi, to power a generator (as shown in Jungmann) offers various advantages.

238. For example, internal combustion engines are comparatively compact and lightweight for the power they are able to deliver, making them especially ideal for portable applications, such as portable generators.

239. Internal combustion engines also run on fuels, such as propane and/or gasoline, that are common and widely available. This ensures that refueling is

convenient to a user and that the generator can be used in various locations without special infrastructure, since both gasoline and gaseous fuels such as LPG and natural gas are widely available.

240. Internal combustion engines are also a cost-effective way to provide significant power output relative to their size.

241. Internal combustion engines are also durable and reliable. With proper maintenance, they can operate efficiently for years.

242. And finally, internal combustion engines are easy to use; starting an internal combustion engine is straightforward, often requiring just a pull-start or a key ignition.

243. Because a POSA would have been aware of all of these benefits at the time of the invention, it would have been obvious to a POSA to use the internal combustion engine disclosed in Nakafushi to power a generator, as shown in Jungmann.

244. Purposing Nakafushi's engine for use in/as a generator would have involved nothing more than a simple substitution, whereby Nakafushi's engine is used in place of Jungmann's engine, with no surprising or unexpected results since the benefits of dual-fuel engines were already well-known in the art.

245. A POSA would also have had a reasonable expectation of success in using Nakafushi's multi-fuel engine in a generator given that this implementation

was already demonstrated by Jungmann. Using Nakafushi's engine in a generator would be implemented in the same way as the engine is used in a generator as disclosed in Jungmann. *Id.*, ¶¶[1014]–[1015].

246. As one specific example, Nakafushi's engine could be used in a generator simply by adding an alternator to the engine, as was already common and well known by that time (for example, alternators are commonly combined with car engines to generate electricity, and generators driven by internal combustion engines were commonly sold at hardware stores well before the priority date). A POSA was well aware of how common it was for a combustion engine to produce electricity and thus function as a generator. A POSA would similarly appreciate how a combustion engine would produce electricity and function as a generator. This is illustrated by Jungmann. Ex. 1011, ¶[0002].

b) Element [11.1]

247. Element [11.1] recites "a multi-fuel internal combustion engine configured to operate on a liquid fuel supplied from a liquid fuel source through a liquid fuel line and a gaseous fuel supplied from a pressurized fuel source through a gaseous fuel line." As previously discussed, Nakafushi discloses this limitation. *See* §XII.A.9.b, above.

c) Element [11.2]

248. Element [11.2] recites "an alternator driven by the multi-fuel internal

combustion engine." Jungmann discloses an alternator driven by an internal combustion engine:

> One embodiment of the invention relates to a generator including an enclosure, an internal combustion engine provided within the enclosure, ***an alternator provided within the enclosure and driven by the internal combustion engine***, [and] a fuel supply line for providing fuel to the internal combustion engine….

Ex. 1011, ¶[0002] (emphasis added).

249. Indeed, alternators are common components in generators. *See* Ex. 1019, 5 ("**alternator** A relatively small electrical generator, usually driven by an internal-combustion engine to operate its ignition and charge the battery"). As previously explained, a POSA would have found it obvious to incorporate the alternator from Jungmann with the dual-engine in Nakafushi to facilitate using Nakafushi in a generator. *See* §XII.D.1.a, above.

d) Element [11.3]

250. Element [11.3] recites "a fuel regulator system." According to the '034 Patent, the "fuel regulator system":

> includes one or more pressure regulators that reduce and control the pressure of the fuel from pressurized fuel container [] and delivers fuel at a desired pressure for operation of the engine.

Ex. 1001, 4:10–13.

251. Nakafushi discloses vaporizer 14 for vaporizing the LPG prior to being delivered to the carburetor:

> Furthermore, the LPG mixer 7 is communicated with an LPG bomb [sic: cylinder] 16 as an LPG supplying means by an LPG supplying passage 13 via a ***vaporizer 14 for vaporizing LPG*** and a filter 15. . . .
>
> Furthermore, a gasoline cut valve 17 configured to close the gasoline supplying passage 8 in response to a cut signal (described later) is provided in the gasoline supplying passage 8 so as to intervene between the float chamber 5 and the pump 9. On the other hand, an LPG cut valve 18 configured to close the LPG supplying passage 13 in response to a cut signal (described later) is provided in the LPG supplying passage 13 so as to intervene between the ***vaporizer 14*** and the filter 15.

Ex. 1005, ¶¶[0012]-[0013] (emphasis added). Nakafushi's vaporizer is depicted in Figure 1:

FIG. 1

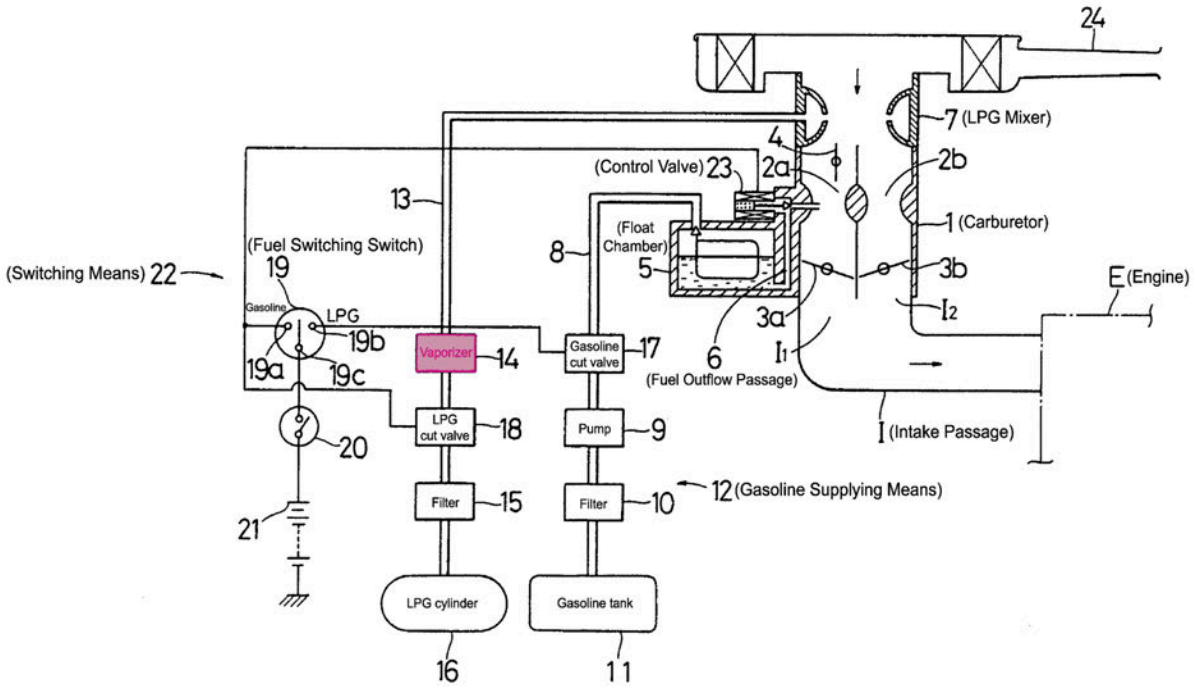

Id., Fig. 1 (coloring added).

252. A POSA would have appreciated that the "vaporizer" in Nakafushi is a device that turns liquid fuel into vapor/gas, and regulates the pressure of the gas being delivered to the engine for operation with the pressurized LPG fuels source. Indeed, LPG is stored as a liquid and is converted to a gas (i.e. vaporized) by regulating the pressure. Thus, Nakafushi's vaporizer 15 constitutes the claimed "fuel regulator system."

253. Moreover, LPG vaporizers such as those disclosed by Nakafushi were well-known in the art to comprise dual-stage pressure regulators.

254. For example, Parlatore teaches providing fuel to an engine by

vaporizing LPG in a first regulator, followed by flow through a second regulator to regulate the pressure of the gaseous fuel that moves on to the engine:

> One exemplary embodiment describes a fuel delivery system. The fuel delivery system may include a fuel tank that houses propane; ***a first regulator coupled to the fuel tank; a second regulator coupled to the first regulator***; and a fuel metering system coupled to the second regulator and delivering propane to an engine.
>
> Another exemplary embodiment can include a method for providing fuel to an engine. The method for providing fuel to an engine can include storing liquid propane in a tank; flowing the liquid propane to a first regulator; converting the liquid propane to a propane vapor by the first regulator; flowing the propane vapor to a second regulator; metering the flow of the propane vapor from the second regulator to an engine; and maintaining the temperature of the propane at about an ambient temperature.

Ex. 1010, ¶¶[0005]-[0006] (emphasis added). Parlatore further teaches that:

> In a further exemplary embodiment, ***the LPG tank 102 may be connected to a regulator, such as a primary regulator 106, converter or vaporizer***. This connection may be made using a hose 104, such as a high pressure hose, or any form of pipe, for example a rigid pipe. The primary regulator 106 may step down the pressure of any stored propane vapor energy in tank 102, and may further

> output this lowered pressure to a secondary regulator 110. For example, ***the primary regulator 106 may be such that it reduces pressure of the propane from a high pressure state*** while the propane is in the LPG tank 102, which may be approximately 180-250 psi, ***to a sub-atmospheric pressure***, approximately 10 psi. The secondary regulator 110 can act as a vacuum-controlled flow rate regulator. Further, ***the secondary regulator 110 can meter propane gas to an engine 116***, for example, through a negative pressure signal, such as a vacuum signal, from the air-fuel mixer on a carburetor 114 designed or modified to use propane as a fuel source.

Id., ¶[0016] (emphasis added). Parlatore's Figure 1 shows an exemplary flow of gaseous fuel to supply the engine from a storage tank:

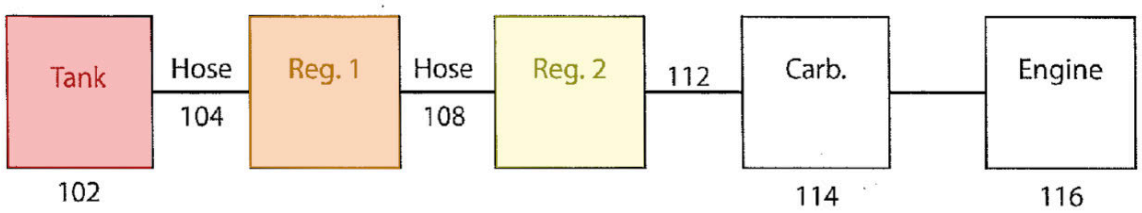

Fig. 1

Id., Fig. 1.

255. As disclosed, the first regulator (Reg. 1) acts as the main step-down pressure regulator, while the second (Reg. 2) acts as the flow meter to the engine. *Id.*, ¶¶[0016]-[0017].

256. Parlatore further discloses that the primary and secondary regulators may be combined as a single, two-stage, regulator to feed the vaporized propane into the carburetor:

> In further exemplary embodiments, and referring to FIG. 2, the regulator arrangement of the primary regulator 106 and the secondary regulator 110 ***may be such that they are combined as a single, two-stage, regulator 202***. In this exemplary embodiment the combined regulator 202 would then feed the vaporized propane into carburetor 114 through hose 112. Additionally, as shown in exemplary FIG. 2, LPG tank 200, in some examples, may be coupled directly to engine 116, using any desired coupling, such as mounting bracket 204.

Id., ¶[0018] (emphasis added); *see also id.* Fig. 2 (two-stage regulator 202).

257. Parlatore also teaches that its two-stage fuel regulator system avoids freezing of traditional (single-stage) regulators/vaporizers without relying on a heat-control circuit from the engine:

> Other attempted solutions, for example the use of liquid propane delivery systems, have not proved successful. In such uses of propane, the ***vaporization of propane from its liquid state causes a significant amount of heat to be absorbed, ultimately freezing the regulator through which the propane flows from a tank to the engine and rendering the engine inoperable***.

Id., ¶¶[[0004] (emphasis added). Parlatore further adds:

> In each of the exemplary embodiments described herein the arrangement of the regulators 106 and 110, 202 and 304 and 308, as shown in FIGS. 1-3, respectively, can maintain about an ambient temperature from the surrounding air temperature rather than utilizing an interface with a cooling circuit of the engine 116 or other heat source to function as desired. In some other exemplary embodiments, the temperature maintained by any regulators described herein may be such that the flow of propane is allowed as desired. This may be accomplished as a result of the vapor delivery nature of the system as well as a design match of the system to fit specific air-fuel requirements of an engine size, for example for a marine engine. The maintenance of the regulator at about an ambient temperature may be facilitated by both the design of the regulator or regulators which may be sized to a specific engine, for example a marine engine having a known or desired horsepower rating. Additionally, the maintenance of the about ambient temperature may be such that the regulator or regulators are not affected, for example, by freezing as a result of the conversion of the LPG from tank 102 to a gaseous state and the flow of the fuel is not negatively affected or impacted.

Id., ¶[0022]. Parlatore thus teaches (and shows that a POSA understood) that the primary and secondary LPG regulators can be appropriately sized to avoid excessive cooling/freezing, which helpfully thereby avoids the need for using a warming stream of coolant from the engine to maintain operational temperatures within the regulators. This is one reason why Parlatore's regulators can be located remote from the engine, since engine heat is not needed to maintain the regulators' operation.

258. Jungmann also teaches a fuel regulator system, disclosing that "[t]he fuel supply line 16 may deliver fuel regulator 28 that controls the flow of fuel to the engine 12." Ex. 1011, ¶[0017]. A POSA would thus have also understood Jungmann's fuel regulator 28 to constitute the claimed "fuel regulator system" since it reduces and controls the fuel from the pressurized fuel container and delivers it at the desired pressure for operation of the engine.

259. To the extent not sufficiently disclosed by Nakafushi or Jungmann, it would have been obvious to a POSA to incorporate Parlatore's dual-stage fuel regulator system into the engine of Nakafushi (as well as an alternator, as exemplified by Jungmann) to regulate the LPG gas pressure supplied to Nakafushi's engine when operating on LPG.

(1) Motivation to Combine / Expectation of Success

260. To the extent Nakafushi itself does not disclose this limitation, a

POSA would have been motivated to utilize Parlatore's fuel regulator system with Nakafushi's engine for several reasons.

261. First, Nakafushi discloses vaporizer 14 along the LPG supply line. If Nakafushi's vaporizer had only a single stage, it could freeze during use due to the cooling that occurs when a liquid evaporates and when a gas expands (i.e. drops in pressure). *See* Ex. 1010, ¶[0004].

262. While such freezing may be prevented by routing a source of heat to the vaporizer, such as by using the engine cooling system (*see, e.g.*, *id*., ¶[0022]), such systems are more costly to design and build and more complicated to operate.

263. Parlatore's dual-stage fuel regulator system solves this problem by achieving the vaporization and expansion in phases and by using appropriately sized regulators, first stepping down the pressure somewhat when vaporizing the LPG in the first regulator, and then further reducing the pressure when metering the flow of fuel to the engine more precisely with the second stage regulator, as described:

> One exemplary embodiment describes a fuel delivery system. The fuel delivery system may include a fuel tank that houses propane; ***a first regulator coupled to the fuel tank; a second regulator coupled to the first regulator***; and a fuel metering system coupled to the second regulator and delivering propane to an engine.

Another exemplary embodiment can include a method for providing fuel to an engine. The method for providing fuel to an engine can include storing liquid propane in a tank; flowing the liquid propane to a first regulator; ***converting the liquid propane to a propane vapor by the first regulator; flowing the propane vapor to a second regulator; metering the flow of the propane vapor from the second regulator to an engine***; and maintaining the temperature of the propane at about an ambient temperature.

. . .

In a further exemplary embodiment, ***the LPG tank 102 may be connected to a regulator, such as a primary regulator 106, converter or vaporizer***. This connection may be made using a hose 104, such as a high pressure hose, or any form of pipe, for example a rigid pipe. ***The primary regulator 106 may step down the pressure of any stored propane vapor energy in tank 102, and may further output this lowered pressure to a secondary regulator 110***. For example, the primary regulator 106 may be such that it reduces pressure of the propane from a high pressure state while the propane is in the LPG tank 102, which may be approximately 180-250 psi, to a sub-atmospheric pressure, approximately 10 psi. The secondary regulator 110 can act as a vacuum-controlled flow rate regulator. Further, the secondary regulator 110

> can meter propane gas to an engine 116, for example, through a negative pressure signal, such as a vacuum signal, from the air-fuel mixer on a carburetor 114 designed or modified to use propane as a fuel source.

Id., ¶¶[0005]-[0006], [0016](emphasis added).

264. Thus, a POSA would have been motivated to utilize Parlatore's fuel regulator system in Nakafushi's engine to avoid regulator freezing and/or the need for a heat source, while maintaining better reliability and control over the metering of LGP fuel to the engine.

265. A POSA would have had a reasonable expectation of success using Parlatore's dual-stage fuel regulator system with the engine of Nakafushi (as modified with an alternator to form a generator per Jungmann) because it would have involved nothing more than replacing Nakafushi's vaporizer 14 with Parlatore's dual-stage regulator 202 (Fig. 2) or its primary and secondary regulators 304 and 308 (Fig. 3) to achieve the same function of vaporizing the LPG and providing it to the engine at the desired pressure. Indeed, Parlatore expressly states that its fuel regulator system can be implemented in generators.

> The exemplary embodiment shown in FIG. 2 may be utilized in any desired situation, such on a small or single-cylinder outboard engine. The mounting of LPG tank 200 on the engine may provide many advantages. For example, this embodiment may be beneficial in some desired

> situations, for example when utilizing compact fuel supplies on a general yacht tender service or for any other similar-sized application, ***such as generators*** or personal watercraft where storage space or space of a fuel tank may be limited.

Id., ¶[0019] (emphasis added).

e) Element [11.4]

266. Element [11.4] recites "a primary pressure regulator coupled to a service valve of the pressurized fuel source to regulate fuel supplied from the pressurized fuel source to a reduced pressure."

267. Parlatore discloses a primary regulator 304 coupled to service valve 316 of the pressurized propane tank 300, explaining:

> In still further exemplary embodiments, and referring to FIG. 3, the LPG tank 300 may be located separate, but coupled to, an engine 310. ***The LPG tank 300 may be connected to the primary regulator 304*** as described previously, for example by connector 302. Additionally, a low pressure output of the secondary regulator 308 may be attached to a propane carburetor (not pictured) on the engine 310 in any of a variety of manners, for example through hose 312 and coupling 314. Further, a low pressure output of the secondary regulator 308 may be attached to the propane carburetor either permanently or releasably.

Still referring to exemplary FIG. 3, the primary regulator 304 and the secondary regulator 308 may be two separate regulators that can be based on the design and size of an engine. The primary regulator 304 in this exemplary embodiment may be connected to LPG tank 300 as described above. Additionally, the primary regulator 304 may be connected to the secondary regulator 308 by a hose 306, pipe, tube or the like, such as that described above.

In each of the exemplary embodiments described herein the arrangement of the regulators 106 and 110, 202 and 304 and 308, as shown in FIGS. 1-3, respectively, can maintain about an ambient temperature from the surrounding air temperature rather than utilizing an interface with a cooling circuit of the engine 116 or other heat source to function as desired. In some other exemplary embodiments, the temperature maintained by any regulators described herein may be such that the flow of propane is allowed as desired. This may be accomplished as a result of the vapor delivery nature of the system as well as a design match of the system to fit specific air-fuel requirements of an engine size, for example for a marine engine. The maintenance of the regulator at about an ambient temperature may be facilitated by both the design of the regulator or regulators which may be sized to a specific engine, for example a marine engine having a known or desired horsepower

> rating. Additionally, the maintenance of the about ambient temperature may be such that the regulator or regulators are not affected, for example, by freezing as a result of the conversion of the LPG from tank 102 to a gaseous state and the flow of the fuel is not negatively affected or impacted.
>
> In still further examples, any of the embodiments described herein may include a fuel shut-off valve, such as a safety fuel shut-off valve 316 or switch. For example, a standard propane tank shut-off valve may be utilized in some embodiments. Additionally, in other embodiments, such as embodiments where a larger, electrically actuated engine is utilized, an electric solenoid shut-off valve may be used.

Id., ¶¶[0020]-[0023] (emphasis added). An exemplary embodiment showing Parlatore's primary regulator 304 coupled to the LPG tank's service valve 316 is seen in Figure 3. An exemplary embodiment showing Parlatore's dual-stage regulator 202 coupled to the outlet of LPG tank 200 is seen in Figure 2.

268. Specifically, regulator 304 regulates the propane to a reduced pressure:

> The primary regulator 106 may step down the pressure of any stored propane vapor energy in tank 102, and may further output this lowered pressure to a secondary regulator 110.

Id., ¶[0016]. As seen in Figure 3 below, Parlatore's primary regulator is connected directly to the LPG source:

> In still further exemplary embodiments, and referring to FIG. 3, the LPG tank 300 may be located separate, but coupled to, an engine 310. ***The LPG tank 300 may be connected to the primary regulator 304*** as described previously, for example by connector 302. Additionally, a low pressure output of the secondary regulator 308 may be attached to a propane carburetor (not pictured) on the engine 310 in any of a variety of manners, for example through hose 312 and coupling 314. Further, a low pressure output of the secondary regulator 308 may be attached to the propane carburetor either permanently or releasably.

Id., ¶[0020] (referring to the "primary regulator 304, as described previously [as primary regulator 106]") (emphasis added).

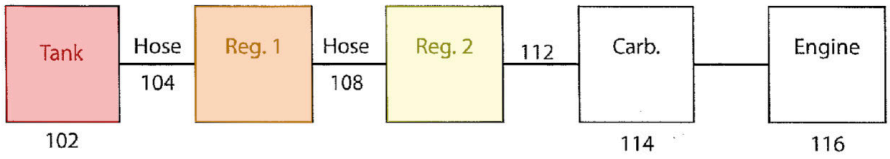

Fig. 1

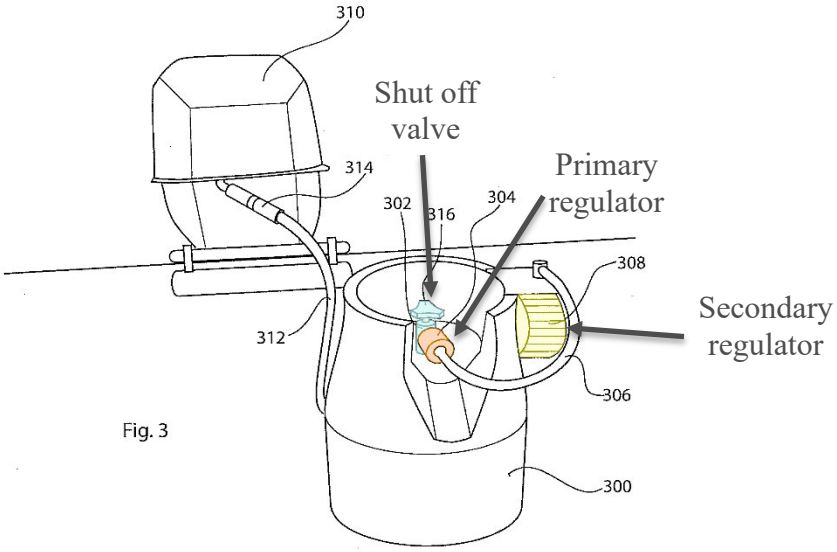

Fig. 3

Id., Figs. 1, 3 (coloring and annotations added).

269. Parlatore thus discloses Element [11.4]. Parlatore's fuel regulator system, comprising either the primary and secondary regulators 304 and 308, or the dual-stage regulator 202, would have been obvious to incorporate into Nakafushi's engine as previously discussed. *See* §XII.D.1.d, above. Similarly, LPG tanks having service valves were well-known and ubiquitous at the time of the invention. As such, it would have been obvious to a POSA to likewise use Parlatore's LPG tank 300 along with its shut off valve 316 and connected

regulators 304 and 308 with Nakafushi's engine, or the same configuration with respect to regulator 202 and LPG tank 200.

270. This would have involved nothing more than using Parlatore's LPG tank configuration as the LPG fuel source for Nakafushi, with each performing their intended function without any unexpected results.

f) Element [11.5]

271. Element [11.5] recites "a secondary pressure regulator coupled to the primary pressure regulator to regulate fuel supplied from the primary pressure regulator to a desired pressure for delivery through the gaseous fuel line to operate the engine."

272. Parlatore discloses secondary pressure regulator 308, coupled to the primary pressure regulator 304, that regulates the propane to a low pressure for feeding through hose 312 to the propane carburetor on the engine.

> In still further exemplary embodiments, and referring to FIG. 3, the LPG tank 300 may be located separate, but coupled to, an engine 310. The LPG tank 300 may be connected to the primary regulator 304 as described previously, for example by connector 302. Additionally, a low pressure output of the ***secondary regulator 308 may be attached to a propane carburetor (not pictured) on the engine 310*** in any of a variety of manners, for example ***through hose 312*** and coupling 314. Further, a low pressure output of the secondary regulator 308 may be

> attached to the propane carburetor either permanently or releasably.

Id., ¶[0020] (emphasis added).

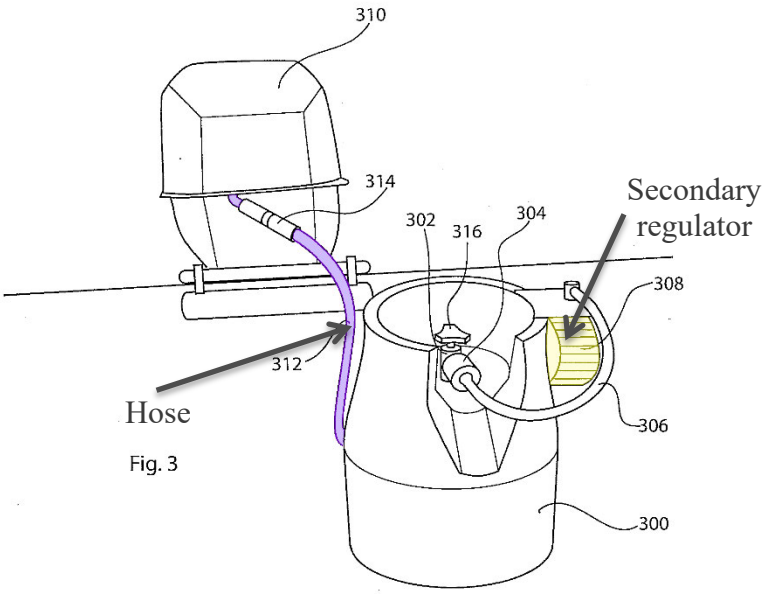

Fig. 3

Id., Fig. 3 (annotated); *see also id*., ¶¶[0005]-[0006], [0016]-[0017]. Parlatore's dual-stage regulator 202 likewise comprises a secondary regulator in the form of its second stage, which then feeds vaporized propane into the carburetor. *Id*., ¶¶[0018], [0022], Figs. 1-2.

273. Parlatore's fuel regulator system, including its secondary regulator 308 or its dual-stage regulator 202 as described above, would have been obvious to incorporate into Nakafushi to provide gaseous LPG fuel to the engine at the desired pressure via a gaseous fuel line (i.e., where Parlatore's hose 312 (or hose 112 (*see id*., Fig. 1)) replicates Nakafushi's gaseous fuel passage 13) for the same

reasons discussed previously. *See* §§XII.D.1.d-e, above.

g) Element [11.6]

274. Element [11.6] recites "an electro-mechanical valve system coupled to the engine and operated by an electrical switch powered by one of the alternator, a battery, and a magneto that controls fuel flow to the engine from the liquid fuel source and the pressurized fuel source."

275. Nakafushi discloses an electro-mechanical valve system coupled to an engine that controls liquid and pressurized gas fuel flow via operation by an electrical switch (fuel switching switch 19) that is powered by battery 21:

> Furthermore, a gasoline cut valve 17 configured to close the gasoline supplying passage 8 in response to a cut signal (described later) is provided in the gasoline supplying passage 8 so as to intervene between the float chamber 5 and the pump 9. On the other hand, an LPG cut valve 18 configured to close the LPG supplying passage 13 in response to a cut signal (described later) is provided in the LPG supplying passage 13 so as to intervene between the vaporizer 14 and the filter 15. ***Both of the cut valves 17 and 18 are connected to a gasoline-side contact point 19a and an LPG side contact point 19b of a two-pole fuel switching switch 19, respectively, and a switching means 22 in which a common contact point 19a of the fuel switching switch 19 is connected to a battery 21 via an ignition switch 20.*** When the ignition switch 20 is turned

ON, when the engine E is operated as a gasoline engine, the fuel switching switch 19 is switched to the gasoline-side contact point 19a and a cut signal is input to the LPG cut valve 18 to block the supply of LPG to the LPG mixer 7 and operate the gasoline supplying means 12 to supply gasoline to the carburetor 1, whereas when the engine E is operated as an LPG engine, the fuel switching switch 19 is switched to the LPG side contact point 19b and a cut signal is input to the gasoline cut valve 17, whereby the gasoline supply to the carburetor 1 is blocked, and an LPG supplying means (LPG bomb) 16 is operated to switch so as to supply LPG to the LPG mixer 10, is provided.

Furthermore, a control valve 23 configured to open and close the fuel outflow passage 6 is disposed so as to intervene in the fuel outflow passage 6. ***the control valve 23 is connected to the gasoline contact point 19a of the fuel switching switch 19, and is configured so that when the fuel switching switch 19 is switched to the gasoline contact point 19a side***, that is, when the operation of the gasoline supplying means 12 is selected, ***the control valve 23 is turned ON*** upon receiving a cut signal to open the fuel outflow passage 6, thereby allowing the gasoline to be sucked from the float chamber 5 to the Venturi portions 2a and 2b, whereas ***when the fuel switching switch 19 is switched to the LPG contact point 19b side***, that is, when the operation of the LPG bomb 16 is selected, ***the control***

> ***valve 23 is turned OFF*** by not receiving a cut signal to close the fuel outflow passage 6, thereby blocking the suction of the gasoline from the float chamber 5 to the Venturi portions 2a and 2b.

Ex. 1005, ¶¶[0013]-[0014]. This arrangement can be seen in Figure 1:

FIG. 1

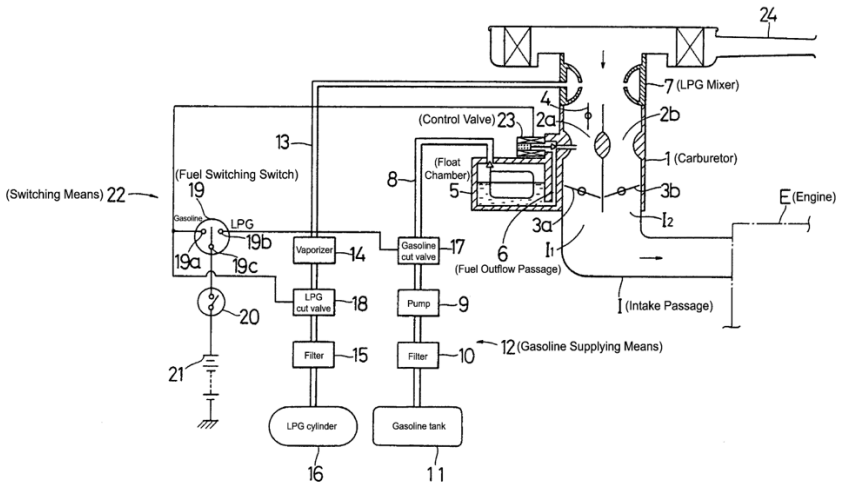

Id., Fig. 1.

276. The fuel switching switch 19 selectively connects or disconnects the valves (i.e., gasoline cut valve 17, LPG cut valve 18, and control valve 23) to/from the battery, thereby actuating the valves to their open or closed positions to control liquid and gas fuel flow. *Id.*, ¶¶[0013]-[0014], Fig. 1; *see also* §XII.A.1.f, above. Because these valves are mechanical valves that are controlled by an electrical circuit powered by a battery to open and close the fuel paths, a POSA would have understood them to constitute an electro-mechanical valve system with an electrical switch.

277. Thus, Nakafushi in view of Jungmann and Parlatore disclose all elements of Claim 11 and render it obvious for the reasons described above.

2. Claim 12

278. Claim 12 depends from Claim 11, and further recites "wherein the electro-mechanical valve system is configured to switch operation of the generator from multiple fuel sources while the generator is running."

279. As explained for Claim 20, Nakafushi's valve system is configured to switch operation of the engine from multiple fuel sources while the engine is running. *See* XII.C.2, above. Those same arguments apply equally if not more so when Nakafushi's engine includes an alternator to function in a generator, per the teachings of Jungmann (§XII.D.1.a, above), since a POSA would find it advantageous to be able to maintain generator operation when switching fuel between sources. Nakafushi thus discloses this element.

280. Nakafushi with Jungmann and Parlatore thus disclose all elements of Claim 12 and render it obvious.

3. Claim 13

281. Claim 13 depends from Claim 11, and further requires "wherein the electro-mechanical valve system is configured to prevent simultaneous delivery of the liquid fuel and the gaseous fuel to the engine."

282. As explained for Claim 22, Nakafushi's valve system is configured to

prevent simultaneous delivery of gasoline and LPG to the engine. *See* §XII.C.4, above. This feature is desirable so that the air-fuel ratio does not become too rich, especially when switching between fuel sources while the engine is running. Nakafushi thus discloses this element.

283. Nakafushi with Jungmann and Parlatore thus disclose all elements of Claim 13 and render it obvious.

4. Claim 16

284. Claim 16 depends from Claim 11, and further requires "wherein the pressurized fuel source comprises a pressurized fuel container located off-board the generator having a regulator mounting device to secure at least the secondary pressure regulator thereto."

285. Parlatore discloses a regulator mounting device to secure the secondary pressure regulator to the LPG tank. The LPG tank is connected to the engine through hose 312.

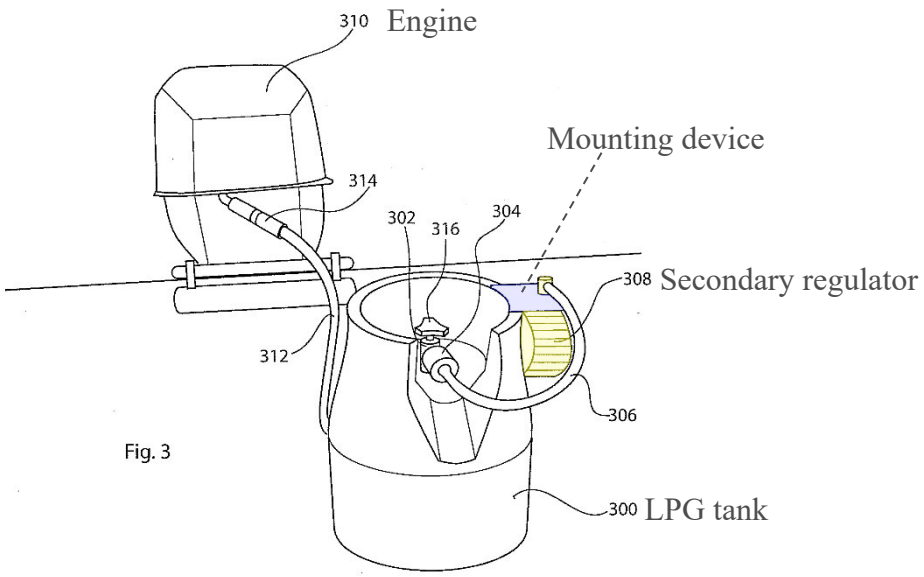

Ex. 1010, Fig. 3 (coloring and annotations added).

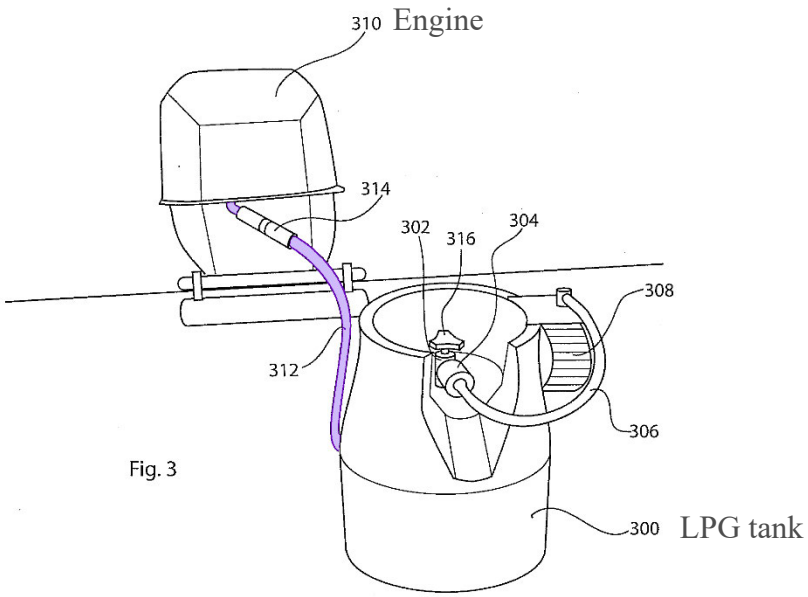

Id. (coloring and annotations added).

286. A POSA would have been motivated to use Parlatore's off-board pressurized fuel container and mounting device and had a reasonable expectation

of success. *See* § XII.H.2.1 below. For example, A POSA would appreciate that using a remote container with a mounting device would increase fuel capacity, portability, and safety. *Id.*

5. Claim 17

287. Claim 17 depends from Claim 11, and further requires "a dual stage pressure regulator comprises the primary pressure regulator and the secondary pressure regulator."

288. Parlatore discloses this element: "the regulator arrangement of the primary regulator 106 and the secondary regulator 110 may be such that they are combined as a single, two-stage, regulator 202." Ex. 1010, ¶¶[0018], [0022], Figs. 1-2.

E. Ground 5: Claims 14-15 and 24 are obvious over Nakafushi in view of Jungmann and Parlatore, with Olmr and/or Bernhardsson

289. Claims 14-15 and 24 of the '034 Patent are obvious for at least the reasons described below.

1. Claim 14

290. Claim 14 depends from Claim 11.

a) Element [14.1]

291. Element [14.1] requires "a carburetor cutoff solenoid coupled to a carburetor to control liquid fuel flow to the engine."

292. As discussed previously, Nakafushi alone, or in combination with

Olmr, discloses a carburetor cutoff solenoid coupled to the carburetor to control gasoline flow to the engine. *See* §§XII.A.1.d, above. Similarly, Bernhardsson discloses solenoid valve 19 for regulating fuel flow through pipe 18 to carburetor 9. *See* §XII.C.1, above.

293. To the extent not expressly disclosed by Nakafushi alone, a POSA would have found it obvious to use Olmr's or Bernhardsson's disclosed solenoid valve as Nakafushi's control valve 23 since Olmr's and Bernhardsson's solenoids are a specific example of the type of valve that can be used to allow or prevent gasoline flow through a passageway towards the engine, and which can be actuated via an electrical switch. A POSA would have been motivated to use Bernhardsson's solenoid valve in Nakafushi's engine for the same reasons and with the same expectation of success as described for the combination of Olmr with Nakafushi. *See* §§XII.A.1.d.(1)–(2), above.

b) Element [14.2]

294. Element [14.2] requires "a gaseous fuel cutoff solenoid coupled to the gaseous fuel line to control flow of the gaseous fuel to the engine."

295. As discussed previously, Nakafushi in combination with Bernhardsson discloses a gaseous fuel cutoff solenoid to control flow of LPG to the engine. *See* §§XII.A.1.e, XII.A.2.b and XII.C.1, above.

296. Thus, Nakafushi in view of Jungmann and Parlatore, and with Olmr

and/or Bernhardsson, disclose all elements of Claim 14, and render it obvious.

2. Claim 15

297. Claim 15 depends from Claim 14, and further requires "a liquid fuel cutoff solenoid coupled to the liquid fuel line to control flow of the liquid fuel to the carburetor."

298. As discussed previously, Nakafushi discloses a liquid fuel cutoff (gasoline cut valve 17), which is coupled to the gasoline line to control flow of gasoline to the carburetor. See §XII.A.8, above. For the same reasons it would have been obvious to use a solenoid for Nakafushi's LPG cut valve 18, it would have been obvious to use a solenoid for Nakafushi's gasoline cut valve 18. See §XII.C.1, above. Bernhardsson discloses using a solenoid valve (i.e. valve 19) for cutting off the flow of gasoline from container 16 to carburetor 9. Ex. 1008, 2:13-18 & Fig. 1.

3. Claim 24

299. Claim 24 depends from Claim 18, and requires the additional elements set forth below.

a) Element [24.1]

300. Element [24.1] recites "an alternator driven by the engine to form a generator."

301. As explained previously, it would have been obvious to a POSA to combine Nakafushi and Jungmann, which collectively disclose this Element. See

§§XII.D.1.c, above.

b) Element [24.2]

302. Element [24.2] recites "a fuel regulator system located off-board the generator."

303. As explained previously, it would have been obvious to a POSA to combine Parlatore with Nakafushi and Jungmann, which disclose this Element. *See* §XII.d.4, above. Parlatore discloses a fuel-regulator system in the form of primary and secondary regulators 304 and 308 feeding fuel to the engine from tank 300 and located "off-board" the engine. Ex. 1010, Fig. 3. That is, since Parlatore's primary and secondary regulators 304 and 308 are located attached to and adjacent the propane tank 300. It would have been obvious to a POSA to use the same configuration for a generator, especially because Parlatore suggests using its fuel regulator system with a generator. *Id*., Figs. 1, 3, ¶¶[0018]-[0019].

c) Element [24.3]

304. Element [24.3] recites "a primary pressure regulator coupled to a service valve of the pressurized fuel source to regulate the fuel supplied from the pressurized fuel source to a reduced pressure."

305. As explained previously, Parlatore discloses this element. *See* §XII.D.1.e., above.

d) Element [24.4]

306. Element [24.4] recites "a secondary pressure regulator coupled to the

primary pressure regulator to regulate the gaseous fuel supplied from the primary pressure regulator to a desired pressure for delivery through the gaseous fuel line to operate the engine."

307. As explained previously, Parlatore discloses this element. *See* §XII.D.1.f, above.

F. Ground 6: Claims 1-3, 5-9, 11-14, 17-20, and 22-23 are anticipated by the Kubota DF972 Workshop Manual

308. In my opinion, the Kubota DF972 Workshop Manual (the "Workshop Manual") discloses each limitation of claims 1-3, 5-9, 11-14, 17-20, and 22-23 of the '034 Patent, as arranged in the claims.

1. Claim 1

a) Element [1.0]: A multi-fuel engine comprising:

309. The Workshop Manual discloses a "multi-fuel engine." Specifically, the Workshop Manual discloses an engine having the model number DF972-E2, which is a dual-fuel "GASOLINE, LPG, NATURAL GAS ENGINE." Ex. 1012 at 1, 53–81 (describing the DF972 and its operation on gasoline, LPG, and/or natural gas.

b) Element [1.1]: an engine

310. Element [1.1] calls for "an engine operable on a liquid fuel and a gaseous fuel." The Workshop Manual shows that the DF972 engine uses both "[g]asoline fuel" (a liquid fuel) and "LPG fuel" (a gaseous fuel). *Id.*, 65. The figure

below shows the DF972 fuel system for supplying either gasoline or LPG to the carburetor (and thereafter the engine):

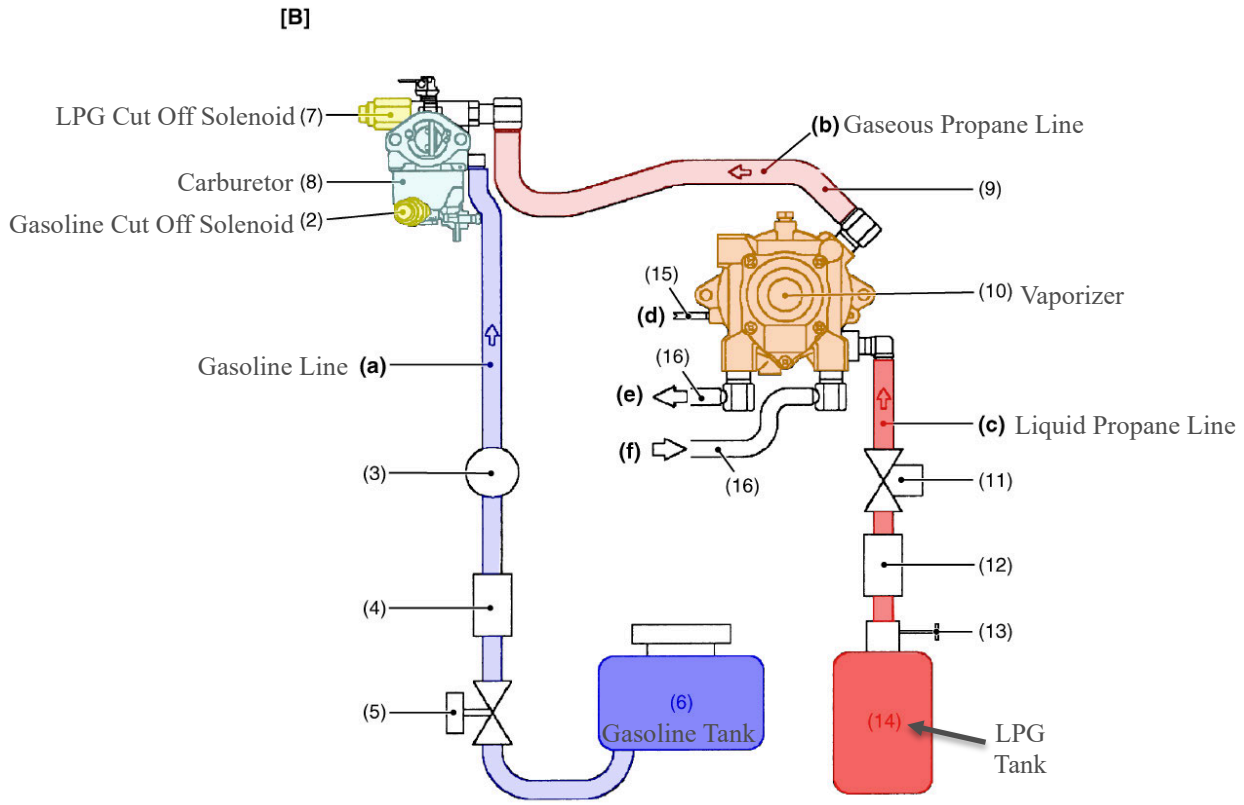

Id., 65 (coloring and annotations added).

311. The Workshop Manual shows engine operation on LPG/"LP Gas." *Id*., 1, 8, 10, 26, 30, 64, 68–69, 84. While tank (14) contains LPG in both liquid and vapor form, the Workshop Manual explains that "[t]he liquid fuel is evaporated in vaporizer and is sent to the DF [dual fuel] carburetor (8) as a gaseous fuel." *Id*., 65 (also denoting "Gaseous Propane Line" (b)), 69 (describing the vaporizer operation).

c) Element [1.2]: a carburetor

312. Element [1.2] calls for "a carburetor attached to an intake of the engine to mix air and fuel and connect a liquid fuel source to the intake, the carburetor comprising a float bowl."

313. The Workshop Manual discloses a carburetor that mixes air and fuel, explaining that:

> The mixer meters both fuel and air, and procedures [sic: produces] an air/fuel mixture that has the proper ratio as required by the engine. When the engine starts, the LPG furl [sic: fuel] flows out from main jet (4) to venture [sic: the venturi at] a constant amount and is mixed with air quantity corresponding to the opening of the throttle valve (1) and is supplied to the cylinder.

Id., 68. Figures in the Workshop Manual illustrate the carburetor operation:

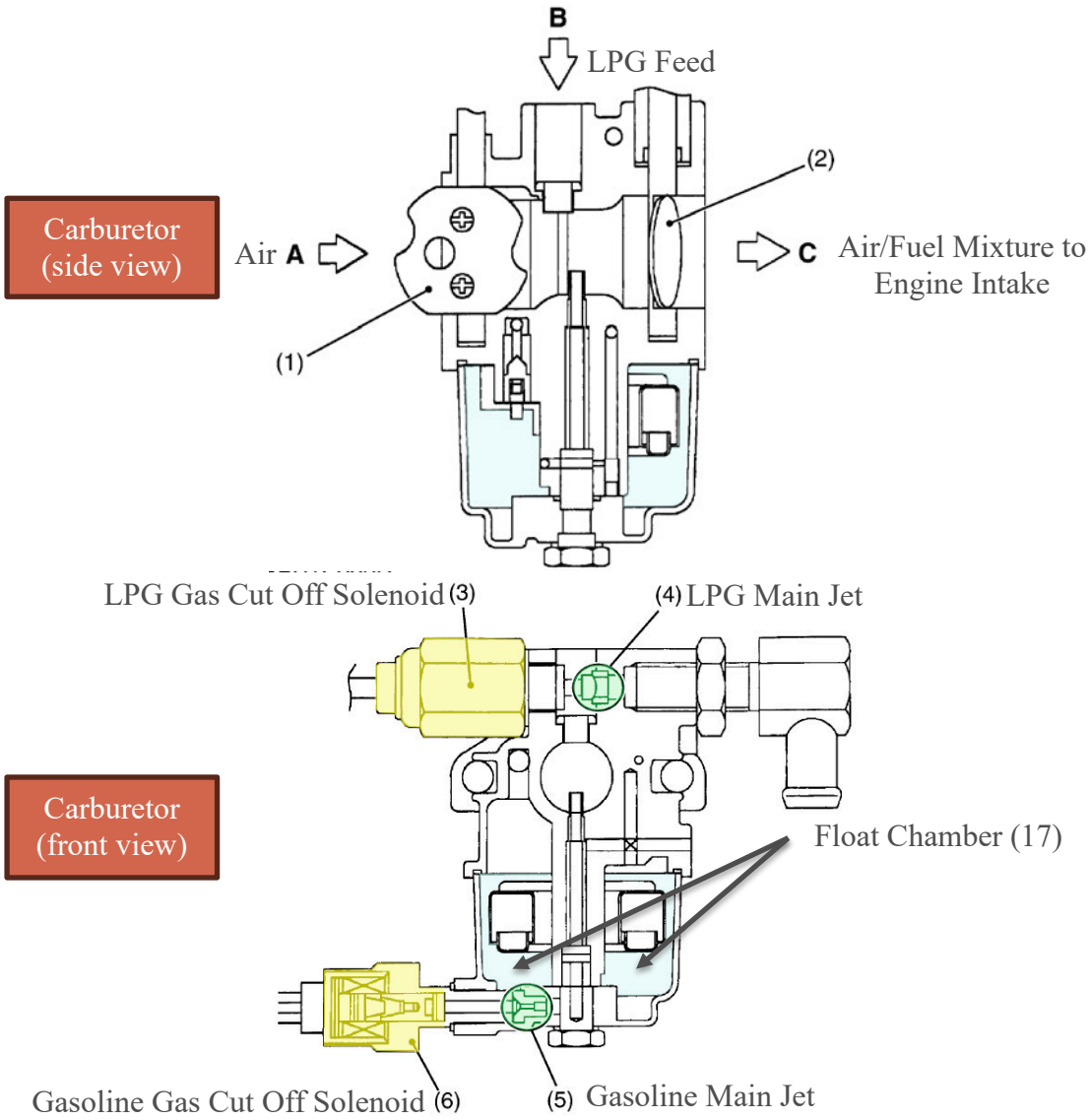

Id. (coloring and annotations added).

314. As annotated above, the carburetor for the DF972 engine comprises a float bowl, labeled "float chamber (17)" in the Workshop Manual figure for the WG-972 figures (*id*., 67). The Workshop Manual confirms that the DF carburetor operates the same as the gasoline-only carburetor when operating on gasoline. *Id.*, 68.

315. The Workshop Manual shows that the carburetor is attached to the engine intake:

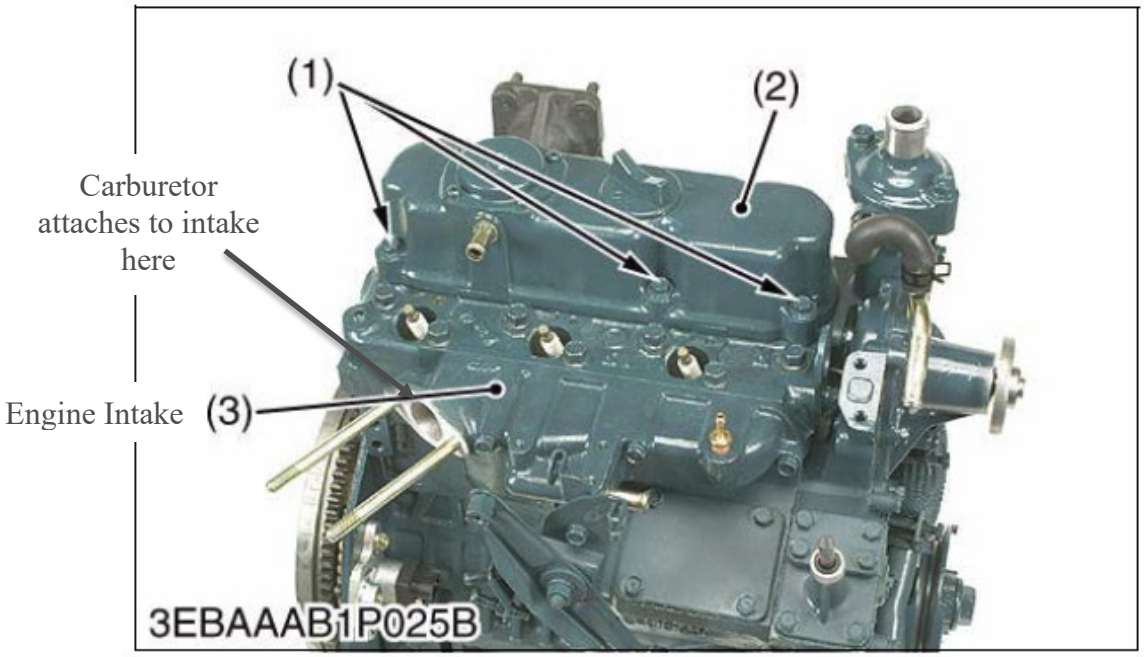

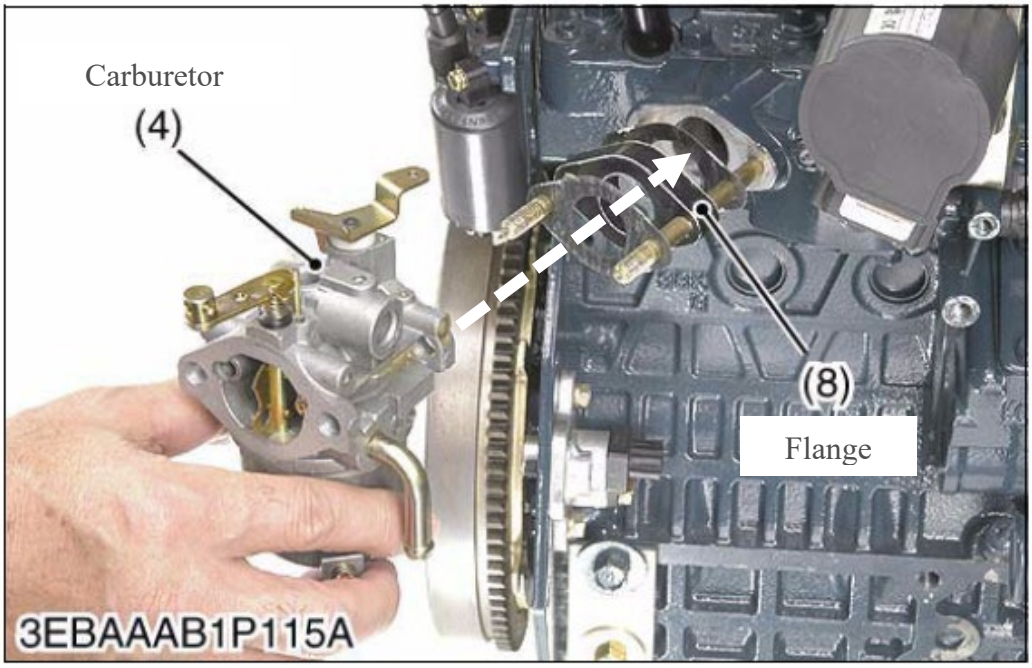

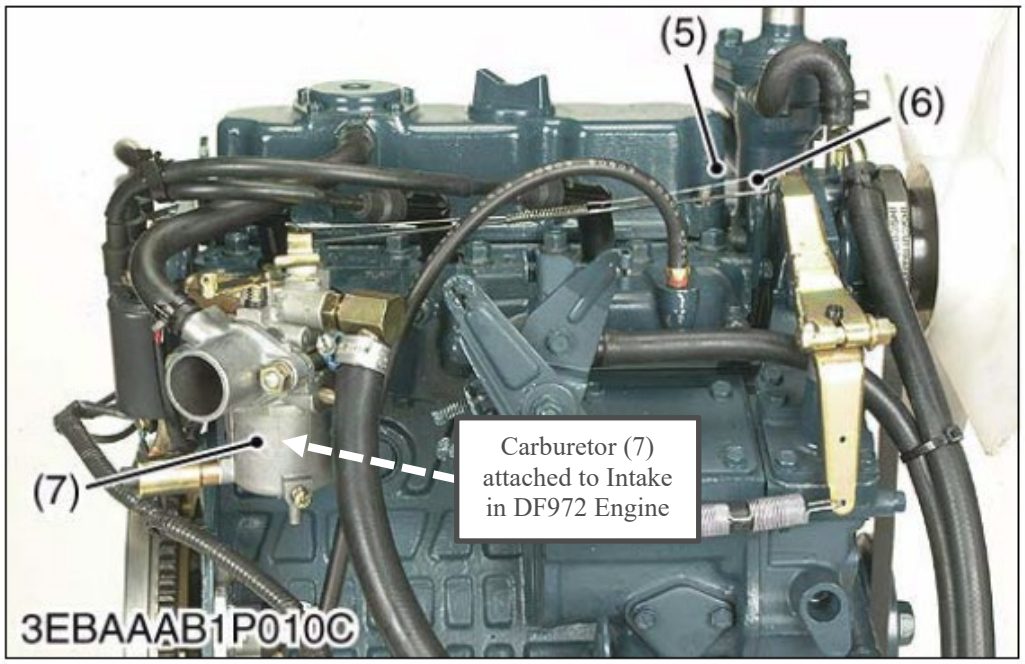

Ex. 1012, 115, 119 (annotations added).

316. The Workshop Manual also discloses that the carburetor connects a liquid fuel source (gasoline) to the engine intake, to which gasoline flows from the float bowl:

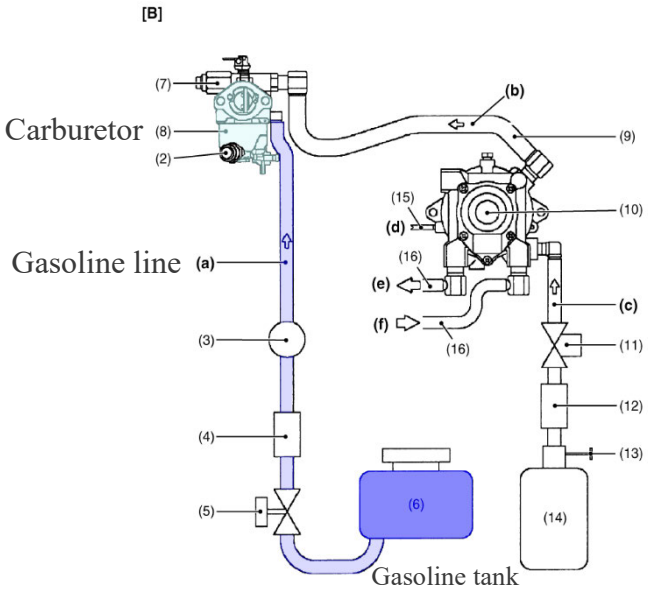

Id., 65 (coloring and annotations added).

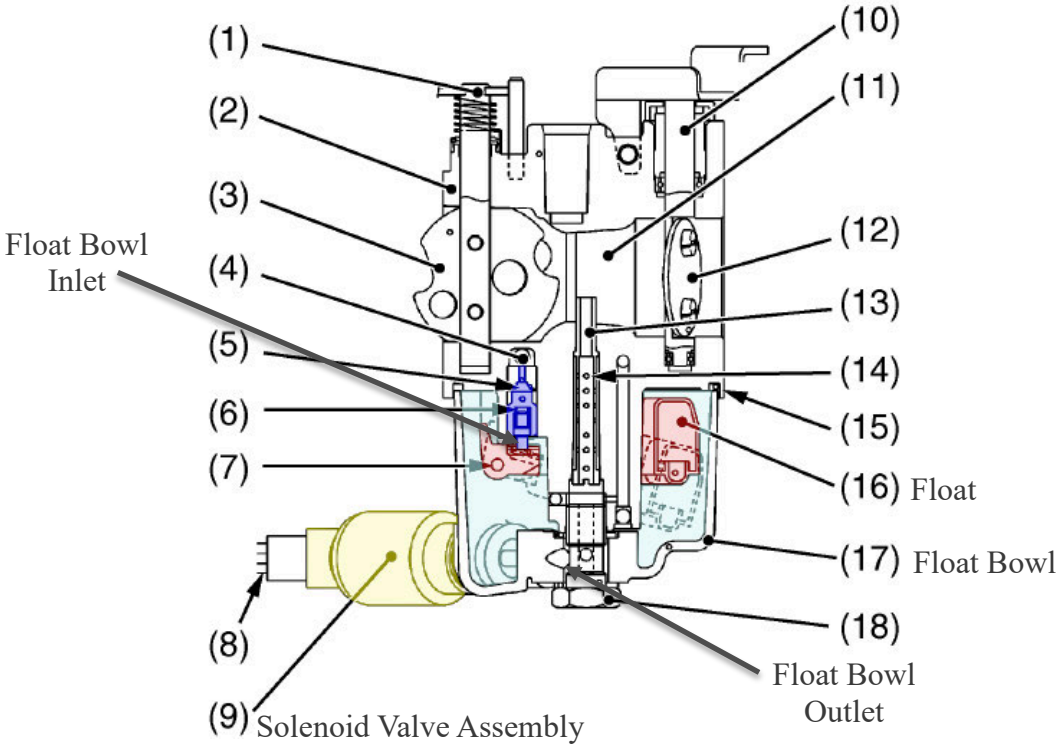

Id., 67 (coloring and annotations added).[6]

[6] In the Workshop Manual, the figure corresponds to the WG972-E2 Carburetor. However, the Workshop Manual confirms that the "DF Carburetor operates the same as a gasoline carburetor in gasoline fuel." Ex. 1012, 68.

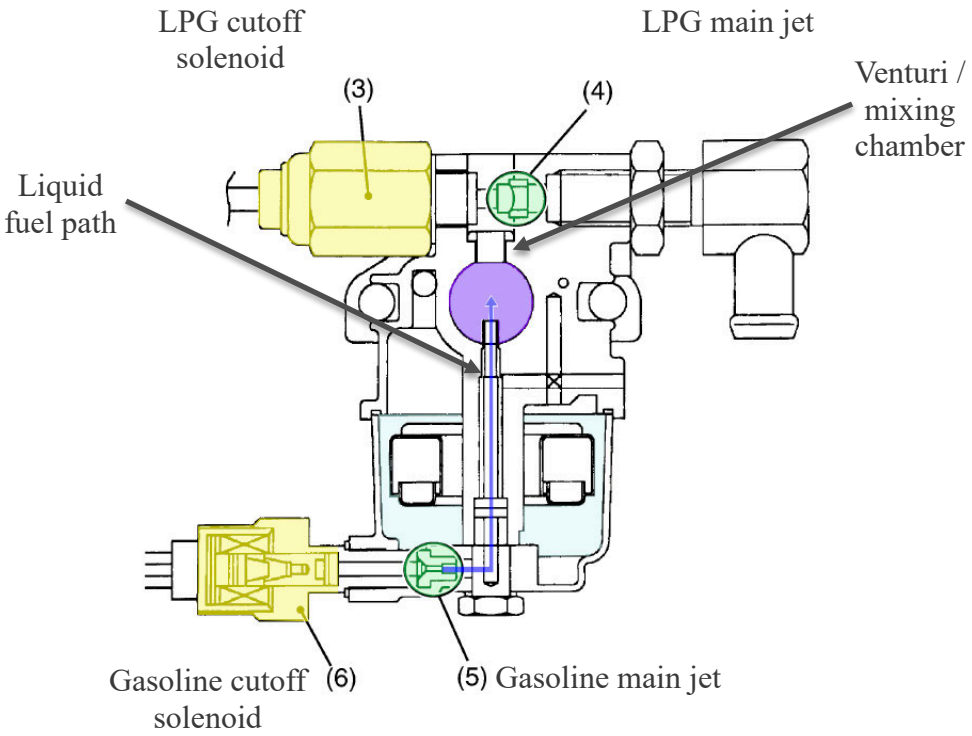

Ex. 1012, 68 (coloring and annotations added).

d) Element [1.3]: a liquid cutoff solenoid

317. Element [1.3] calls for "a liquid cutoff solenoid coupled to the carburetor to open and close a liquid fuel path to the engine downstream from the float bowl."

318. The Workshop Manual discloses a liquid cutoff solenoid (i.e. a "Gasoline Cut Off Solenoid") that is coupled to the carburetor and opens and closes a liquid fuel path downstream from the float bowl (i.e. "float chamber"). Ex. 1012, 65, 68 ("When the fuel select switch (8) in the "GASOLINE" position "D" and the main switch in the "ON" position, the battery current flows to the gasoline cut off solenoid (6). ***Therefore gasoline fuel in the float chamber flows to the mixing***

chamber." (emphasis added)).

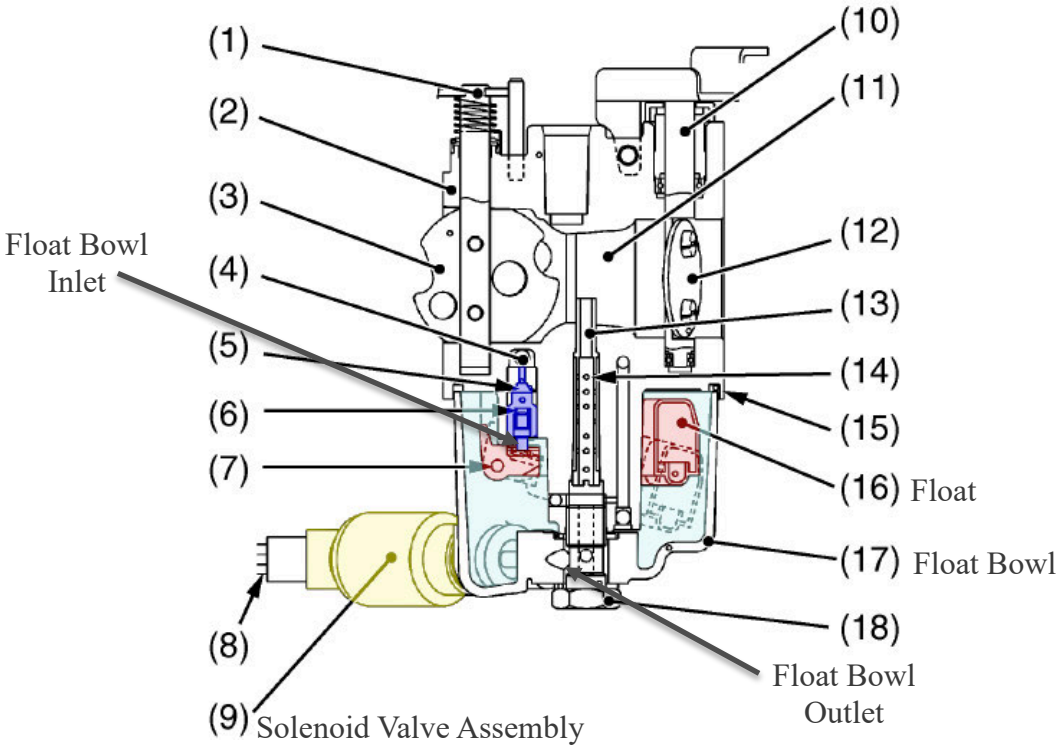

Id., 67 (coloring and annotations added).[7]

[7] In the Workshop Manual, the figure corresponds to the WG972-E2 Carburetor. However, the Workshop Manual confirms that the "DF Carburetor operates the same as a gasoline carburetor in gasoline fuel." Ex. 1012, 68.

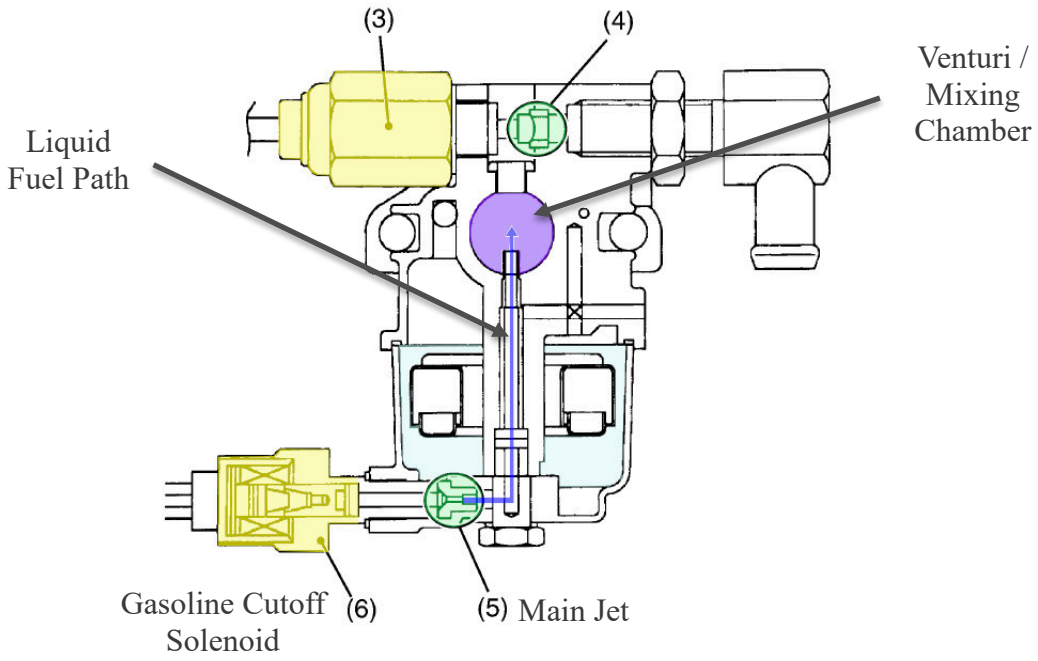

Ex. 1012, 68 (coloring and annotations added).

e) Element [1.4]: a gaseous cutoff

319. Element [1.4] calls for "a gaseous cutoff coupled to open and close a gaseous fuel source to the engine."

320. The Workshop Manual discloses a gaseous cutoff (i.e. a "LPG Cut Off Solenoid") that opens and closes a gaseous fuel source (i.e. the "LPG Tank (14)") to the engine. Ex. 1012, 65, 68 ("When the fuel select switch (8) is turned to the "LPG" position "E," the battery current stops to the gasoline cut off solenoid (6) and flows to the LPG cut off solenoid (3) and LPG shut off solenoid valve (9). Then, the gasoline fuel flow is shut and LPG fuel flows to the mixing chamber.")

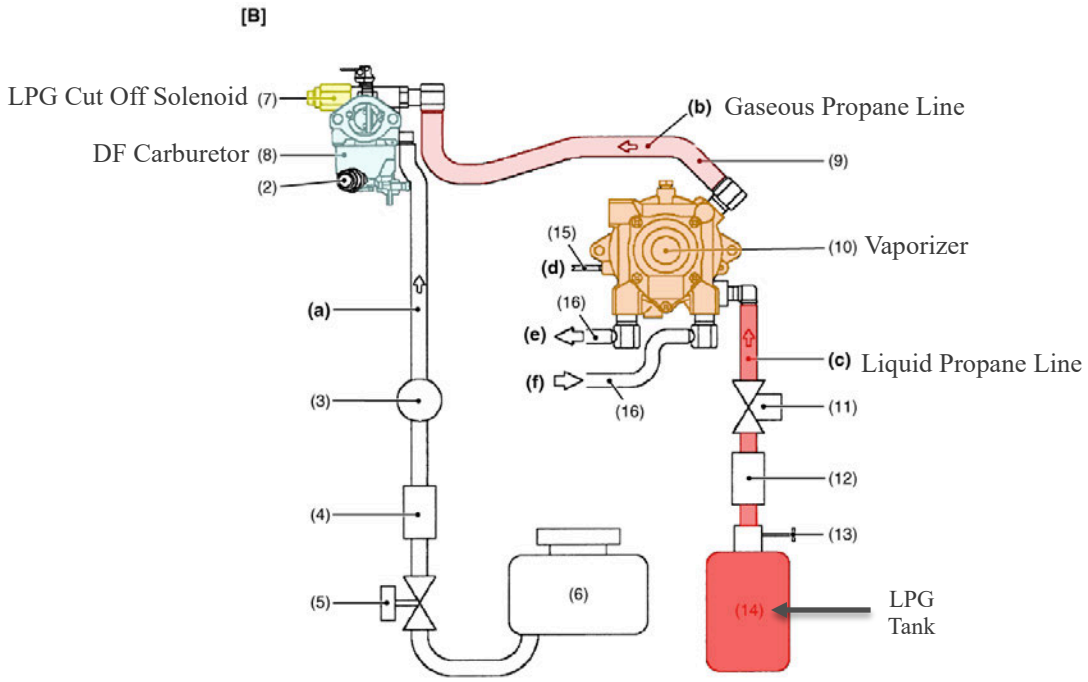

Ex. 1012, 65 (coloring and annotations added).

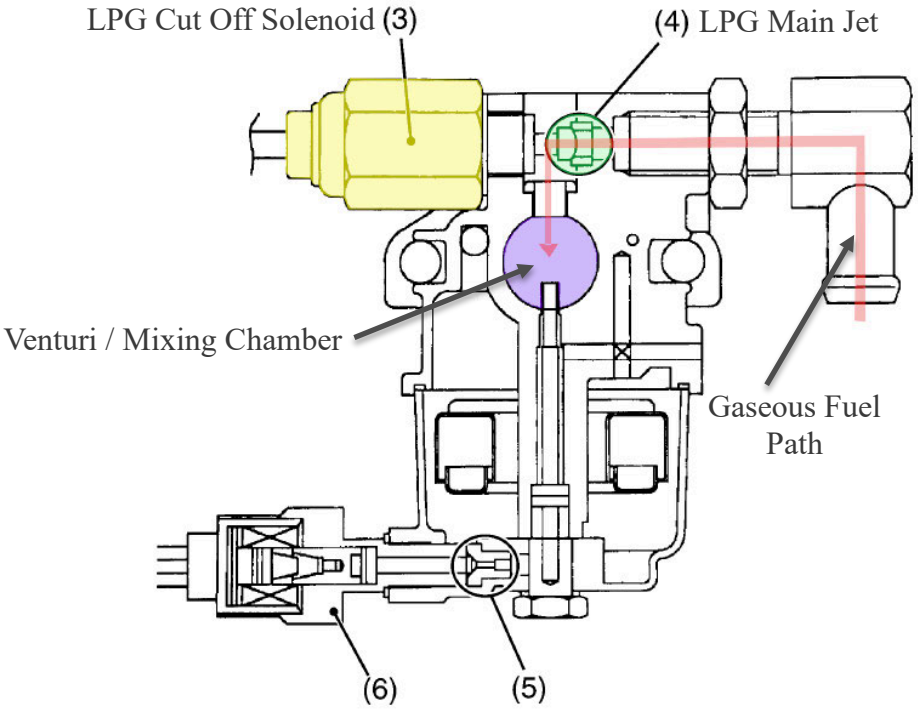

Ex. 1012, 68 (coloring and annotations added).

f) Element [1.5]: a switch

321. Element [1.5] calls for "a switch selectively coupling a power source to the liquid cutoff solenoid to open and close the liquid fuel path."

322. The Workshop Manual discloses a switch (i.e. a "Fuel Select Switch") that selectively couples a power source (i.e. the source of the "battery current") to the liquid cutoff solenoid (i.e. the "Gasoline Cut Off Solenoid") to open and close the liquid fuel path:

> With the fuel select switch (8) in the "GASOLINE" position "D" and the main switch in the "ON" position, the battery current flows to the gasoline cut off solenoid (6). Therefore gasoline fuel in the float chamber flows to the mixing chamber. When the fuel select switch (8) is turned to the "LPG" position "E," the battery current stops to the gasoline cut off solenoid… [t]hen, the gasoline fuel flow is shut.

Ex. 1012, 68 .

323. This switch is also shown in the Workshop Manual figures:

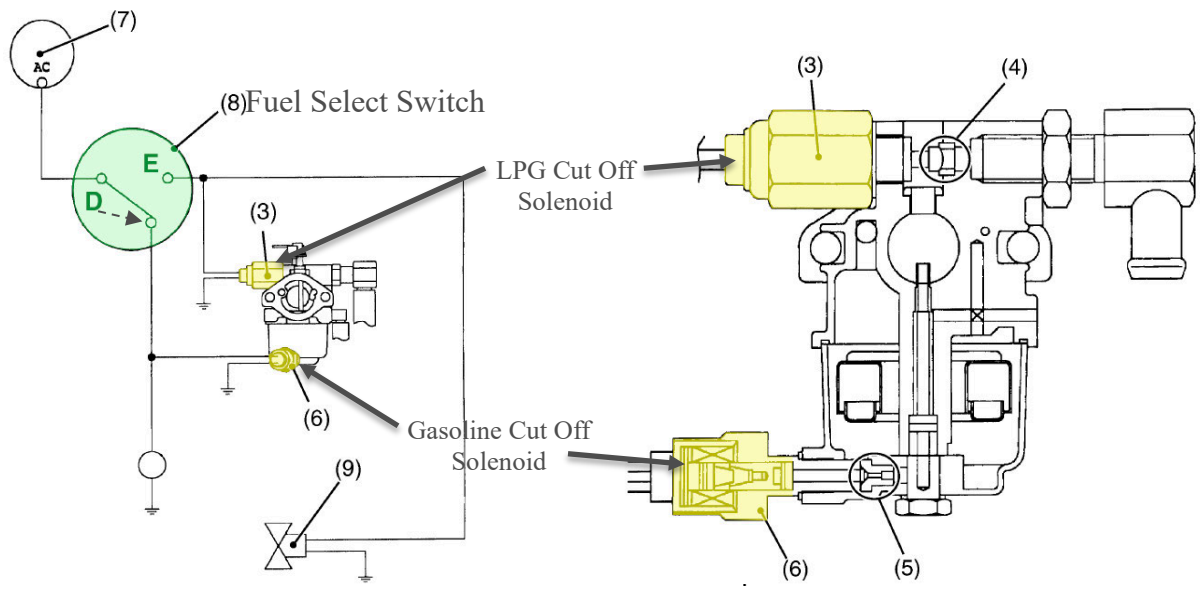

Id. (coloring and annotations added).[8]

324. As shown above, the Workshop Manual discloses the switch schematically. In practice, a POSA would be able to choose a switching mechanism based on the schematic shown for connecting the power source (e.g., a battery) to the solenoids. A POSA, for example, would understand that the switch would include at least two conductive parts (i.e. contacts) that correspond to the Gasoline and LPG cut off solenoids, respectively, which sends power to each respective solenoid when it is selected via the switch. The switch can be located in a convenient location on the engine, such as on the engine's control panel. *See, e.g.*,

[8] The location of GASOLINE position "D" is slightly misleading, as it is shown next to the lead proximate to Main Switch (7) instead of the lead next to Gasoline Cut Off Solenoid (6). A POSA would understand that the Fuel Select Switch (8) toggles between position "E" and the lead proximate the Gasoline Cut Off Solenoid (6), and thus that position "D" should correspond to the lead proximate the Gasoline Cut Off Solenoid (6).

Ex. 1009, Fig. 1 (showing fuel selector switch on control panel 48). Such switches were well known in the art, and a POSA would have known how to select and implement a switch for achieving this operation depicted in the Workshop Manual.

325. Thus, the Workshop Manual anticipates Claim 1.

2. Claim 2

326. Claim 2 depends from Claim 1, with two additional elements.

a) Element [2.1]: the liquid cutoff solenoid is positioned on the liquid fuel path

327. Element 2.1 requires "wherein the liquid cutoff solenoid is positioned on the liquid fuel path, which extends from the float bowl to a throat of the carburetor, to open and close the liquid fuel path."

328. The Workshop Manual's Gasoline Cut Off Solenoid (*see* §XII.F.1.e, above) is positioned on a liquid fuel path between the float bowl and the carburetor mixer, which a POSA would understand to be the throat of the carburetor.

329. As shown below, the liquid gasoline in the float bowl exits the float bowl to the Solenoid Valve Assembly:

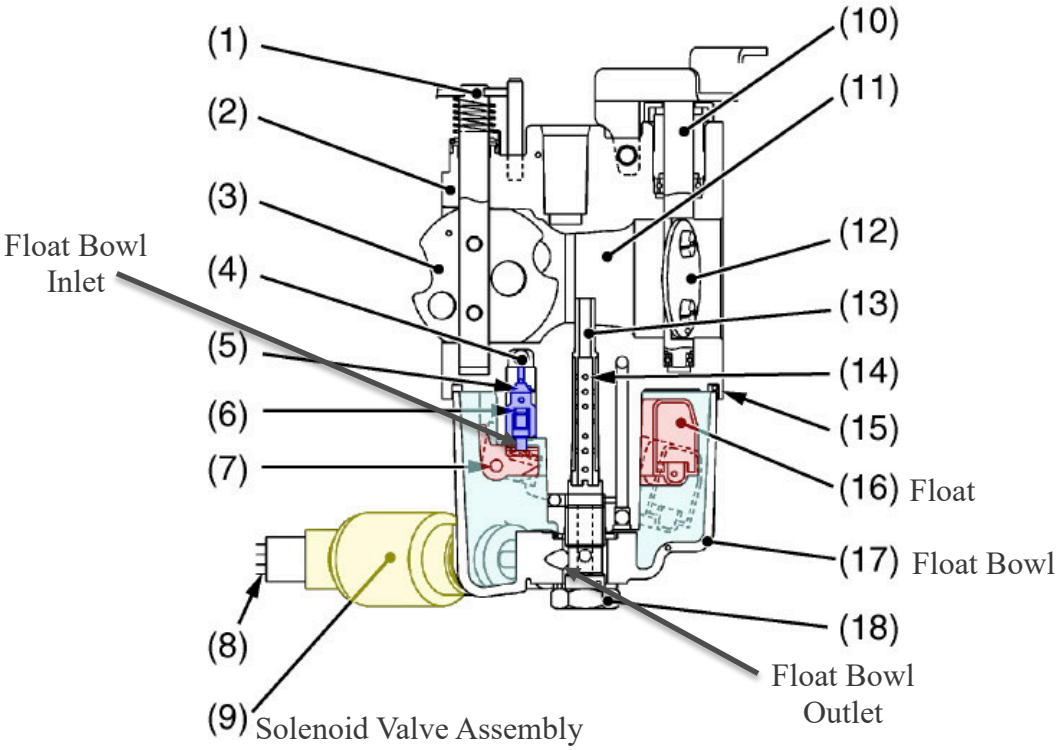

Id., 67 (coloring and annotations added).[9]

330. The solenoid valve assembly includes a gasoline cutoff solenoid, which, when open, allows the liquid gasoline to pass through to the main jet and on to the venturi/mixing chamber (i.e. the "throat" of the carburetor):

[9] In the Workshop Manual, the figure corresponds to the WG972-E2 Carburetor. However, the Workshop Manual confirms that the "DF Carburetor operates the same as a gasoline carburetor in gasoline fuel." Ex. 1012, 68.

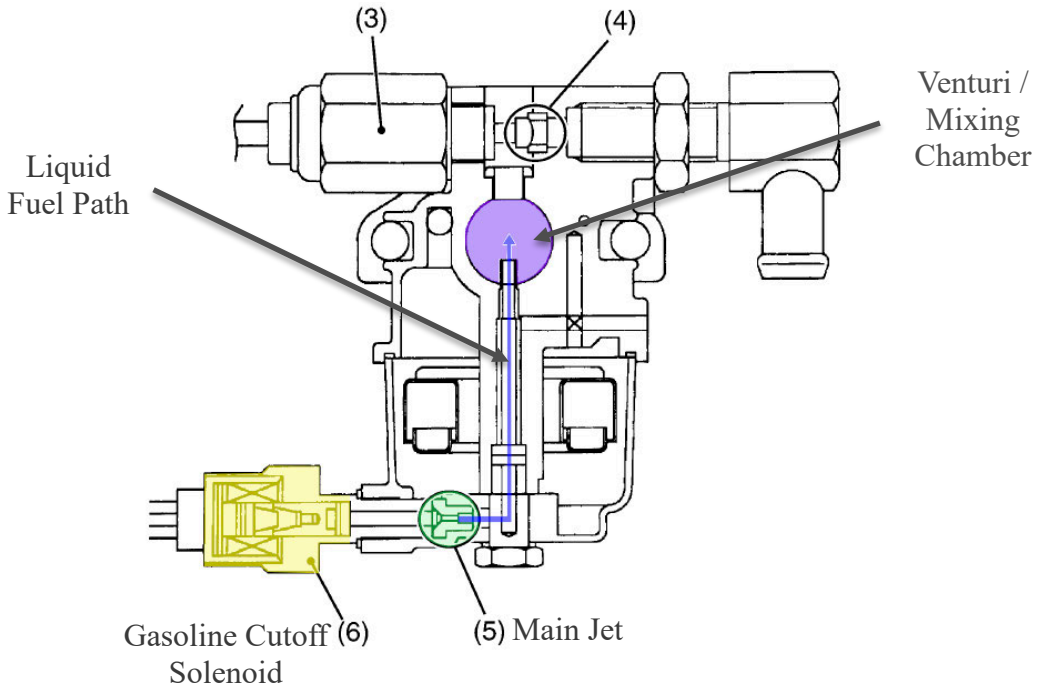

Id., 68 (coloring and annotations added).

331. Tsuda (Exhibit 1018) further confirms that the gasoline cutoff solenoid is positioned on the liquid fuel path between the float bowl and throat of the carburetor. Tsuda, a patent assigned to Kubota, shows a carburetor that appears nearly identical to the carburetor shown in the Workshop Manual. For example, the carburetors from the Workshop Manual and Tsuda are shown below:

Workshop Manual

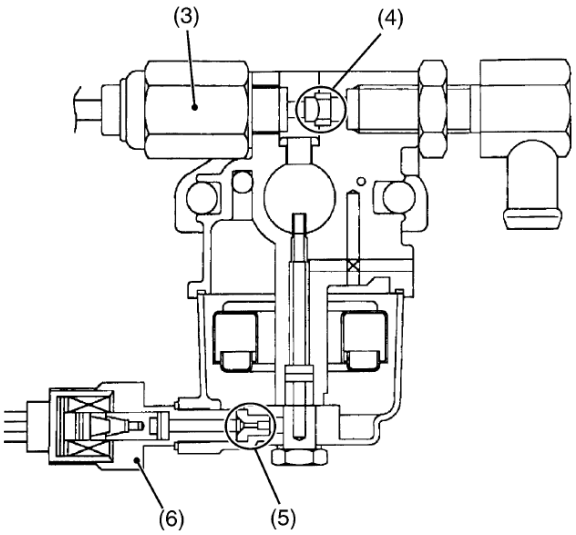

Tsuda, Fig 1

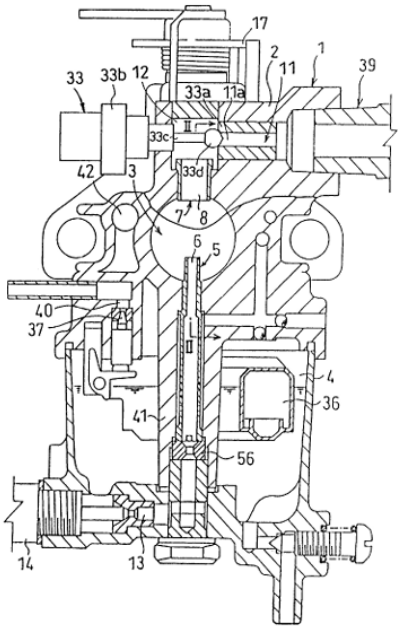

FIG. 1

332. Given that Tsuda was assigned to Kubota, a POSA would understand that the carburetor in Tsuda and the carburetor in the Workshop Manual share a substantially similar design. And while various components are given different names in Tsuda than they have in the Workshop Manual, a POSA would understand that these components are essentially the same.

333. Relevant here, Tsuda explains that a liquid fuel inlet 13 is located at the bottom of the float chamber through which the float chamber 4 communicates with the liquid fuel nozzle 5 projecting into the venturi passage 3 (i.e., throat) of the carburetor. Ex. 1018, 2:53–60, Figs. 1, 6. Tsuda further explains that liquid fuel valve 14 opens and closes the inlet. *Id.*, 2:61–62. These components are labeled in Tsuda's Figure 1 below:

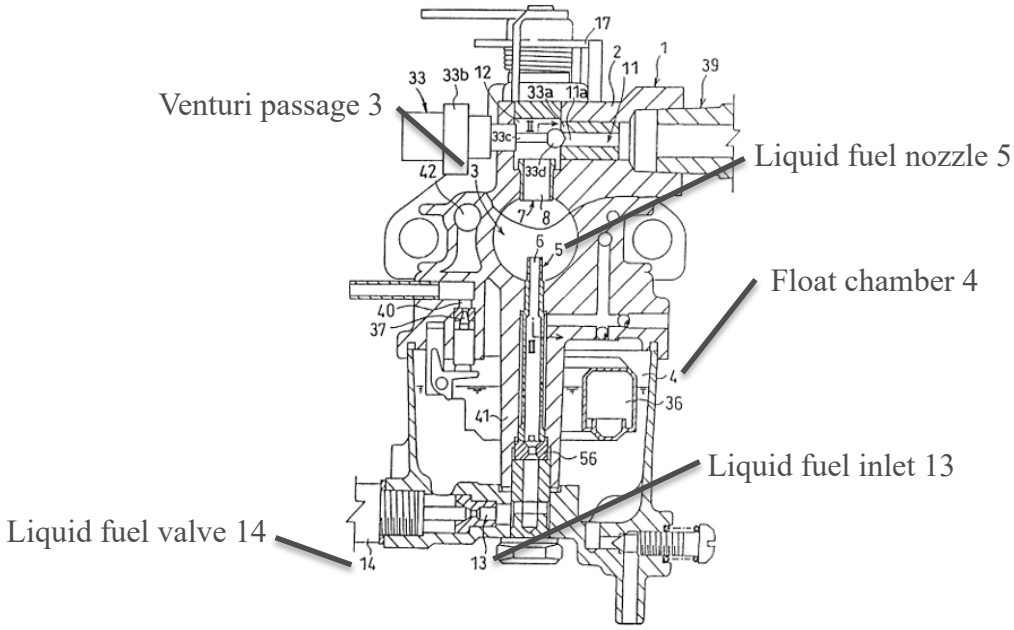

FIG. 1

334. These components from Tsuda correspond to substantially similar components in the Workshop Manual:

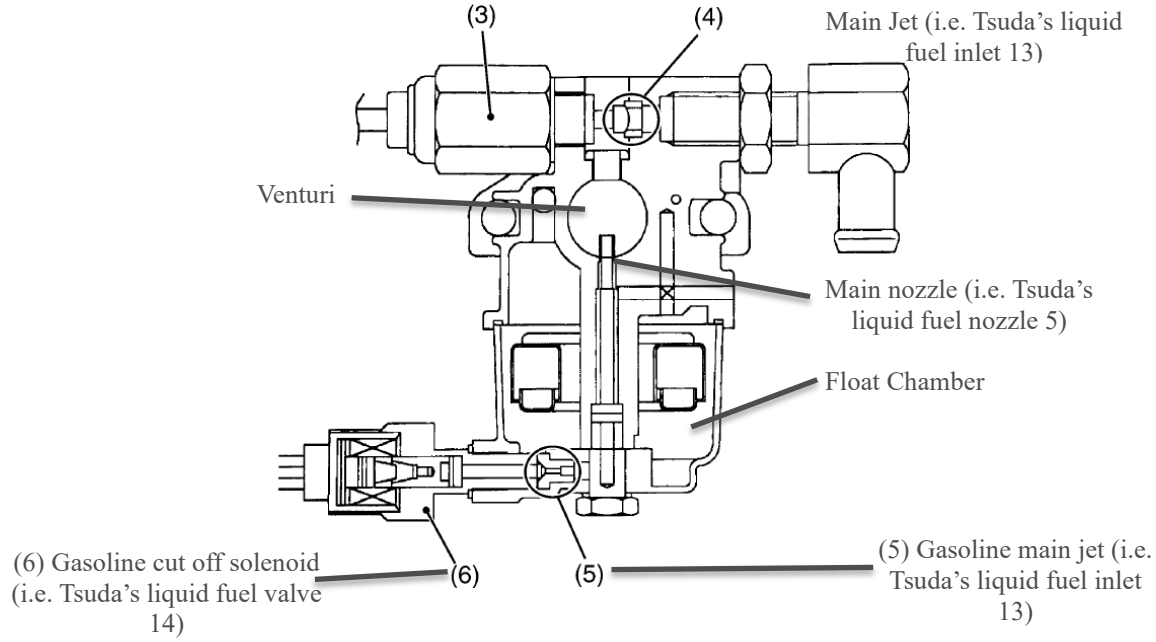

Ex. 1012, 67–68.

335. Accordingly, Tsuda confirms that the Workshop Manual's liquid

cutoff solenoid 6 is positioned on the liquid fuel path between the float bowl and the carburetor.

b) Element [2.2]: the gaseous cutoff controls flow of the gaseous fuel

336. Element [2.2] further calls for "wherein the gaseous cutoff couples the gaseous fuel source to the intake to control flow of the gaseous fuel to the engine."

337. As previously discussed (§XII.F.1.e, above), the Workshop Manual discloses a gaseous cutoff (i.e. an "LPG Cut Off Solenoid") that controls the flow of gaseous fuel to the engine, as seen below:

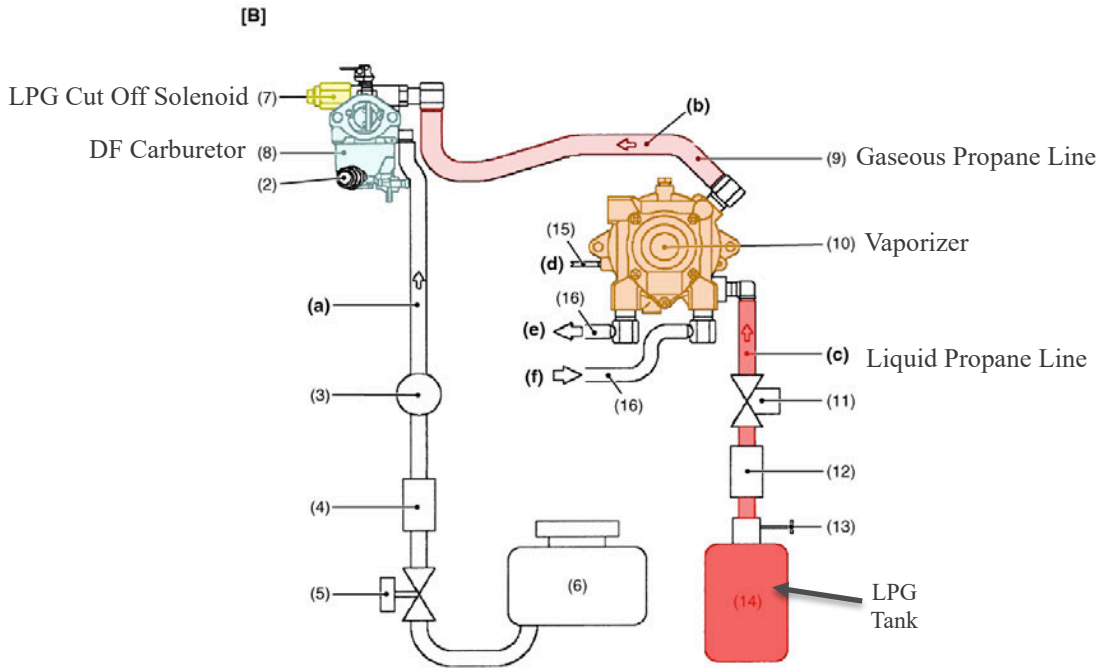

Ex. 1012, 65 (coloring and annotations added).

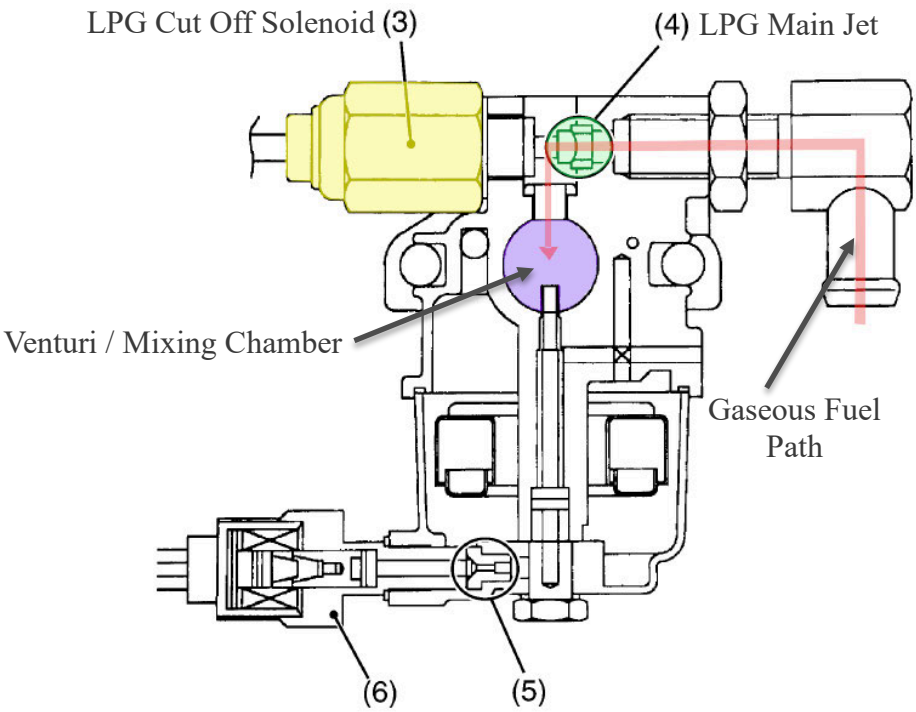

Ex. 1012, 68 (coloring and annotations added). Thus, the Workshop Manual discloses the added limitations of Claim 2, and therefore anticipates Claim 2.

3. Claim 3

338. Claim 3 depends from Claim 1, and further requires "wherein the switch actuates the iquid cutoff solenoid to enable changing engine operation between the liquid fuel and the gaseous fuel, so as to prevent fuel flow from the liquid fuel source and the gaseous fuel source simultaneously and allow switching between fuel sources on-the-fly during engine operation."

339. As discussed previously (§XII.F.1.f, above), the Workshop Manual describes the operation of the DF-972 engine's Fuel Select Switch as follows:

> With the fuel select switch (8) in the 'GASOLINE' position 'D' and the main switch in the 'ON' position, the battery current flows to the gasoline cut off solenoid (6). Therefore gasoline fuel in the float chamber flows to the mixing chamber. When the fuel select switch (8) is turned to the 'LPG' position 'E', the battery current stops to the gasoline cut off solenoid (6) and flows to the LPG cut off solenoid (3) and LPG shut off solenoid valve (9). Then, the gasoline fuel flow is shut and LPG fuel flows to the mixing chamber.

Ex. 1012, 68.

340. Simply put, when one fuel source is opened, the other is simultaneously closed, and vice versa. These switching capabilities are illustrated below, where switching between gasoline and LPG fuels involves closing the switch at position D or E, respectively:

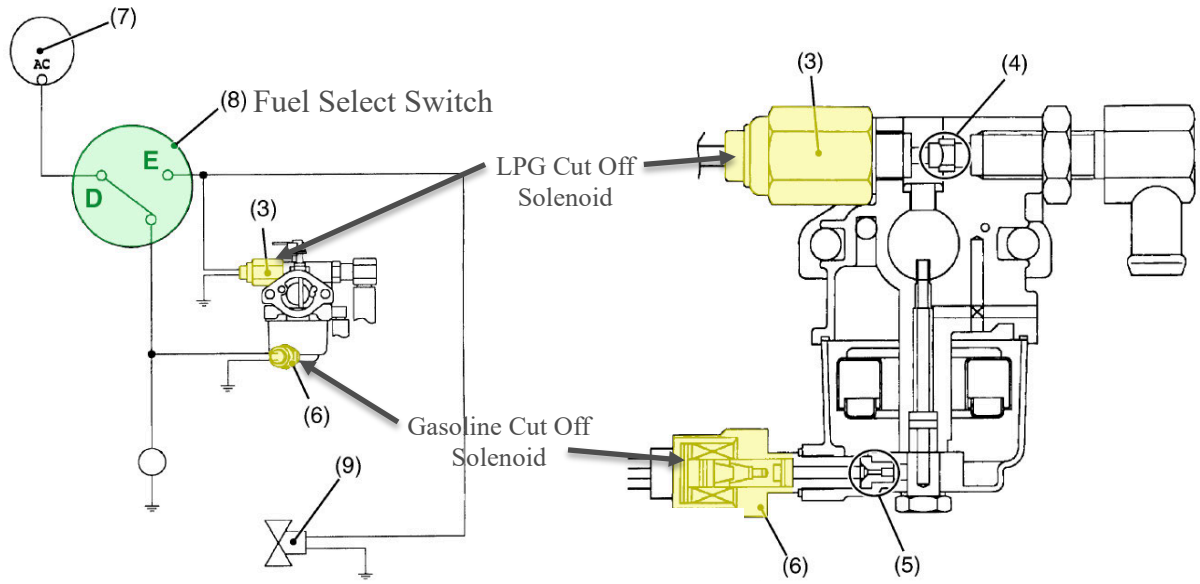

Id. (coloring and annotations added).

341. Since the diagram above shows that the fuel select switch cannot connect electrical power to both the LPG cut off solenoid and the gasoline solenoid and thus cannot keep the LPG cut off solenoid and the gasoline cut off solenoid open at the same time, a POSA would understand that liquid and gaseous fuel cannot and does not flow through the carburetor at the same time.

342. The Fuel Select Switch also allows switching between fuel sources "on-the-fly," i.e., while the engine is running (Ex. 1001, 7:24-27). A POSA would understand that the user can toggle between positions "D" (Gasoline Position) and "E" (LPG Cut Off Solenoid) while the engine is running to switch between fuel sources on-the-fly. This is clear both from the design of the switch and the design of the carburetor as shown in the manual figures.

343. Confirming how a POSA would interpret the switching capabilities of the DF-972 engine disclosed in the Workshop Manual, the Operator's Manual for the DF-972 engine expressly notes that users can switch the fuel from gasoline to LPG and vice versa while operating the engine:

> In case of converting the fuel (gasoline ↔ LPG) ***while running the engine***, the engine should be operated with the engine speed high and no-loaded.

Ex. 1013, 7 (emphasis added).

344. Even if the Workshop Manual does not sufficiently disclose allowing

for switching between fuel sources "on-the-fly," it would have been obvious to a POSA to combine the teachings of the Operator's Manual and Workshop Manual, both for the DF-972 engine, to satisfy this limitation. A POSA would have been motivated to combine the teachings from the manuals and would have had a reasonable expectation of success in their combination since they both disclose and discuss the configuration and operation of the DF-972 engine sold by Kubota. Thus, to the extent not already apparent from the Workshop Manual itself, a POSA would have confirmed from the Operator's Manual that the DF-972 engine described in the Workshop Manual was configured to allow for on-the-fly switching between fuels, as claimed. *Id*.

345. The Workshop Manual, either alone or as informed by or combined with the Operator's Manual, thus discloses the added limitations of Claim 3.

4. Claim 5

346. Claim 5 depends from Claim 1 and further requires "wherein the engine is a dual fuel engine that operates on gasoline from the liquid fuel source and LPG from the gaseous fuel source."

347. The Workshop Manual discloses a dual fuel engine that operates on gasoline from the liquid fuel source (i.e. "Gasoline Tank (6)") and LPG from the gaseous fuel source (i.e. "LPG Tank (14)"):

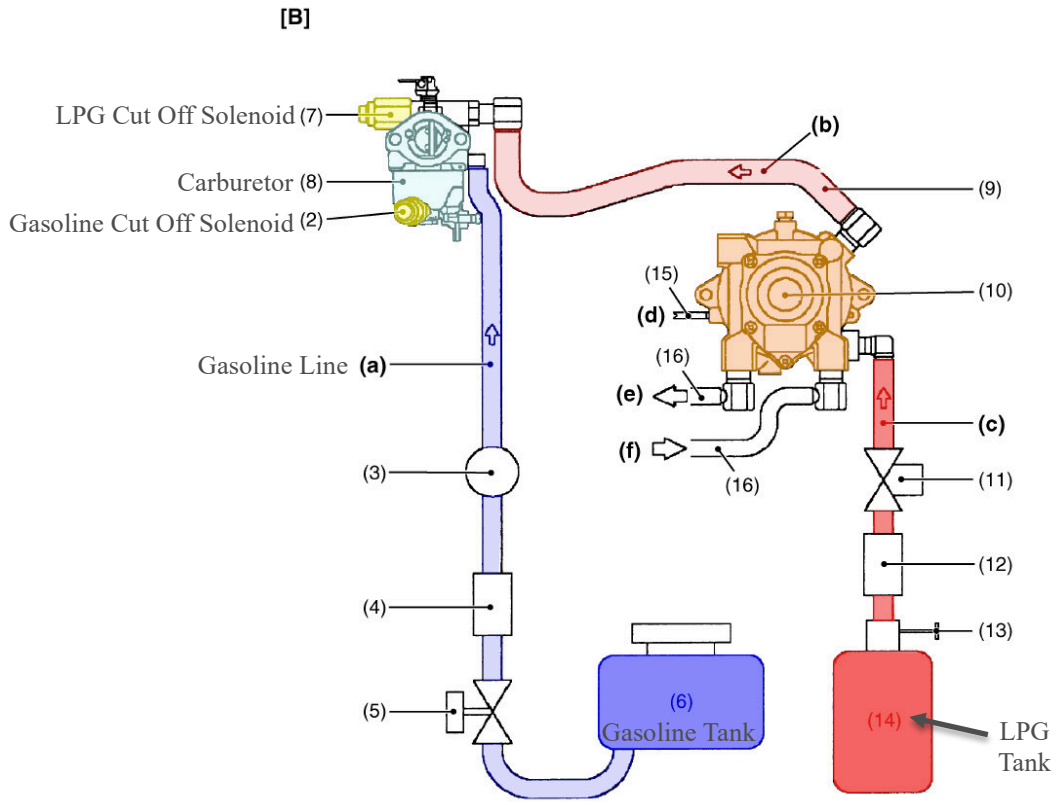

Ex. 1012, 65 (coloring and annotations added) ("This fuel system has 2 ways. Gasoline fuel is the same as WG972-E2. For LPG fuel, the liquid fuel stored in the LPG tank (14) is sent to vaporizer (10) by pressure in the gaseous phase in the tank through the LPG filter (12) and LPG shut off solenoid valve (11)."); *see also* §XII.F.1.a, above.

348. Thus, the Workshop Manual discloses the added limitations of Claim 5, and therefore anticipates Claim 5.

5. Claim 6

349. Claim 6 depends on Claim 1, and further requires "wherein activating the gaseous cutoff simultaneously activates the liquid cutoff solenoid."

350. The Workshop Manual discloses this limitation:

> When the fuel select switch (8) in the "GASOLINE" position 'D' and the main switch in the 'ON' position, the battery current flows to the gasoline cut off solenoid (6). Therefore gasoline fuel in the float chamber flows to the mixing chamber. When the fuel select switch (8) is turned to the 'LPG' position 'E', the battery current stops to the gasoline cut off solenoid (6) and flows to the LPG cut off solenoid (3) and LPG shut off solenoid valve (9).

Ex. 1012, 68 .

351. A POSA would understand that activating a cutoff solenoid valve in the context of the '034 Patent means changing the position of the valve, i.e. actuating it from either an open position to a closed position or from a closed position to an open position. The switch operation for simultaneously activating the liquid cutoff to stop gasoline flow when the gaseous cutoff is activated is depicted below:

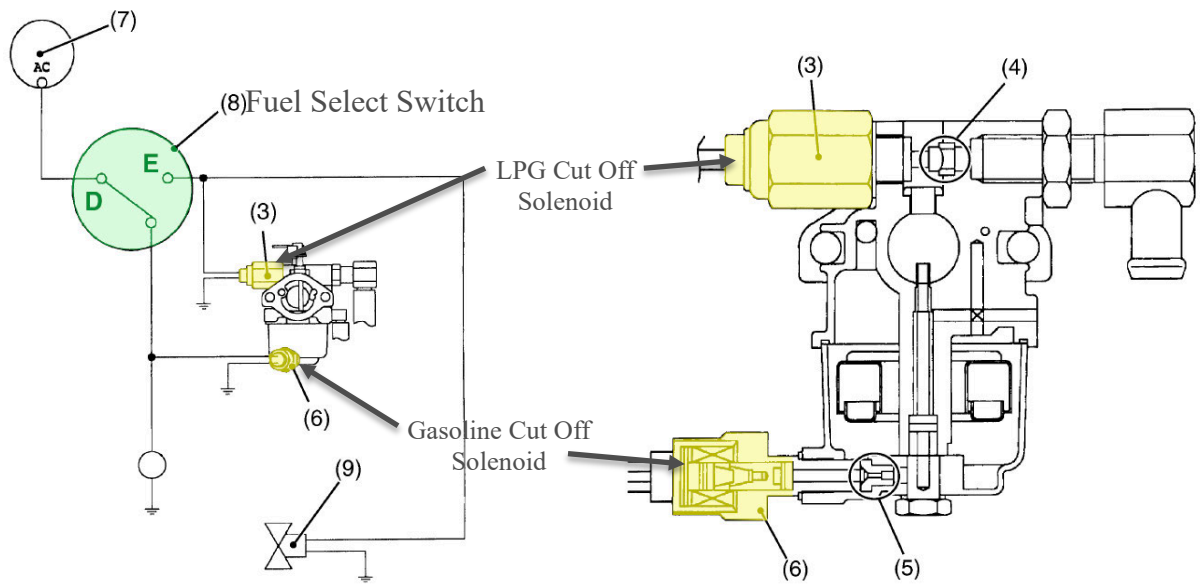

Ex. 1012, 68 (annotations added).

352. As shown, in switching between positions D to E (the "GASOLINE" and "LPG" positions, respectively), the fuel select switch simultaneously connects power to one valve while disconnecting power to the other valve, thus simultaneously closing the Gasoline cut off and opening the LPG cut off, or vice versa.

353. Thus, the Workshop Manual discloses the limitations of Claim 6.

6. Claim 7

354. Claim 7 depends from Claim 1, and further requires "wherein the liquid cutoff solenoid is selectively operable to cut off fuel flow from the float bowl to a nozzle in a venturi of the carburetor upstream from a throttle for the engine."

355. As previously discussed (§§XII.F.1.e and XII.F.2.b, above), the

Workshop Manual's Gasoline Cut Off Solenoid selectively cuts off fuel flow from the float bowl ("Float Chamber") to a nozzle ("Main Nozzle") in a venturi ("Venturi") of the carburetor upstream from a throttle ("Throttle Valve") for the engine, as depicted below:

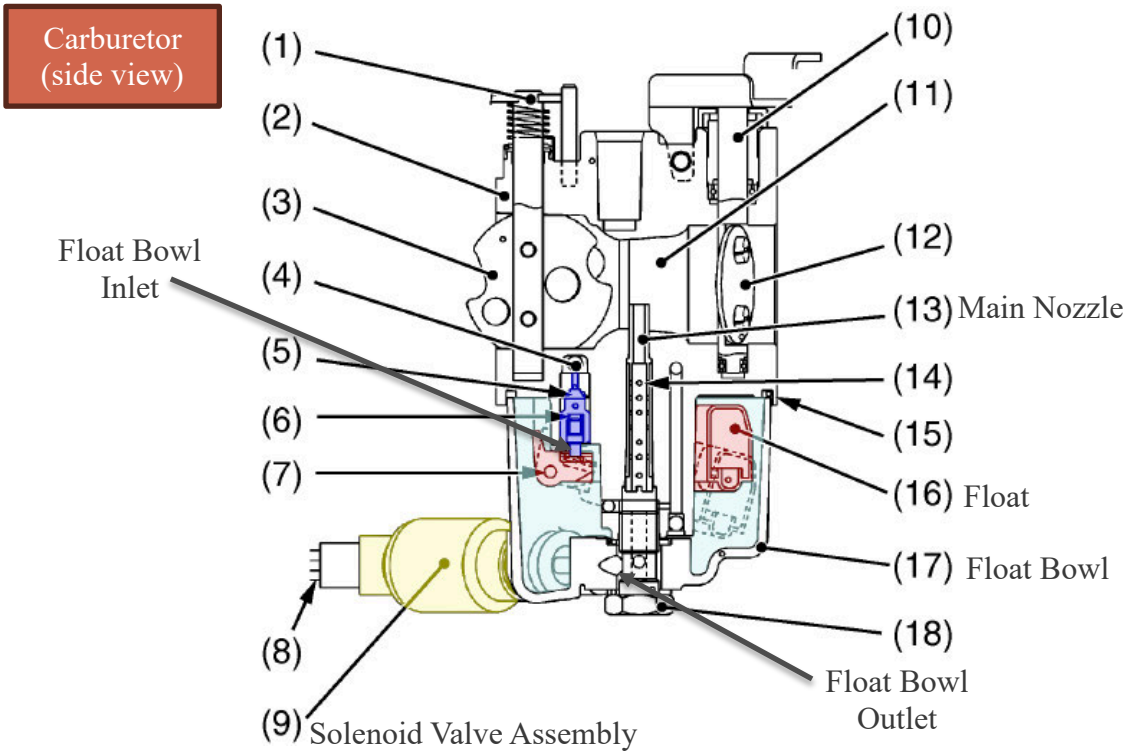

Id., 67 (coloring and annotations added).[10]

[10] In the Workshop Manual, the figure corresponds to the WG972-E2 Carburetor. However, the Workshop Manual confirms that the "DF Carburetor operates the same as a gasoline carburetor in gasoline fuel." Ex. 1012, 68.

Carburetor (side view)

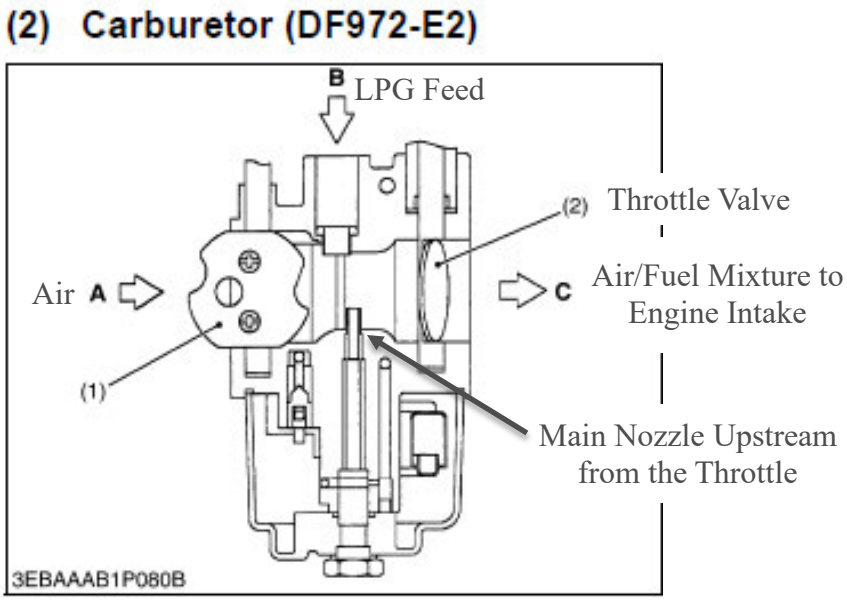

Id., 68 (annotations added).

Carburetor (front view)

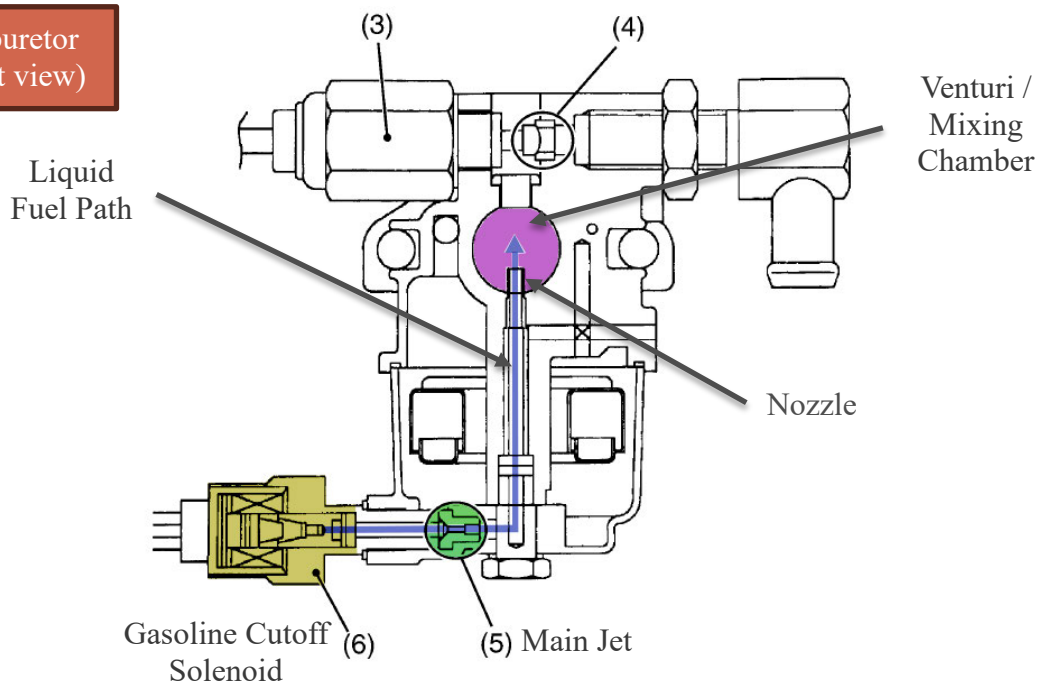

Id., 68 (coloring and annotations added).

356. Specifically, liquid cutoff solenoid (6) operates to stop the flow of

gasoline through the nozzle that extends into the venturi portion of the carburetor throat/mixer, which is upstream from throttle (2). *Id*.; *see also* Ex. 1018, 2:53-62, Figs. 1, 6. As seen in the second side-view figure above, air A flows into the venturi from the left, mixes with fuel exiting the nozzle in the venturi portion of the carburetor, and then the air-fuel mixture flows through the throttle valve to the engine intake via C. *Id*.

357. Thus, the Workshop Manual discloses the added elements of Claim 7 and anticipates it. In addition, for the same reasons as discussed for Claim 2 (§XII.F.2, above), Claim 7 is obvious in further view of Tsuda.

7. Claim 8

358. Claim 8 depends from Claim 1, and further requires that "the carburetor connects the gaseous fuel source to the intake." The Workshop Manual satisfies this claim.

359. The Workshop Manual discloses a carburetor (§XII.F.1.c, above) and a gaseous fuel source (i.e. a "LPG Tank (14)") (§XII.F.1.e, above). The carburetor connects the LPG Tank to the engine intake, as seen in the Workshop Manual figures annotated below:

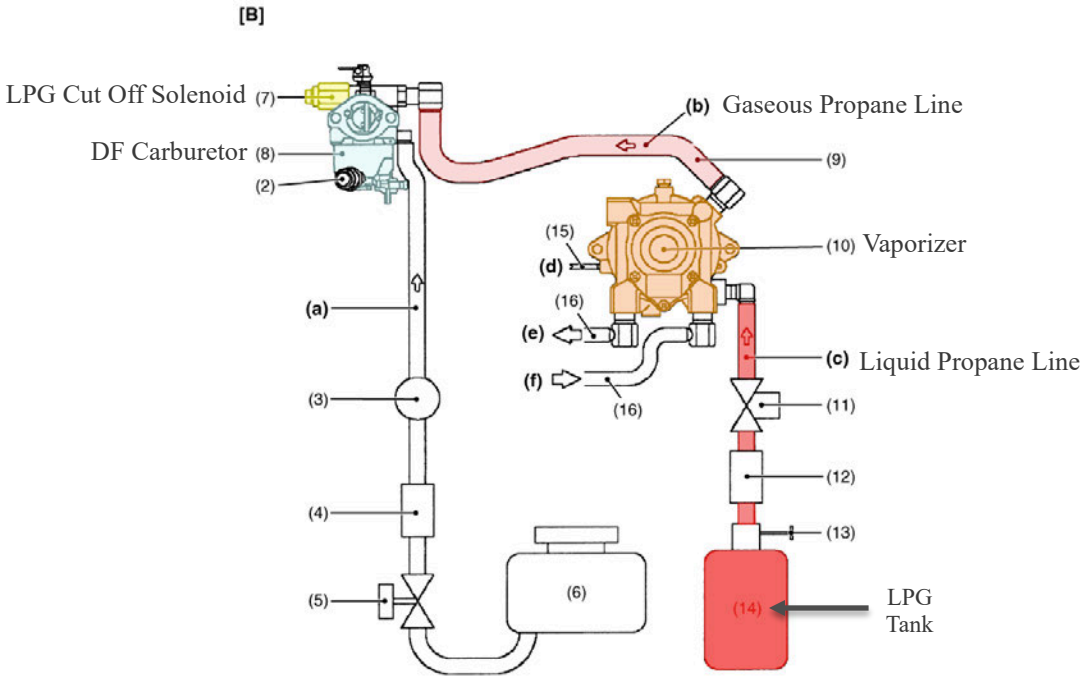

Ex. 1012, 65 (coloring and annotations added).

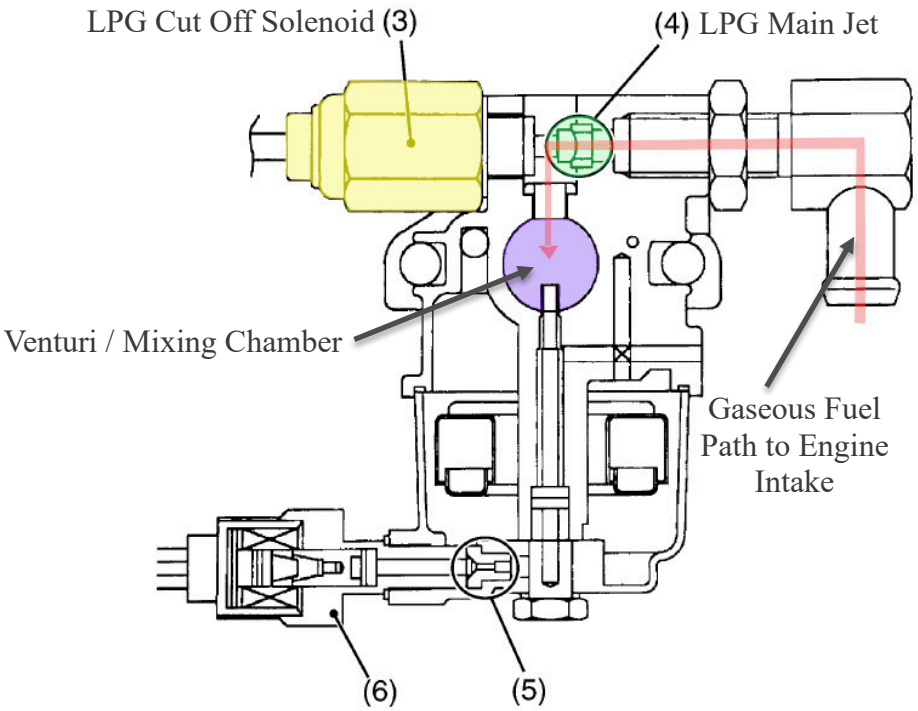

Carburetor (side view)

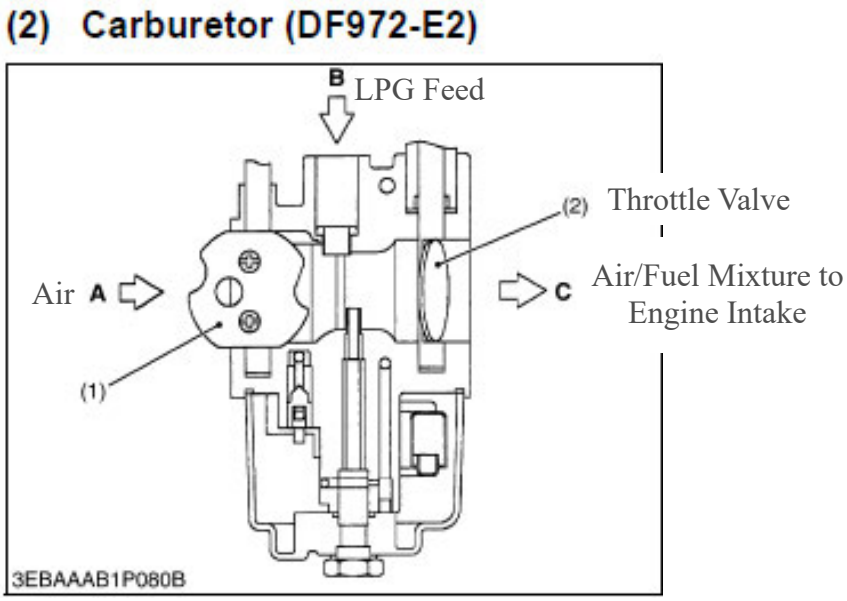

Id., 68 (coloring and annotations added). The carburetor is attached to the engine intake. *See* § XII.F.1.c, above. Thus, the Workshop Manual discloses the added elements of Claim 8 and anticipates it.

8. Claim 9

360. Claim 9 depends from Claim 1, and further requires "a liquid fuel valve positioned on a liquid fuel line coupling the liquid fuel source to the carburetor to open and close the liquid fuel source to the engine."

361. The Workshop Manual discloses a liquid fuel valve (i.e. "Gasoline Cock (5)") and a liquid fuel line (i.e. a "Gasoline Line (a)"). Ex. 1012, 65. The Workshop Manual also discloses a liquid fuel source (i.e. a "Gasoline Tank (6)") and a carburetor. *See* §XII.F.1.c, above.

362. As shown below, the Workshop Manual discloses that the Gasoline

Cock is positioned on the Gasoline Line coupling the Gasoline Tank to the carburetor:

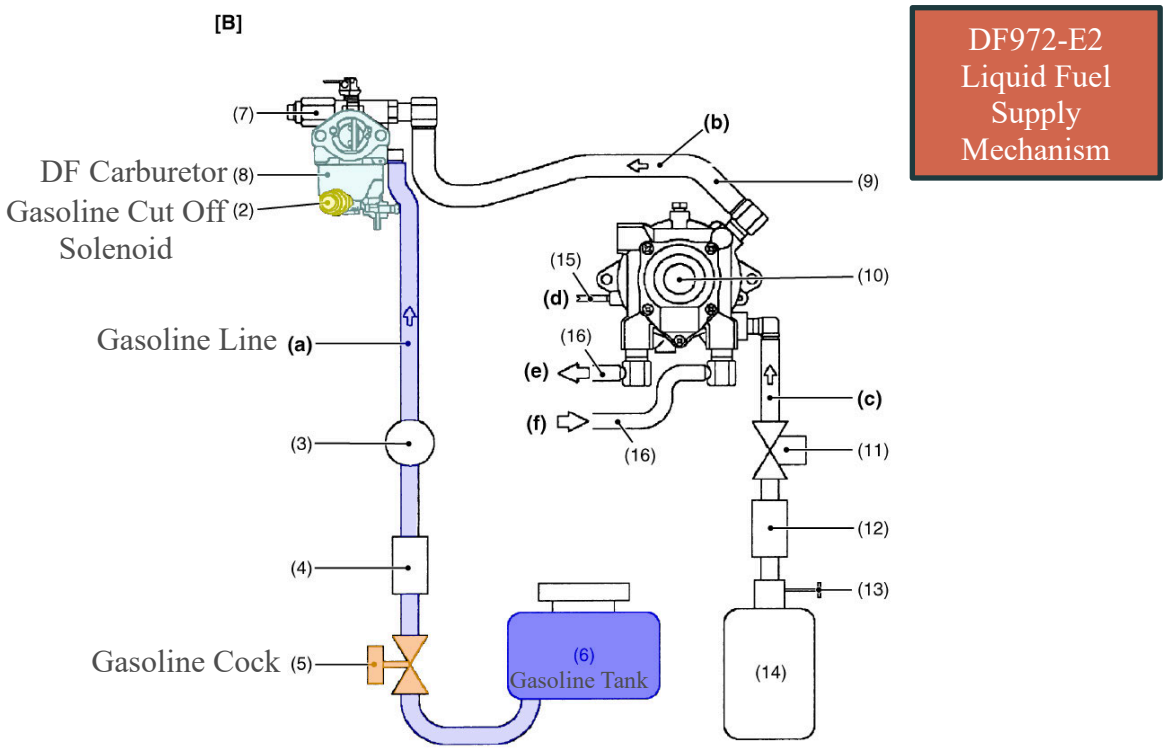

Ex. 1012, 65 (coloring and annotations added). Thus, the Workshop Manual discloses the added elements of Claim 9 and anticipates it.

9. Claim 11

a) Element [11.0] – A multi-fuel generator and fuel delivery system

363. The Workshop Manual discloses a multi-fuel delivery system that delivers fuel to a multi-fuel engine operating in a generator.

364. The Workshop Manual discloses an engine having the model number DF972-E2, which is a "GASOLINE, LPG, NATURAL GAS ENGINE." Ex. 1012,

p.1; *see also* §XII.F.1.a, above. The DF972 engine includes "a rotating magnet type generator" (i.e., an alternator) that "produces higher voltage in slow speed rotation, and charges electric current to the battery during engine idling." Ex. 1012., 25. The Workshop Manual specifies that the alternator outputs 150 W at 12 V. *Id*., 8. Thus, the Workshop Manual discloses a generator, powered by operation of the DF-972 engine.

b) Element [11.1]: a multi-fuel internal combustion engine

365. Element [11.1] requires "a multi-fuel internal combustion engine configured to operate on a liquid fuel supplied from a liquid fuel source through a liquid fuel line and a gaseous fuel supplied from a pressurized fuel source through a gaseous fuel line." As previously discussed, the Workshop Manual discloses a multi-fuel engine. *See* §XII.F.1.b, above.

366. The disclosed DF-972 is an internal combustion engine, where fuel (gasoline or LPG) is combusted inside the engine, ignited by spark plugs:

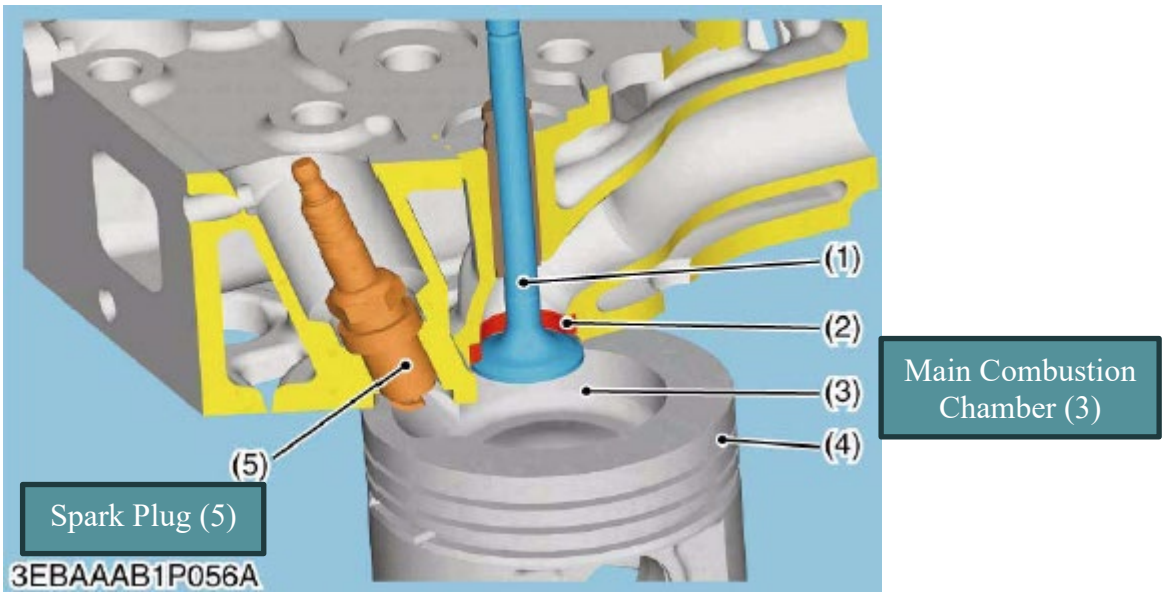

Ex. 1012, 54 (annotations added).

367. A POSA would readily understand that the primary function of a spark plug is to ignite an air-fuel mixture in the combustion chamber to produce power. Fuel is supplied as depicted below, with the gaseous LPG fuel supplied from a pressurized LPG fuel tank through gaseous fuel line:

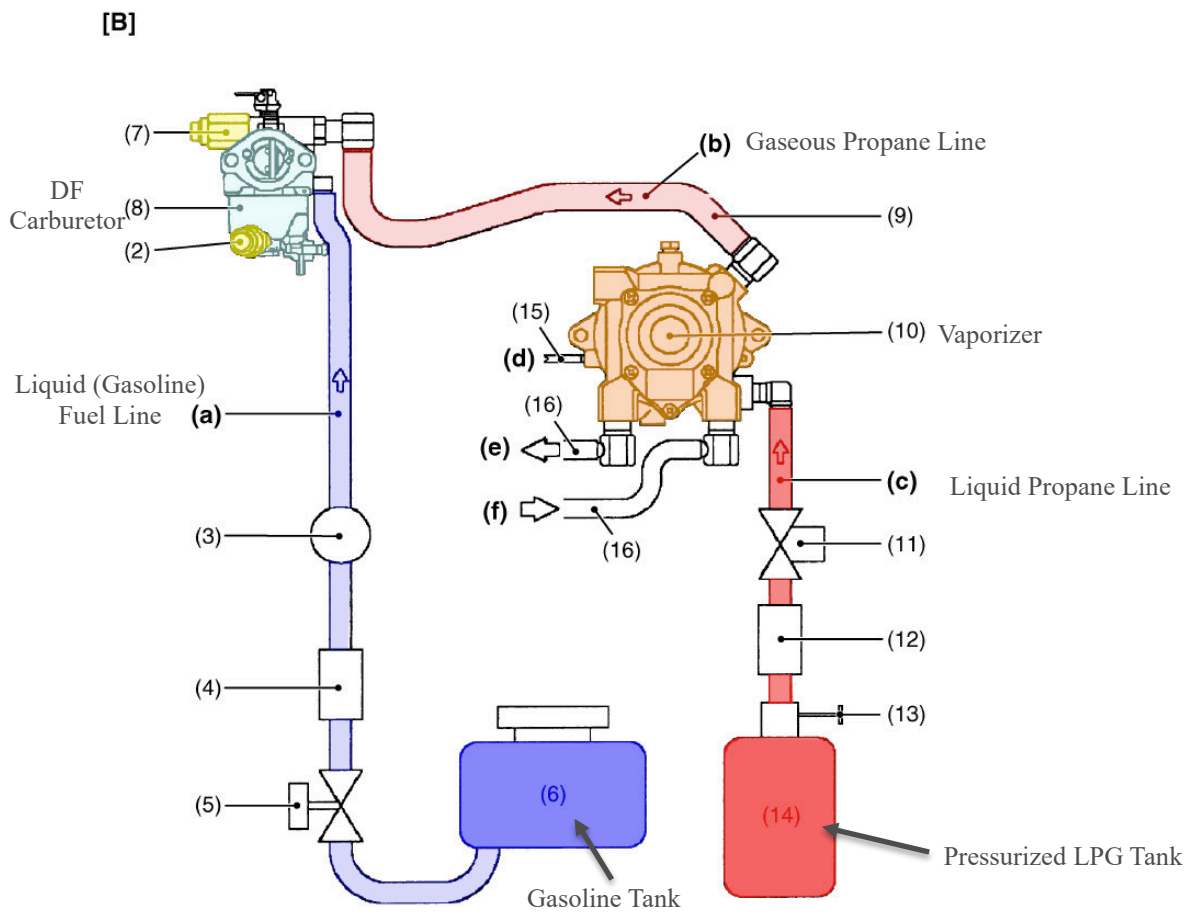

Ex. 1012, 65 (coloring and annotations added) ("For LPG fuel, the liquid fuel stored in the LPG tank (14) is sent to vaporizer (10) ***by pressure in the gaseous phase in the tank***.") (emphasis added).

368. As shown, LPG is stored under pressure in the LPG tank (14). When the LPG Manual Valve (13) is opened, the pressurized LPG (which includes liquid LPG) travels through the Liquid Propane Line (c) until it reaches the Vaporizer (10). The Vaporizer (10) depressurizes the liquid LPG such that it becomes gaseous LPG, which then proceeds to the carburetor through the Gaseous Propane Line (b).

c) Element [11.2]: an alternator

369. Element [11.2] calls for "an alternator driven by the multi-fuel internal combustion engine."

370. In general, a POSA would understand that an alternator is an electrical generator that converts mechanical energy to electrical energy in the form of alternating current. Alternators generally comprise a stator (i.e. a stationary component) and a rotor (i.e. a rotating component) to generate a rotating magnetic field that generates the alternating current.

371. The Workshop Manual confirms that the alternator in the DF972 engine conforms with this general understanding. *See* Ex. 1012, 77 (describing the construction of the alternator); *see also id*., 8, 94, 111, 132. Given that the alternator is disclosed as part of the "Charging System," a POSA appreciated that the alternator provides electrical power.

372. The Workshop Manual also discloses an "Alternator on Unit Test" that indicates the alternator is driven by the engine. For example, the Workshop Manual says that "When the engine is operating measure the voltage between two battery terminals. If the voltage is between 13.8 V and 14.8 V, the alternator is operating normally." A POSA would understand that the test requires the engine to be running because the alternator generates electrical power when the engine is running. *Id.*, 111.

d) Element [11.3]: a fuel regulator system

373. Element [11.3] requires "a fuel regulator system," which the specification describes as including

> one or more pressure regulators that reduce and control the pressure of the fuel from pressurized fuel container [] and delivers fuel at a desired pressure for operation of the engine.

Ex. 1001, 4:8-13.

374. The Workshop Manual's disclosed fuel regulatory system (i.e. "Fuel System") is shown below:

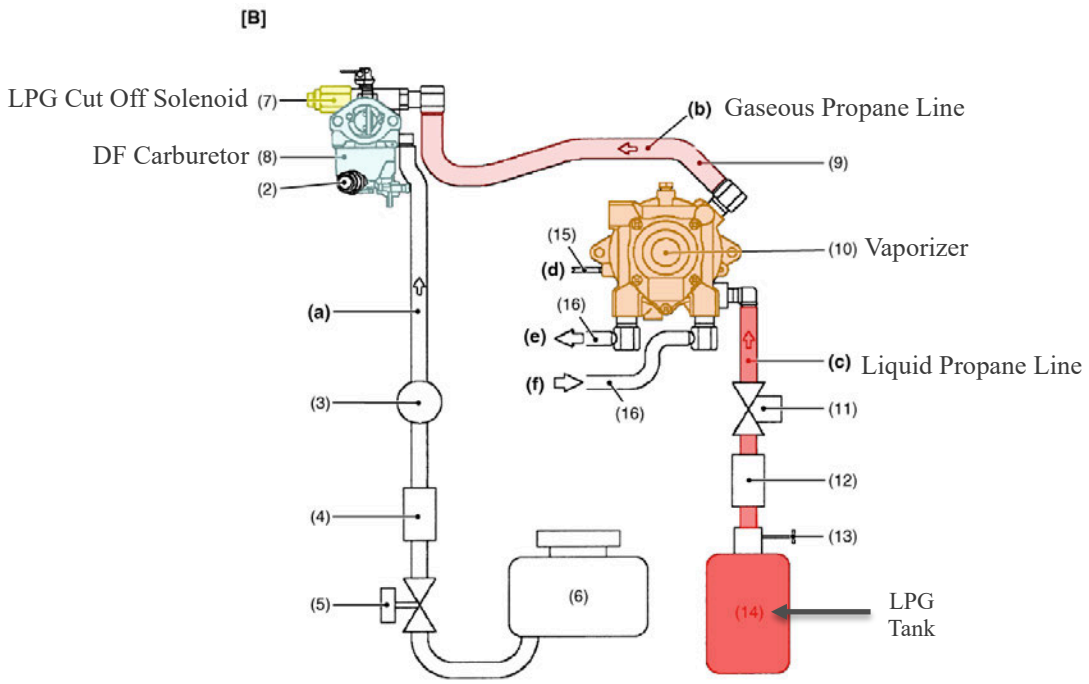

Ex. 1012, 65 (coloring and annotations added).

375. The Workshop Manual explains that:

> For LPG fuel, the liquid fuel stored in the LPG tank (14) is sent to vaporizer (10) by pressure in the gaseous phase in the tank through the LPG filter (12) and LPG shut off solenoid valve (11). The liquid fuel is evaporated in vaporizer and is sent to the DF carburetor (8) as a gaseous fuel of gas pressure near the atmospheric pressure.

Id.

376. For LPG to be stored as a liquid it must be pressured to approximately 100 psig (with the exact pressure depending on the ambient temperature). Thus, the vaporizer must depressurize the LPG so that it can be sent to the carburetor at near atmospheric pressure (near 0 psig). The vaporizer includes primary and secondary chambers. The primary chamber (3) decompresses (and therefore, evaporates) the liquid LPG. The evaporated LPG then passes to the secondary chamber (1), which is further decompressed such that the gaseous LPG is depressurized to near-atmospheric pressure, i.e., the pressure desired for engine operation. Ex. 1012, 69.

377. The Workshop Manual includes a detailed figure of the vaporizer:

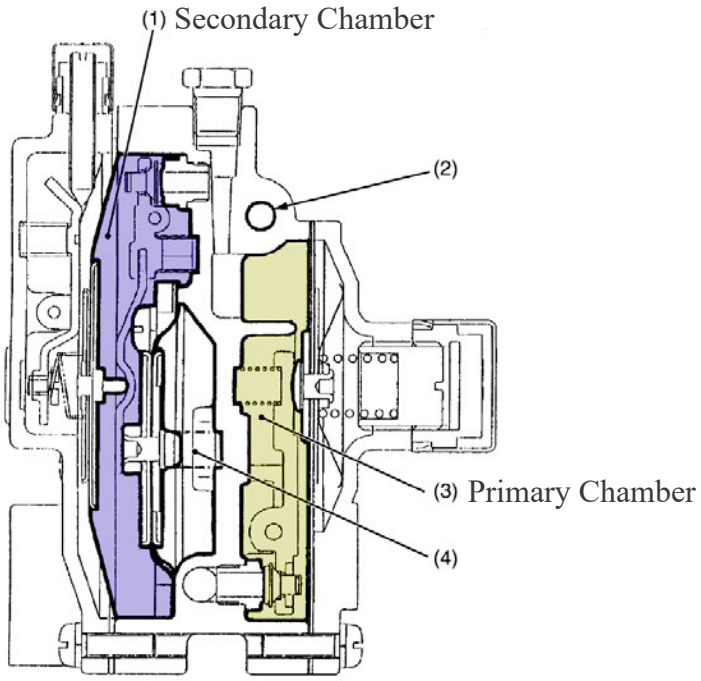

Ex. 1012, 69 (coloring and annotations added). The Workshop Manual also describes the operation of the vaporizer. *Id*.

378. Thus, the vaporizer operates as the claimed "fuel regulator system" to reduce and control the pressure of LPG from pressurized LPG container 14 and delivers it at the desired pressure for operation of the DF-972 engine. *See id*., 69–71.

e) Element [11.4]: a primary pressure regulator

379. Element [11.4] requires that the fuel regulator system comprise "a primary pressure regulator coupled to a service valve of the pressurized fuel source to regulate fuel supplied from the pressurized fuel source to a reduced pressure."

380. The DF-972 obtains LPG fuel from the pressurized LPG tank, which

has a service valve on its outlet (i.e., "LPG Manual Valve" (13)), to which vaporizer (10) is coupled:

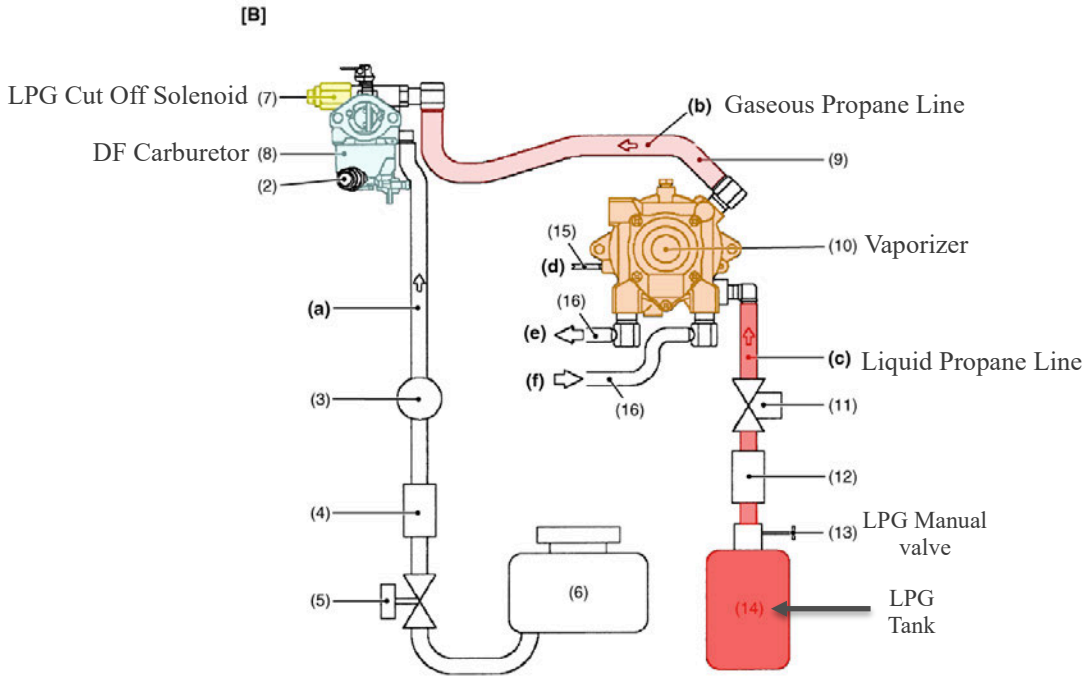

Ex. 1012, 65 (coloring and annotations added).

381. The Workshop Manual shows and describes the vaporizer as follows:

[3] VAPORIZER (DF972-E2)

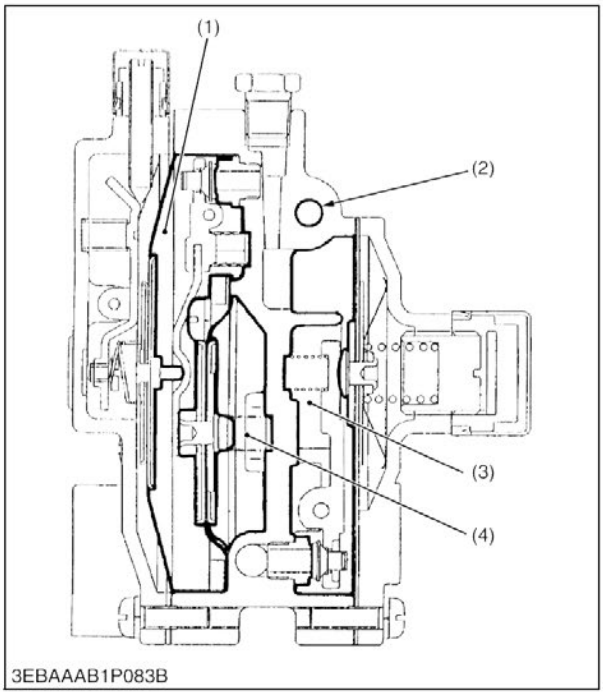

Vaporizer is a device which converts the liquid fuel into the gaseous fuel and the following structures and functions are possessed.

■ **Primary Chamber**

The liquid fuel is decompressed (the first decompression) and it is evaporated.

■ **Secondary Chamber**

The fuel which flows in is decompressed from the primary chamber to the vicinity of the atmospheric pressure further (the second decompression).

■ **Water Passage**

The coolant of the engine is made to circulate as a heat source to evaporate the LPG.

■ **Vacuum Lock Chamber**

When the engine stops, the fuel from primary chamber is prevented from flowing out.

(1) Secondary Chamber
(2) Water Passage
(3) Primary Chamber
(4) Vacuum Lock Chamber

9Y1210318ENM0033US0

Id., 69.

382. The Workshop Manual thus discloses a primary pressure regulator (i.e. the "Primary Chamber" of the vaporizer) coupled to the service valve (i.e. LPG Manual Valve (13)), whereby the fuel from the pressurized fuel tank is regulated to a reduced pressure. *Id.*, 69 (explaining that in the Primary Chamber, the "liquid fuel is ***decompressed*** (the first decompression) and it is evaporated." (emphasis added))

383. More specifically, the Workshop Manual shows first pressure regulator/"Primary Chamber" as follows:

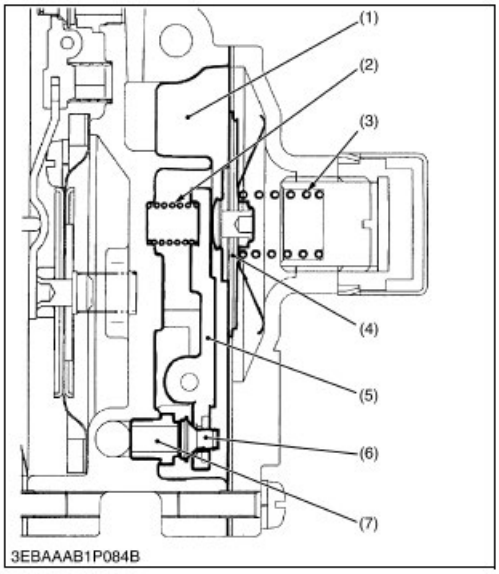

Primary Chamber

The liquid fuel which pushes the primary valve (6) open passes between the valve and the valve seat (7), enters primary chamber (1), and decompresses and is evaporated.

When the inflow of the fuel continues and the primary chamber pressure rises more than the specified pressure 32.7 kPa (0.3 kgf/cm^2, 4.3 psi), the tension in the diaphragm spring (3) is overcome and do the push up of primary diaphragm (4).

At this time, do the push up of primary valve lever spring (2) of primary valve lever (5), primary valve (6) is shut, and the inflow of the fuel is intercepted.

The tension in the diaphragm spring (3) grows more than the primary chamber pressure when the fuel is consumed and the primary chamber pressure lowers more than a regulated value and a primary diaphragm is depressed below.

The primary valve lever (5) is depressed at the same time.

A primary valve opens and the fuel flows in again.

When the diaphragm tears by any chance and the fuel flows in the primary diaphragm spring side, the primary diaphragm spring side is connected with second chamber in the balance passage so that the fuel should not flow out outside.

(1) Primary Chamber
(2) Primary Valve Lever Spring
(3) Primary Diaphragm Spring
(4) Primary Diaphragm
(5) Primary Valve Lever
(6) Primary Valve
(7) Valve Seat

Id., 70. The Workshop Manual thus discloses a primary pressure regulator, i.e., the primary chamber within the vaporizer that is coupled to the service valve of the pressurized tank 14, which regulates fuel supplied from pressurized tank 14 to a reduced pressure

f) Element [11.5]: a secondary pressure regulator

384. Element [11.5] requires "a secondary pressure regulator coupled to the primary pressure regulator to regulate fuel supplied from the primary pressure regulator to a desired pressure for delivery through the gaseous fuel line to operate the engine."

385. The Workshop Manual discloses a secondary pressure regulator (i.e. the "Secondary Chamber" of the vaporizer) coupled to the primary pressure

regulator (i.e. the "Primary Chamber") to regulate fuel supplied from the Primary Chamber to a desired pressure for delivery through the gaseous fuel line to the DF-972 engine. *See* §XII.F.9.e, above; *see also* Ex. 1012, 69. The Workshop Manual depicts the Secondary Chamber and explains that:

> The fuel adjusted with primary chamber to the specified pressure enters secondary chamber (5) between secondary valve (1) and the valve seat (2) and is decompressed to the vicinity of the atmospheric pressure almost.

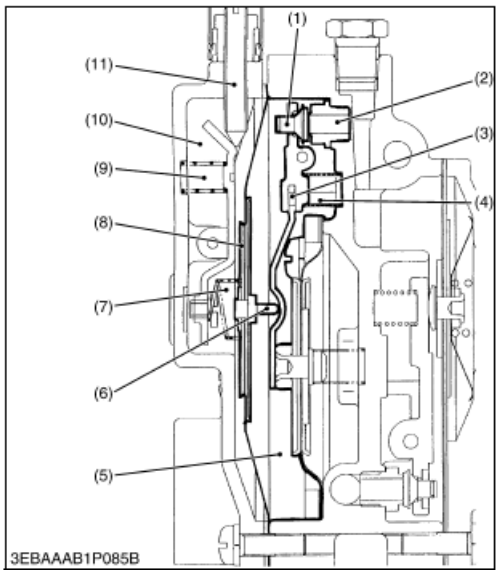

(1) Secondary Valve
(2) Valve Seat
(3) Secondary Valve Lever
(4) Secondary Valve Lever Spring
(5) Secondary Chamber
(6) Diaphragm Pin
(7) Balance Spring
(8) Secondary Diaphragm
(9) Balance Lever Spring
(10) Atmosphere Chamber
(11) Idle Adjust Screw

Ex. 1012, 71.

386. Thus, the vaporizer's Secondary Chamber further reduces the LPG pressure to near atmospheric pressure for delivery to the carburetor of the DF-972 engine.

g) Element [11.6]: an electro-mechanical valve system with an electrical switch

387. Element [11.6] requires "an electro-mechanical valve system coupled to the engine and operated by an electrical switch powered by one of the alternator, a battery, and a magneto that controls fuel flow to the engine from the liquid fuel source and the pressurized fuel source."

388. The Workshop Manual discloses an electro-mechanical valve system (i.e. a "Fuel System") with an electrical switch (i.e. a "Fuel Select Switch"). *See* Ex. 1012, 68 ; *see also* §XII.F.1.g, above. The Fuel System includes electro-mechanical valves, such as the "LPG Shut Off Solenoid Valve." *Id.* The Fuel Select Switch is powered by a battery and controls fuel flow to the engine from the liquid fuel source (i.e. the Gasoline Tank) and the pressurized fuel source (i.e. the "LPG Tank"), explained in the Workshop Manual as follows:

> With the fuel select switch (8) in the "GASOLINE" position 'D' and the main switch in the 'ON' position, the battery current flows to the gasoline cut off solenoid (6). Therefore gasoline fuel in the float chamber flows to the mixing chamber. When the fuel select switch (8) is turned to the 'LPG' position 'E', the battery current stops to the gasoline cut off solenoid (6) and flows to the LPG cut off solenoid (3) and LPG shut off solenoid valve (9). . . . When the main switch (7) turned to the 'OFF' position, the battery current stops to the both of (sic) solenoids.

Id., 68.

389. The Workshop Manual further shows the operation of electro-mechanical valve system (i.e., the gasoline and LPG cut off solenoids) and electrical switch:

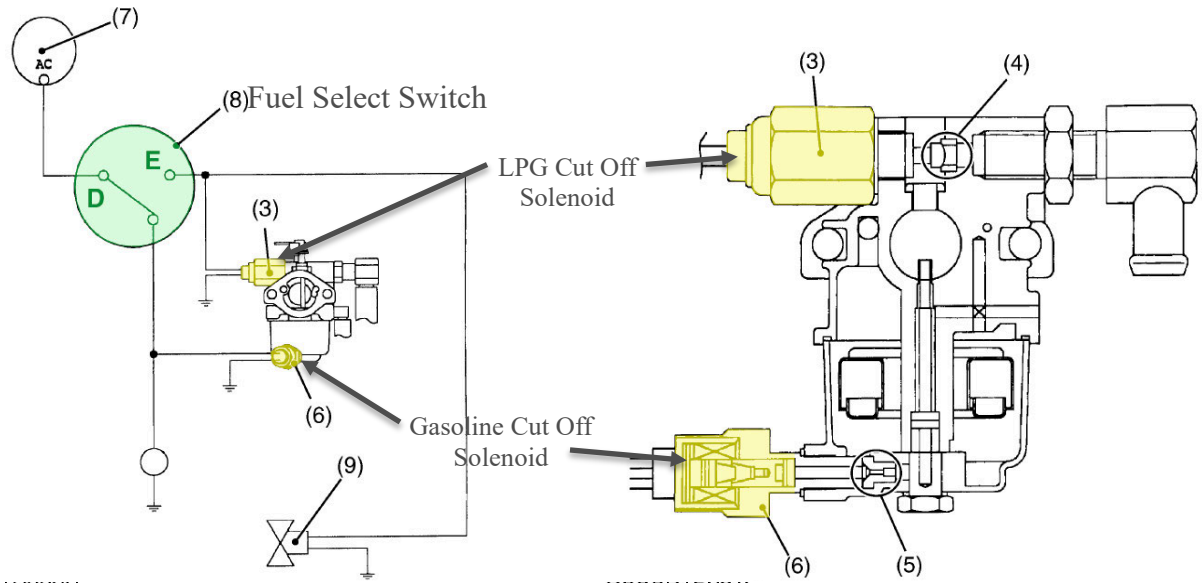

Id. (coloring and annotations added). The Workshop Manual thus discloses all elements of Claim 11 and anticipates it.

10. Claim 12

390. Claim 12 depends from Claim 11, and further requires "wherein the electro-mechanical valve system is configured to switch operation of the generator from multiple fuel sources while the generator is running."

391. The DF-972's Fuel Select Switch can be toggled between positions D (gasoline) and E (LPG) and is therefore configured to switch between the fuels

used for generator/engine operation:

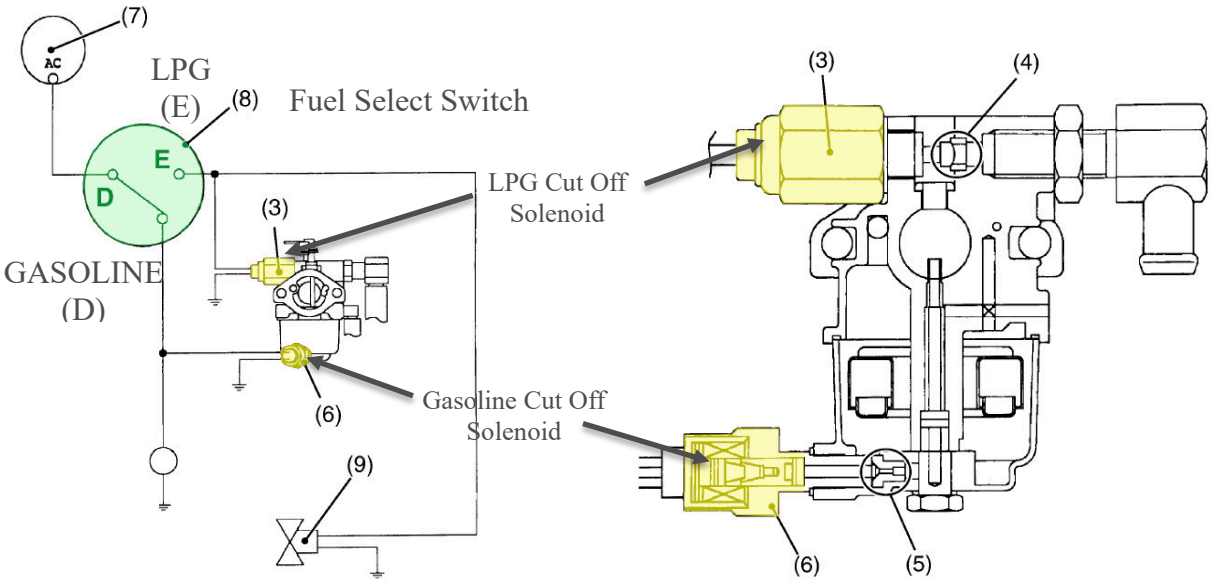

Ex. 1012, 68 (annotations added); *see also* §§XII.F.1.f, XII.F.9.g, above.

392. A POSA would have understood that the switch could be toggled between positions "D" (Gasoline Position) and "E" (LPG Position) to switch between fuel sources while the generator/engine is running via operation of the electro-mechanical valve system (i.e., the gasoline and LPG cut off solenoids). *Id*. As discussed previously, this understanding is further confirmed by the Operator's Manual. *See* §XII.F.3, above (quoting Ex. 1013, 7).

393. Should the Workshop Manual be deemed to not sufficiently disclose allowing for switching between fuel sources <u>while the generator is running</u>, it would have been obvious to a POSA to combine the teachings of the Workshop Manual and Operator's Manual to satisfy this limitation, for the same reasons and

with the same expectation of success as previously discussed. *Id*.

394. Thus, I conclude that the Workshop Manual anticipates Claim 12. In addition, Claim 12 is obvious in view of the Workshop and Operator's Manuals.

11. Claim 13

395. Claim 13 depends from Claim 11, and further requires "wherein the electro-mechanical valve system is configured to prevent simultaneous delivery of the liquid fuel and the gaseous fuel to the engine."

396. The Workshop Manual discloses this claim limitation, as previously discussed. *See* §§XII.F.3, XII.F.5, above. Specifically, the gasoline and LPG cut off solenoids are configured to operate such that when one solenoid valve is open by virtue of the Fuel Select Switch position, the other solenoid valve is closed, thereby preventing the simultaneous delivery of liquid and gaseous fuel to the engine. *Id*.

397. The Workshop Manual thus anticipates Claim 13.

12. Claim 14

398. Claim 14 depends from Claim 11.

a) Element [14.1]: carburetor cutoff

399. Element [14.1] requires "a carburetor cutoff solenoid coupled to a carburetor to control liquid fuel flow to the engine." As already discussed, the Workshop Manual discloses the claimed carburetor cutoff solenoid (i.e., the "Gasoline Cut Off Solenoid"), which is coupled to the carburetor to control liquid

fuel flow to the engine. *See* §§XII.F.1.d, XII.F.2.a and XII.F.9.d, above.

b) Element [14.2]: gaseous fuel cutoff

400. Element [14.2] requires "a gaseous fuel cutoff solenoid coupled to the gaseous fuel line to control flow of the gaseous fuel to the engine." As already discussed, the Workshop Manual discloses the claimed gaseous fuel cutoff solenoid (i.e., the "LPG Cut Off Solenoid"), which controls flow of the gaseous fuel to the engine through gaseous fuel line (b). *See* §§XII.F.1.e and XII.F.2.b, above.

401. Thus, the Workshop Manual discloses the limitations of Claim 14, and therefore anticipates Claim 14.

13. Claim 17

402. Claim 17 depends from Claim 11, and further requires "wherein a dual stage pressure regulator comprises the primary pressure regulator and the secondary pressure regulator."

403. As explained for Claim Elements [11.4] and [11.5], the Workshop Manual discloses a vaporizer having primary and secondary chambers that satisfy the primary and secondary pressure regulator requirements of Claim 11. See §§XII.F.9.e–f. Therefore, a POSA would understand that the vaporizer is a dual stage pressure regulator.

14. Claim 18

a) Element [18.0]: a multi-fuel internal combustion engine

404. The Workshop Manual discloses a multi-fuel internal combustion engine. *See* §§XII.F.1.a and XII.F.9.b above.

b) Element [18.1]: an engine operable on liquid and gaseous fuel

405. Element [18.1] requires "an engine operable on liquid fuel supplied through a liquid fuel line from a liquid fuel source and gaseous fuel supplied through a gaseous fuel line from a pressurized fuel source." As previously discussed, the Workshop Manual discloses this Element. *See* §§XII.F.1.a and XII.F.9.b, above.

c) Element [18.2]: a carburetor

406. Element [18.2] requires "a carburetor coupled to an intake of the engine to mix air and fuel and connect to the liquid fuel line and the gaseous fuel line." As previously discussed, the Workshop Manual discloses this limitation. *See* §§XII.F.1.c and XII.F.2.b above.

d) Element [18.3]: a carburetor cutoff solenoid

407. Element [18.3] requires "a carburetor cutoff solenoid coupled to control fuel flow within the carburetor from the liquid fuel line and selectively engage engine operation on liquid fuel." For purposes of this declaration, I assume that this claim term refers to the solenoid being "coupled" to the carburetor,

following similar language in claim elements [1.3] and [14.1].

408. As discussed previously, the Workshop Manual discloses this limitation. *See* §§XII.F.1.d, XII.F.2.a, XII.F.14.2.a and XII.F.9.d, above.

e) Element [18.4]: a gaseous fuel valve

409. Element [18.4] recites "a gaseous fuel valve coupled to control fuel flow through the gaseous fuel line and selectively engage engine operation on gaseous fuel."

410. As discussed previously, the Workshop Manual discloses this limitation. *See* §§XII.F.1.e, XII.F.2.b and XII.F.9.d, above.

411. Thus, the Workshop Manual discloses the limitations of Claim 18, and therefore anticipates Claim 18.

15. Claim 19

412. Claim 19 depends from Claim 18 and further requires "wherein the gaseous fuel valve comprises a gaseous fuel cutoff solenoid." As previously discussed, the Workshop Manual discloses this limitation. *See* §§XII.F.1.e and XII.F.2.b, above.

413. Thus, the Workshop Manual discloses the added limitations of Claim 19, and therefore anticipates Claim 19.

16. Claim 20

414. Claim 20 depends from Claim 19, and further requires "a switch to change operation of the engine from liquid fuel to gaseous fuel and from gaseous

fuel to liquid fuel while the engine is running." As previously discussed, the Workshop Manual discloses this Element. *See* §§XII.F.1.f and XII.F.3, above.

415. Should the Workshop Manual be deemed to not sufficiently disclose a switch that changes between fuel sources while the engine is running, it would have been obvious to a POSA to combine the teachings of the Workshop Manual and Operator's Manual to satisfy this limitation, for the same reasons and with the same expectation of success as previously discussed. *Id*.

416. Thus, I conclude that the Workshop Manual anticipates Claim 20. In addition, Claim 20 is obvious in view of the Workshop and Operator's Manuals.

17. Claim 22

417. Claim 22 depends from Claim 20 and further requires "wherein the switch operates the carburetor cutoff solenoid and the gaseous fuel cutoff solenoid to substantially prevent simultaneous fuel delivery of the liquid fuel and the gaseous fuel to the engine." As previously discussed, the Workshop Manual discloses this limitation. *See* §§XII.F.1.f, XII.F.3 and XII.F.6, above.

418. Thus, the Workshop Manual discloses the added limitations of Claim 22, and therefore anticipates Claim 22.

18. Claim 23

419. Claim 23 depends from Claim 20 and further requires "wherein the gaseous fuel cutoff solenoid and the carburetor cutoff solenoid operate as normally

closed solenoid valves."

420. As previously discussed, the Workshop Manual discloses a gaseous fuel cutoff solenoid (i.e. an "LPG Cut Off Solenoid"). *See* §§XII.F.1.e, XII.F.2.b, XII.F.12.b and XII.F.14.b, above. The Workshop Manual also discloses a carburetor cut off solenoid (i.e. an "Gasoline Cut Off Solenoid"). *See* §§XII.F.1.d, XII.F.1.f, XII.F.2.a, XII.F.9.d and XII.F.14.d, above.

421. The Workshop Manual teaches that "both gasoline fuel and LPG fuel can not flow to the mixing chamber" when "current stop to the both of [sic] solenoids." Ex. 1012, 68; *see also id*. ("When the fuel select switch (8) is turned to the 'LPG' position 'E', the battery current stops to the gasoline cut off solenoid (6) and flows to the LPG cut off solenoid (3) and LPG shut off solenoid valve (9)."). A POSA would understand that valves that only open when a current is applied are "normally closed," thus meeting this claim limitation.

G. Ground 7: Claim 4 is obvious over the Workshop Manual in view of Duffy

422. Claim 4 of the '034 Patent is obvious as described below.

423. Claim 4 depends from Claim 1, and further requires "wherein the switch actuates the liquid cutoff solenoid to provide fuel overlap when changing engine operation between the liquid fuel and the gaseous fuel."

424. Although the Workshop Manual does not expressly disclose a specific timing for operating its gasoline and LPG cutoff valves, it would have been

obvious to add a time-delay circuit to the liquid cutoff solenoid to practice the sequence claimed in Claim 4 for the same reasons described in §XII.B.1, above. In view of Duffy, a POSA would have had a reasonable expectation of success in implementing a control circuit for achieving the claimed fuel overlap in the Workshop Manual's engine, especially since the liquid and gaseous fuel cutoffs are already taught as solenoids in the Workshop Manual, making their control easy and routine to a POSA.

H. Ground 8: Claims 16 and 24 are obvious over the Workshop Manual in view of Parlatore and/or the Tri-Fuel Video

425. Claim 16 and 24 of the '034 Patent are obvious as described below.

1. Claim 16

426. Claim 16 depends from Claim 11, and further requires "wherein the pressurized fuel source comprises a pressurized fuel container located off-board the generator having a regulator mounting device to secure at least the secondary pressure regulator thereto."

427. Parlatore discloses a regulator mounting device to secure the secondary pressure regulator to the LPG tank, as shown below:

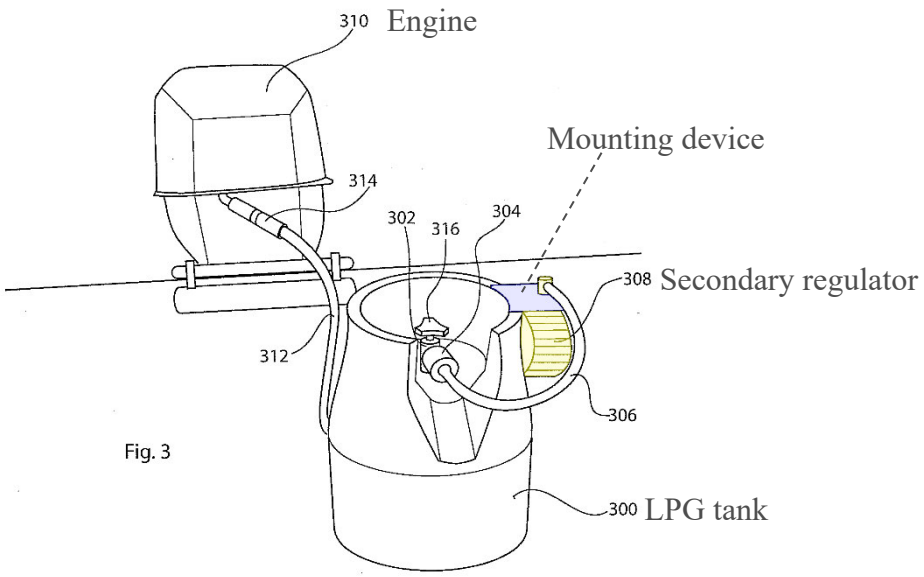

Ex. 1010, Fig. 3 (coloring and annotations added).

428. The LPG tank is connected to the engine through hose 312, as shown below:

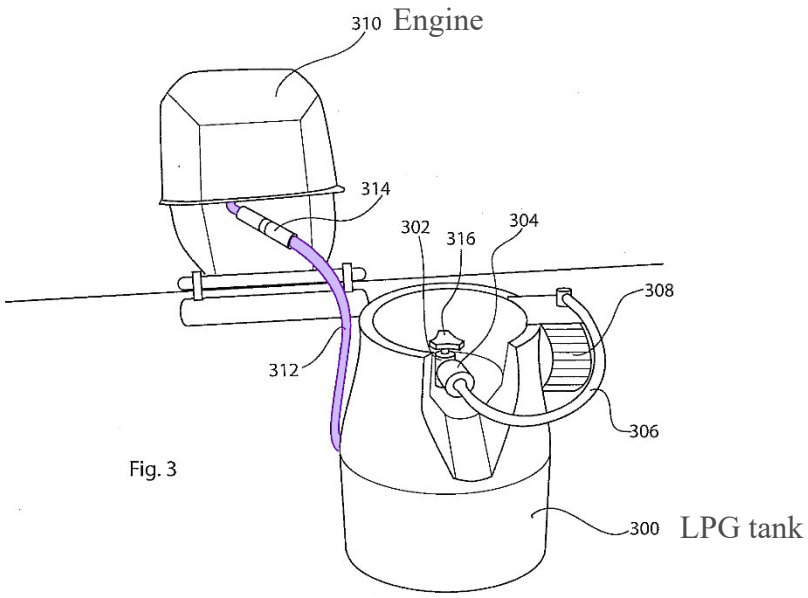

Id. (coloring and annotations added).

429. A POSA would have been motivated to combine the off-board LPG tank in Parlatore with the dual-fuel engine in the Workshop Manual for a number of reasons. For example, an external propane tank can be larger than one physically integrated into the generator/engine. A larger tank increases the generator's runtime without needing frequent refueling.

430. An off-board LPG tank would also help the generator be more portable. Including a large built-in LPG tank would add significant weight and bulk, making the unit harder to move.

431. Using an off-board LPG tank would also improve safety. Remote tanks can be placed at a safer distance from hot generator parts, reducing fire hazards.

432. Finally, an off-board LPG tank would be more convenient to refuel. When the LPG supply runs out, it is easier and faster to swap out a remote tank than to refill or replace an integrated tank.

433. A POSA would also have been motivated to include a pressure regulator mounting device on the off-board tank for multiple reasons.

434. The LPG from a storage tank is typically at a much higher pressure than what a generator's engine can safely use. Pressure regulators are needed to reduce the gas pressure to a usable level. Mounting the regulators directly at or near the off-board tank, as expressly taught in Parlatore, has several obvious

advantages.

435. For example, a mounting device on or near the off-board tank ensures that only low-pressure gas is delivered downstream to the generator, improving safety and reducing the potential harm resulting from damage to hoses, valves, or other mechanical parts between the second regulator and the generator/engine. For that reason, it was (and still is) standard practice for propane systems (like grills, RVs, heaters) to place the regulator as close to the tank as possible. Such a placement improves safety because if there is a leak or rupture in the line between the tank and generator, having the LPG pressure already reduced minimizes the risk of a more dangerous high-pressure release.

436. Regulators mounted at the tank can also be easily inspected, replaced, or adjusted without needing to modify or access the generator.

437. Thus, a POSA would immediately recognize that mounting the regulators at the off-board LPG tank, as expressly taught in Parlatore via its mounting mechanism for regulator 308, is a simple, logical, and convenient approach to ensure safe, reliable, and effective operation.

2. Claim 24

438. Claim 24 depends from Claim 18, and requires four additional elements.

a) Element [24.1]: an alternator

439. Element [24.1] requires "an alternator driven by the engine to form a generator." Regarding Element [24.1], the Workshop Manual discloses this limitation. *See* § XII.F.9.c, above.

b) Element [24.2]: a fuel regulator system located off-board the generator

440. Element [24.1] requires "a fuel regulator system located off-board the generator." Regarding Element [24.2], the Workshop Manual discloses a fuel regulator system. *See* § XII.F.9.d, above. While the Workshop Manual does not expressly describe that the fuel regulator system is located off-board the generator, the Tri-Fuel Video (Ex. 1021) teaches a multi-fuel generator with a remote, off-board fuel regulator system having the claimed primary and secondary regulators.

441. For example, the Tri-Fuel Video discloses a dual-fuel generator. Ex. 1012 at 1:13-1:55. The Tri-Fuel Video further explains that "if you wanna run the generator with the propane or natural gas, we do need a hose and we need a couple more regulators." *Id.*, 1:46-2:16. The Tri-Fuel Video then shows a generic propane tank connected to the dual-fuel generator with a hose. *Id.* 1:56-1:01. The Tri-Fuel Video further shows two regulators attached to the standard propane tank—a first regulator to change the "high pressure of the gas to about ½ PSI," and a second regulator that will output a pressure of -0.5 water column. *Id.* 1:01-3:23.

Id., 5:18 (annotations added).

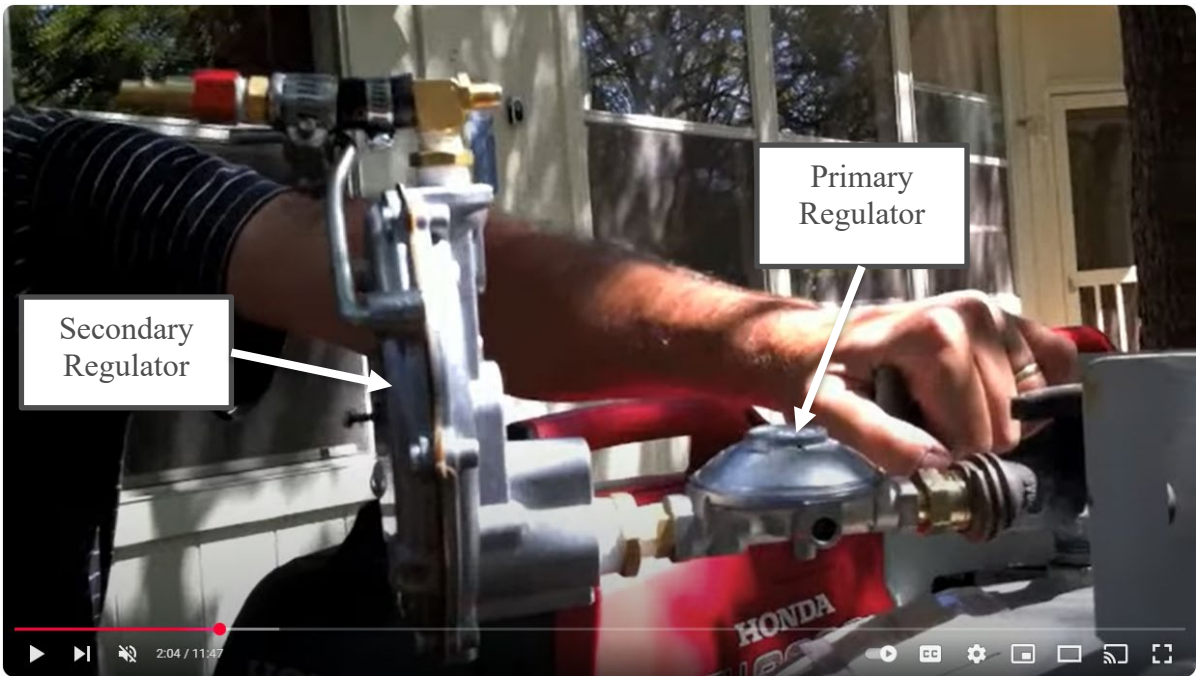

Id., 2:04 (annotations added).

442. Parlatore also discloses an off-board fuel regulator system as required by this element. *See* §§XII.D.1.d, XII.E.3.b-d, above.

443. A POSA would have found it obvious to locate the Workshop Manual's fuel regulator system off-board the generator, as explained below.

(1) *Motivation to Combine / Reasonable Expectation of Success*

444. A POSA would have been aware of various benefits to using an off-board fuel regulator system. In general, using an off-board fuel regulator system would allow the generator/engine itself to remain lighter, more compact, and easier to transport, while still safely handling high-pressure fuel sources like LPG remote from the engine.

445. Specifically, keeping the regulator system off-board reduces the weight and bulk of the generator. Since portability is a key feature for many generators, minimizing onboard components is an obvious design goal.

446. An off-board fuel regulator system also makes the overall generator system more flexible. An off-board regulator system can be matched to different fuel tanks and pressure ratings. This allows a single generator model to work with multiple tank sizes and types without redesigning the generator itself.

447. An off-board fuel regulator system also improves safety. Placing pressure regulators as close as possible to the high-pressure source (i.e., the tank) reduces the risk of hose rupture or leaks at high pressure and the danger associated with any such leaks or ruptures. An off-board regulator system achieves this, making the overall design safer.

448. Another key benefit is ease of transport and storage. A detachable fuel regulator system can be stored safely away from the generator or swapped out easily. This modular approach means users can keep multiple tanks and simply rotate as needed, rather than needing to re-fill an onboard tank.

449. The Tri-Fuel Video itself proves that a POSA would have had a reasonable expectation of success using an off-board fuel regulator system for a multi-fuel generator. In the video, it shows a successful connection of an off-board fuel regulator system (i.e. a separate propane tank with first and second regulators attached in series) to a dual-fuel generator with a hose. *Id.*, 1:08-7:00.

c) Element [24.3]: a primary pressure regulator

450. Element [24.3] requires "a primary pressure regulator coupled to a service valve of the pressurized fuel source to regulate the fuel supplied from the pressurized fuel source to a reduced pressure." Regarding Element [24.3], both the Workshop Manual, the Tri-Fuel Video, and Parlatore disclose this limitation. *See* §§XII.F.9.e and XII.D.1.e, above; Ex. 1021, 2:01-2:23.

d) Element [24.4] a secondary pressure regulator

451. Element [24.4] requires "a secondary pressure regulator coupled to the primary pressure regulator to regulate the gaseous fuel supplied from the primary pressure regulator to a desired pressure for delivery through the gaseous fuel line to operate the engine." Regarding Element [24.4], both the Workshop

Manual, Parlatore, and the Tri-Fuel Video disclose this limitation. *See* §§XII.F.9.f and XII.D.1.e, above; Ex. 1021, 2:10-2:57.

XIII. CONCLUSION

452. For at least the foregoing reasons, in my opinion, Claims 1-24 of the ’034 Patent are invalid.

* * * * *

I hereby declare under penalty of perjury under the laws of the United States of America that the foregoing is true and correct, and that all statements made of my own knowledge are true and that all statements made on information and belief are believed to be true. I understand that willful false statements and the like are punishable by fine or imprisonment, or both (18 U.S.C. § 1001).

Date: April 29, 2025

Respectfully submitted,

By: _____

Timothy L. Morse, Ph.D., P.E.

Exponent®
Engineering & Scientific Consulting

Timothy Morse, Ph.D., P.E., CFEI

Principal Engineer | Thermal Sciences
Natick
+1-508-652-8525 | tmorse@exponent.com

Professional Profile

Dr. Morse is a licensed professional mechanical engineer who specializes in failure analysis, failure prevention, and design risk assessment for thermal and flow processes, products, and equipment. His project experience includes turbines, compressors, engines, generators, valves, heat exchangers, boilers, furnaces, refrigeration systems, piping systems, heat transfer systems, flammable liquids, cryogenic liquids, consumer products, and medical devices.

Dr. Morse's expertise is used in a variety of litigation matters, and he has experience testifying at both trial and international arbitration. Dr. Morse also has experience with intellectual property matters involving mechanical engineering principles, including medical devices, consumer products, and industrial equipment.

Dr. Morse applies his expertise to the investigation and prevention of fires, explosions, floods, and equipment failures. He has conducted fire origin and cause investigations involving electrical appliances, electrical systems, consumer products, heating appliances, and other combustion equipment. Dr. Morse performs testing and analysis of HVAC systems and components, including the analysis of the production and spread of carbon monoxide. Dr. Morse also investigates the origin and cause of motor vehicle fires, including post-collision fires.

Dr. Morse has performed engineering analysis for the oil and gas industry, ranging from offshore oil and gas extraction facilities to retail motor fuel stations. Dr. Morse has investigated flow-induced vibration issues over a wide range of applications, including heat exchanger tube bundles, pipelines, and offshore structures.

Dr. Morse has extensive experience with power generation equipment and facilities, including nuclear power plants, fossil fuel power plants, and renewable energy. He has investigated failures in heat exchangers, generators, compressors, turbines, and boilers. In the renewable energy area, Dr. Morse has investigated wind turbine failures and wind turbine fires.

Prior to joining Exponent, Dr. Morse was a researcher in the Fluid Dynamics Research Laboratories at Cornell University where he conducted research on the wakes of stationary and oscillating structures in a flow and particularly on how flow-induced vibration due to vortex shedding causes fatigue and failure of structures.

Academic Credentials & Professional Honors

Ph.D., Mechanical Engineering, Cornell University, 2009

M.S., Mechanical Engineering, Cornell University, 2007

© 2025 Exponent, Inc. All Rights Reserved

B.E., Mechanical Engineering, Cooper Union, 2003

National Science Foundation Fellowship, 2004-2008

National Defense Science and Engineering Graduate Fellowship, 2004-2007

Tau Beta Pi Engineering Honor Society, 2002

Pi Tau Sigma Mechanical Engineering Honor Society, 2002

Licenses and Certifications

Professional Engineer Mechanical, California, #35464

Professional Engineer Mechanical, Florida, #83952

Professional Engineer, Kansas, #PE24740

Professional Engineer Mechanical, Massachusetts, #52419

Professional Engineer Chemical and Mechanical, New Hampshire, #13976

Professional Engineer, New York, #110148

Professional Engineer, Pennsylvania, #PE084735

Professional Engineer, Rhode Island, #PE.0011724

Professional Engineer Mechanical, Vermont, #018.0126189

40-Hour Hazardous Waste Operation and Emergency Response Certification (HAZWOPER)

Certified Fire and Explosion Investigator (CFEI)

Professional Affiliations

American Society of Mechanical Engineers

American Clean Power Association

• Wind Technical Standards Committee Member

National Association of Fire Investigators

National Fire Protection Association

• Alternate Member: NFPA Technical Committee on Vehicular Alternative Fuel Systems (VAF-AAA), responsible for NFPA 52: Vehicular Natural Gas Fuel Systems Code.

• Alternate Member: NFPA Technical Committee on Liquified Petroleum Gases (LPG-AAA), responsible for NFPA 58: Liquified Petroleum Gas Code.

Society of Automotive Engineers

Publications

Davies WA, Wolf MI, Barry M, O'Hern SC, Morse TL. The Effect of Valve Closure Time on Water Hammer. ASME 2021 International Mechanical Engineering Congress and Exposition. November 2021. Paper No. 71153.

Morse TL, Cundy M, Kytömaa, HK. Vehicle fires resulting from hot surface ignition of grass and leaves. SAE Technical Paper 2017-01-1354. 2017.

Stern MC, O'Hern SC, Morse TL, Bishop J, Kytömaa HK. Fire risks due to unintentionally energized metal structures. Journal of Fire Sciences. 2017; 35(5):415-426.

Ponchaut NF, Morse TL, Bigham GN, Castro J. Degassing dissolved carbon dioxide. Drilling & Exploration World. January 2017; 26(3):77-84.

Ponchaut NF, Morse TL, Bigham GN, Castro J. Degassing Africa's Lake Kivu for population safety and power generation. Scandinavian Oil-Gas Magazine No. 11/12 2016; 44:26-29.

Morse TL, Ponchaut NF, Bigham GN. Plume modeling in Lake Kivu, Rwanda for a gas extraction facility. Offshore Technology Conference. Houston, TX. June 2016.

Morse TL, Kytömaa HK. The effect of turbulence on the rate of evaporation of LNG on water. Journal of Loss Prevention in the Process Industries 2011; 24:791-797.

Morse TL, Williamson CHK. Steady, unsteady, and transient vortex-induced vibration predicted using controlled motion data. Journal of Fluid Mechanics 2010; 649:429-451.

Morse TL, Williamson CHK. Prediction of vortex-induced vibration response by employing controlled motion. Journal of Fluid Mechanics 2009; 634:5-39.

Morse TL, Williamson CHK. Fluid forcing, wake modes, and transitions for a cylinder undergoing controlled oscillations. Journal of Fluids and Structures 2009; 25(4):697-712.

Morse TL, Williamson CHK. The effect of Reynolds number on the critical mass phenomenon in vortex-induced vibration. Physics of Fluids 2009; 21(4):045105.

Morse TL. Investigating phenomena in vortex-induced vibration of a cylinder using controlled vibration. Ph.D. Thesis, Cornell University, 2008.

Morse TL, Govardhan RN, Williamson CHK. The effect of end conditions on the vortex-induced vibration of cylinders. Journal of Fluids and Structures 2008; 24:1227-1239.

Morse TL, Williamson CHK. Understanding mode transitions in vortex-induced vibration using controlled motion. Proceedings, 9th International Conference on Flow-Induced Vibrations (FIV-2008), Prague, Czech Republic, 2008.

Kysar JW, Gan YX, Morse TL, Chen X, Jones ME. High strain gradient plasticity associated with wedge indentation into face-centered cubic single crystals: Geometrically-necessary dislocation densities. Journal of the Mechanics and Physics of Solids 2007; 55(7):1554-1573.

Morse TL, Williamson CHK. Understanding mode transitions in vortex-induced vibration using controlled vibration. Proceedings, 5th Conference on Bluff Body Wakes and Vortex-Induced Vibration (BBVIV-5), Costa do Sauipe, Brazil, 2007.

Morse TL, Williamson CHK. Employing controlled vibrations to predict fluid forces on a cylinder undergoing vortex-induced vibration. Journal of Fluids and Structures 2006; 22:877-884.

Gan YX, Kysar JW, Morse TL. Cylindrical void in a rigid-ideally plastic single crystal II: Experiments and simulations. International Journal of Plasticity 2006; 22(1):39-72.

Morse TL, Williamson CHK. Employing controlled vibrations to predict fluid forces on a freely vibrating cylinder. Proceedings, 4th Conference on Bluff Body Wakes and Vortex-Induced Vibration (BBVIV-4), Santorini, Greece, 2005.

Presentations and Conference Papers

Morse TL, Wolf MI, Kytömaa HK. Ignition of fuel gas jets from leaks in residential gas piping. International Symposium on Fire Investigation. Orlando, FL, September 2024

Morse TL, Watson H, Buehler C, Kytömaa HK. Ignition due to electrostatic discharge in multi-phase hydrocarbon flows. Mary Kay O'Connor Process Safety Center 2022 International Symposium. College Station, TX, October 2022.

Morse TL, Stern M, Watson H, Buehler C, Kytömaa HK. Experimental evaluation of electrostatic discharge in multi-phase hydrocarbon flows. AIChE Spring Meeting, 18th Global Congress on Process Safety, Houston, TX, April, 2022.

Morse TL, Wolf MI, Davies WA. Residential Fuel Gas Explosions. Oakland County Association of Arson and Fire Investigators, Inc. OCAAFII Quarterly Training. November 2020.

Morse TL, Barry MT. Combining Wind Power with Compressed Air Energy Storage. CleanPower 2020: Stronger Together Virtual Poster Reception. June 2020.

Kytomaa HK, Barry MT, Colella F, Natarajan, S, Lee, K, Morse, TL, Investigating Burn Injuries. AEGIS 2018 Claims Seminar. October 2018.

Morse TL. Wind Turbine Fires and Fire Investigation. Onyx Insight Wind Turbine Technical Symposium. Golden, CO. September 2018.

Morse TL, Colella F, Wolf MI, Barry MT. Space Heater Fires and Fire Investigation. International Symposium on Fire Investigation. Itasca, IL, September 2018.

Morse TL, Sipe JE, Wright SA. Rooftop Solar Fire Investigation. International Symposium on Fire Investigation. Itasca, IL, September 2018.

Morse TL. Plume Modeling in Lake Kivu, Rwanda for a Gas Extraction Facility. Society of Petroleum Engineers (SPE) New York and New England Petroleum Section Invited Lecture Series. Cambridge, MA. November 2017.

Whittlesey R, Morse TL, Morrison A. Analysis of the Relevance of WAF Preparations to Field Mixing Conditions. International Oil Spill Conference. Long Beach, CA. May 2017.

Kane Driscoll SB, Whittlesey R, Hauri J, Kulacki K, Schierz P, Morse T, Morrison A, Yozzo K, McArdle M, Edgington A, Edwards M, Aldea M. The Influence of mixing energy on the concentration and composition of oil in laboratory toxicity tests. Society of Environmental Toxicology and Chemistry. 7th SETAC World Congress. North America 37th Annual Meeting. Orlando, FL, November 2016

Stern MC, O'Hern SC, Morse TL, Bishop J, Kytömaa HK. Fire risks due to unintentionally energized metal structures. Internal Symposium on Fire Investigation, Scottsdale, AZ, October 2016.

Morse TL, Ellison AD, Kytömaa HK. Electrical fault damage to corrugated stainless steel tubing in a house fire. International Symposium on Fire Investigation, University of Maryland, September 2014.

Morse TL, Whittlesey RW. Wind turbine fire origin investigation. International Symposium on Fire Investigation, University of Maryland, September 2014.

Marr KC, Verghese PM, Braff WA, Morse TL. Analysis of arc erosion on thermal switch contacts. International Symposium on Fire Investigation, University of Maryland, September 2014.

Morse TL, Ponchaut NF, Bigham GN. Gas extraction from Lake Kivu: The dynamics of the degassed water plume. World Environmental and Water Resources Congress. Portland, OR. June 2014.

Ellison AD, Morse TL, Kytömaa HK. Lightning related structure fires. International Symposium on Fire Investigation Science and Technology, University of Maryland, October 2012.

Morse TL, Ibarreta AF, Kytömaa HK. Explosions in transformer tanks due to arcing events. AIChE Spring Meeting, 8th Global Congress on Process Safety, Houston, TX, April 2012.

Morse TL, Kytömaa HK. Variations in the evaporation rate of a cryogenic liquid on a water surface. Mary Kay O'Connor Process Safety Center 2010 International Symposium. College Station, TX, October 2010.

Morse TL, Kytömaa HK. The effect of turbulence on the evaporation of cryogenic liquid spills on water. AIChE Spring Meeting, 10th Topical Conference on Natural Gas Utilization, San Antonio, TX, March 2010.

Morse TL, Williamson CHK. Understanding mode transitions in vortex-induced vibration using controlled motion. 9th International Conference on Flow-Induced Vibrations (FIV-2008), Prague, Czech Republic, 2008.

Morse TL, Williamson CHK. Understanding mode transitions in vortex-induced vibration using controlled vibration. 5th Conference on Bluff Body Wakes and Vortex-Induced Vibration (BBVIV-5), Costa do Sauipe, Brazil, 2007.

Morse TL, Williamson CHK. Employing controlled vibrations to predict fluid forces on a freely vibrating cylinder. 4th Conference on Bluff Body Wakes and Vortex-Induced Vibration (BBVIV-4), Santorini, Greece, 2005.

Morse TL, Williamson CHK. An investigation of wake mode transitions and amplitude jumps in vortex-induced vibration using controlled vibration. 60th Annual Meeting of the American Physical Society (APS) Division of Fluid Dynamics, Salt Lake City, UT, 2007.

Morse TL, Williamson CHK. Understanding mode transitions in vortex-induced vibrations of a circular cylinders using controlled vibration. 59th Annual Meeting of the American Physical Society (APS) Division of Fluid Dynamics, Tampa, FL, 2006.

Morse TL, Williamson CHK. Predicting the response of a cylinder undergoing vortex-induced vibration using controlled vibrations. 58th Annual Meeting of the American Physical Society (APS) Division of Fluid Dynamics, Chicago, IL, 2005.

Morse TL, Williamson CHK. Forces on a cylinder with periodic transverse motion in a free stream. 57th Annual Meeting of the American Physical Society (APS) Division of Fluid Dynamics, Seattle, WA, 2004.

Morse TL, Watson H, Buehler C, Kytömaa HK. Ignition due to electrostatic discharge in multi-phase hydrocarbon flows. Mary Kay O'Connor Process Safety Center 2022 International Symposium. College Station, TX, October 2022.

Morse TL, Stern M, Watson H, Buehler C, Kytömaa HK. Experimental evaluation of electrostatic discharge in multi-phase hydrocarbon flows. AIChE Spring Meeting, 18th Global Congress on Process

Safety, Houston, TX, April, 2022.

Book Chapters

Somandepalli V, Morse TL. PIV in combustion systems. Laser Diagnostics in Combustion. Lackner M(ed), Verlag ProcessEng Engineering GmbH, 2009.

Peer Reviews

Journal of Fluid Mechanics

Physics of Fluids

Journal of Fluids and Structures

Journal of Wind Engineering

International Journal of Heat and Fluid Flow

Journal of Loss Prevention in the Process Industries

Energy and Fuels

Nuclear Technology